100% BID SET

REVISIONS

FIRE STATION NO.5

102 W NIBLICK ST; LONGVIEW, TX 75604

1006

OWNER

CITY OF LONGVIEW

300 W. COTTON ST.
LONGVIEW, TX 75601
PHONE: 903-237-1000

CONSULTANTS

CIVIL
KSA Engineering
140 E Tyler St. #600
Longview, TX 75601
T: 903-236-7700
Main Contact: Vice President -
Mike Burns P.E.

LANDSCAPE
Studio 9612
140 E Tyler St. #600
Longview, TX 75601
T: 979-220-8912
Main Contact: Sarai Akin

STRUCTURAL
JQ Engineering
100 Glass Street
Dallas, Texas 75207
T: 214-752-9098
F: 214-752-8771
Main Contact: Mitchell Shope

M.E.P.
KSA Engineering
140 E Tyler St. #600
Longview, TX 75601
T: 903-236-7700
Main Contact: Jim Holland

LOCATION

FIRE STATION NO.5

102 W. NIBLICK ST.
LONGVIEW, TX 75604

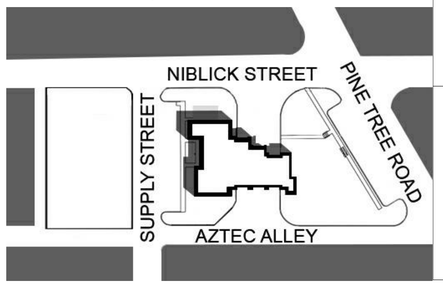

INDEX OF DRAWINGS

06.05.2020

LIFE SAFETY
G-100 PROJECT CRITERIA
G-101 LIFE SAFETY PLANS
G-201 WALL TYPE DETAILS / UL DETAILS

CIVIL
C-100 - DEMOLITION SITE PLAN
C-100 A - EXISTING SITE PLAN
C-101 - PROPOSED SITE PLAN
C-102 - 6" WATERLINE AND 6" SANITARY SEWER PLAN AND PROFILE
C-103 - GRADING PLAN
C-104 - DIMENSIONAL LAYOUT I
C-105 - DIMENSIONAL LAYOUT II
C-106 - JOINT LAYOUT PLAN
C-107 - MISCELLANEOUS DETAILS I
C-108 - MISCELLANEOUS DETAILS II
C-109 - MISCELLANEOUS DETAILS III
C-110 - MISCELLANEOUS DETAILS IV

LANDSCAPE
L100 - TREE PROTECTION PLAN
L101 - LANDSCAPE PLAN
L102 - LANDSCAPE DETAILS
L200 - IRRIGATION PLAN

STRUCTURAL
S- 1.01 - STRUCTURAL NOTES
S- 1.02 - STRUCTURAL NOTES, SYMBOLS, ABBREVIATIONS
S- 1.03 - SPECIAL INSPECTION TABLES
S- 1.04 - SPECIAL INSPECTION TABLES
S- 2.01 - FOUNDATION PLAN
S- 2.02 - LOW ROOF & MEZZANINE FRAMING PLAN
S- 2.03 - APPARATUS BAY & TOWER ROOF FRAMING PLAN
S- 3.01 - TYPICAL CONCRETE DETAILS
S- 3.02 - TYPICAL CONCRETE DETAILS
S- 3.03 - TYPICAL CONCRETE DETAILS
S- 4.01 - TYPICAL MASONRY DETAILS
S- 4.02 - TYPICAL MASONRY DETAILS
S- 5.01 - TYPICAL STEEL DETAILS
S- 5.02 - TYPICAL STEEL DETAILS
S- 5.03 - TYPICAL STEEL DETAILS
S- 5.04 - STEEL SECTIONS & DETAILS
S- 5.05 - STEEL SECTIONS & DETAILS

ARCHITECTURAL
AX-101 FLOOR PLAN - DEMOLITION
AX-111 REFLECTED CEILING PLAN - DEMOLITION
A-001 ARCHITECTURAL SITE PLAN - FOR REFERENCE ONLY
A-002 PHASING PLAN
A-011 GENERATOR ENCLOSURE DETAILS
A-012 ENLARGED SITE PLAN DETAILS
A-013 ENLARGED SITE PLAN DETAILS
A-101 OVERALL FIRST FLOOR PLAN
A-101A FLOOR PLAN - ZONE A
A-101B FLOOR PLAN - ZONE B
A-102 ELEVATED MECH AND TRAINING TOWER PLANS
A-111 OVERALL REFLECTED CEILING PLAN
A-111A REFLECTED CEILING PLAN - ZONE A
A-111B REFLECTED CEILING PLAN - ZONE B
A-113 CEILING DETAILS
A-121 ROOF PLAN
A-131 ENLARGED PLANS
A-132 ENLARGED PLANS
A-141 PLAN DETAILS & SECTIONS
A-151 FURNITURE & EQUIPMENT PLANS + SCHEDULE
A-201 A EXTERIOR ELEVATIONS
A-201 B EXTERIOR ELEVATIONS
A-202 TRAINING TOWER ELEVATIONS
A-221 EXTERIOR SIGNAGE

ARCHITECTURAL
A-301 BUILDING SECTIONS
A-311 WALL SECTIONS
A-312 WALL SECTIONS
A-313 ENLARGED PLAN - CONNECTOR / CANOPY
A-314 WALL SECTIONS - CONNECTOR
A-315 WALL SECTIONS
A-320 TYPICAL ARCHITECTURAL METAL ROOFING SYSTEM DETAILS
A-321 ROOF + VERTICAL DETAILS
A-371 ENLARGED EXTERIOR DETAILS
A-372 ENLARGED EXTERIOR DETAILS
A-373 ENLARGED EXTERIOR DETAILS @ CONNECTOR
A-401 VERTICAL CIRCULATION DETAILS
A-402 VERTICAL CIRCULATION DETAILS
A-501 WINDOW ELEVATIONS
A-511 WINDOW DETAILS
A-512 LOUVER DETAILS

ARCHITECTURAL
A-601 DOOR SCHEDULES & NOTES
A-602 DOOR SCHEDULES & NOTES
A-611 DOOR DETAILS - INTERIOR
A-612 DOOR DETAILS - EXTERIOR

INTERIORS
ID-001 GENERAL FINISH NOTES & ELEVATIONS
ID-101 FIRST FLOOR FINISH PLAN
ID-201 INTERIOR ELEVATIONS
ID-202 INTERIOR ELEVATIONS
ID-203 INTERIOR ELEVATIONS
ID-204 INTERIOR ELEVATIONS
ID-205 INTERIOR ELEVATIONS
ID-206 INTERIOR ELEVATIONS
ID-301 MILLWORK DETAILS
ID-302 MILLWORK DETAILS
ID-303 MILLWORK DETAILS

INTERIORS
ID-304 MILLWORK DETAILS
ID-401 INTERIOR FINISH SCHEDULE
ID-402 INTERIOR FINISH LEGEND
ID-501 INTERIOR SIGNAGE SCHEDULE
ID-502 SIGNAGE INSTALLATION PLAN

MECHANICAL
M-101 - FLOOR PLAN - LEVEL ONE
M-101 - FLOOR PLAN - LEVEL ONE
M-201 - MECHANICAL SCHEDULES
M-202 - MECHANICAL SCHEDULES
M-301 - MECHANICAL DETAILS

ELECTRICAL
E-100 - NOTES AND LEGEND
E-101 - ELECTRICAL SITE PLAN
E-201 - LIGHTING PLAN
E-202 - LIGHTING PLAN

ELECTRICAL
E-203 - LIGHT FIXTURE SCHEDULE AND LIGHTING CONTROL SCHEMATIC
E-301 - POWER PLAN
E-302 - POWER PLAN
E-401 - ONE-LINE DIAGRAM AND SWITCHGEAR ELEVATIONS
E-402 - PANEL SCHEDULES
E-403 - PANEL SCHEDULES
E-501 - DETAILS
E-502 - DETAILS
E-601 - FIRE ALARM PLAN

PLUMBING
P-100 - UNDERFLOOR PLAN - PLUMBING
P-200 - FIRST FLOOR PLAN - PLUMBING
P-300 - PLUMBING SCHEDULES AND LEGEND
P 400 - PLUMBING DETAILS
P-401 - PLUMBING DETAILS
P-500 - PLUMBING RISERS

Architects Design Group
Architects and Planners • Corporate Registration No. BR1177
I.S.K. Reeves V FAIA, AIA • Ian Reeves, AIA • Susan Gantt, AIA, LEED-AP
333 N. Knowles Ave. Winter Park, Florida, 32789 Tel. 407-647-1706 Fax. 407-645-5525

REGISTERED ARCHITECT IAN A. REEVES 22797 STATE OF TEXAS

06.05.2020

SYMBOL AND TAG LEGEND

ROOM 1-100	ROOM TAG
101	DOOR TAG
W 1	EXTERIOR WINDOW SYSTEM
IW 1	INTERIOR WINDOW SYSTEM
L1	CONTINUOUS HORIZONTAL LOUVER
P1	WALL TYPE TAG
DETAIL NUMBER 1 / SHEET NUMBER A-1.00	DETAIL REFERENCE
1 / A-1.00	WALL SECTION REFERENCE
1 / A-1.00	EXTERIOR ELEVATION REFERENCE
1 / A-1.00	BUILDING SECTION REFERENCE
N	NORTH PLAN ARROW
1 / A	COLUMN GRID DESIGNATION
MATCH LINE	DRAWING MATCH LINE
	ELEVATION
9'-0"	CEILING HEIGHT
EXP	CEILING EXPOSED
1	FURNITURE & EQUIPMENT NUMBER
08	DEMOLITION TAG
1	DRAWING REVISION NUMBER
1 / ID-1.00	INTERIOR ELEVATION- MILLWORK DETAILS ARE REFERENCED ON INTERIOR ELEVATIONS

ABBREVIATION LEGEND

ABBREVIATION	MEANING
ABBREV	ABBREVIATIONS
ACC	ACCESSORIES
AL	ALUMINUM
A/C	AIR CONDITIONING
AFF.	ABOVE FINISHED FLOOR
CAB'T.	CABINET
CMU.	CONCRETE MASONRY UNIT
CONC.	CONCRETE
CR	ACCESS CONTROL CARD READER
CW	CURTAINWALL
DIA.	DIAMETER
DWG.	DRAWING
ELEC.	ELECTRICAL
EL / ELEV	ELEVATION
EQUIP. / EQP.	EQUIPMENT
EWC	ELECTRIC WATER COOLER
E.U.	EGRESS UNIT
FD	FLOOR DRAIN
FEC	FIRE EXTINGUISHER CABINET
FE	FIRE EXTINGUISHER
G	METAL LOUVER GATE
GALV.	GALVANIZED
GL	GLAZING
HC	HANDICAPPED
HM	HOLLOW METAL DOOR
LMI	LARGE MISSILE IMPACT
MAINT.	MAINTENANCE
MAX.	MAXIMUM
MECH.	MECHANICAL
MIN.	MINIMUM
M.R.	MOISTURE RESISTANT
MTL.	METAL
MANUF.	MANUFACTURED
N/A	NOT APPLICABLE
N.I.C	NOT IN CONTRACT
O.C	ON CENTER
O.F.	OVERFLOW DRAIN OR SCUPPER
OPP	OPPOSITE HAND
R.D.	ROOF DRAIN
RM.	ROOM
REF.	REFERENCE
REQD.	REQUIRED
SE	SECURITY
SIM.	SIMILAR
STOR.	STORAGE
S.S.	STAINLESS STEEL
STL	STEEL
SC	SOLID CORE WOOD DOOR
T.O.FL. SLAB	TOP OF FLOOR SLAB
TYP.	TYPICAL
TEL.	TELEPHONE
U.N.O.	UNLESS NOTED OTHERWISE
W/	WITH
WH	WATER HEATER

GENERAL PROJECT NOTES

1. GENERAL CONTRACTOR AND SUBCONTRACTORS SHALL PERFORM WORK IN ACCORDANCE WITH ALL APPLICABLE CODES.
2. BEFORE STARTING WORK, EXAMINE THE CIVIL, ARCHITECTURAL, TECHNOLOGY, MECHANICAL, PLUMBING AND ELECTRICAL DRAWINGS AND COORDINATE THE WORK OF EACH SECTION WITH THE WORK OF OTHER TRADES. WHERE INTERFERENCE APPEARS AND DEPARTURES FROM INDICATED ARRANGEMENTS ARE REQUIRED, CONFER WITH TRADES INVOLVED AND COME TO AN AGREEMENT AS TO NECESSARY CHANGES IN LOCATION OF ANY ITEMS AND OBTAIN APPROVAL FROM THE ARCHITECT FOR THE PROPOSED CHANGES.
3. PROMPTLY REPORT TO THE ARCHITECT ANY CONDITIONS AT THE SITE OR IN THE CONTRACT DOCUMENTS THAT WOULD INVOLVE A CONFLICT OR THAT IN GENERAL WOULD MAKE IT IMPOSSIBLE TO CARRY OUT THE WORK AS INDICATED.
4. ALL PLAN DIMENSIONS SHOWN ARE TO FACE OF MASONRY WALL, STUD FRAMING WALL & COLUMN'S CENTERLINES (GRIDLINES).
5. THESE DRAWINGS SHALL NOT BE MEASURED (SCALED) TO OBTAIN ANY DIMENSION. IF A DIMENSION IS MISSING OR IN QUESTION, IT IS THE CONTRACTOR'S RESPONSABILITY TO CONTACT THE ARCHITECT AND/OR ENGINEER FOR A READING ON THE MATTER BEFORE PROCEEDING WITH THE WORK.
6. THE CONTRACTOR SHALL NOTIFY THE ARCHITECT OF ANY AND ALL DISCREPANCIES BETWEEN EXISTING CONDITIONS AND THE CONTRACT DOCUMENTS BEFORE PROCEEDING WITH THAT PORTION OF THE WORK. FAILURE TO NOTIFY THE ARCHITECT WILL NOT RELIEVE THE CONTRACTOR OF RESPONSABILITY TO PERFORM THE WORK AS INTENDED BY THE CONTRACT DOCUMENTS. THE CONTRACTOR SHALL CORRECT ANY AND ALL WORK ARISING FROM SUCH FAILURE TO COORDINATE DISCREPANCIES TO THE SATISFACTION OF THE ARCHITECT.
7. ALL DIMENSIONS & ELEVATIONS TO BE FIELD VERIFIED. DIMENSIONS FOR WINDOWS & DOORS ARE "GENERIC" & USED FOR DESIGN PURPOSES ONLY. GC SHALL VERIFY IN FIELD, ALL WINDOW AND DOOR OPENINGS (EXISTING AND NEW OPENINGS) AND COORDINATE DIMENSIONS WITH THE MANUFACTURER FOR EXACT ROUGH OPENING SIZES. WINDOW AND DOOR INSTALLATION TO BE PER MANUFACTURER'S SPECIFICATIONS.
8. PROVIDE NON-COMBUSTIBLE BLOCKING AS REQUIRED FOR ALL WALL CABINETS, WALL HUNG SINKS, SHELVING STANDARDS, COUNTERTOPS, TOILET ACCESSORIES, AND SUPPORTS PER MANUFACTURERS RECOMMENDATIONS.
9. ALL PARTITION DRYWALL JOINTS SHALL BE MUDDED, TAPED AND SANDED SMOOTH WITH NO VISIBLE JOINTS. LEVEL 4 FINISH. ALL EXTERIOR DRYWALL CORNERS SHALL HAVE SCREWED METAL CORNER BEADS.
10. PROVIDE CAULKING AT INTERSECTION OF ALL DISSIMILAR MATERIALS.
11. REFER TO A-6.00 SERIES FOR DOOR AND FRAME SCHEDULES, ELEVATIONS, AND DETAILS.
12. REFER TO A-5.00 SERIES FOR WINDOW ELEVATIONS AND DETAILS.

OCCUPANT LOAD

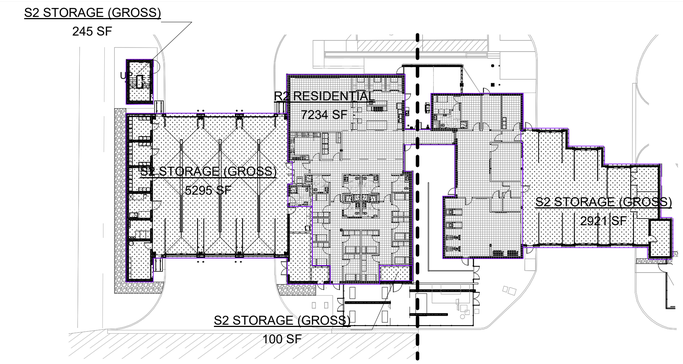

1 FIRST FLOOR-OCCUPANCY PLAN

1/32" = 1'-0"

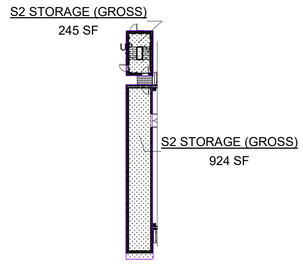

Building Area Legend

- R2 RESIDENTIAL
- S2 STORAGE (GROSS)

2 MEZZANINE-OCCUPANCY PLAN

1/32" = 1'-0"

OCCUPANT LOAD (TABLE 1004.1.2) - MIXED OCCUPANCY

NAME	AREA	OCCUPANT LOAD FACTOR 1004.1.2	USE	OCCUPANT LOAD
FIRST FLOOR				
	Redundant Area	200 SF		
R2 RESIDENTIAL	7234 SF	200 SF	RESIDENTIAL (R2) GROSS	37
S2 STORAGE (GROSS)	5295 SF	300 SF	ACCESSORY OCCUPANCY - STORAGE (S2(GROSS	18
S2 STORAGE (GROSS)	100 SF	300 SF		1
S2 STORAGE (GROSS)	2921 SF	300 SF		10
S2 STORAGE (GROSS)	245 SF	300 SF		1
	15794 SF			67
ELEVATED MECHANICAL				
S2 STORAGE (GROSS)	924 SF	300 SF		4
S2 STORAGE (GROSS)	245 SF	300 SF		1
	1169 SF			5
	16964 SF			72

SCHEDULE OF ALTERNATES

1. **DEDUCT ALTERNATE #1:** PROVIDE CHAIN LINK FENCE AND GATES FOR THE SECURE PARKING.
   BASE BID : PROVIDE MASONRY AND ALUMINUM METAL SCREEN AND METAL CANTILEVER GATES AS SHOWN ON THE BID SET
2. **DEDUCT ALTERNATE #2:** KEEP EXISTING APPARATUS BAY DOORS FOR THE EXISTING APPARATUS ROOM. (BOTH SIDES).
   BASE BID : PROVIDE NEW SECTIONAL DOORS AS SHOWN IN THE DOOR SCHEDULE AND SPECIFICATIONS AND BID SET.
3. **DEDUCT ALTERNATE #3:** PROVIDE SECTIONAL DOORS FOR THE NEW APPARATUS BAY EGRESS SIDE TO MATCH SECTIONAL DOORS SHOWN FOR THE INGRESS OF THE NEW APPARATUS BAY.
   BASE BID : PROVIDE BI-FOLD DOORS PER SPECIFICATIONS AND DOOR SCHEDULE FOR THE EGRESS SIDE OF THE NEW APPARATUS BAY ROOM.
4. **DEDUCT ALTERNATE #4:** KEEP EXISTING CEILING AND LIGHT FIXTURES FOR THE EXISTING APPARATUS BAY ROOM.
   BASE BID : REMOVE EXISTING SUSPENDED CEILING TILES AND GRID, CLEAN AND PAINT EXISTING STRUCTURE AND PROVIDE NEW LIGHT FIXTURE AS SHOWN IN THE BID SET.
5. **DEDUCT ALTERNATE #5:** KEEP EXISTING BRICK AND EXTERIOR SURFACES AS IS.
   BASE BID : EXTERIOR BRICK TO BE PAINTED.

APPLICABLE CODES

2015 INTERNATIONAL ENERGY CODE (IECC)
2012 INTERNATIONAL BUILDING CODE (IBC)
2012 INTERNATIONAL RESIDENTIAL CODE (IRC)
2012 INTERNATIONAL FIRE CODE (IFC)
2012 INTERNATIONAL PLUMBING CODE (IPC)
2012 INTERNATIONAL PROPERTY MAINTENANCE CODE (IPMC)
2012 INTERNATIONAL FUEL GAS CODE (IFGC)
2012 INTERNATIONAL MECHANICAL CODE (IMC)
2017 NATIONAL ELECTRIC CODE (NEC)

PROJECT CRITERIA

OCCUPANCY CLASSIFICATION	**MIXED NON-SEPARATED OCCUPANCY:** (R-2) RESIDENTIAL / (S2)STORAGE / BUSINESS		
OCCUPANCY SEPARATION REQUIREMENT * (INCLUDES EXCEPTION FOR SPRINKLER TABLE IBC 508.4)	1 HR	1 HR	1 HR
TYPE OF CONSTRUCTION			TYPE II B
SPRINKLERED (IN ACCORDANCE WITH SECTION NFPA 903.3.1.1)			YES ■ NO ☐

AREA AND HEIGHT LIMITATIONS (CHAPTER 5)

BUILDING AREA INCLUDES AREA WITHIN SURROUNDING EXTERIOR WALLS

	MAXIMUM ALLOWABLE		PROVIDED
ALLOWABLE BUILDING HEIGHT (IBCTABLE 503)	55'		35' - 6"
ALLOWABLE NUMBER OF STORIES (IBCTABLE 504.4)	(S-2) = 4	(R-2) = 5	2
ALLOWABLE FLOOR AREA (IBCTABLE 503)	(S-2) = 26,000	(R-2) = 16,000 MOST RESTRICTIVE	SEE BELOW
FIRST FLOOR BUILDING AREA	16,000 SF		15,764 SF
MEZZANINE	16,000 SF		924 SF
TOTAL BUILDING AREA			16,688 SF

EGRESS REQUIREMENTS (CHAPTER 10) (PER TABLE IBC 1016.2 EXIT ACCESS TRAVEL DISTANCE AND MOST STRINGENT OCCUPANCY)

	REQUIRED (R-2)	REQUIRED (S-2)	PROVIDED
MAXIMUM TRAVEL DISTANCE TO AN EXIT (PER TABLE 1016.2 EXIT ACCESS TRAVEL DISTANCE AND MOST STRINGENT OCCUPANCY - RESIDENTIAL / SPRINKLED)	250 FEET	400 FEET	81' MAX. (ALSO REFER TO LIFE SAFETY PLAN)
MAXIMUM COMMON PATH OF TRAVEL (PER 1014.3 MOST STRINGENT OCCUPANCY (S - 2 SPRINKLED)	125 FEET	100 FEET	19' MAX. (ALSO REFER TO LIFE SAFETY PLAN)
DEAD END CORRIDOR (PER SECTION 1018.4 DEAD ENDS: EXCEPTION 2)	50 FEET	50 FEET	40' MAX. (ALSO REFER TO LIFE SAFETY PLAN)
MINIMUM NUMBER OF EXITS OR ACCESS TO EXITS PER STORY (PER SECTION 1006.3.1 EXIT OR EXIT ACCESS DOORWAYS REQUIRED)	2		11
MINIMUM CORRIDOR WIDTH (PER TABLE 1018.2 MINIMUM CORRIDOR WIDTH)	44" MINIMUM		60"
MINIMUM STAIRWAY WIDTH [.3 INCHES x (OCCUPANTS / # OF STAIRS)] (SECTION IBC 1009.4)	44" MINIMUM		4'-6"
MINIMUM EXIT DOOR WIDTH (OTHER EGRESS COMPONENTS) (SECTION 1008.1.1) 0.2 INCHES PER OCCUPANT	32" MINIMUM		36" MINIMUM

FIRE PROTECTION REQUIREMENTS (CHAPTERS 5, 6, 7 & 10)

(TYPE II B PROTECTED)	REQUIRED	PROVIDED
* VERTICAL AND HORIZONTAL SEPARATION BETWEEN GROUPS S-2 & R-2 (FIRE BARRIER) (ACCESSORY OCCPANCIES IBCTABLE 508.2) (NON-SEPARATED OCCUPANCIES IBCTABLE 508.3) (SEPARATED OCCUPANCIES PER IBCTABLE 508.4) (INCEDENTAL USES IBCTABLE 509)	1 HOUR	1 HOUR
INTERIOR BEARING WALLS, COLUMNS, BEAMS, GIRDERS, TRUSSES, FLOOR CONSTRUCTION, EXTERIOR BEARING WALLS (PER TABLE IBCTABLE 601: FIRE-RESISTANCE RATING REQUIREMENTS FOR BUILDING ELEMENTS)	0*	0*
SECTION 708 FIRE PARTITIONS IBCTABLE 708.3 DWELLING UNIT AND SLEEPING UNIT SEPARATIONS IN BUILDING OF TYPE IIB, IIIB AND VB CONSTRUCTION SHALL HAVE FIRE-RESISTANCE RATINGS OF NOT LESS THAN 1/2 HOUR IN BUILDINGS EQUIPPED THROUGHOUT WITH AN AUTOMATIC SPRINKLER SYSTEM	1/2 HOUR	1/2 HOUR
SMOKE PARTITIONS (PER IBCTABLE 710)	0	0
CORRIDOR (PER IBCTABLE 1018.1: CORRIDOR FIRE-RESISTANCE RATING. EXCEPTION (#2)	0	0

PLUMBING

(TABLE 403.1 MINIMUM NUMBER OF REQUIRED PLUMBING FIXTURES)

FIXTURE PER PERSON	REQUIRED S-2 (OCCUPANT LOAD= 29) MEN & WOMEN	+	REQUIRED R-2 (CALCULATED PER UNIT) MEN & WOMEN	=	REQUIRED TOTAL MEN & WOMEN	PROVIDED TOTAL
WATER CLOSETS	1 PER 100 = 1		1 PER 10 UNITS = 2		3	8*
LAVATORIES	1 PER 100 = 1		1 PER 10 UNITS = 2		3	8*
UTILITY SINK, MOP SINK	1		1		2	2
SHOWERS/BATH TUBS	---		1 PER 8 UNITS = 2		2	8
DRINKING FOUNTAIN	1 PER 1000 = 1		1		2	2
URINALS	NOT REQUIRED		NOT REQUIRED		NOT REQUIRED	(PER PLUMBING SECTION 419.2) NOT REQUIRED

Architects Design Group

Architects and Planners
I.S.K. Reeves V, F.A.I.A.
Ian A. Reeves, A.I.A.
Susan Gantt A.I.A., LEED-AP

333 N. Knowles Ave.
Winter Park, Florida 32789
(407) 647-1706

Corporate Registration Number: BR1177

REGISTERED ARCHITECT IAN A. REEVES 22797 STATE OF TEXAS
06.05.2020

FIRE STATION NO.5

CITY OF LONGVIEW

100% BID SET

The architect hereby expressly reserves his common law copyright and other property rights in these drawings. These drawings shall not be reproduced without written permission and consent of the architect, nor are they to be assigned to any party without first obtaining written permission and consent.

REVISIONS/ADDENDA

Number	Description	Date Issued

SHEET TITLE:
PROJECT CRITERIA

scale: As indicated
drawn: ADG Dallas
checked: SER, MBV
approved: IAR
date: June 5, 2020

PROJECT NUMBER:
1006

SHEET NUMBER:
G-100

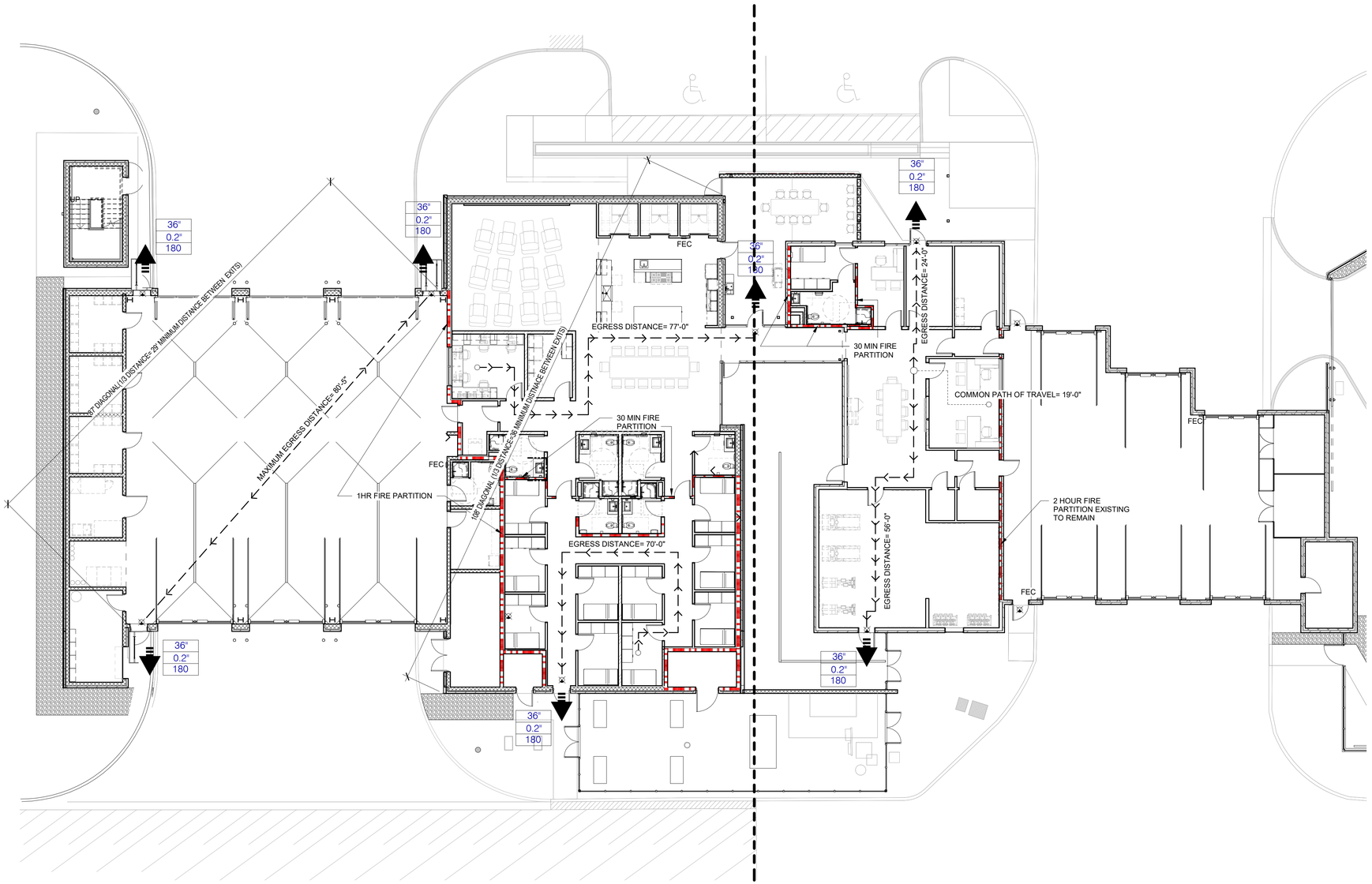

1 LIFE SAFETY PLAN
3/32" = 1'-0"

WALL AND SYMBOL LEGEND

	1 HOUR FIRE RATED WALL
	30 MINUTE RATED WALL
	MAXIMUM TRAVEL DISTANCE TO AN EXIT
	MAXIMUM COMMON PATH OF TRAVEL
FEC	FIRE EXTINGUISHER CABINET (SEMI-RECESSED)
	NOTE: ALL EXTINGUISHERS SHALL BE CONSPICUOUSLY LOCATED AND READILY ACCESSIBLE. THE TOP OF THE EXTINGUISHER SHALL NOT BE MORE THAN 5 ft. ABOVE THE FLOOR AND THE BOTTOM OF THE EXTINGUISHERS NOT BE LESS THAN 4 INCHES ABOVE THE FLOOR. PORTABLE FIRE EXTINGUISHER SHALL BE INSTALLED IN ACCORDANCE WITH CLASSIFICATION, RATING, AND DISTRIBUTION REQUIREMENTS OF NFPA 10. [NFPA 1:13.6.1.1]
	EXIT SIGN
36"	EXIT WIDTH PROVIDED
0.2"	MINIMUM WIDTH PER OCCUPANT
360	MAXIMUM EGRESS CAPACITY
	EXIT DISCHARGE

*THE MINIMUM DISTANCE BETWEEN EXISTS ARE GREATER THAN 1/3 OF THE DIAGONAL DISTANCE OF AREA SERVED.

Architects Design Group

Architects and Planners

I.S.K. Reeves V, F.A.I.A.
Ian A. Reeves, A.I.A.
Susan Gantt A.I.A., LEED-AP

333 N. Knowles Ave.
Winter Park, Florida 32789
(407) 647-1706

Corporate Registration
Number: BR1177

REGISTERED ARCHITECT IAN A. REEVES 22797 STATE OF TEXAS
06.05.2020

FIRE STATION NO.5

CITY OF LONGVIEW

100% BID SET

The architect hereby expressly reserves his common law copyright and other property rights in these drawings. These drawings shall not be reproduced without written permission and consent of the architect, nor are they to be assigned to any party without first obtaining written permission and consent.

REVISIONS/ADDENDA

Number	Description	Date Issued

SHEET TITLE:

LIFE SAFETY PLANS

scale: As indicated
drawn: ADG DALLAS
checked: SB/MBV
approved: SB/MBV
date: June 5, 2020

PROJECT NUMBER:

1006

SHEET NUMBER:

G-101

Design No. U419

July 12, 2018

Nonbearing Wall Ratings — 1, 2, 3 or 4 Hr (See Items 4 & 5 through 5K)

*** Indicates such products shall bear the UL or cUL Certification Mark for jurisdictions employing the UL or cUL Certification (such as Canada), respectively.**

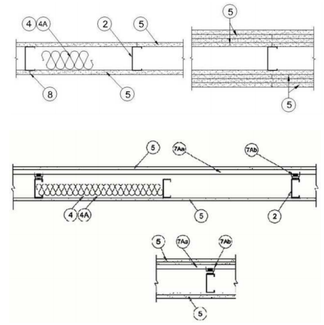

Gypsum Board Protection on Each Side of Wall

Rating, Hr	Min Stud Depth, in. Items 2, 2C, 2D, 2F, 2G, 2O	No. of Layers & Thkns of Panel	Min Thkns of Insulation (Item 4)
1	3-1/2	1 layer, 5/8 in. thick	Optional
1	2-1/2	1 layer, 1/2 in. thick	1-1/2 in.
1	1-5/8	1 layer, 3/4 in. thick	Optional
2	1-5/8	2 layers, 1/2 in. thick	Optional
2	1-5/8	2 layers, 5/8 in. thick	Optional
2	3-1/2	1 layer, 3/4 in. thick	3 in.
3	1-5/8	3 layers, 1/2 in. thick	Optional
3	1-5/8	2 layers, 3/4 in. thick	Optional
3	1-5/8	3 layers, 5/8 in. thick	Optional
4	1-5/8	4 layers, 5/8 in. thick	Optional
4	1-5/8	4 layers, 1/2 in. thick	Optional
4	2-1/2	2 layers, 3/4 in. thick	2 in.

Gypsum Board Protection on Each Side of Wall

Rating, Hr	Min Stud Depth, in. Item 2E	No. of Layers & Thickness of Panel	Min Thkns of Insulation (Item 4)
2	1-5/8	2 layers, 1/2 in. thick	Optional
2	1-5/8	2 layers, 5/8 in. thick	Optional
3	1-5/8	3 layers, 1/2 in. thick	Optional
3	1-5/8	3 layers, 5/8 in. thick	Optional
4	1-5/8	4 layers, 5/8 in. thick	Optional
4	1-5/8	4 layers, 1/2 in. thick	Optional

Gypsum Board Protection on Each Side of Wall

Rating, Hr	Min Stud Depth, in. Items 2 through 2O	No. of Layers & Thkns of Panel	Min Thkns of Insulation (Item 4B)
1	3-5/8	1 layer, 5/8 in. thick	3-1/2 in.
2	3-5/8	2 layers, 5/8 in. thick	Optional
3	3-5/8	3 layers, 5/8 in. thick	Optional
4	3-5/8	4 layers, 5/8 in. thick	Optional

Design No. U905

June 18, 2012

Assembly Rating - 2 h

Load Restricted — Assembly evaluated in accordance with Working Stress Design methods, for use under Limit States Design methods; refer to information under Guide RXUV.

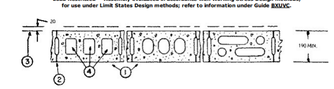

Horizontal Section

Bearing or Nonbearing Wall

* 1. **Concrete Blocks of Various Designs** — (CAZTC). 2 h rating based on noncombustible members framed into wall. Rating is 1 h when combustible members are framed into wall.

BASALITE CONCRETE PRODUCTS VANCOUVER ULC

EXPOCRETE CONCRETE PRODUCTS LTD

GROUPE PERMACON, DIV OF OLDCASTLE BUILDING PRODUCTS CANADA INC ✓

OK BUILDERS SUPPLIES LTD

RONA INC

TRISTAR BRICK & BLOCK LTD

2. **Mortar** — Blocks laid in full bed of mortar, 13 mm thick, of 3 parts of clean and sharp sand to 1 part Portland Cement (proportioned by volume), and 15% hydrated lime (by cement volume). Vertical joints staggered.

3. **Portland, Cement, Stucco or Gypsum Plaster** — Add 1/2 h to Classification if used. Where combustible members are framed in wall, plaster/or stucco must be applied on the face opposite framing to achieve a max Classification of 1-1/2 h.

4. **Loose Masonry Fill** — If all core spaces are filled with loose dry expanded slag, burned clay or shale (Rotary Kiln Process) or water repellent vermiculite masonry fill insulation, add 2 h to Classification.

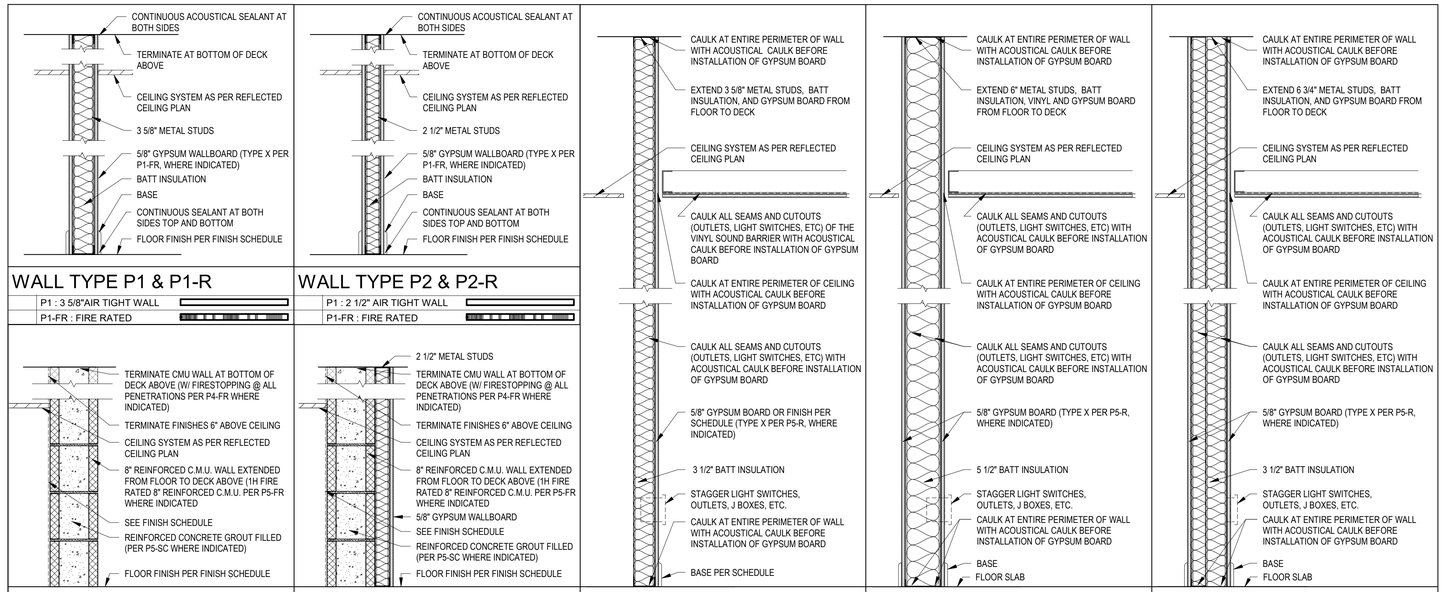

Architects Design Group

Architects and Planners

I.S.K. Reeves V, F.A.I.A.
Ian A. Reeves, A.I.A.
Susan Gantt A.I.A., LEED-AP

333 N. Knowles Ave.
Winter Park, Florida 32789
(407) 647-1706

Corporate Registration Number: BR1177

06.05.2020

FIRE STATION NO.5

CITY OF LONGVIEW

100% BID SET

The architect hereby expressly reserves his common law copyright and other property rights in these drawings. These drawings shall not be reproduced without written permission and consent of the architect, nor are they to be assigned to any party without first obtaining written permission and consent.

REVISIONS/ADDENDA

Number	Description	Date Issued

SHEET TITLE:

WALL TYPE DETAILS / UL DETAILS

scale: As indicated
drawn: ADG DALLAS
checked: SB/MBV
approved: IAR
date: June 5, 2020

PROJECT NUMBER:

1006

SHEET NUMBER:

G-201

!!! CAUTION !!!
EXISTING OVERHEAD UTILITIES IN VICINITY CONTRACTOR SHALL EXERCISE EXTREME CAUTION WHEN WORKING NEAR ELECTRIC FACILITIES

!!! WARNING !!!
THE ENGINEER ASSUMES NO RESPONSIBILITY FOR THE ACCURACY OF THE LOCATION OF UNDERGROUND UTILITIES. THE CONTRACTOR SHALL BE RESPONSIBLE FOR LOCATION AND AVOIDING ALL EXISTING UTILITIES BY CALLING THE "ONE CALL" LOCATOR SERVICE AT 1.800.344.8377 (DIG TESS) OR 1.800.245.4545 TEXAS ONE CALL AT LEAST 48 HOURS PRIOR TO CONSTRUCTION.

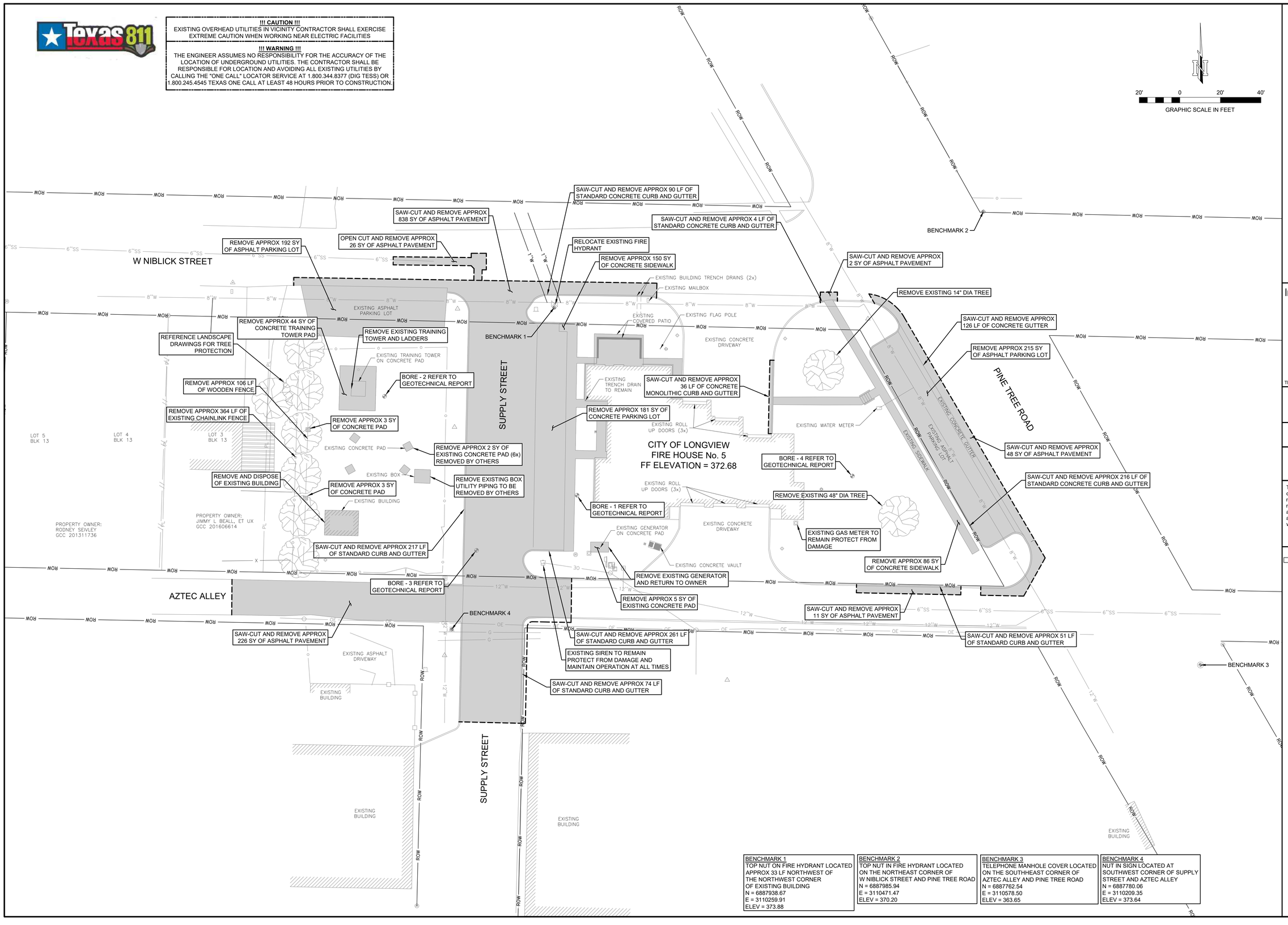

BENCHMARK 1	BENCHMARK 2	BENCHMARK 3	BENCHMARK 4
TOP NUT ON FIRE HYDRANT LOCATED APPROX 33 LF NORTHWEST OF THE NORTHWEST CORNER OF EXISTING BUILDING N = 6887938.67 E = 3110259.91 ELEV = 373.88	TOP NUT IN FIRE HYDRANT LOCATED ON THE NORTHEAST CORNER OF W NIBLICK STREET AND PINE TREE ROAD N = 6887985.94 E = 3110471.47 ELEV = 370.20	TELEPHONE MANHOLE COVER LOCATED ON THE SOUTHEAST CORNER OF AZTEC ALLEY AND PINE TREE ROAD N = 6887762.54 E = 3110578.50 ELEV = 363.65	NUT IN SIGN LOCATED AT SOUTHWEST CORNER OF SUPPLY STREET AND AZTEC ALLEY N = 6887780.06 E = 3110209.35 ELEV = 373.64

Architects Design Group

Architects and Planners
I.S.K. Reeves V, F.A.I.A.
Ian A. Reeves, A.I.A.
Susan Gantt A.I.A., LEED-AP

333 N. Knowles Ave.
Winter Park, Florida 32789
(407) 647-1706

Corporate Registration Number: BR1177

In Association With:

KSA
140 E. Tyler Street, Suite 600
Longview, Texas 75601
T. 903-236-7700 F. 888-224-9418
www.ksaeng.com

TBPE FIRM REGISTRATION NO. F-1356

LONGVIEW FIRE DEPARTMENT No. 5

LONGVIEW, TEXAS

100% BID SET

The architect hereby expressly reserves his common law copyright and other property rights in these drawings. These drawings shall not be reproduced without written permission and consent of the architect, nor are they to be assigned to any party without first obtaining written permission and consent.

REVISIONS/ADDENDA

Number	Description	Date Issued

STATE OF TEXAS
MICHAEL A. BURNS
59990
REGISTERED ARCHITECT
06/5/2020

SHEET TITLE:

DEMOLITION SITE PLAN

scale: 1" = 20'
drawn: P C H
checked: A C L
approved: M A B
date: June 5, 2020
PROJECT NUMBER:

MI.2076

SHEET NUMBER:

C-100

\\ksa-server3\P Drive\Projects\MI2076\008 CAD\30 Sheets\MI2076 - C - LO - DEMO - 0001.dwg

!!! CAUTION !!!
EXISTING OVERHEAD UTILITIES IN VICINITY CONTRACTOR SHALL EXERCISE EXTREME CAUTION WHEN WORKING NEAR ELECTRIC FACILITIES

!!! WARNING !!!
THE ENGINEER ASSUMES NO RESPONSIBILITY FOR THE ACCURACY OF THE LOCATION OF UNDERGROUND UTILITIES. THE CONTRACTOR SHALL BE RESPONSIBLE FOR LOCATION AND AVOIDING ALL EXISTING UTILITIES BY CALLING THE "ONE CALL" LOCATOR SERVICE AT 1.800.344.8377 (DIG TESS) OR 1.800.245.4545 TEXAS ONE CALL AT LEAST 48 HOURS PRIOR TO CONSTRUCTION.

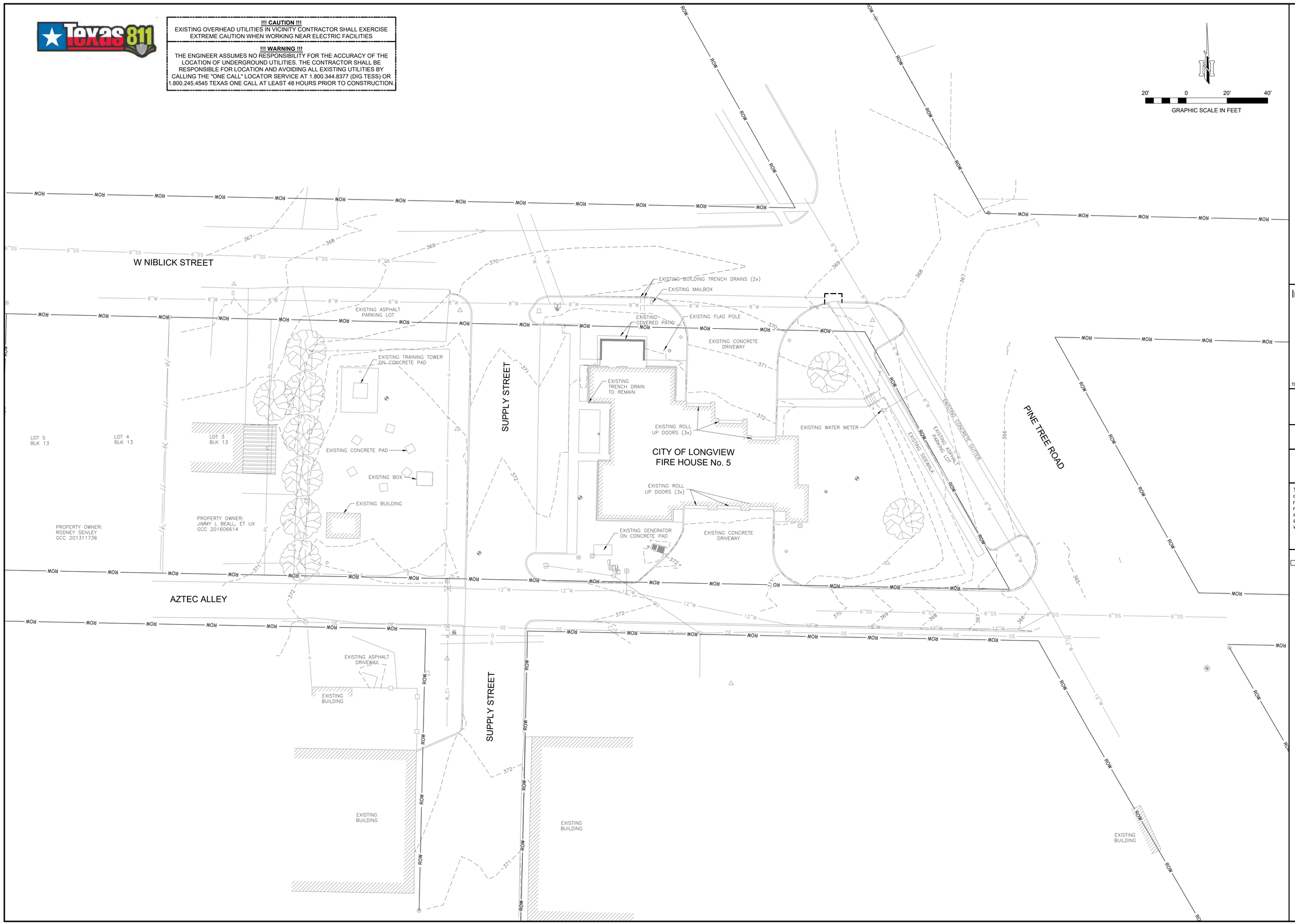

Architects Design Group

Architects and Planners
I.S.K. Reeves V, F.A.I.A.
Ian A. Reeves, A.I.A.
Susan Gantt A.I.A., LEED-AP

333 N. Knowles Ave.
Winter Park, Florida 32789
(407) 647-1706

Corporate Registration Number: BR1177

In Association With:

KSA
140 E. Tyler Street, Suite 600
Longview, Texas 75601
T. 903-236-7700 F. 888-224-9418
www.ksaeng.com

TBPE FIRM REGISTRATION NO. F-1356

LONGVIEW FIRE DEPARTMENT No. 5

LONGVIEW, TEXAS

100% BID SET

The architect hereby expressly reserves his common law copyright and other property rights in these drawings. These drawings shall not be reproduced without written permission and consent of the architect, nor are they to be assigned to any party without first obtaining written permission and consent.

REVISIONS/ADDENDA

Number	Description	Date Issued

STATE OF TEXAS
MICHAEL A. BURNS
59990
LICENSED
ARCHITECT
8/5/2020

SHEET TITLE:

EXISTING SITE PLAN

scale: 1" = 20'
drawn: P C H
checked: A C L
approved: M A B
date: June 5, 2020

PROJECT NUMBER:

MI.2076

SHEET NUMBER:

C-100A

\\ksa-server3\P Drive\Projects\MI2076\008 CAD\30 Sheets\MI2076 - C - LO - SURFACE - 0001.dwg

!!! CAUTION !!!
EXISTING OVERHEAD UTILITIES IN VICINITY CONTRACTOR SHALL EXERCISE EXTREME CAUTION WHEN WORKING NEAR ELECTRIC FACILITIES

!!! WARNING !!!
THE ENGINEER ASSUMES NO RESPONSIBILITY FOR THE ACCURACY OF THE LOCATION OF UNDERGROUND UTILITIES. THE CONTRACTOR SHALL BE RESPONSIBLE FOR LOCATION AND AVOIDING ALL EXISTING UTILITIES BY CALLING THE "ONE CALL" LOCATOR SERVICE AT 1.800.344.8377 (DIG TESS) OR 1.800.245.4545 TEXAS ONE CALL AT LEAST 48 HOURS PRIOR TO CONSTRUCTION.

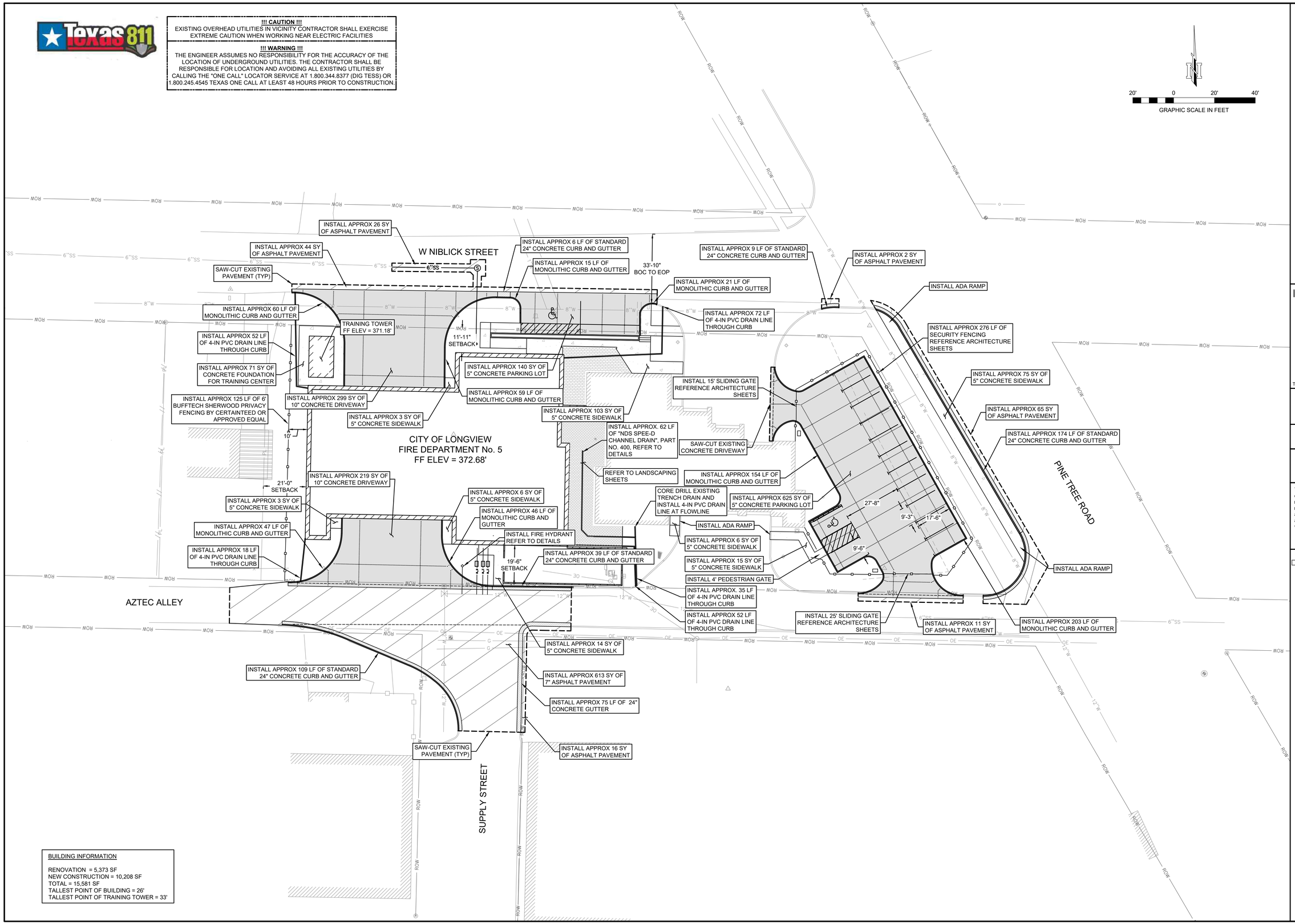

BUILDING INFORMATION

RENOVATION = 5,373 SF
NEW CONSTRUCTION = 10,208 SF
TOTAL = 15,581 SF
TALLEST POINT OF BUILDING = 26'
TALLEST POINT OF TRAINING TOWER = 33'

Architects Design Group

Architects and Planners
I.S.K. Reeves V, F.A.I.A.
Ian A. Reeves, A.I.A.
Susan Gantt A.I.A., LEED-AP

333 N. Knowles Ave.
Winter Park, Florida 32789
(407) 647-1706

Corporate Registration Number: BR1177

In Association With:

KSA
140 E. Tyler Street, Suite 600
Longview, Texas 75601
T. 903-236-7700 F. 888-224-9418
www.ksaeng.com

TBPE FIRM REGISTRATION NO. F-1356

LONGVIEW FIRE DEPARTMENT No. 5

LONGVIEW, TEXAS

100% BID SET

The architect hereby expressly reserves his common law copyright and other property rights in these drawings. These drawings shall not be reproduced without written permission and consent of the architect, nor are they to be assigned to any party without first obtaining written permission and consent.

REVISIONS/ADDENDA

Number	Description	Date Issued

STATE OF TEXAS
MICHAEL A. BURNS
59990
REGISTERED ARCHITECT
06/5/2020

SHEET TITLE:

PROPOSED SITE PLAN

scale: 1" = 20'
drawn: P C H
checked: A C L
approved: M A B
date: June 5, 2020
PROJECT NUMBER:

MI.2076

SHEET NUMBER:

C-101

\\ksa-server3\P Drive\Projects\MI2076\008 CAD\30 Sheets\MI2076 - C - LO - SITE - 0001.dwg

!!! WARNING !!!
THE ENGINEER ASSUMES NO RESPONSIBILITY FOR THE ACCURACY OF THE LOCATION OF UNDERGROUND UTILITIES. THE CONTRACTOR SHALL BE RESPONSIBLE FOR LOCATION AND AVOIDING ALL EXISTING UTILITIES BY CALLING THE "ONE CALL" LOCATOR SERVICE AT 1-800-344-8377 (DIG TESS) OR 1-800-245-4545 TEXAS ONE CALL AT LEAST 48 HOURS PRIOR TO CONSTRUCTION.

WARNING!!!
UNDERGROUND AND OVERHEAD UTILITIES IN AREA. CONTRACTOR TO CONTACT AREA UTILITY REPRESENTATIVE 48 HOURS PRIOR TO EXCAVATION.

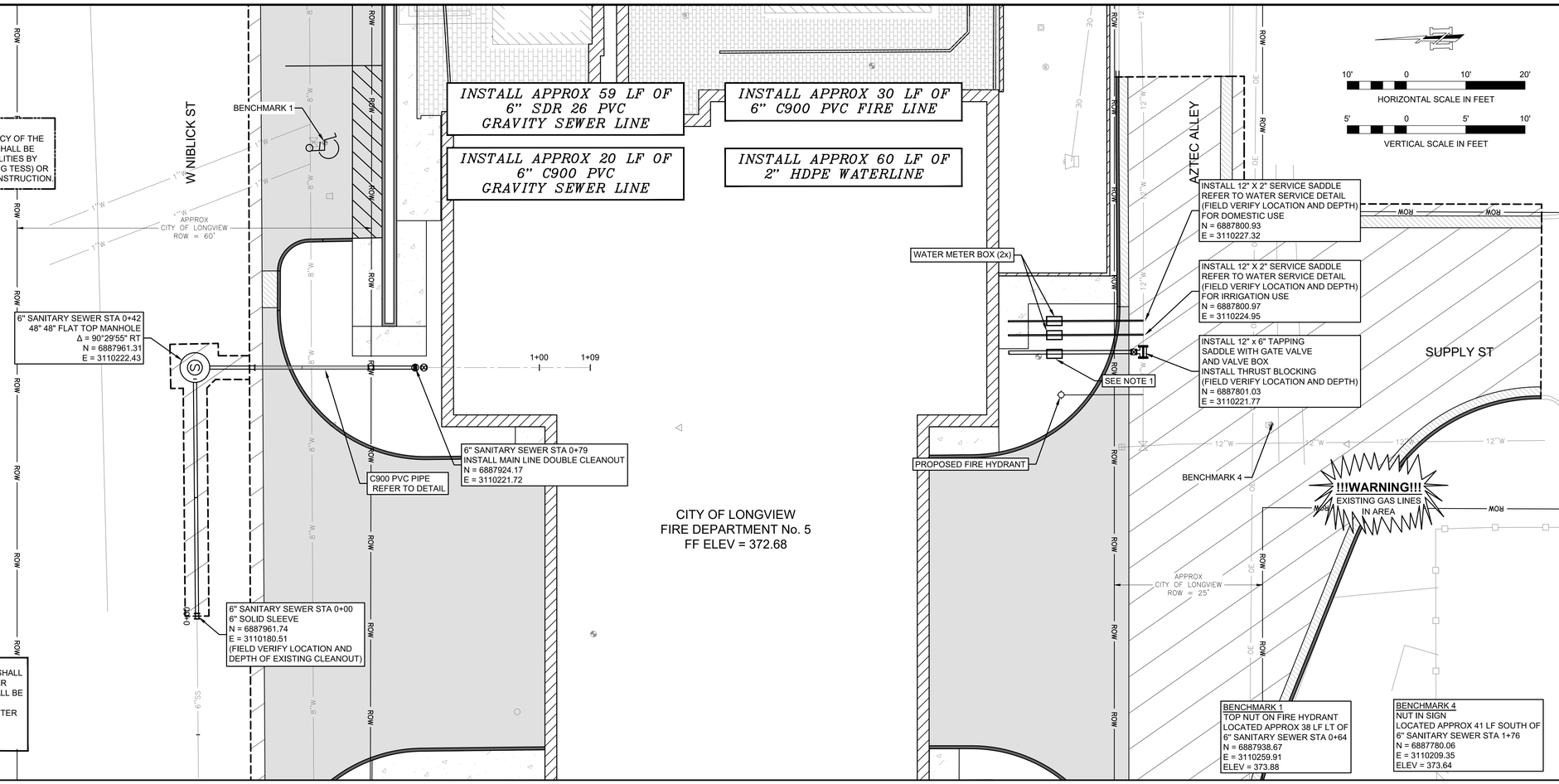

NOTES:
1. CONTRACTOR TO PROVIDE A CITY OF LONGVIEW AND FIRE MARSHALL APPROVED 6" DOUBLE CHECK DETECTOR BACKFLOW PREVENTER SIMILAR TO A ZURN WILKINS 350DA. BACKFLOW PREVENTER SHALL BE LOCATED BELOW GRADE IN A SEALED CONCRETE VAULT WITH ACCESS DOOR TO ALLOW REMOVAL OF THE BACKFLOW PREVENTER AND ACCESS TO THE VAULT. VAULT SHALL BE SIZED TO ALLOW MAINTENANCE AND TESTING OF THE BACKFLOW PREVENTER. PROVIDE SUMP PIT IN ONE CORNER OF THE VAULT.

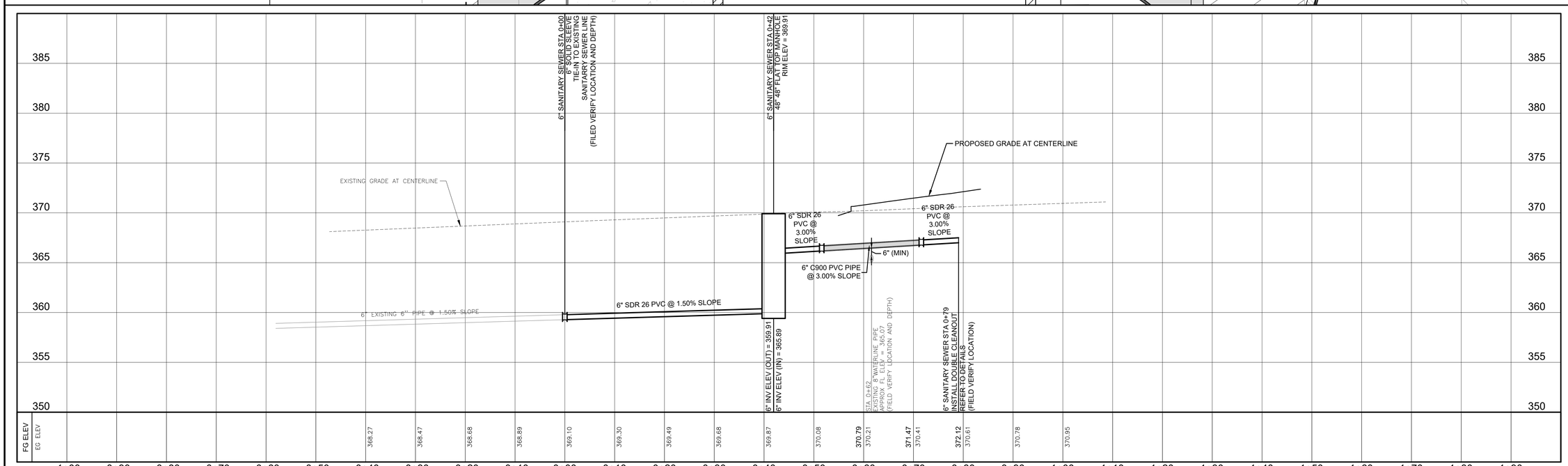

Architects Design Group

Architects and Planners
I.S.K. Reeves V, F.A.I.A.
Ian A. Reeves, A.I.A.
Susan Gantt A.I.A., LEED-AP

333 N. Knowles Ave.
Winter Park, Florida 32789
(407) 647-1706

Corporate Registration
Number: BR1177

In Association With:

KSA
140 E. Tyler Street, Suite 600
Longview, Texas 75601
T. 903-236-7700 F. 888-224-9418
www.ksaeng.com

TBPE FIRM REGISTRATION NO. F-1356

LONGVIEW FIRE DEPARTMENT No. 5

LONGVIEW, TEXAS

100% BID SET

The architect hereby expressly reserves his common law copyright and other property rights in these drawings. These drawings shall not be reproduced without written permission and consent of the architect, nor are they to be assigned to any party without first obtaining written permission and consent.

REVISIONS/ADDENDA

Number	Description	Date Issued

STATE OF TEXAS
MICHAEL A. BURNS
59990
LICENSED
PROFESSIONAL ENGINEER
6/5/2020

SHEET TITLE:

6" WATERLINE AND 6" SANITARY SEWER PLAN AND PROFILE

scale: AS SHOWN
drawn: P C H
checked: A C L
approved: M A B
date: June 5, 2020
PROJECT NUMBER:

MI.2076

SHEET NUMBER:

C-102

\\ksa-server3\P Drive\Projects\MI\2076\008 CAD\30 Sheets\MI2076 - C - PP - SSWR - 0001.dwg

!!! CAUTION !!!
EXISTING OVERHEAD UTILITIES IN VICINITY CONTRACTOR SHALL EXERCISE EXTREME CAUTION WHEN WORKING NEAR ELECTRIC FACILITIES

!!! WARNING !!!
THE ENGINEER ASSUMES NO RESPONSIBILITY FOR THE ACCURACY OF THE LOCATION OF UNDERGROUND UTILITIES. THE CONTRACTOR SHALL BE RESPONSIBLE FOR LOCATION AND AVOIDING ALL EXISTING UTILITIES BY CALLING THE "ONE CALL" LOCATOR SERVICE AT 1.800.344.8377 (DIG TESS) OR 1.800.245.4545 TEXAS ONE CALL AT LEAST 48 HOURS PRIOR TO CONSTRUCTION.

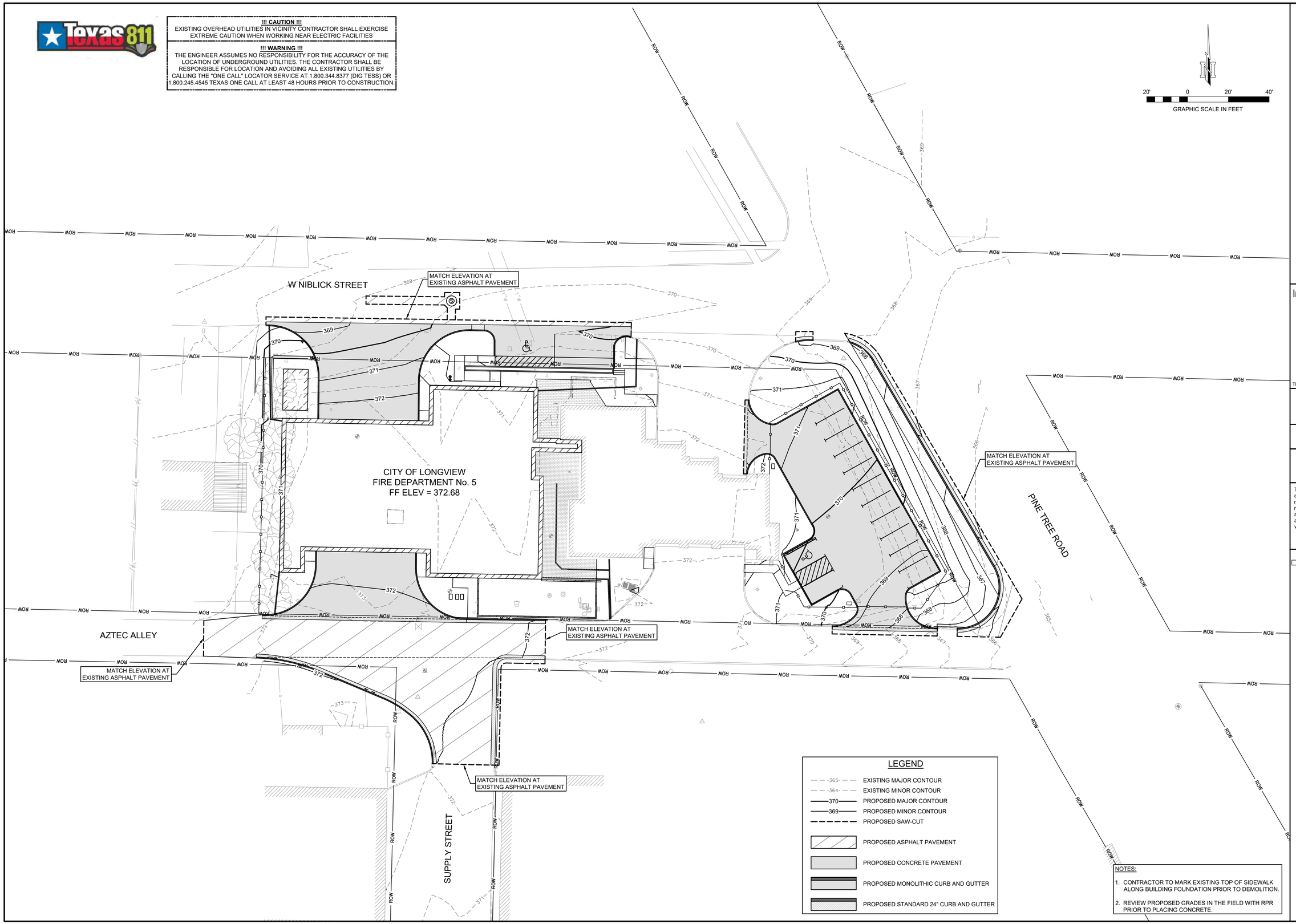

NOTES:

1. CONTRACTOR TO MARK EXISTING TOP OF SIDEWALK ALONG BUILDING FOUNDATION PRIOR TO DEMOLITION.
2. REVIEW PROPOSED GRADES IN THE FIELD WITH RPR PRIOR TO PLACING CONCRETE.

Architects Design Group

Architects and Planners
I.S.K. Reeves V, F.A.I.A.
Ian A. Reeves, A.I.A.
Susan Gantt A.I.A., LEED-AP

333 N. Knowles Ave.
Winter Park, Florida 32789
(407) 647-1706

Corporate Registration Number: BR1177

In Association With:

KSA
140 E. Tyler Street, Suite 600
Longview, Texas 75601
T. 903-236-7700 F. 888-224-9418
www.ksaeng.com

TBPE FIRM REGISTRATION NO. F-1356

LONGVIEW FIRE DEPARTMENT No. 5

LONGVIEW, TEXAS

100% BID SET

The architect hereby expressly reserves his common law copyright and other property rights in these drawings. These drawings shall not be reproduced without written permission and consent of the architect, nor are they to be assigned to any party without first obtaining written permission and consent.

REVISIONS/ADDENDA

Number	Description	Date Issued

STATE OF TEXAS
MICHAEL A. BURNS
59990
LICENSED
PROFESSIONAL ENGINEER
6/5/2020

SHEET TITLE:

GRADING PLAN

scale: 1" = 20'
drawn: P C H
checked: A C L
approved: M A B
date: June 5, 2020

PROJECT NUMBER:

MI.2076

SHEET NUMBER:

C-103

\\ksa-server\SP Drive\Projects\MI2076\008 CAD\30 Sheets\MI2076 - C - LO - GRAD - 0001.dwg

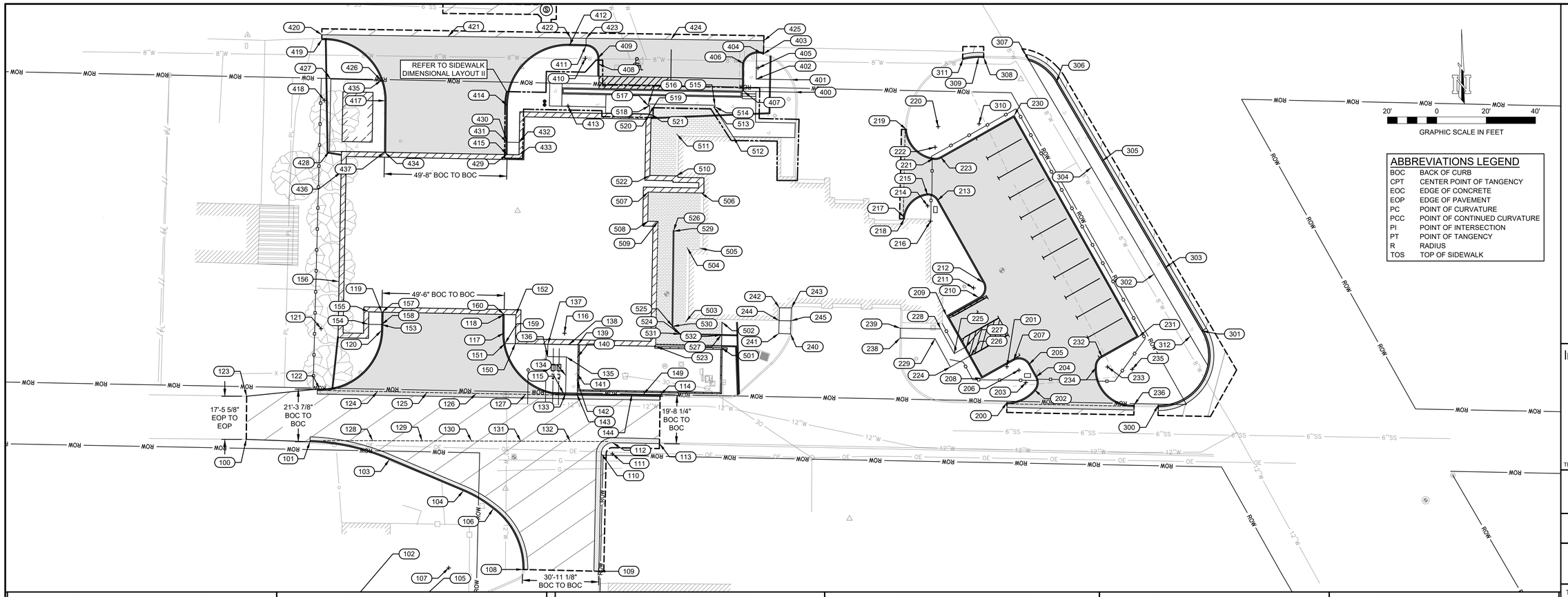

ABBREVIATIONS LEGEND

BOC	BACK OF CURB
CPT	CENTER POINT OF TANGENCY
EOC	EDGE OF CONCRETE
EOP	EDGE OF PAVEMENT
PC	POINT OF CURVATURE
PCC	POINT OF CONTINUED CURVATURE
PI	POINT OF INTERSECTION
PT	POINT OF TANGENCY
R	RADIUS
TOS	TOP OF SIDEWALK

DIMENSIONAL LAYOUT TABLE

POINT NUMBER	ELEVATION	NORTHING	EASTING	DESCRIPTION
100	371.20	6887787.22	3110100.88	EOP (MATCH EXISTING)
101	371.80	6887786.25	3110126.71	PC/BOC
102	N/A	6887698.11	3110123.79	CPT = 88.18'R
103	371.83	6887779.01	3110158.88	PT/BOC
104	372.48	6887766.36	3110188.85	PC/BOC
105	N/A	6887720.30	3110169.39	CPT = 50'R
106	372.44	6887759.11	3110200.91	PCC/BOC
107	N/A	6887735.14	3110182.88	CPT = 30'R
108	372.30	6887734.51	3110212.87	PT/BOC (MATCH EXISTING)
109	372.16	6887733.79	3110243.67	PI/EOC (MATCH EXISTING)
110	372.35	6887781.44	3110244.64	PC/EOC
111	N/A	6887781.35	3110249.14	CPT = 4.5'R
112	372.34	6887785.85	3110249.23	PT/EOC
113	372.17	6887785.48	3110268.22	PI/EOC (MATCH EXISTING)
114	372.46	6887805.17	3110268.48	PI/BOC (MATCH EXISTING)
115	372.00	6887805.68	3110229.38	PC/BOC
116	N/A	6887830.18	3110229.75	CPT = 24.5'R
117	373.01	6887830.25	3110205.25	PT/BOC
118	372.62	6887837.75	3110205.34	TOS
119	372.62	6887838.68	3110155.79	TOS
120	372.82	6887831.30	3110155.67	PC/BOC
121	N/A	6887832.05	3110131.18	CPT = 24.5'R
122	371.70	6887807.56	3110130.63	PT/BOC
123	371.10	6887804.68	3110101.04	EOP (MATCH EXISTING)
124	371.31	6887806.60	3110154.06	GUTTER
125	371.35	6887806.21	3110174.05	GUTTER
126	371.41	6887805.83	3110194.05	GUTTER
127	371.48	6887805.44	3110214.05	GUTTER
128	371.37	6887786.67	3110152.08	GUTTER
129	371.45	6887786.60	3110172.08	GUTTER
130	371.53	6887786.54	3110192.08	GUTTER
131	371.60	6887786.47	3110212.08	GUTTER
132	371.71	6887786.40	3110232.08	GUTTER

DIMENSIONAL LAYOUT TABLE

POINT NUMBER	ELEVATION	NORTHING	EASTING	DESCRIPTION
133	372.01	6887805.64	3110230.22	TOS/BOC
134	372.25	6887813.12	3110230.30	TOS
135	372.50	6887820.61	3110230.51	PI/TOS
136	372.55	6887820.75	3110222.94	PI/TOS
137	372.60	6887825.72	3110223.04	PI/TOS
138	372.61	6887825.57	3110231.54	TOS
139	372.62	6887825.51	3110235.10	PI/TOS
140	372.48	6887820.53	3110235.01	TOS
141	372.30	6887813.84	3110234.88	TOS
142	372.23	6887811.19	3110234.83	TOS
143	372.08	6887805.60	3110234.72	TOS/BOC
144	372.41	6887805.39	3110257.07	BOC
149	372.48	6887805.31	3110261.56	BOC
150	372.58	6887825.99	3110209.87	TOS
151	372.58	6887826.03	3110205.62	TOS
152	372.63	6887837.60	3110210.03	TOS
153	372.58	6887833.70	3110155.70	TOS
154	372.58	6887833.80	3110150.43	PI/TOS
155	372.62	6887838.84	3110150.52	PI/TOS
156	371.01	6887851.15	3110138.33	GROUND LEVEL
157	373.18	6887838.69	3110155.82	BOC
158	372.94	6887833.69	3110155.72	BOC
159	372.90	6887826.02	3110205.60	BOC
160	373.18	6887837.78	3110205.30	BOC
200	369.75	6887802.12	3110408.95	PC/BOC (MATCH EXISTING)
201	N/A	6887816.64	3110408.92	CPT = 14.52'R
202	369.67	6887807.33	3110420.06	PCC/BOC
203	369.77	6887810.22	3110416.61	CPT = 4.5'R
204	369.68	6887812.39	3110420.55	PT/BOC
205	369.85	6887817.44	3110417.76	PC/BOC
206	N/A	6887815.26	3110413.82	CPT = 4.5'R
207	370.01	6887819.19	3110411.61	PT/BOC
208	370.22	6887811.97	3110398.76	PI/BOC

DIMENSIONAL LAYOUT TABLE

POINT NUMBER	ELEVATION	NORTHING	EASTING	DESCRIPTION
209	370.64	6887837.28	3110384.53	PI/BOC
210	370.49	6887844.63	3110397.61	PC/BOC
211	N/A	6887848.55	3110395.40	CPT = 4.5'R
212	370.47	6887850.75	3110399.33	PT/BOC
213	371.69	6887883.92	3110380.70	PC/BOC
214	N/A	6887881.78	3110376.85	CPT = 4.41'R
215	371.96	6887886.19	3110376.81	PCC/BOC
216	N/A	6887875.61	3110378.00	CPT = 10.65'R
217	372.57	6887877.09	3110367.46	PT/BOC
218	372.10	6887876.52	3110367.44	PI/BOC
219	371.22	6887912.73	3110368.22	PC/BOC
220	N/A	6887913.86	3110381.07	CPT = 12.9'R
221	371.70	6887901.07	3110379.39	PCC/BOC
222	N/A	6887905.54	3110379.85	CPT = 4.5'R
223	371.74	6887901.62	3110382.05	PT/BOC
224	370.33	6887816.51	3110386.02	PI/TOS
225	370.30	6887821.98	3110387.60	PI/TOS
226	369.87	6887821.10	3110394.20	FOC/TOS
227	369.93	6887824.59	3110392.24	FOC/TOS
228	371.05	6887831.93	3110382.20	PI/TOS
229	371.06	6887827.98	3110379.80	PI/TOS
230	371.27	6887918.37	3110411.88	PI/BOC
231	369.27	6887828.75	3110462.23	PI/BOC
232	369.11	6887820.46	3110447.48	PC/BOC
233	N/A	6887816.54	3110449.68	CPT = 4.5'R
234	368.91	6887816.50	3110445.18	PCC/BOC
235	N/A	6887815.57	3110459.64	CPT = 14.49'R
236	367.27	6887801.09	3110460.39	PT/BOC (MATCH EXISTING)
238	371.73	6887828.24	3110365.69	FOC/TOS/MATCH EXISTING
239	371.86	6887832.24	3110365.77	FOC/TOS/MATCH EXISTING
240	372.35	6887829.94	3110321.28	PI/TOS
241	372.40	6887830.11	3110316.54	PI/TOS
242	372.67	6887840.52	3110316.80	PI/TOS

DIMENSIONAL LAYOUT TABLE

POINT NUMBER	ELEVATION	NORTHING	EASTING	DESCRIPTION
243	372.67	6887840.48	3110321.66	PI/TOS
244	372.48	6887835.31	3110316.67	ADA RAMP
245	372.49	6887835.21	3110321.47	ADA RAMP
300	366.81	6887801.02	3110470.21	TOS/BOC (MATCH EXISTING)
301	366.23	6887831.13	3110487.85	TOS/BOC (MATCH EXISTING)
302	366.83	6887854.16	3110468.56	TOS
303	366.73	6887856.69	3110472.87	TOS/BOC
304	367.69	6887897.41	3110443.21	TOS
305	367.59	6887899.93	3110447.52	TOS/BOC
306	368.19	6887931.64	3110428.93	TOS/BOC (MATCH EXISTING)
307	367.98	6887940.58	3110417.94	TOS/BOC (MATCH EXISTING)
308	368.79	6887941.84	3110399.52	PI/BOC (MATCH EXISTING)
309	368.62	6887941.89	3110397.52	PC/BOC
310	N/A	6887915.03	3110397.64	CPT = 26.86'R
311	369.30	6887941.10	3110391.14	PT/BOC (MATCH EXISTING)
312	366.33	6887829.03	3110483.29	TOS/BOC (MATCH EXISTING)
400	370.83	6887927.83	3110323.11	TOS (MATCH EXISTING)
401	370.84	6887932.86	3110321.49	TOS (MATCH EXISTING)
402	370.80	6887933.13	3110307.40	TOS
403	370.41	6887943.32	3110310.22	PI/BOC (MATCH EXISTING)
404	370.41	6887943.51	3110309.61	PC/BOC
405	N/A	6887937.64	3110308.10	CPT = 6'R
406	370.56	6887939.39	3110302.31	PI/BOC
407	370.67	6887928.22	3110302.31	PI/BOC/TOS
408	370.79	6887939.33	3110243.23	BOC/PI
409	370.75	6887941.59	3110243.23	PC/BOC
410	N/A	6887941.58	3110238.23	CPT = 5'R
411	370.60	6887946.58	3110238.45	PT/BOC
412	370.71	6887946.74	3110231.77	PC/BOC
413	N/A	6887922.24	3110231.17	CPT = 24.5'R
414	372.19	6887922.42	3110206.67	PT/BOC
415	372.65	6887902.60	3110206.56	TOS
417	371.30	6887924.40	3110157.06	PC/BOC

DIMENSIONAL LAYOUT TABLE

POINT NUMBER	ELEVATION	NORTHING	EASTING	DESCRIPTION
418	N/A	6887924.57	3110132.52	CPT = 24.5'R
419	368.58	6887949.09	3110131.48	PT/BOC
420	368.06	6887951.09	3110131.49	EOC
421	369.24	6887950.41	3110182.57	EOC
422	370.37	6887949.75	3110232.32	EOC
423	370.26	6887949.67	3110238.51	EOC
424	370.12	6887949.21	3110272.91	EOC
425	369.91	6887948.71	3110310.48	EOC
426	371.15	6887932.62	3110155.52	PI/TOS
427	370.95	6887933.15	3110135.15	PI/TOS
428	370.98	6887903.96	3110134.60	PI/TOS
429	373.18	6887902.60	3110206.52	BOC
430	372.40	6887907.57	3110206.59	TOS
431	372.93	6887907.58	3110206.54	BOC
432	372.40	6887907.48	3110211.42	TOS
433	372.65	6887902.48	3110211.33	TOS
434	373.18	6887903.53	3110156.89	BOC
435	370.71	6887932.71	3110155.66	BOC
436	371.00	6887895.42	3110139.22	GROUND LEVEL
437	371.18	6887903.56	3110156.84	TOS
501	372.25	6887824.30	3110293.35	PI/EOC
502	372.35	6887834.68	3110293.54	PI/EOC
503	372.45	6887834.91	3110278.86	PI/EOC
504	372.57	6887864.79	3110279.45	PI/EOC
505	372.60	6887864.64	3110284.65	PI/EOC
506	372.61	6887887.01	3110285.09	PI/EOC
507	372.65	6887887.42	3110263.71	PI/EOC
508	372.59	6887875.57	3110263.49	PI/EOC
509	372.57	6887875.49	3110267.66	PI/EOC
510	372.65	6887893.91	3110275.03	PI/EOC
511	372.61	6887910.84	3110275.26	PI/EOC
512	372.67	6887909.78	3110298.13	PI/EOC/TOS
513	372.51	6887921.87	3110290.15	PI/EOC\TOS

DIMENSIONAL LAYOUT TABLE

POINT NUMBER	ELEVATION	NORTHING	EASTING	DESCRIPTION
514	372.50	6887921.88	3110290.70	PI/EOC/TOS
515	372.50	6887922.56	3110290.68	PI/EOC/TOS
516	372.45	6887923.07	3110263.69	PI/EOC/TOS
517	372.45	6887922.41	3110263.66	PI/EOC/TOS
518	372.51	6887922.39	3110264.21	PI/EOC/TOS
519	572.52	6887919.07	3110264.14	PI/EOC/TOS
520	372.52	6887918.90	3110264.15	PI/EOC
521	372.53	6887918.88	3110264.83	PI/EOC
522	372.65	6887894.13	3110264.36	PI/EOC
523	372.30	6887824.83	3110266.77	PI/EOC
524	372.27	6887829.85	3110276.57	TOP OF DRAIN ELEVATION
525	372.29	6887833.05	3110273.49	TOP OF DRAIN ELEVATION
526	372.45	6887871.73	3110273.95	TOP OF DRAIN ELEVATION
527	372.20	6887829.53	3110293.29	TOP OF DRAIN ELEVATION
529	372.14	6887871.52	3110273.95	FLOWLINE OF DRAIN
530	371.98	6887833.00	3110273.52	FLOWLINE OF DRAIN
531	371.96	6887829.85	3110276.58	FLOWLINE OF DRAIN
532	371.89	6887829.52	3110293.29	FLOWLINE OF DRAIN

Architects Design Group

Architects and Planners

I.S.K. Reeves V, F.A.I.A.
Ian A. Reeves, A.I.A.
Susan Gantt A.I.A., LEED-AP

333 N. Knowles Ave.
Winter Park, Florida 32789
(407) 647-1706

Corporate Registration Number: BR1177

In Association With:

KSA

140 E. Tyler Street, Suite 600
Longview, Texas 75601
T. 903-236-7700 F. 888-224-9418
www.ksaeng.com

TBPE FIRM REGISTRATION NO. F-1356

LONGVIEW FIRE DEPARTMENT No. 5

LONGVIEW, TEXAS

100% BID SET

The architect hereby expressly reserves his common law copyright and other property rights in these drawings. These drawings shall not be reproduced without written permission and consent of the architect, nor are they to be assigned to any party without first obtaining written permission and consent.

REVISIONS/ADDENDA

Number	Description	Date Issued

THE STATE OF TEXAS
MICHAEL A. BURNS
59990
LICENSED
ARCHITECT
06/5/2020

SHEET TITLE:

DIMENSIONAL LAYOUT I

scale: 1" = 20'
drawn: P C H
checked: A C L
approved: M A B
date: June 5, 2020

PROJECT NUMBER:

MI.2076

SHEET NUMBER:

C-104

\\ksa-server3\P Drive\Projects\MI2076\008 CAD\30 Sheets\MI2076 - C - LO - DCTRL - 0001.dwg

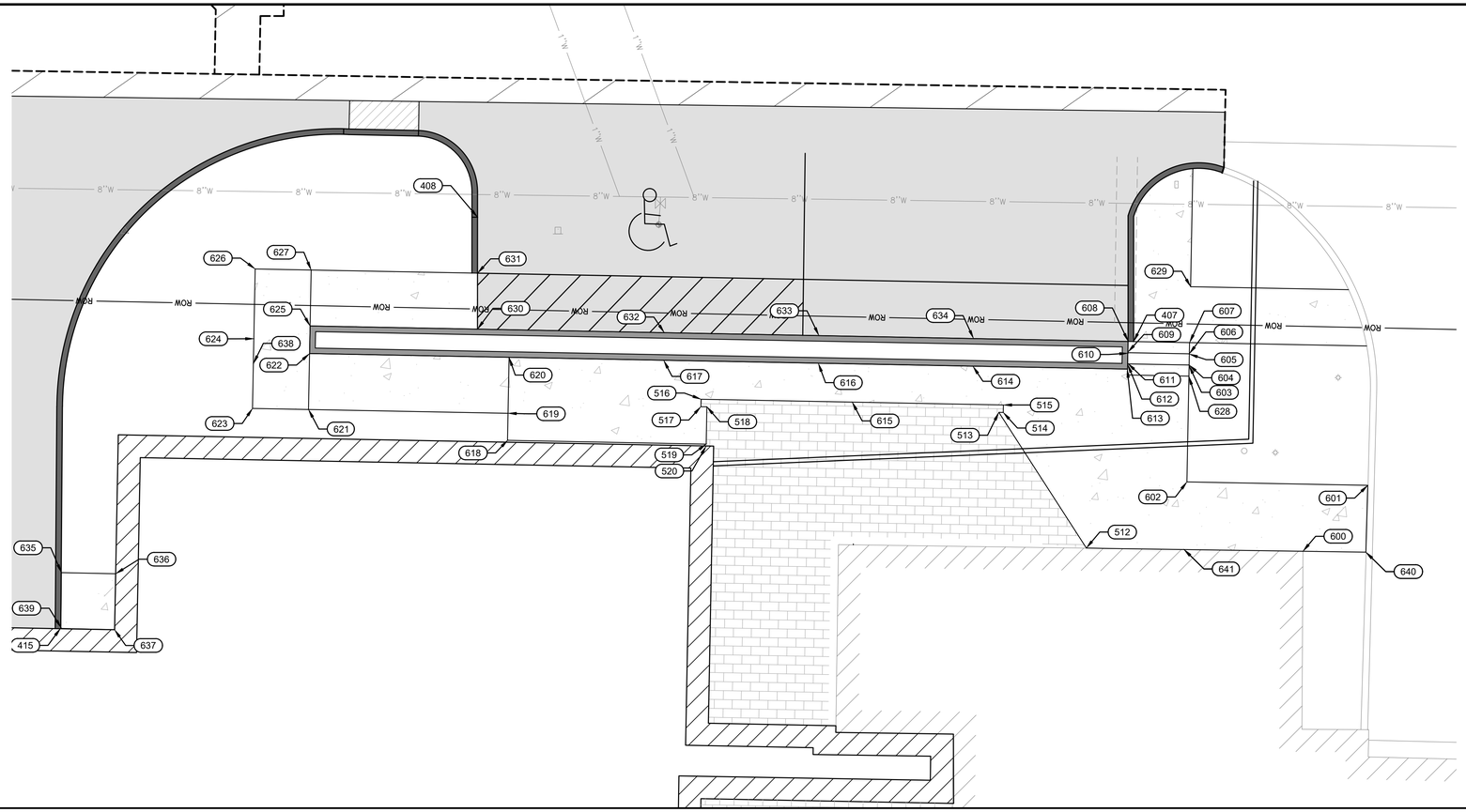

6' 0 6' 12'

GRAPHIC SCALE IN FEET

ABBREVIATIONS LEGEND	
BOC	BACK OF CURB
CPT	CENTER POINT OF TANGENCY
EOC	EDGE OF CONCRETE
EOP	EDGE OF PAVEMENT
PC	POINT OF CURVATURE
PCC	POINT OF CONTINUED CURVATURE
PI	POINT OF INTERSECTION
PT	POINT OF TANGENCY
R	RADIUS
TOS	TOP OF SIDEWALK

DIMENSIONAL LAYOUT TABLE

POINT NUMBER	ELEVATION	NORTHING	EASTING	DESCRIPTION
407	370.67	6887928.22	3110302.31	PI/BOC/TOS
408	370.29	6887939.33	3110243.73	EOC
415	373.18	6887902.60	3110206.50	PI/BOC
512	372.67	6887909.78	3110298.09	PI/EOC/TOS
513	372.51	6887921.90	3110290.28	PI/EOC/TOS
514	372.51	6887921.89	3110290.67	PI/EOC/TOS
515	372.50	6887922.56	3110290.68	PI/EOC/TOS
516	372.45	6887923.07	3110263.69	PI/EOC/TOS
517	372.45	6887922.40	3110263.67	PI/EOC/TOS
518	372.51	6887922.39	3110264.21	PI/EOC/TOS
519	372.52	6887919.06	3110264.15	PI/EOC/TOS
520	372.52	6887918.89	3110264.14	PI/EOC
600	372.45	6887909.49	3110317.43	TOS
601	371.68	6887915.38	3110323.21	TOS/BOC (MATCH EXISTING)
602	372.58	6887915.69	3110307.07	TOS
603	371.87	6887926.08	3110307.26	TOS AT STEP
604	371.28	6887926.13	3110307.26	TOS AT STEP
605	371.28	6887927.11	3110307.28	TOS AT STEP
606	370.68	6887927.13	3110307.28	TOS AT STEP
607	370.68	6887928.12	3110307.30	TOS AT STEP
608	370.68	6887928.24	3110301.82	TOS AT STEP
609	370.68	6887927.28	3110301.80	TOS AT STEP

DIMENSIONAL LAYOUT TABLE

POINT NUMBER	ELEVATION	NORTHING	EASTING	DESCRIPTION
610	371.28	6887927.18	3110301.80	TOS AT STEP
611	371.28	6887926.28	3110301.78	TOS AT STEP
612	371.87	6887926.18	3110301.78	TOS AT STEP
613	372.46	6887925.76	3110301.74	TOS
614	372.45	6887926.02	3110287.97	TOS
615	372.47	6887922.82	3110277.18	TOS
616	372.42	6887926.28	3110274.16	TOS
617	372.40	6887926.54	3110260.35	TOS
618	372.40	6887919.42	3110246.43	TOS
619	372.37	6887921.81	3110246.45	TOS
620	372.37	6887926.80	3110246.55	TOS
621	371.12	6887922.15	3110228.64	TOS
622	371.14	6887927.14	3110228.72	TOS
623	371.06	6887922.25	3110223.64	TOS
624	371.08	6887928.48	3110223.76	TOS
625	371.10	6887929.63	3110228.77	TOS
626	371.10	6887934.71	3110223.88	TOS
627	371.10	6887934.61	3110228.88	TOS
628	372.46	6887925.13	3110307.24	TOS
629	370.80	6887933.12	3110307.40	TOS
630	370.48	6887929.33	3110243.73	TOS/EOP
631	370.38	6887934.33	3110243.74	TOS/EOP

DIMENSIONAL LAYOUT TABLE

POINT NUMBER	ELEVATION	NORTHING	EASTING	DESCRIPTION
632	370.38	6887929.03	3110260.40	EOP
633	370.31	6887928.76	3110274.21	EOP
634	370.24	6887928.50	3110288.01	EOP
635	372.40	6887907.58	3110206.58	PI/TOS
636	372.40	6887907.48	3110211.42	PI/TOS
637	372.65	6887902.48	3110211.33	TOS
638	371.08	6887926.25	3110223.72	TOS
639	372.65	6887902.64	3110206.56	TOS
640	371.93	6887909.41	3110323.04	TOS/BOC (MATCH EXISTING)
641	372.67	6887909.65	3110306.81	TOS

Architects Design Group

Architects and Planners

I.S.K. Reeves V, F.A.I.A.
Ian A. Reeves, A.I.A.
Susan Gantt A.I.A., LEED-AP

333 N. Knowles Ave.
Winter Park, Florida 32789
(407) 647-1706

Corporate Registration
Number: BR1177

In Association With:

KSA

140 E. Tyler Street, Suite 600
Longview, Texas 75601
T. 903-236-7700 F. 888-224-9418
www.ksaeng.com

TBPE FIRM REGISTRATION NO. F-1356

LONGVIEW FIRE DEPARTMENT No. 5

LONGVIEW, TEXAS

100% BID SET

The architect hereby expressly reserves his common law copyright and other property rights in these drawings. These drawings shall not be reproduced without written permission and consent of the architect, nor are they to be assigned to any party without first obtaining written permission and consent.

REVISIONS/ADDENDA

Number	Description	Date Issued

STATE OF TEXAS
MICHAEL A. BURNS
59990
LICENSED
PROFESSIONAL ENGINEER
06/5/2020

SHEET TITLE:

DIMENSIONAL LAYOUT II

scale: 1" = 20'
drawn: P C H
checked: A C L
approved: M A B
date: June 5, 2020

PROJECT NUMBER:

MI.2076

SHEET NUMBER:

C-105

\\kasa-server3\P Drive\Projects\MI2076\008 CAD\30 Sheets\MI2076 - C - LO - DCTRL - 0002.dwg

!!! CAUTION !!!
EXISTING OVERHEAD UTILITIES IN VICINITY CONTRACTOR SHALL EXERCISE EXTREME CAUTION WHEN WORKING NEAR ELECTRIC FACILITIES

!!! WARNING !!!
THE ENGINEER ASSUMES NO RESPONSIBILITY FOR THE ACCURACY OF THE LOCATION OF UNDERGROUND UTILITIES. THE CONTRACTOR SHALL BE RESPONSIBLE FOR LOCATION AND AVOIDING ALL EXISTING UTILITIES BY CALLING THE "ONE CALL" LOCATOR SERVICE AT 1.800.344.8377 (DIG TESS) OR 1.800.245.4545 TEXAS ONE CALL AT LEAST 48 HOURS PRIOR TO CONSTRUCTION.

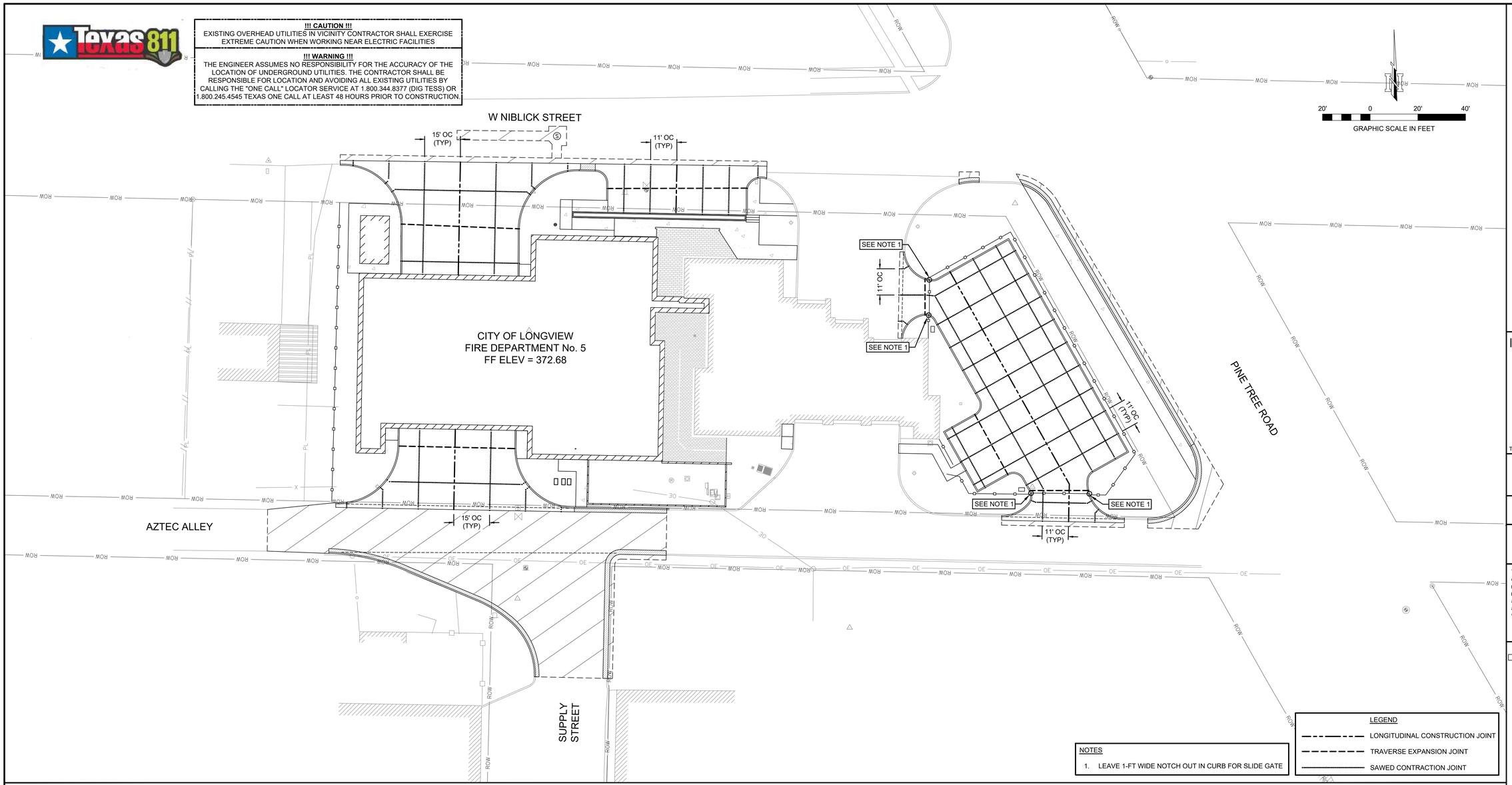

NOTES

1. LEAVE 1-FT WIDE NOTCH OUT IN CURB FOR SLIDE GATE

LEGEND

- LONGITUDINAL CONSTRUCTION JOINT
- TRAVERSE EXPANSION JOINT
- SAWED CONTRACTION JOINT

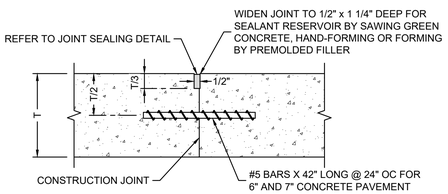

NOTES:

1. TIE BARS SHALL BE GRADE 60 DEFORMED BARS WITH A MAXIMUM SPACING OF 24" OC AND SHALL BE OFFSET 18" FROM TRANSVERSE JOINT IN INTERSECTIONS.
2. BENT BARS SHALL BE STRAIGHTENED. BROKEN OR MISSING BARS SHALL BE REPLACED WITH NEW BARS. DRILL AND EPOXY REPLACEMENT BARS IN PLACE AS DIRECTED BY THE CITY OF LONGVIEW.
3. TIE BARS SHALL NOT BE PAINTED, GREASED, OR ENCLOSED IN SLEEVES.

LONGITUDINAL CONSTRUCTION JOINT

NTS

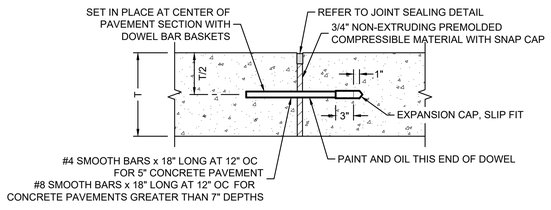

NOTES:

1. DOWEL BARS SHALL BE SPACED AT 12" OC AND SHALL BE OFFSET 18" FROM LONGITUDINAL JOINT INTERSECTIONS.
2. BENT, BROKEN, OR MISSING BARS SHALL BE REPLACED WITH NEW BARS. DRILL AND EPOXY BARS IN PLACE AS DIRECTED BY THE CITY OF LONGVIEW.
3. DOWEL PLACEMENT TOLERANCE SHALL BE ±1/4" HORIZONTALLY AND VERTICALLY. REMOVE SHIPPING WIRES FROM DOWEL BAR BASKETS PRIOR TO CEMENT PLACEMENT.

TRANSVERSE EXPANSION JOINTS

NTS

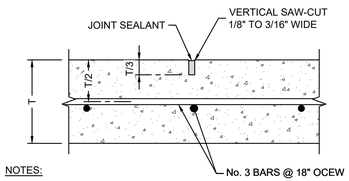

NOTES:

1. SAWED CONTRACTION JOINTS WILL BE SPACED AT 11' MAXIMUM ON 5" CONCRETE PAVEMENT AND 15' MAXIMUM ON 11" CONCRETE PAVEMENT.

SAWED CONTRACTION JOINT

NTS

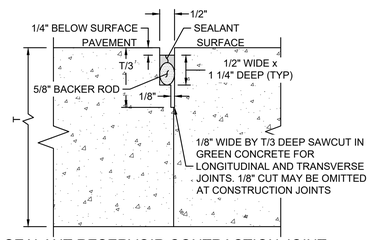

SEALANT RESERVOIR CONTRACTION JOINT, TRANSVERSE JOINT, CONSTRUCTION JOINT

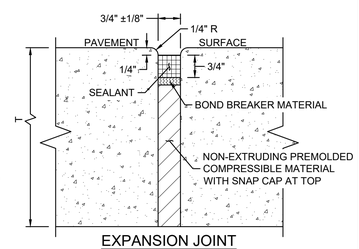

EXPANSION JOINT

NOTE:

LONGITUDINAL AND TRANSVERSE JOINTS SHALL BE A MINIMUM OF 1/8" WIDE FOR 1/3 OF THE PAVEMENT THICKNESS.

JOINT SEALING

NTS

Architects Design Group

Architects and Planners

I.S.K. Reeves V, F.A.I.A.
Ian A. Reeves, A.I.A.
Susan Gantt A.I.A., LEED-AP

333 N. Knowles Ave.
Winter Park, Florida 32789
(407) 647-1706

Corporate Registration Number: BR1177

In Association With:

KSA

140 E. Tyler Street, Suite 600
Longview, Texas 75601
T. 903-236-7700 F. 888-224-9418
www.ksaeng.com

TBPE FIRM REGISTRATION NO. F-1356

LONGVIEW FIRE DEPARTMENT No. 5

LONGVIEW, TEXAS

100% BID SET

The architect hereby expressly reserves his common law copyright and other property rights in these drawings. These drawings shall not be reproduced without written permission and consent of the architect, nor are they to be assigned to any party without first obtaining written permission and consent.

REVISIONS/ADDENDA

Number	Description	Date Issued

STATE OF TEXAS
MICHAEL A. BURNS
59990
LICENSED
ARCHITECT
06/1/2020

SHEET TITLE:

JOINT LAYOUT PLAN

scale: 1" = 20'
drawn: P C H
checked: A C L
approved: M A B
date: June 5, 2020

PROJECT NUMBER:

MI.2076

SHEET NUMBER:

C-106

\\ksa-server3\P Drive\Projects\MI2076\008 CAD\30 Sheets\MI2076 - C - LO - SITE - JOINT - 0001.dwg

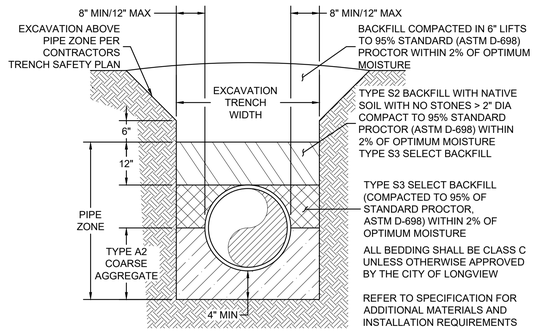

TYPE A2	ANGULAR 3/4" TO 1" CRUSHED ROCK OR NATURAL STONE MEETING THE REQUIREMENTS OF ATM C-33 No. 57. EMBEDMENT MATERIAL SHALL BE CLEAN, WASHED, SOUND, DURABLE, AND WELL GRADED.
TYPE S2	GRADED FREE OF LUMPS LARGER THAN 3", ROCKS LARGER THAN 2", EXCESSIVE SILTS, AND DEBRIS. DO NOT USE SOIL CONTAINING BRUSH, ROOTS, OR SIMILAR ORGANIC MATTER. CONFORMING TO ASTM D2487 CLASS II OR CLASS III SOILS WITH A LIQUID LIMIT LESS THAN 40, AND THE PLASTICITY INDEX LESS THAN 20, BUT GREATER THAN 4.
TYPE S3	CLAYEY SAND SOILS FREE FROM ORGANIC MATTER WITH NO LUMPS LARGER THAN 1", NO ROCKS LARGER THAN 1/2", NOR EXCESSIVE SILTS. DO NOT USE SOILS CONTAINING BRUSH, ROOTS, SOD, OR OTHER ORGANIC MATERIALS. SELECT FILL SHALL CONFORM TO ASTM D2487 CLASS II OR CLASS III AND SHALL HAVE A LIQUID LIMIT LESS THAN 30 WITH PLASTICITY INDEX LESS THAN 15, BUT GREATER THAN 4.

UTILITY LINE INSTALLATION CLASS C EMBEDMENT

NTS

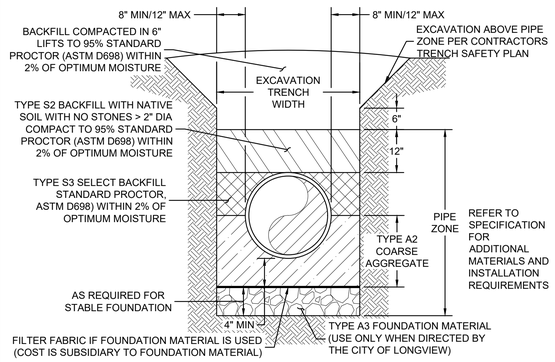

TYPE A2	ANGULAR 3/4" TO 1" CRUSHED ROCK OR NATURAL STONE MEETING THE REQUIREMENTS OF ATM C-33 NO. 57. EMBEDMENT MATERIAL SHALL BE CLEAN, WASHED, SOUND, DURABLE, AND WELL GRADED.
TYPE A3	COARSE STONE OR CRUSHED GRAVEL. FOUNDATION MATERIAL SHALL BE PIT RUN ANGULAR CRUSHED, NATURAL WASHED STONE FREE OF SHALE, CLAY, FRIABLE MATERIAL AND DEBRIS; WELL GRADED BETWEEN 1" AND 3" IN SIZE, WITH A MINIMUM OF 90% RETAINED ON A 1" SIEVE.
TYPE S2	GRADED FREE OF LUMPS LARGER THAN 3", ROCKS LARGER THAN 2", EXCESSIVE SILTS, AND DEBRIS. DO NOT USE SOIL CONTAINING BRUSH, ROOTS, OR SIMILAR ORGANIC MATTER. CONFORMING TO ASTM D2487 CLASS II OR CLASS III SOILS WITH A LIQUID LIMIT LESS THAN 40, AND THE PLASTICITY INDEX LESS THAN 20, BUT GREATER THAN 4.
TYPE S3	CLAYEY SAND SOILS FREE FROM ORGANIC MATTER WITH NO LUMPS LARGER THAN 1", NO ROCKS LARGER THAN 1/2", NOR EXCESSIVE SILTS. DO NOT USE SOILS CONTAINING BRUSH, ROOTS, SOD, OR OTHER ORGANIC MATERIALS. SELECT FILL SHALL CONFORM TO ASTM D2487 CLASS II OR CLASS III AND SHALL HAVE A LIQUID LIMIT LESS THAN 30 WITH PLASTICITY INDEX LESS THAN 15, BUT GREATER THAN 4.

UTILITY LINE INSTALLATION CLASS D EMBEDMENT

NTS

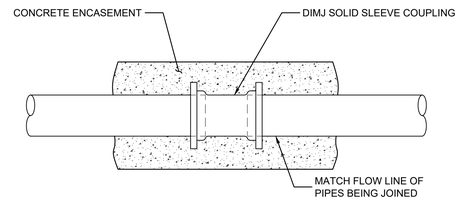

NOTES:

1. USE TRANSITION GASKETS BETWEEN PIPE TYPES WHEN POSSIBLE.
2. BLOCK PIPES CAREFULLY PRIOR TO CONCRETE ENCASEMENT TO ENSURE ACCURATE PIPE ALIGNMENT.
3. COMPLETED JOINT MUST BE ABLE TO PASS MANDREL TESTING.

SEWER LINE TRANSITION COUPLING

NTS

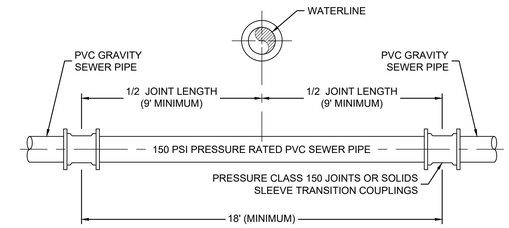

NOTES:

1. FOR NEW WATER/SEWER INSTALLATION, THE WATERLINE SHALL BE LOCATED ABOVE THE SEWER LINE.
2. CROSSING PIPES WITHIN 9 FEET, WHERE THE COLLECTION PIPE IS BELOW THE WATERLINE, CONSTRUCT THE COLLECTION LINE USING THE FOLLOWING:
   a. 150 PSI PRESSURE CLASS PIPE AT LEAST 18 FEET LONG WITH JOINT CENTERED ON THE CROSSING.
   b. AT LEAST 6" OF VERTICAL SEPARATION.
   c. TERMINATING JOINTS DESIGNED TO SEAL AT ATMOSPHERIC PRESSURE.
3. FOR NEW WATERLINE CROSSING EXISTING SEWER, REMOVE EXISTING SEWER LINE AND REPLACE WITH A FULL JOINT OF 150 PSI OR GREATER PRESSURE RATED PVC PIPE. CENTER JOINT AT WATERLINE CROSSING. INSTALL PRESSURE RATED TRANSITIONS.

SEWER - WATER CROSSING

NTS

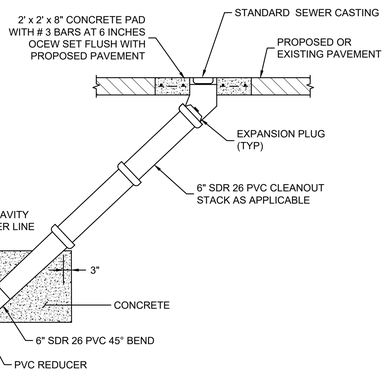

NOTE:

1. ALL PIPE AND FITTINGS SHALL BE SDR 26 PVC UNLESS OTHERWISE NOTED.
2. AT UNPAVED AREAS, TERMINATE IN CITY OF LONGVIEW APPROVED PLASTIC METER BOX. INSTALL LEVEL WITH ADJACENT FINISHED GRADE.
3. CONCRETE PAD SHALL BE A MINIMUM OF 8" THICK OR THICKNESS OF CONCRETE PAVEMENT.
4. IN PAVED AREAS, BACKFILL CLEANOUT USING SELECT FILL (SOIL TYPE S3) OR CITY OF LONGVIEW APPROVED EQUAL.
5. COMPACT SUBGRADE TO 95% OF STANDARD PROCTOR WITHIN 2% OF OPTIMUM MOISTURE IN 6" LIFTS.

MAIN LINE CLEANOUT

NTS

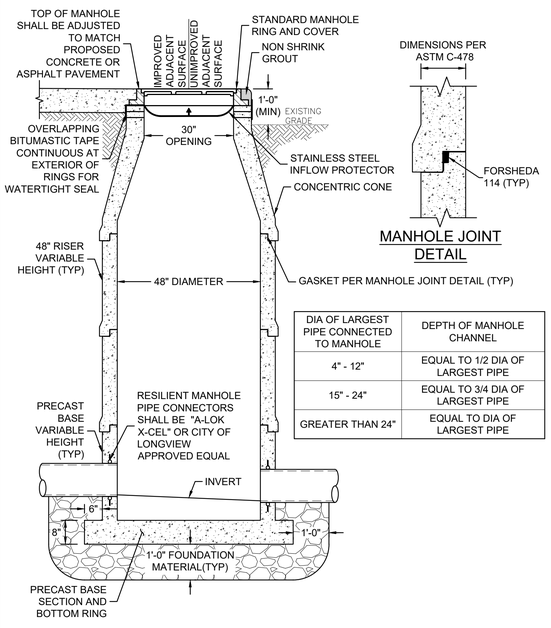

DIA OF LARGEST PIPE CONNECTED TO MANHOLE	DEPTH OF MANHOLE CHANNEL
4" - 12"	EQUAL TO 1/2 DIA OF LARGEST PIPE
15" - 24"	EQUAL TO 3/4 DIA OF LARGEST PIPE
GREATER THAN 24"	EQUAL TO DIA OF LARGEST PIPE

MANHOLE JOINT DETAIL

NOTE:

CONSTRUCT INVERT ON EVEN SLOPE FROM PIPE TO PIPE. THE BENCH ABOVE THE CHANNEL SHALL BE SLOPED AT 1/2 INCH PER FOOT. INVERT GROUT f'c = 3,000 PSI

MANHOLE SECTION

NTS

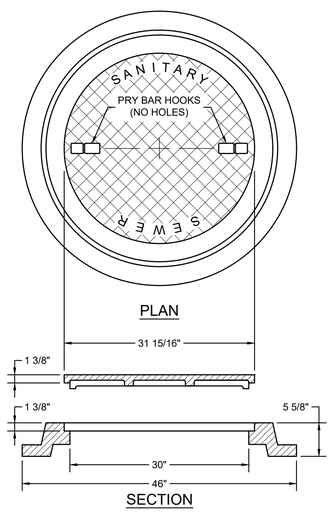

NOTE:

1. FRAME AND COVER TO BE MACHINED SURFACE CAST IRON NON-ROCKING TYPE, WITH NO HOLES.
2. ASTM A48, CLASS 30B CAST IRON CONSTRUCTION, MACHINED FLAT BEARING SURFACE, AND REMOVABLE.
3. LID DESIGN; LIVE LOAD RATING OF 20,000 PSI, SEALING GASKET, AND MOLDED WITH "SANITARY SEWER" MARKED ON LID.
4. THE RING AND LID SHALL WEIGH A MINIMUM OF 350 LBS.

MANHOLE RING AND COVER

NTS

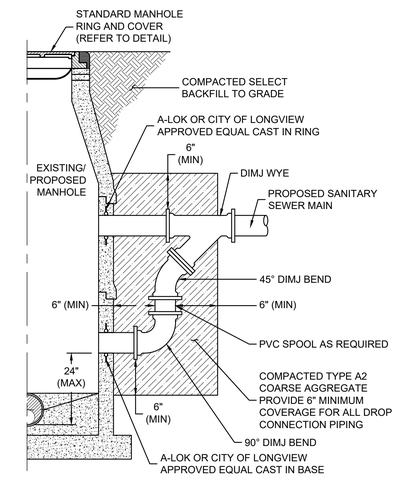

NOTE:

1. DROP MANHOLE CONNECTIONS SHALL BE CONSTRUCTED WHERE A CONNECTION PIPE ENTERS A MANHOLE MORE THAN 24" ABOVE THE MANHOLE INVERT.
2. ALL DI FITTINGS SHALL HAVE MJ RETAINING GLANDS.
3. DROP CONNECTION PIPE AND FITTINGS SHALL BE THE SAME DIAMETER AS THE SEWER MAIN.

DROP MANHOLE CONNECTION

NTS

Architects Design Group

Architects and Planners

I.S.K. Reeves V, F.A.I.A.
Ian A. Reeves, A.I.A.
Susan Gantt A.I.A., LEED-AP

333 N. Knowles Ave.
Winter Park, Florida 32789
(407) 647-1706

Corporate Registration Number: BR1177

In Association With:

KSA

140 E. Tyler Street, Suite 600
Longview, Texas 75601
T. 903-236-7700 F. 888-224-9418
www.ksaeng.com

TBPE FIRM REGISTRATION NO. F-1356

LONGVIEW FIRE DEPARTMENT No. 5

LONGVIEW, TEXAS

100% BID SET

The architect hereby expressly reserves his common law copyright and other property rights in these drawings. These drawings shall not be reproduced without written permission and consent of the architect, nor are they to be assigned to any party without first obtaining written permission and consent.

REVISIONS/ADDENDA

Number	Description	Date Issued

STATE OF TEXAS — MICHAEL A. BURNS — 59990 — REGISTERED PROFESSIONAL ENGINEER — 06/5/2020

SHEET TITLE:

MISCELLANEOUS DETAILS I

scale: 1" = 20'
drawn: P C H
checked: A C L
approved: M A B
date: June 5, 2020

PROJECT NUMBER:

MI.2076

SHEET NUMBER:

C-107

\\ksa-server3\P Drive\Projects\MI2076\008 CAD\30 Sheets\MI2076 - C - DT - MISC - 0001.dwg

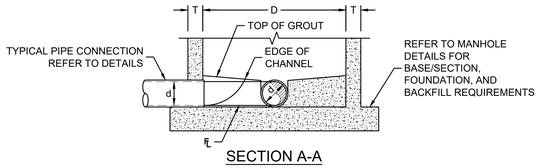

SECTION A-A

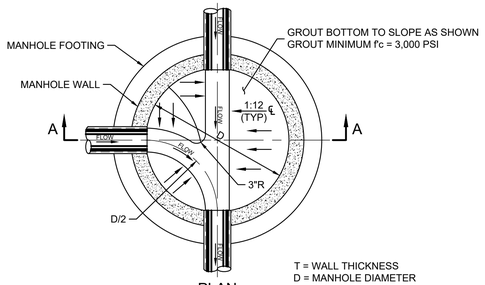

PLAN

T = WALL THICKNESS
D = MANHOLE DIAMETER
d = PIPE DIAMETER

NOTES:

1. REFER TO SANITARY MANHOLE DETAIL FOR CHANNEL DEPTHS.
2. CONNECT INVERT ON EVEN SLOPE FROM INLET PIPE(S) TO OUTLET PIPE.
3. FOR CONNECTIONS TO EXISTING MANHOLES, REMOVE EXISTING INVERT IF NEW LINE PENETRATES MANHOLE BELOW EXISTING INVERT. INSTALL NEW INVERT AFTER CONNECTION IS COMPLETE.

MANHOLE INVERT

NTS

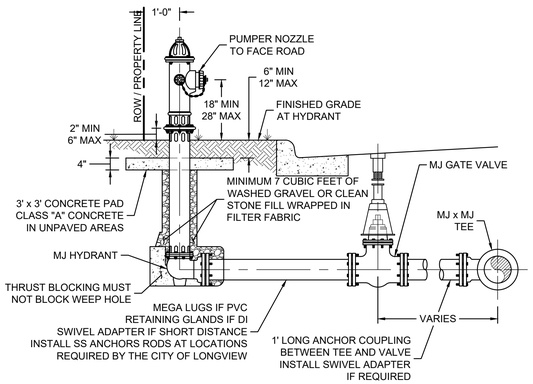

NOTES:

1. CITY OF LONGVIEW ACCEPTABLE FIRE HYDRANTS ASSEMBLIES AREA AS FOLLOWS: MUELLER A-423, AMERICAN DARLING B84 Btc, OR CLOW-MEDALLION.
2. ALL FIRE HYDRANTS SHALL CONFORM TO AWWA STANDARD SPECIFICATIONS FOR FIRE HYDRANTS FOR ORDINARY WATER WORKS SERVICE, C-502.
3. TYPICAL VALVE: ACTUAL VALVE LOCATION WILL DEPEND ON LOCATION OF WATER MAIN.
4. STANDARD BURY DEPTH 4' FEET.
5. SET FIRE HYDRANT ON THE LOT LINE EXTENDED WHEN POSSIBLE.
6. FIRE HYDRANTS SHALL BE YELLOW IN COLOR.
7. ALL MATERIALS SHALL BE AS LISTED ON THE CITY OF LONGVIEW APPROVED PRODUCTS LIST - LATEST VERSION

FIRE HYDRANT INSTALLATION

NTS

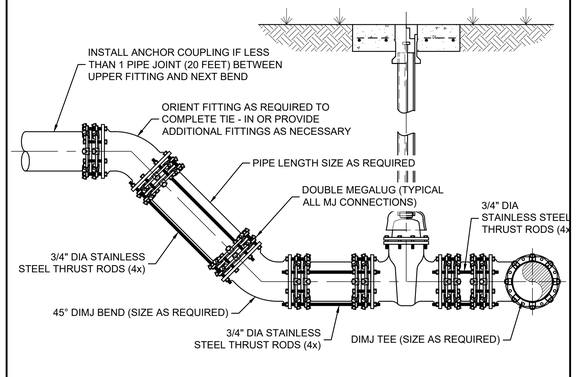

NOTES:

1. TIE - IN DETAIL WITH DOUBLE MEGALUGS AND ANCHOR RODS REQUIRED AT LOCATIONS WHEN WATER LINE MUST BE PUT IN SERVICE BEFORE CONCRETE BLOCKING CAN REACH 28-DAY COMPRESSIVE STRENGTH.
2. THRUST BLOCKING OMITTED FOR CLARITY. INSTALL CONCRETE THRUST BLOCKING AT ALL VALVES AND FITTINGS.
3. LOCATE VALVE AS CLOSE TO TIE - IN AS POSSIBLE. TIE - IN USING SHORT SPOOL WITH ANCHOR RODS OR ANCHOR COUPLING BETWEEN MJ TEE AND VALVE.
4. PVC PIPE CONNECTIONS SHALL HAVE DOUBLE MEGALUGS WITH ANCHOR RODS. DI PIPE SHALL HAVE RETAINING GLANDS WITH ANCHOR RODS.
5. INSTALL ANCHOR COLLAR AND ANCHOR RODS AT UPPER FITTING IF LESS THAN 1 PIPE JOINT (20 FEET) BETWEEN UPPER FITTING AND NEXT BEND ON LINE.
6. IF AREA UNDER UPPER FITTING IS OVER EXCAVATED, BACKFILL AND COMPACT WITH SELECT FILL TO 95% OF MAXIMUM DENSITY (ASTM D698) WITHIN 2% OF OPTIMUM MOISTURE OR AS DIRECTED BY THE CITY OF LONGVIEW.
7. INSTALL CLASS C EMBEDMENT UNLESS OTHERWISE DIRECTED BY THE CITY OF LONGVIEW.

WATERLINE TIE - IN

NTS

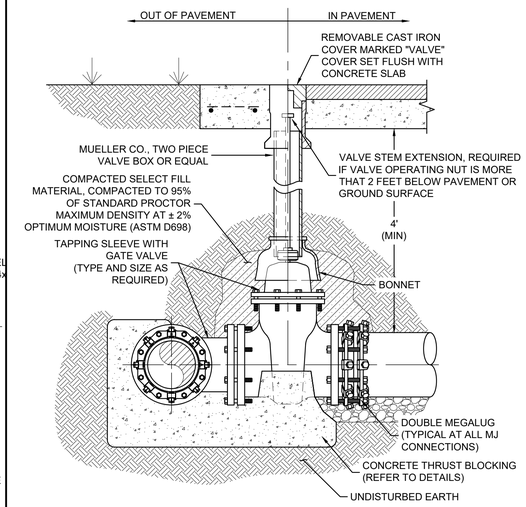

NOTES:

1. DRAWING PERTAINS TO ALL GATE VALVES SIZES 4" THRU 12".
2. IN UNPAVED AREAS, INSTALL 2' x 2' x 6" CONCRETE VALVE PAD FLUSH WITH TOP OF VALVE BOX, REINFORCE WITH #3 BARS AT 6" OCEW.
3. TAPPING SLEEVES SHALL BE STAINLESS STEEL WITH STAINLESS STEEL NUTS AND BOLTS (SLEEVE MAY BE EPOXY COATED STAINLESS STEEL).
4. FULL DIAMETER DUCTILE IRON TAPPING SLEEVES MAY BE USED IN PLACE OF STAINLESS STEEL.
5. ALL MATERIALS SHALL BE AS LISTED ON THE CITY OF LONGVIEW APPROVED PRODUCTS LIST - LATEST VERSION.

WATERLINE TAPPING SLEEVE AND VALVE

NTS

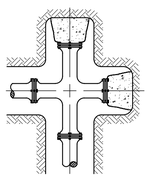

TYPICAL SECTION OF CROSS AND 2 PLUG BLOCKING
(WHEN DIRECTED BY CITY OF LONGVIEW)

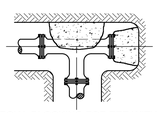

SPECIAL BLOCKING FOR TEE WITH PLUG
(WHEN DIRECTED BY CITY OF LONGVIEW)

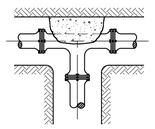

BLOCKING FOR TEE

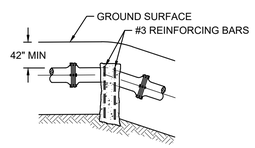

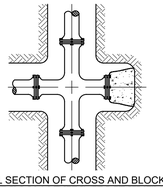

TYPICAL SECTION OF CROSS AND BLOCKING
(WHEN DIRECTED BY CITY OF LONGVIEW)

THRUST SUPPORT FOR REDUCER CONNECTION
(SIZE TO BE DETERMINED BY CITY OF LONGVIEW)

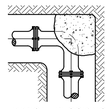

TYPICAL BLOCKING FOR HORIZONTAL BENDS

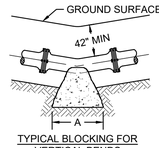

TYPICAL BLOCKING FOR VERTICAL BENDS

PIPE SIZE	TEES	BENDS			REDUCER		
	THRUST BLOCKING REQ'D (SF)	90° THRUST BLOCKING REQ'D (SF)	45° THRUST BLOCKING REQ'D (SF)	22 1/2° THRUST BLOCKING REQ'D (SF)	PIPE SIZE (IN)	ANGLE (THETA)	THRUST BLOCKING REQ'D (SF)
2 1/2"	0.61	0.43	0.23	0.12	4 - 3	8.2	0.05
3"	0.88	0.62	0.34	0.17	6 - 3	19.5	0.45
4"	1.57	1.11	0.60	0.31	6 - 4	12.8	0.22
6"	3.53	2.50	1.35	0.69	8 - 6	10.5	0.25
8"	6.28	4.44	2.40	1.23	10 - 8	9.6	0.30
10"	9.82	6.94	3.76	1.92	12 - 10	8.2	0.31
12"	14.14	10.00	5.41	2.76	14 - 12	7.2	0.32
14"	19.24	13.61	7.36	3.75	18 - 12	18.4	2.83
16"	25.13	17.77	9.62	4.90	20 - 14	17.5	3.04
18"	31.81	22.49	12.17	6.21	20 - 16	11.5	1.42
20"	39.27	27.77	15.03	7.66	24 - 18	14.5	3.12
24"	56.55	39.99	21.64	11.03	24 - 20	9.6	1.44
30"	88.36	62.48	33.81	17.24	30 - 20	19.5	8.30
36"	127.23	89.97	48.69	24.82	30 - 24	11.5	3.20

NOTES ON THRUST BLOCKING:

1. ALL BLOCKING SHALL BE AGAINST UNDISTURBED HAND DUG SOIL AND SHALL BE CONCRETE HAVING A MINIMUM 28 DAY COMPRESSIVE STRENGTH OF 3,000 PSI.
2. THRUST CALCULATIONS TO BE BASED ON THRUST DUE TO WATER PRESSURE AT 100% OF TEST PRESSURE.
3. VERTICAL UPLIFT BLOCKS SHALL BE DESIGNED ON THE BASIS OF 150 LBS PER CU FT FOR CONCRETE AND SOIL AT 120 LBS PER CU FT OVER THE AREA OF BLOCK.
4. VERTICAL DOWN THRUST BLOCKS SHALL BE DESIGNED ON THE BASIS OF 3,000 LBS PER SQ FT ALLOWABLE SOIL BEARING PRESSURE. DIMENSIONS MAY BE DECREASED WITH APPROVAL OF THE CITY OF LONGVIEW OR MEASURED SOIL CONDITIONS. IN POOR SOIL CONDITIONS, BLOCK DIMENSIONS SHALL BE INCREASED IN PROPORTION TO ALLOWABLE BEARING VALUE.
5. THRUST BLOCKS ON HORIZONTAL BENDS, TEES, CROSSES, AND REDUCERS SHALL BE SIZED BASED ON 2,400 LBS PER SQ FT OF BLOCKING SURFACE AREA IN CONTACT WITH UNDISTURBED SOIL, BLOCK DIMENSIONS MAY BE DECREASED WITH APPROVAL OF THE CITY OF LONGVIEW OR MEASURED SOIL CONDITIONS. IN POOR SOIL CONDITIONS, BLOCK DIMENSIONS SHALL BE INCREASED IN PROPORTION TO THE ALLOWABLE BEARING VALUE.
6. ALL BLOCKING SHALL HAVE A MINIMUM SOIL COVER OF TWO FEET.
7. ADDITIONAL REINFORCING MAY BE REQUIRED FOR HORIZONTAL BLOCKING TO HANDLE UNUSUAL SHEAR LOADING CONDITIONS.
8. ANCHOR COLLARS SHALL BE REINFORCED IN ACCORDANCE WITH REINFORCING BAR SCHEDULE FOR REDUCED BLOCKS SHOWN ABOVE. STEEL ANCHOR RING IN ACCORDANCE WITH DIMENSIONS OF ANCHOR COLLAR.

THRUST BLOCKING DETAILS

NTS

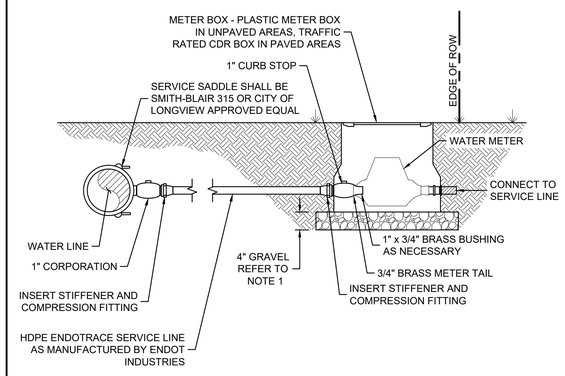

NOTES:

1. 3/4" TO 1" CRUSHED ROCK OR NATURAL STONE MEETING THE REQUIREMENTS OF ATM C-33 No. 57. ROCK MATERIAL SHALL BE CLEAN, WASHED, SOUND, DURABLE, AND WELL GRADED.
2. METER BOX - FROM CITY OF LONGVIEW APPROVED PRODUCT LIST: PLASTIC METER BOX SHALL BE INSTALLED OUTSIDE OF DRIVEWAYS, SIDEWALKS, OR PAVEMENT. METER BOXES LOCATED IN DRIVEWAYS, SIDEWALKS, OR PAVEMENT SHALL BE PRE-FAB FIBERCRETE BOX WITH COVER AS MANUFACTURED BY CDR (HUBBELL POWER SYSTEMS, INC.) A221118501050 WATER OR CITY OF LONGVIEW APPROVED EQUAL.
3. NEW METER FITTINGS SHALL HAVE FLARED CONNECTIONS.
4. ALL FITTINGS SHALL BE IN ACCORDANCE WITH AWWA C-800. NO-LEAD BRASS SHALL CONTAIN NO MORE THAN ONE FIFTH (0.20% OR LESS) TOTAL LEAD CONTENT BY WEIGHT.
5. ALL MATERIALS, PIPE, TUBING, METER BOX, COVER, AND FITTINGS SHALL BE NEW.
6. ALL MATERIALS SHALL BE AS LISTED ON THE CITY OF LONGVIEW APPROVED PRODUCTS LIST - LATEST VERSION.
7. PERMIT REQUIRED FOR CONNECTION TO EXISTING WATERLINE.
8. WATERLINE TAP SHALL BE MADE BY THE CITY OF LONGVIEW OR APPROVED CONTRACTOR. TAP SHALL BE INSPECTED BY CITY OF LONGVIEW.
9. WATER METER SHALL BE SET BY THE CITY OF LONGVIEW. METER APPLICATION AND FEE REQUIRED. METER SET INSPECTION REQUIRED.

WATER SERVICE 1-IN

NTS

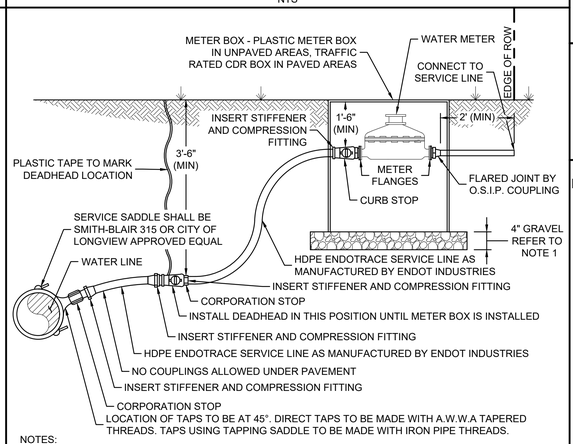

NOTES:

1. 3/4" TO 1" CRUSHED ROCK OR NATURAL STONE MEETING THE REQUIREMENTS OF ATM C-33 No. 57. ROCK MATERIAL SHALL BE CLEAN, WASHED, SOUND, DURABLE, AND WELL GRADED.
2. METER BOX - FROM CITY OF LONGVIEW APPROVED PRODUCT LIST: PLASTIC METER BOX SHALL BE INSTALLED OUTSIDE OF DRIVEWAYS, SIDEWALKS, OR PAVEMENT. METER BOXES LOCATED IN DRIVEWAYS, SIDEWALKS, OR PAVEMENT SHALL BE PRE-FAB FIBERCRETE BOX WITH COVER AS MANUFACTURED BY CDR (HUBBELL POWER SYSTEMS, INC.) A221118501050 WATER OR CITY OF LONGVIEW APPROVED EQUAL.
3. NEW METER FITTINGS SHALL HAVE FLARED CONNECTIONS.
4. ALL FITTINGS SHALL BE IN ACCORDANCE WITH AWWA C-800. NO-LEAD BRASS SHALL CONTAIN NO MORE THAN ONE FIFTH (0.20% OR LESS) TOTAL LEAD CONTENT BY WEIGHT.
5. ALL MATERIALS, PIPE, TUBING, METER BOX, COVER, AND FITTINGS SHALL BE NEW.
6. ALL MATERIALS SHALL BE AS LISTED ON THE CITY OF LONGVIEW APPROVED PRODUCTS LIST - LATEST VERSION.
7. PERMIT REQUIRED FOR CONNECTION TO EXISTING WATERLINE.
8. WATERLINE TAP SHALL BE MADE BY THE CITY OF LONGVIEW OR APPROVED CONTRACTOR. TAP SHALL BE INSPECTED BY CITY OF LONGVIEW.
9. WATER METER SHALL BE SET BY THE CITY OF LONGVIEW. METER APPLICATION AND FEE REQUIRED. METER SET INSPECTION REQUIRED.

WATER SERVICE 1.5-IN OR 2-IN

NTS

Architects Design Group

Architects and Planners

I.S.K. Reeves V, F.A.I.A.
Ian A. Reeves, A.I.A.
Susan Gantt A.I.A., LEED-AP

333 N. Knowles Ave.
Winter Park, Florida 32789
(407) 647-1706

Corporate Registration Number: BR1177

In Association With:

KSA

140 E. Tyler Street, Suite 600
Longview, Texas 75601
T. 903-236-7700 F. 888-224-9418
www.ksaeng.com

TBPE FIRM REGISTRATION NO. F-1356

LONGVIEW FIRE DEPARTMENT No. 5

LONGVIEW, TEXAS

100% BID SET

The architect hereby expressly reserves his common law copyright and other property rights in these drawings. These drawings shall not be reproduced without written permission and consent of the architect, nor are they to be assigned to any party without first obtaining written permission and consent.

REVISIONS/ADDENDA

Number	Description	Date Issued

STATE OF TEXAS
MICHAEL A. BURNS
59990
LICENSED
PROFESSIONAL ENGINEER
06/5/2020

SHEET TITLE:

MISCELLANEOUS DETAILS II

scale: 1" = 20'
drawn: P C H
checked: A C L
approved: M A B
date: June 5, 2020

PROJECT NUMBER:

MI.2076

SHEET NUMBER:

C-108

\\ksa-server3\P Drive\Projects\MI2076\008 CAD\30 Sheets\MI2076 - C - DT - MISC - 0001.dwg

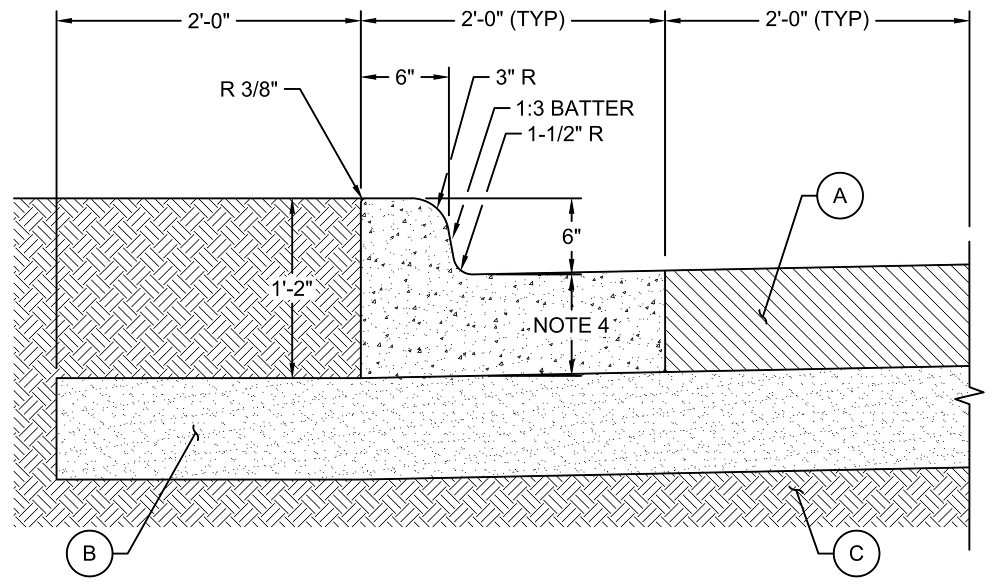

MARK | DESCRIPTION

(A) PAVEMENT PER CITY OF LONGVIEW STANDARDS.

(B) LIME OR CEMENT STABILIZED SUBGRADE PER CITY OF LONGVIEW STANDARDS. EXTEND COMPACTED STABILIZED SUBGRADE TO A MINIMUM OF 2 FEET BEYOND THE BACK OF CURB.

(C) SCARIFY AND COMPACTED SUBGRADE PER CITY OF LONGVIEW STANDARDS. EXTEND A MINIMUM OF 2 FEET BEYOND THE BACK OF CURB.

NOTES:

1. PORTLAND CEMENT CONCRETE SHALL BE TxDOT CLASS P HAVING A MINIMUM COMPRESSIVE STRENGTH OF 4400 PSI AT 28 DAYS (MINIMUM 6 SACKS PER CUBIC YARD).
2. CURB AND GUTTER SHALL HAVE BROOM FINISH.
3. CROSS SLOPE OF GUTTER SHALL MATCH THE CROSS SLOPE OF THE PAVEMENT SECTION UNLESS OTHERWISE DIRECTED BY THE CITY OF LONGVIEW.
4. GUTTER THICKNESS SHALL MATCH THE THE PAVEMENT THICKNESS (6" MINIMUM).
5. FOR AREAS WITH SIDEWALK ADJACENT TO THE CURB AND GUTTER, THE LOCATIONS OF JOINTS IN THE SIDEWALK AND CURB AND GUTTER SHALL MATCH. INSTALL 1/2" EXPANSION JOINT AT BACK OF CURB BETWEEN CURB AND SIDEWALK.

STANDARD CURB AND GUTTER
NTS

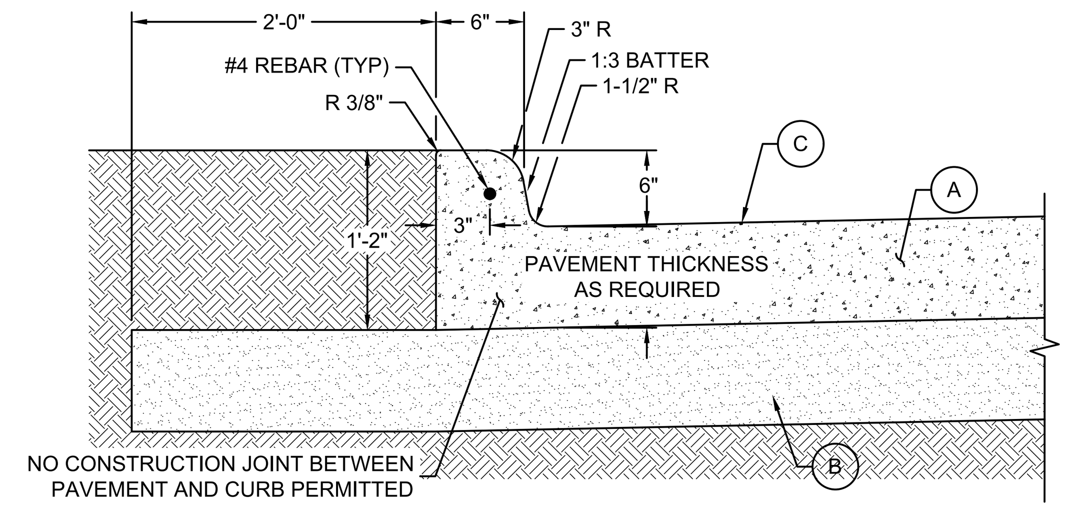

MARK | DESCRIPTION

(A) CONCRETE PAVEMENT PER CITY OF LONGVIEW STANDARD (MINIMUM 6" THICK FOR RESIDENTIAL LOCAL AND MINIMUM 7" THICK FOR RESIDENTIAL COLLECTOR).

(B) LINE OR CEMENT STABILIZED SUBGRADE PER CITY OF LONGVIEW STANDARD. EXTEND STABILIZATION A MINIMUM OF 2' BEYOND THE BACK OF CURB.

(C) PROVIDE SCORE OR OTHER APPROVED DELINEATION LINE 24" FROM AND PARALLEL TO BACK OF CURB TO CREATE STANDARD 24" CURB AND GUTTER APPEARANCE. FINISH CURB AND GUTTER WITH BROOM FINISH MATCHING STANDARD 24" CURB AND GUTTER TO SET APART FROM PAVEMENT FINISH.

NOTES:

1. PORTLAND CEMENT PAVEMENT SHALL BE TxDOT CLASS P HAVING A MINIMUM 4400 PSI COMPRESSIVE STRENGTH AT 28 DAYS (MINIMUM 6 SACKS PER CUBIC YARD).
2. INSTALL TWO #4 DIA x 18" SMOOTH DOWEL BARS CENTERED IN GUTTER AT CONSTRUCTION JOINTS AND TRANSITIONS.
3. INSTALL TRANSVERSE JOINTS IN CURB AND GUTTER MATCHING PAVEMENT TRANSVERSE JOINT LOCATIONS AND TYPES.
4. CROSS SLOPE OF GUTTER SHALL MATCH CROSS SLOPE OF PAVEMENT.
5. CONSTRUCTION JOINT AND/OR COLD JOINT BETWEEN THE CURB AND PAVEMENT IS NOT PERMITTED.

MONOLITHIC CURB AND GUTTER
NTS

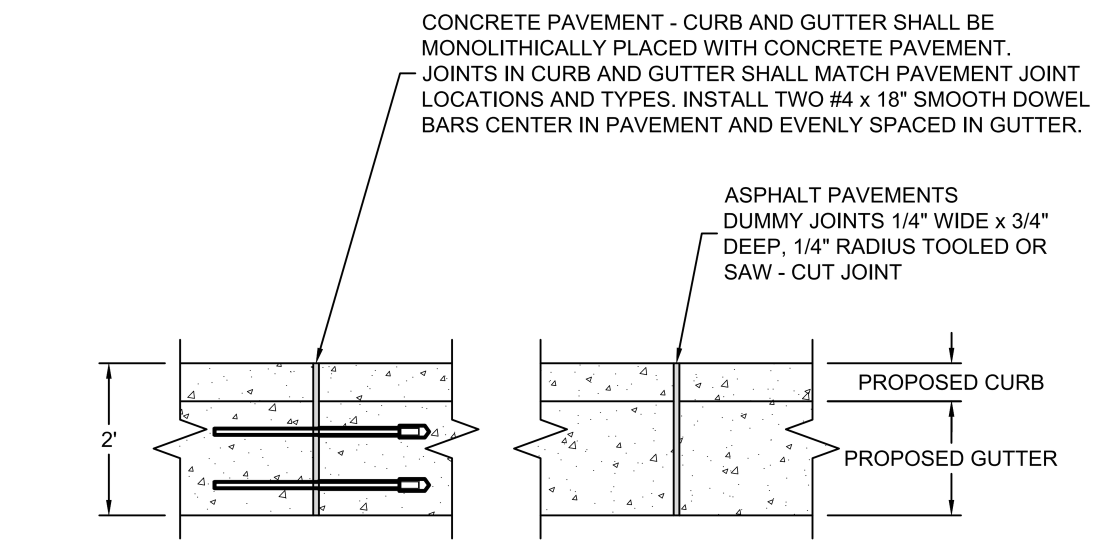

CURB AND GUTTER JOINT DETAIL (PLAN VIEW)

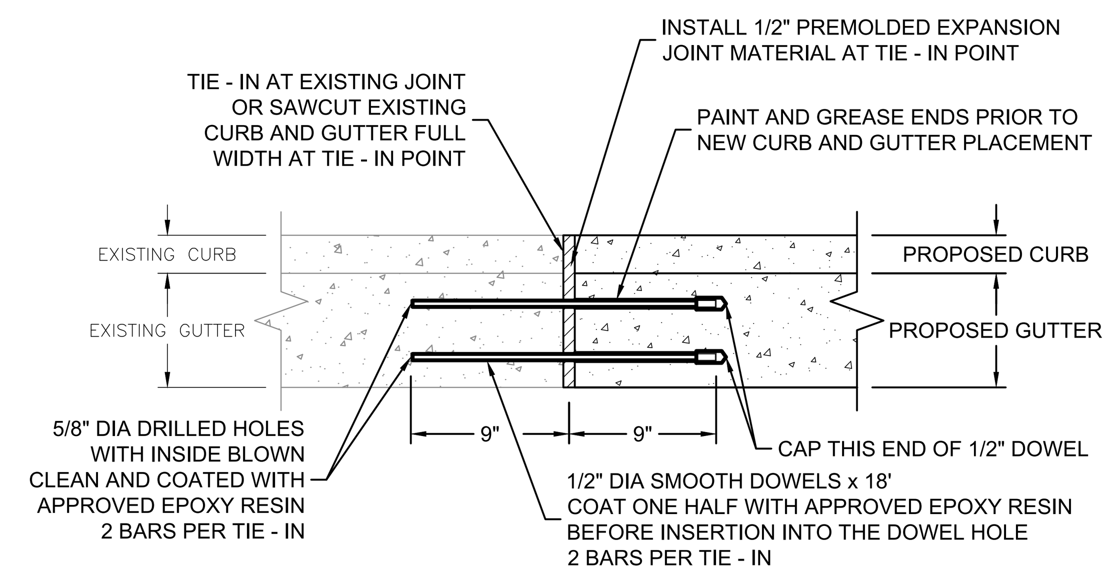

EXPANSION JOINT (PLAN VIEW)

CURB AND GUTTER JOINTS
NTS

NOTES:

1. PAVEMENT SECTION SHOWN IS MINIMUM SECTION ALLOWED FOR RESIDENTIAL STREET. DESIGN CONDITIONS VARY. PAVEMENT SECTION SHALL BE INCREASED AS DIRECTED BY THE CITY OF LONGVIEW AS CONDITIONS REQUIRE.
2. ALL RESIDENTIAL STREETS SHALL HAVE CURB AND GUTTER UNLESS OTHERWISE APPROVED BY THE CITY OF LONGVIEW.
3. TREATED SUBGRADE SHALL EXTEND 2' BEYOND THE PROPOSED BACK OF CURB FOR CURBED PAVEMENT AND 2' BEYOND THE EDGE OF PAVEMENT FOR NON-CURBED PAVEMENT.

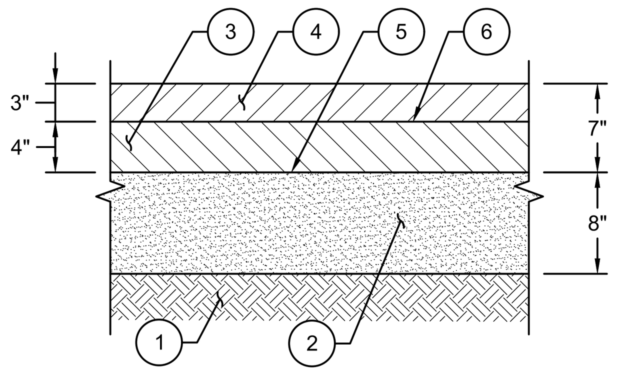

MARK | DESCRIPTION

(1) REMOVE ALL VEGETATION AND DEBRIS PRIOR TO BEGINNING EMBANKMENT. SCARIFY GROUND SURFACE TO 8" AND RECOMPACT TO 95% OF STANDARD PROCTOR (ASTM D-698). PROOF ROLL, TxDOT ITEM 216, ALL AREAS PRIOR TO PLACEMENT OF EMBANKMENT TO DETECT ANY AREAS OF WEAKNESS AND REPLACE WITH FOUNDATION MATERIAL AT CITY OF LONGVIEW'S DIRECTION. AT TIME OF COMPACTION, THE MOISTURE CONTENT OF THE SOIL SHALL BE AS FOLLOWS:

SOIL DESCRIPTION	PLASTICITY INDEX (PI)	MOISTURE CONTENT AT TIME OF COMPACTION
NON-PLASTIC SILTY SAND SOILS	PI<15	+/- 3%
SANDY CLAY SOILS	15<PI<25	-1% TO +3%
CLAY SOILS	PI>25	-1% TO +3%

INSTALL FILL FOR EMBANKMENT IN 8" LIFTS, COMPACTED TO A MINIMUM OF 95% OF STANDARD PROCTOR (ASTM D-698). MOISTURE CONTENT SHALL BE AS DESCRIBED ABOVE AT THE TIME OF COMPACTION. SELECT FILL SHALL BE ON-SITE CLAYEY SOILS OR OFF-SITE MATERIAL. OFF-SITE MATERIAL SHALL BE FREE OF ORGANIC MATTER, OR ROCK FRAGMENTS LARGER THAN 2" IN ANY DIRECTION AND POSSES A PLASTICITY INDEX BETWEEN 10 AND 45, WITH A LIQUID LIMIT OF 70 OR LESS. THE FIRST LIFT OF FILL SHALL BE PLACED WITHIN 48 HOURS OF SATISFACTORY COMPACTION OF THE UNDERLYING SUBGRADE SOILS.

BLEND THE SUBGRADE SOILS TO A DEPTH OF 12" OVER THE PHASE TO OBTAIN A UNIFORMLY CONSISTENT PLASTICITY INDEX PRIOR TO LIME STABILIZATION.

(2) 8" OF SUBGRADE SHALL BE STABILIZED WITH LIME OR CEMENT DEPENDING UPON THE PREDOMINANT SUBGRADE SOILS PLASTICITY INDEX AS INDICATED BELOW:
LIME TREATMENT OF CLAY SUBGRADE SOILS SHOULD BE ACCOMPLISHED IN ACCORDANCE WITH TxDOT ITEM 260. THE COMPACTION REQUIREMENTS INDICATED BELOW SHOULD BE SPECIFIED IN LIEU OF THE REQUIREMENTS RECOMMENDED BY TxDOT. LIME SHOULD BE ADDED TO THE SUBGRADE AFTER REMOVAL OF ALL SURFACE VEGETATION AND DEBRIS. A MINIMUM OF SIX PERCENT (6%) HYDRATED LIME SHOULD BE USED TO TREAT SANDY CLAY SUBGRADE SOILS HAVING A PLASTICITY INDEX (PI) BETWEEN 16 AND 25. A MINIMUM OF EIGHT PERCENT (8%) HYDRATED LIME SHOULD BE USED TO TREAT CLAY SUBGRADE SOILS HAVING A PLASTICITY INDEX (PI) OF 26 OR GREATER. LIME STABILIZED SUBGRADE SHALL BE COMPACTED TO A MINIMUM OF 95% OF STANDARD PROCTOR (ASTM D-698) @ ±3% OF OPTIMUM MOISTURE. THE REQUIRED APPLICATION RATES ARE OUTLINED BELOW:

PLASTICITY INDEX (PI)	APPLICATION (%)	DEPTH OF TREATMENT (INCHES)	LIME REQUIRED (LBS/SY)
16 TO 25	6	8	42
≥26	8	8	54

CEMENT TREATMENT OF SANDY SUBGRADE SOILS SHOULD BE ACCOMPLISHED IN ACCORDANCE WITH TxDOT ITEM 275. THE COMPACTION REQUIREMENTS INDICATED BELOW SHOULD BE SPECIFIED IN LIEU OF THE REQUIREMENTS RECOMMENDED BY TxDOT. TYPE I, TYPE II, OR TYPE I/II PORTLAND CEMENT SHOULD BE ADDED TO THE SUBGRADE AFTER REMOVAL OF ALL SURFACE VEGETATION AND DEBRIS. CEMENT SHOULD BE ADDED ONLY TO THAT AREA WHERE THE MIXING, COMPACTION AND FINE GRADING CAN BE COMPLETED IN DAYLIGHT WITHIN TWO (2) HOURS OF APPLICATION, AND IN ONE CONTINUOUS OPERATION. A MINIMUM OF FOUR PERCENT (4%) TYPE I, TYPE II, OR TYPE I/II PORTLAND CEMENT SHOULD BE USED TO TREAT SANDY AND/OR SILTY SUBGRADE SOILS HAVING A PLASTICITY INDEX (PI) OF 15 OR LESS. THE REQUIRED APPLICATION RATE FOR A FOUR PERCENT (4%) TREATMENT DEPTH OF EIGHT (8) INCHES IS OUTLINED BELOW BASED ON THE PLASTICITY INDEX (PI) OF THE PREDOMINANT SUBGRADE SOILS. CEMENT STABILIZED SUBGRADE SHALL BE COMPACTED TO A MINIMUM OF 95% OF STANDARD PROCTOR (ASTM D-698) @ -4% TO +1% OF OPTIMUM MOISTURE

PLASTICITY INDEX (PI)	APPLICATION (%)	DEPTH OF TREATMENT (INCHES)	CEMENT REQUIRED (LBS/SY)
≤15	4	8	30

(3) 4" OF HMAC INSTALLED IN ONE 4" LIFT, TxDOT ITEM 340, TYPE A OR B COMPACTED USING AIR VOID CONTROL METHOD.

(4) 3" OF HMAC, TxDOT ITEM 340, TYPE D, COMPACTED USING AIR VOID CONTROL METHOD.

(5) MC-30 PRIME COAT APPLIED AT A MAXIMUM RATE OF 0.25 GALLONS PER SQUARE YARD. RATE OF APPLICATION SHALL BE ADJUSTED IN THE FIELD TO PROVIDE UNIFORM COVERAGE WITHOUT RUNOFF, AND THE RATE SHALL BE APPROVED BY THE CITY OF LONGVIEW, BASED UPON FIELD TESTS.

(6) CRS-2H TACK COAT MECHANICALLY APPLIED AT A MAXIMUM RATE OF 0.10 GALLONS PER SQUARE YARD. RATE OF APPLICATION SHALL BE ADJUSTED IN THE FIELD TO PROVIDE UNIFORM COVERAGE WITHOUT RUNOFF, AND THE RATE SHALL BE APPROVED BY THE CITY OF LONGVIEW, BASED UPON FIELD TESTS. TACK COAT SHALL BE APPLIED BETWEEN ALL LAYERS OF HMAC.

7" HMAC PAVEMENT SECTION
NTS

NOTES:

1. ALL CONCRETE PAVEMENT SHALL HAVE MONOLITHIC CURB UNLESS OTHERWISE APPROVED BY THE CITY OF LONGVIEW.
2. TREATED SUBGRADE SHALL EXTEND 2' BEYOND THE PROPOSED BACK OF CURB FOR CURBED PAVEMENT SECTION AND 2' BEYOND THE EDGE OF PAVEMENT FOR NON-CURBED PAVEMENT.

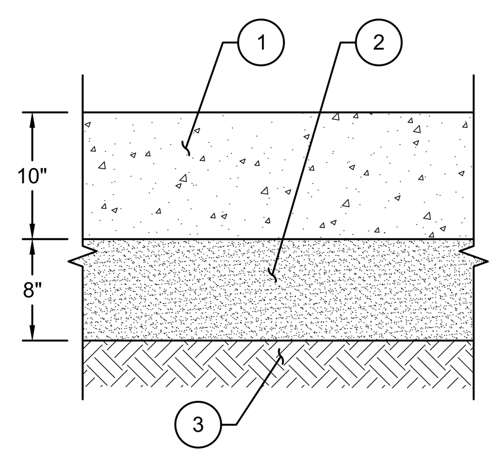

MARK | DESCRIPTION

(1) 10" REINFORCED PORTLAND CEMENT CONCRETE, TxDOT ITEM 360 (2014 EDITION), CLASS P, MINIMUM 3,200 PSI COMPRESSIVE STRENGTH AT 7 DAYS AND A MINIMUM 4,000 PSI COMPRESSIVE STRENGTH AT 28 DAYS WITH No. 4 BARS ON 18 INCH SPACING, CENTER TO CENTER, EACH WAY (MAXIMUM 15-FOOT JOINT SPACING). ALL COARSE AGGREGATE SHALL CONSIST OF CRUSHED STONE.

(2) LIME TREATED SUBGRADE, TxDOT ITEM 260 (2014 EDITION), (MINIMUM 8% HYDRATED LIME BY DRY WEIGHT, MINIMUM 54 POUNDS PER SQUARE YARD), COMPACTED TO A MINIMUM OF 95% STANDARD PROCTOR DENSITY (ASTM D698), AT A MOISTURE CONTENT WITHIN THREE PERCENTAGE POINTS (±3%) OF OPTIMUM MOISTURE.

(3) REMOVE ALL VEGETATION AND DEBRIS PRIOR TO BEGINNING EMBANKMENT. SCARIFY GROUND SURFACE TO 8" AND COMPACT TO 95% OF MAXIMUM DENSITY PER ASTM D-698 STANDARD PROCTOR. PROOF ROLL COMPACTED SUBGRADE PER TxDOT ITEM 216 PRIOR TO PLACEMENT OF EMBANKMENT TO DETECT ANY AREAS OF WEAKNESS AND REPLACE WITH FOUNDATION MATERIAL AS DIRECTED BY THE CITY OF LONGVIEW. DURING COMPACTION, THE MOISTURE CONTENT OF THE SOIL SHALL BE AS FOLLOWS:

SOIL DESCRIPTION COMPACTION	PLASTICITY INDEX (PI)	MOISTURE CONTENT AT TIME OF
NON-PLASTIC SILTY SAND SOILS	PI<15	+/- 3%
SANDY CLAY SOILS	15<PI<25	-1% TO +3%
CLAY SOILS	PI>25	-1% TO +3%

INSTALL FILL FOR EMBANKMENT IN 8" LIFTS, COMPACTED IN HORIZONTAL LIFTS TO A MINIMUM OF 95% OF MAXIMUM DENSITY PER ASTM D-698 STANDARD PROCTOR. MOISTURE CONTENT SHALL BE AS DESCRIBED ABOVE DURING COMPACTION. SELECT FILL SHALL BE ON-SITE CLAYEY SANDY SOILS OR OFF-SITE MATERIAL. MATERIAL SHALL BE FREE OF ORGANIC MATTER OR ROCK FRAGMENTS LARGER THAN 2" IN ANY DIRECTION AND POSSES A PLASTICITY INDEX BETWEEN 10 AND 45, WITH A LIQUID LIMIT OF 70 OR LESS. THE FIRST LIFT OF FILL SHALL BE PLACED WITHIN 48 HOURS OF SATISFACTORY COMPACTION OF THE UNDERLYING SUBGRADE SOILS.

IF DIRECTED BY THE CITY OF LONGVIEW, BLEND THE SUBGRADE SOILS TO A DEPTH OF 12" OVER THE PROJECT AREA TO OBTAIN A UNIFORMLY CONSISTENT PLASTICITY INDEX PRIOR TO LIME OR CEMENT STABILIZATION.

10" CONCRETE PAVEMENT SECTION
NTS

NOTES:

1. ALL CONCRETE PAVEMENT SHALL HAVE MONOLITHIC CURB UNLESS OTHERWISE APPROVED BY THE CITY OF LONGVIEW.
2. TREATED SUBGRADE SHALL EXTEND 2' BEYOND THE PROPOSED BACK OF CURB FOR CURBED PAVEMENT SECTION AND 2' BEYOND THE EDGE OF PAVEMENT FOR NON-CURBED PAVEMENT.

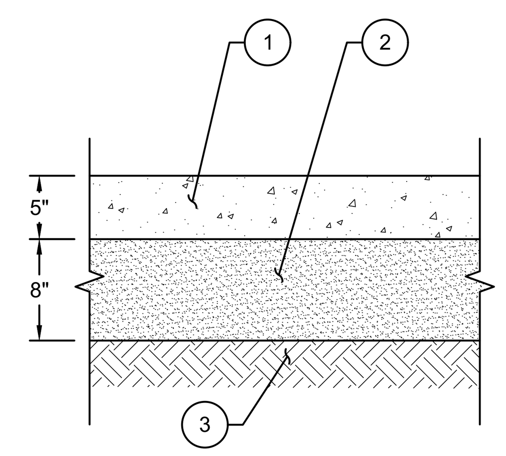

MARK | DESCRIPTION

(1) 5" REINFORCED PORTLAND CEMENT CONCRETE, TxDOT ITEM 360 (2014 EDITION), CLASS P, MINIMUM 3,200 PSI COMPRESSIVE STRENGTH AT 7 DAYS AND A MINIMUM 4,000 PSI COMPRESSIVE STRENGTH AT 28 DAYS WITH No. 3 BARS ON 18 INCH SPACING (OR No. 4 BARS ON 24 INCH SPACING), CENTER TO CENTER, EACH WAY (MAXIMUM 15-FOOT JOINT SPACING). ALL COARSE AGGREGATE SHALL CONSIST OF CRUSHED STONE.

(2) LIME TREATED SUBGRADE, TxDOT ITEM 260 (2014 EDITION), (MINIMUM 8% HYDRATED LIME BY DRY WEIGHT, MINIMUM 54 POUNDS PER SQUARE YARD), COMPACTED TO A MINIMUM OF 95% STANDARD PROCTOR DENSITY (ASTM D698), AT A MOISTURE CONTENT WITHIN THREE PERCENTAGE POINTS (±3%) OF OPTIMUM MOISTURE.

(3) REMOVE ALL VEGETATION AND DEBRIS PRIOR TO BEGINNING EMBANKMENT. SCARIFY GROUND SURFACE TO 8" AND COMPACT TO 95% OF MAXIMUM DENSITY PER ASTM D-698 STANDARD PROCTOR. PROOF ROLL COMPACTED SUBGRADE PER TxDOT ITEM 216 PRIOR TO PLACEMENT OF EMBANKMENT TO DETECT ANY AREAS OF WEAKNESS AND REPLACE WITH FOUNDATION MATERIAL AS DIRECTED BY THE CITY OF LONGVIEW. DURING COMPACTION, THE MOISTURE CONTENT OF THE SOIL SHALL BE AS FOLLOWS:

SOIL DESCRIPTION COMPACTION	PLASTICITY INDEX (PI)	MOISTURE CONTENT AT TIME OF
NON-PLASTIC SILTY SAND SOILS	PI<15	+/- 3%
SANDY CLAY SOILS	15<PI<25	-1% TO +3%
CLAY SOILS	PI>25	-1% TO +3%

INSTALL FILL FOR EMBANKMENT IN 8" LIFTS, COMPACTED IN HORIZONTAL LIFTS TO A MINIMUM OF 95% OF MAXIMUM DENSITY PER ASTM D-698 STANDARD PROCTOR. MOISTURE CONTENT SHALL BE AS DESCRIBED ABOVE DURING COMPACTION. SELECT FILL SHALL BE ON-SITE CLAYEY SANDY SOILS OR OFF-SITE MATERIAL. MATERIAL SHALL BE FREE OF ORGANIC MATTER OR ROCK FRAGMENTS LARGER THAN 2" IN ANY DIRECTION AND POSSES A PLASTICITY INDEX BETWEEN 10 AND 45, WITH A LIQUID LIMIT OF 70 OR LESS. THE FIRST LIFT OF FILL SHALL BE PLACED WITHIN 48 HOURS OF SATISFACTORY COMPACTION OF THE UNDERLYING SUBGRADE SOILS.

IF DIRECTED BY THE CITY OF LONGVIEW, BLEND THE SUBGRADE SOILS TO A DEPTH OF 12" OVER THE PROJECT AREA TO OBTAIN A UNIFORMLY CONSISTENT PLASTICITY INDEX PRIOR TO LIME OR CEMENT STABILIZATION.

5" CONCRETE PAVEMENT SECTION
NTS

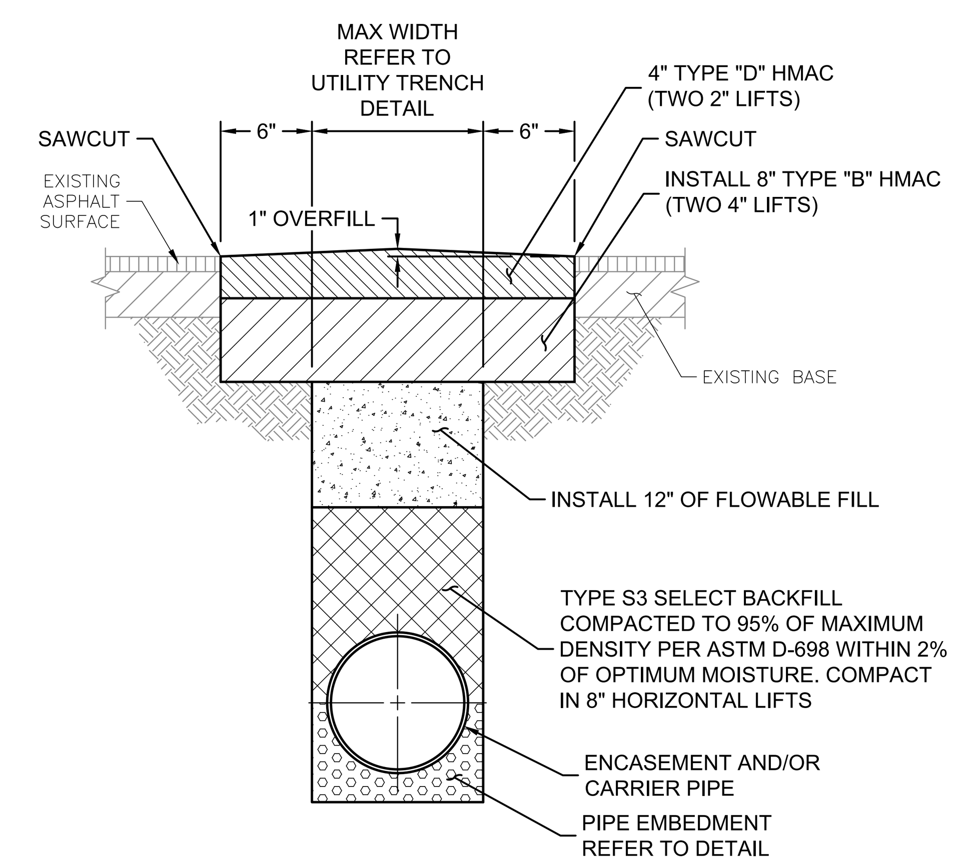

NOTE:

PROVIDE CRS-2H TACK COAT AT A RATE OF 0.10 GALLON PER SQUARE YARD BETWEEN EACH ASPHALT LIFT.

SAWCUT AND REPAIR ASPHALT ROAD PAVEMENT
NTS

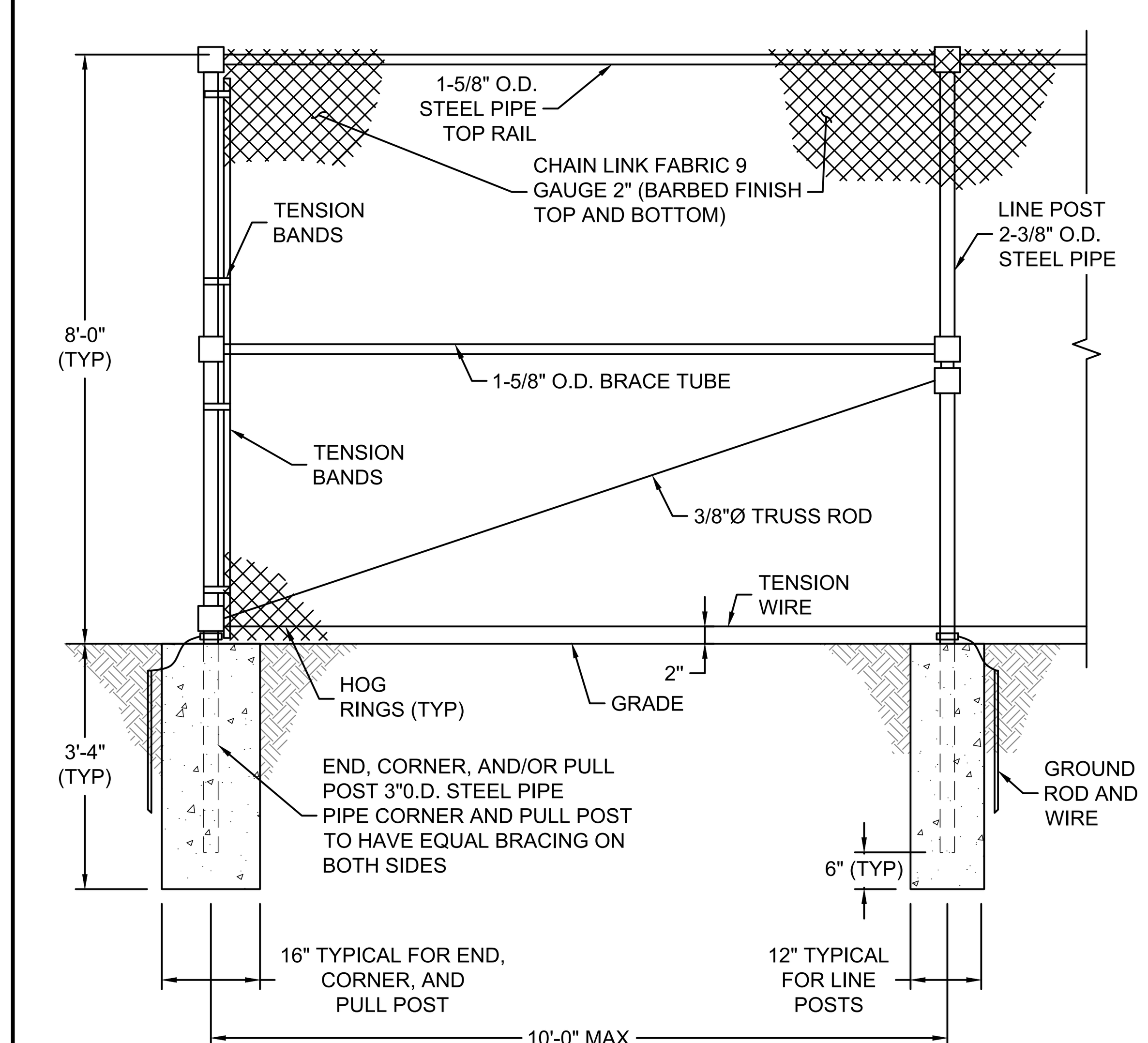

NOTES:

PLACE PULL POSTS AT 300' MAXIMUM SPACING.

CHAIN LINK FENCE MATERIAL SHALL BE VINYL COATED AND BLACK IN COLOR

ALTERNATE 1 : CHAINLINK FENCE DETAIL
NTS

Architects Design Group
Architects and Planners
I.S.K. Reeves V, F.A.I.A.
Ian A. Reeves, A.I.A.
Susan Gantt A.I.A., LEED-AP

333 N. Knowles Ave.
Winter Park, Florida 32789
(407) 647-1706

Corporate Registration Number: BR1177

In Association With:
KSA
140 E. Tyler Street, Suite 600
Longview, Texas 75601
T. 903-236-7700 F. 888-224-9418
www.ksaeng.com

TBPE FIRM REGISTRATION NO. F-1356

LONGVIEW FIRE DEPARTMENT No. 5

LONGVIEW, TEXAS

100% BID SET

The architect hereby expressly reserves his common law copyright and other property rights in these drawings. These drawings shall not be reproduced without written permission and consent of the architect, nor are they to be assigned to any party without first obtaining written permission and consent.

REVISIONS/ADDENDA

Number	Description	Date Issued

STATE OF TEXAS
MICHAEL A. BURNS
59990
6/5/2020

SHEET TITLE:
MISCELLANEOUS DETAILS III

scale: 1" = 20'
drawn: P C H
checked: A C L
approved: M A B
date: June 5, 2020
PROJECT NUMBER:
MI.2076
SHEET NUMBER:
C-109

\\ksa-server\P Drive\Projects\MI2076\008 CAD\30 Sheets\MI2076 - C - DT - MISC - 0001.dwg

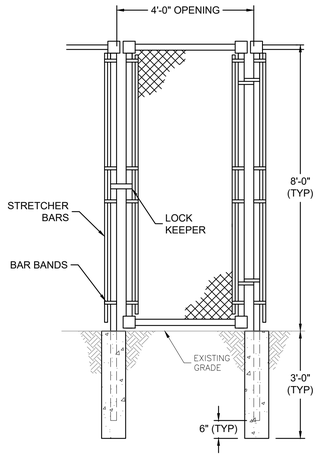

ALTERNATE 1: PEDESTRIAN GATE DETAIL

NTS

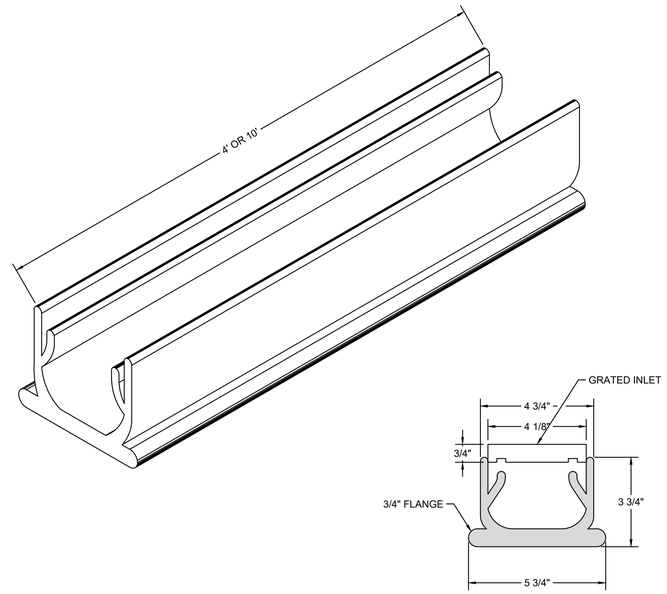

MANUFACTURER:
NDS
851 N. HARVARD AVENUE
LINDSAY, CA 93247
PH# 800.726.1994
WEBSITE: www.ndspro.com

PART#: 400 (4 FT), 400-10 (10 FT)
MATERIAL: PVC
COLOR: #400 (GRAY), AND #400-10 (GRAY)
FITS: 2" SCH 40 PIPE, 3" AND 4" SEWER AND DRAIN PIPE
WITH PROPER FITTINGS
UV INHIBITORS

DRAINAGE CHANNEL DETAIL

NTS

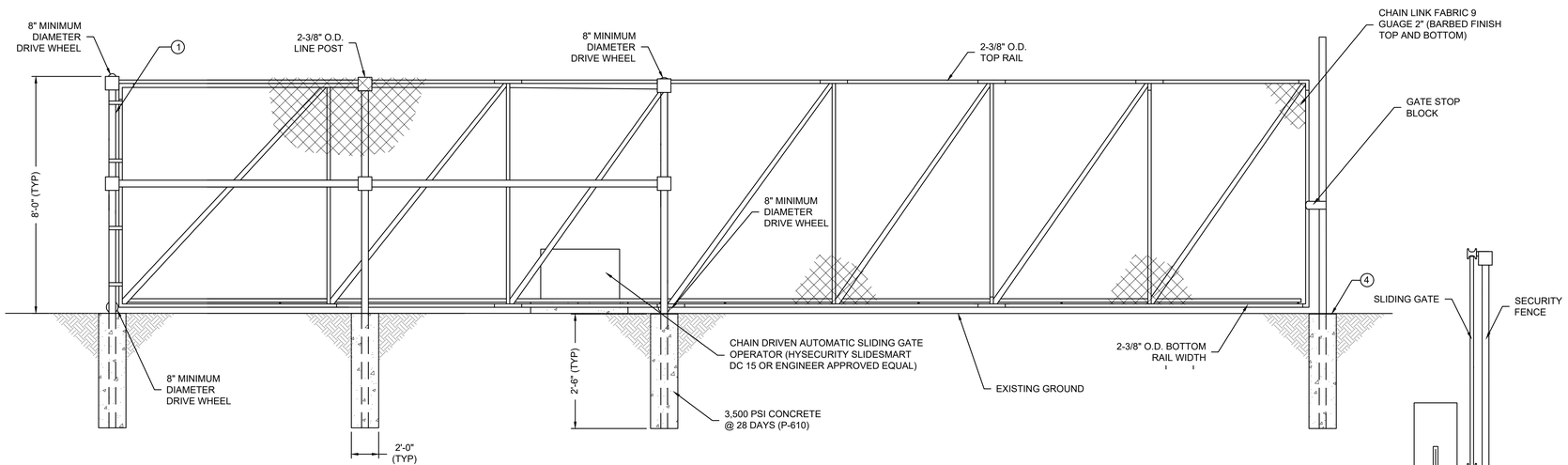

NOTES:

1. GATE POST 6-5/8" O.D. STEEL PIPE.
2. GATE FRAME WORK 1-7/8" O.D. ALUMINUM.
3. TOP OF CONCRETE AROUND THE POST SHALL BE SLOPED TO ALLOW POSITIVE DRAIN AWAY FROM POST.
4. THE CONTRACTOR'S CONSTRUCTION ENTRANCE/EXIT GATE SHALL BE A 24' MANUAL SLIDING GATE. THE CONSTRUCTION ENTRANCE/EXIT GATE SHALL BE AS SHOWN IN THE ABOVE DETAIL WITHOUT THE ELECTRICAL COMPONENTS.
5. THE AUTOMATIC AND MANUAL SLIDE GATES SHALL BE ALUMINUM GATES.
6. CHAIN LINK FENCE MATERIALS SHALL BE VINYL COATED AND BLACK IN COLOR

ALTERNATE 1: AUTOMATIC SLIDING SECURITY GATE DETAIL

NTS

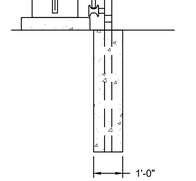

SECTION VIEW

N.T.S.

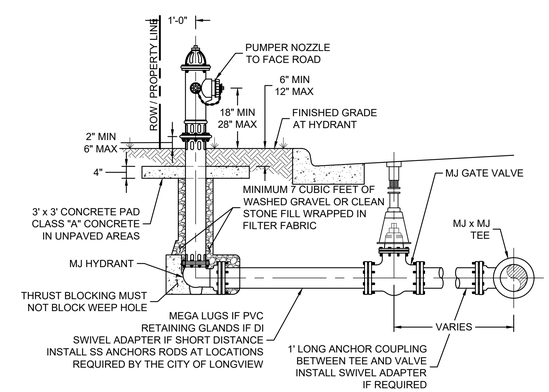

NOTES:

1. CITY OF LONGVIEW ACCEPTABLE FIRE HYDRANTS ASSEMBLIES AREA AS FOLLOWS: MUELLER A-423, AMERICAN DARLING B84 Btc, OR CLOW-MEDALLION.
2. ALL FIRE HYDRANTS SHALL CONFORM TO AWWA STANDARD SPECIFICATIONS FOR FIRE HYDRANTS FOR ORDINARY WATER WORKS SERVICE, C-502.
3. TYPICAL VALVE: ACTUAL VALVE LOCATION WILL DEPEND ON LOCATION OF WATER MAIN.
4. STANDARD BURY DEPTH 4' FEET.
5. SET FIRE HYDRANT ON THE LOT LINE EXTENDED WHEN POSSIBLE.
6. FIRE HYDRANTS SHALL BE YELLOW IN COLOR.
7. ALL MATERIALS SHALL BE AS LISTED ON THE CITY OF LONGVIEW APPROVED PRODUCTS LIST - LATEST VERSION

FIRE HYDRANT INSTALLATION

NTS

Architects Design Group

Architects and Planners

I.S.K. Reeves V, F.A.I.A.
Ian A. Reeves, A.I.A.
Susan Gantt A.I.A., LEED-AP

333 N. Knowles Ave.
Winter Park, Florida 32789
(407) 647-1706

Corporate Registration Number: BR1177

In Association With:

KSA

140 E. Tyler Street, Suite 600
Longview, Texas 75601
T. 903-236-7700 F. 888-224-9418
www.ksaeng.com

TBPE FIRM REGISTRATION NO. F-1356

LONGVIEW FIRE DEPARTMENT No. 5

LONGVIEW, TEXAS

100% BID SET

The architect hereby expressly reserves his common law copyright and other property rights in these drawings. These drawings shall not be reproduced without written permission and consent of the architect, nor are they to be assigned to any party without first obtaining written permission and consent.

REVISIONS/ADDENDA

Number	Description	Date Issued

STATE OF TEXAS
MICHAEL A. BURNS
59990
LICENSED
PROFESSIONAL ENGINEER
6/1/2020

SHEET TITLE:

MISCELLANEOUS DETAILS IV

scale: 1" = 20'
drawn: P C H
checked: A C L
approved: M A B
date: June 5, 2020

PROJECT NUMBER:

MI.2076

SHEET NUMBER:

C-110

\\ksa-server3\P Drive\Projects\MI2076\008 CAD\30 Sheets\MI2076 - C - DT - MISC - 0001.dwg

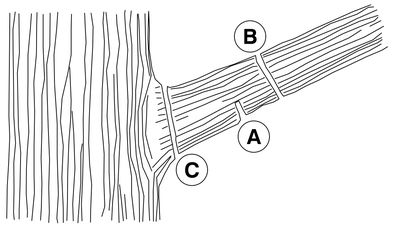

PROVIDED BY: NATIONAL ARBOR DAY FOUNDATION ILLUSTRATIONS

A. Make a partial cut from beneath at a point several inches away from the trunk.
B. Make a second cut several inches out and above the first cut to allow the limb to fall safely.
C. Complete the job with a final cut just outside the branch collar, the raised area that surrounds the branch where it joins the trunk.

TREE TOPPING:
It shall be unlawful for any person to top any tree without having a tree permit approved by the Landscape Administrator. If the Landscape Administrator determines that topping the tree is necessary because the tree has been severely damaged by storms or other causes, or is in a circumstance which makes other pruning practices impractical, the Landscape Administrator may issue a tree permit allowing topping of the tree.

PRUNING

N.T.S.

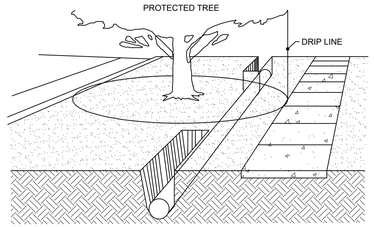

BORING:
Boring of utilities under protected trees shall be required in those circumstances where it is not possible to trench around the critical root zone of the protected tree. When required, the length of the bore shall be the width of the critical root zone at a minimum and shall be a minimum depth of 48 inches.

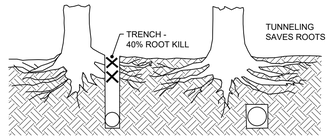

BORING AND TUNNELING

N.T.S.

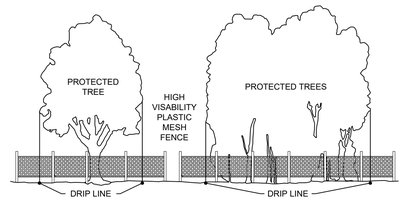

PROTECTIVE FENCING:
Orange vinyl construction fencing, chain link fencing, snow fencing, or other similar fencing at least four feet (4') high and supported at a maximum of ten (10') foot intervals by approved methods sufficient enough to keep the fence upright and in place. The fencing shall be of a highly visible material.

PRIOR TO CONSTRUCTION:
The Contractor or Subcontractor shall construct and maintain, for each protected tree or group of trees on a construction site, a protective fencing which encircles the outer limits of the critical root zone of the trees to protect it from construction activity. All protective fencing shall be in place prior to commencement of any site work, and remain in place until all exterior work has been completed.

TREE PROTECTION FENCING

N.T.S.

TREE PROTECTION PROCEDURES

GENERALLY: The following procedures shall apply to any tree for which protection is desired.

PROHIBITED ACTIVITIES IN CRITICAL ROOT ZONE: The following activities are prohibited within the limits of the critical root zone of any protected tree subject to the requirements of this ordinance.

a. Material Storage: No materials intended for use in construction, or waste materials accumulated due to excavation or demolition, shall be placed within the limits of the critical root zone of any protected tree.

b. Equipment Cleaning/Liquid Disposal: No equipment shall be cleaned, or other liquids deposited or allowed to flow overland, within the limits of the critical root zone of a protected tree. This includes, without limitation: paint, oil, solvents, asphalt, concrete, mortar or similar materials.

c. Tree Attachments: No signs, wires, or other attachments, other than those of a protective nature, shall be attached to any protected tree. Fencing attached to a tree via "U" nails or bent nails is allowed only if the fencing is parallel to, and contiguous with the tree.

d. Vehicular Traffic: No vehicular and/or construction, equipment, traffic, or parking shall take place within the limits of the critical root zone of any protected tree other than on existing street pavement. This restriction does not apply to single incident access within the critical root zone for purposes of clearing underbrush, establishing the building pad and associated lot grading, vehicular traffic necessary for routine utility maintenance, emergency restoration of utility service, or routine mowing operations.

e. Grade Changes: No grade changes shall be allowed within the limits of the critical root zone of any protected tree, unless adequate construction methods are approved by the Landscape Administrator.

f. Impervious Paving: No paving with asphalt, concrete, or other impervious materials that may reasonably be expected to kill a tree, shall be placed within the limits of the critical root zone of a protected tree except as otherwise allowed by the City.

PROHIBITED ACTIVITIES IN DRIP-LINE: No heavy equipment, including but not limited to trucks, tractors, trailers, bulldozers, bobcat tractors, trenchers, compressors, and hoists shall be allowed inside the drip-line of any protected tree on any construction site without the specific approval of the Landscape Administrator.

PROCEDURES REQUIRED PRIOR TO CONSTRUCTION: The following procedures shall be followed on all types of construction projects, including without limitation: residential, commercial, and municipal/public domain projects).

a. Protective Fencing: Prior to construction, the Contractor or Subcontractor shall construct and maintain, for each protected tree on a construction site, a protective fencing which encircles the outer limits of the critical root zone of the tree to protect it from construction activity. All protective fencing shall be in place prior to commencement of any site work, and remain in place until all exterior work has been completed.

b. Bark Protection: In situations where a protected tree remains in the immediate area of intended construction, and the Landscape Administrator determines the tree bark to be in danger of damage by construction equipment or other activity, the Contractor or Subcontractor shall protect the tree by enclosing the entire circumference of the tree with 2"X4" lumber encircled with wire or other means that do not damage the tree. The intent is to protect the bark of the tree against incidental contact by large construction equipment.

CONSTRUCTION METHODS:

a. Boring: Boring of utilities under protected trees shall be required in those circumstances where it is not possible to trench around the critical root zone of the protected tree. When required, the minimum length of the bore shall be the width of the critical root zone, and shall be a minimum depth of 48 inches.

b. Grade Change: In situations in which the Landscape Administrator approves the grade change within the critical root zone of a protected tree, the procedures noted in the City's standard detail sheet shall be followed.

c. Trenching: All trenching shall be designed to avoid trenching across the critical root zone of any protected tree, unless otherwise approved by the Landscape Administrator. The placement of underground utility lines shuch as electric, phone, gas, etc., is encouraged to be located outside of the critical root zone of protected trees. Trenching for an Irrigation system shall be placed outside of the critical root zone except the minimum required, single head supply line. This line is allowed to extend into the critical root zone perpendicular to the tree trunk and in a manner that has the least possible encroachment into the critical root zone.

d. Root Pruning: All roots two inches or larger in diameter, which are exposed as a result of trenching or other excavation, shall be cut off square with a sharp, medium-tooth saw and covered with pruning compound within two hours of initial exposure.

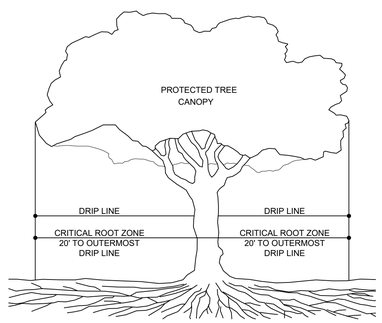

CRITICAL ROOT ZONE AREA

N.T.S.

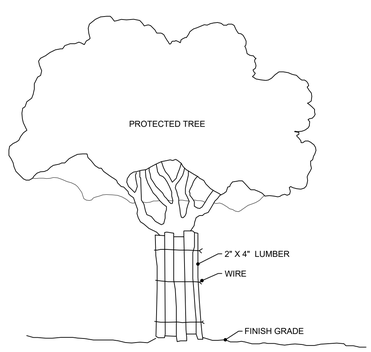

In situations where a protected tree remains in the immediate area of intended construction, and the tree may be in danger of being damaged by construction equipment or other activity, the Contractor or Subcontractor shall protect the tree with 2" x 4" lumber encircled with wire or other means that do not damage the tree. The intent is to protect the trunk of the tree against incidental contact by large construction equipment.

BARK PROTECTION

N.T.S.

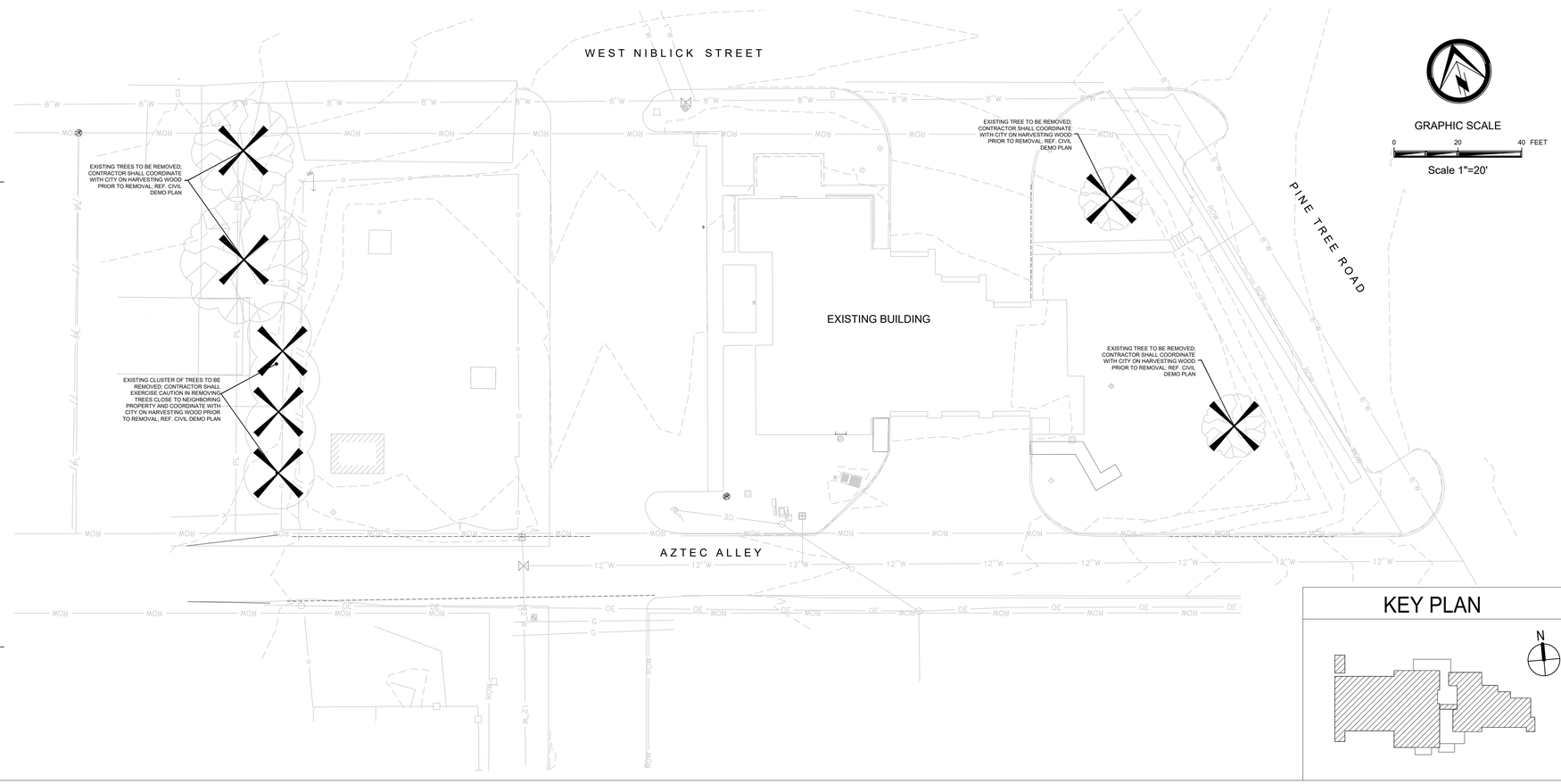

GRAPHIC SCALE
0 20 40 FEET
Scale 1"=20'

KEY PLAN

Architects Design Group

Architects and Planners

I.S.K. Reeves V, F.A.I.A.
Ian A. Reeves, A.I.A.
Susan Gantt A.I.A., LEED-AP

333 N. Knowles Ave.
Winter Park, Florida 32789
(407) 647-1706

Corporate Registration
Number: BR1177

studio 9612
LANDSCAPE ARCHITECTURE & PLANNING
po box 2517 lindale, texas 75771 | 979.220.8912

FIRESTATION No.5

City of Longview

100% BID SET

The architect hereby expressly reserves his common law copyright and other property rights in these drawings. These drawings shall not be reproduced without written permission and consent of the architect, nor are they to be assigned to any party without first obtaining written permission and consent.

REVISIONS/ADDENDA

Number	Description	Date Issued

REGISTERED LANDSCAPE ARCHITECT
SARAH R. ARVIN
2515
STATE OF TEXAS
06.05.2020

SHEET TITLE:

TREE REMOVAL & PROTECTION PLAN

scale: 1" = 20'-0"
drawn: SRA
checked: MCS
approved: SRA
date: June 5, 2020
PROJECT NUMBER:
2019.009
SHEET NUMBER:
L100

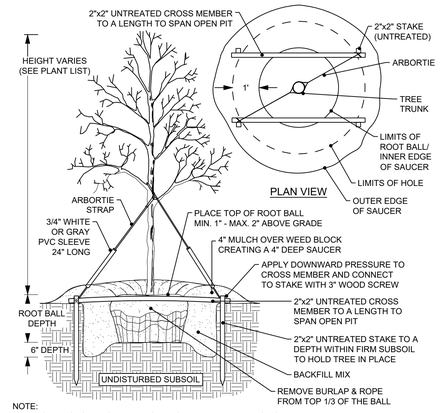

NOTE:
1. ARBORTIE SHOULD ONLY BE USED AS A REMEDIAL MEANS TO PLUMB A TREE WHEN THE PRIMARY BELOW GRADE STAKING CAN NO LONGER BE ADJUSTED EFFECTIVELY AND CONDITIONS ARE APPROVED BY THE LANDSCAPE ARCHITECT.
2. SEE LANDSCAPE NOTES FOR THE TYPE OF WEED BLOCK AND MULCH MATERIAL TO USE.

TREE PLANTING

N.T.S.

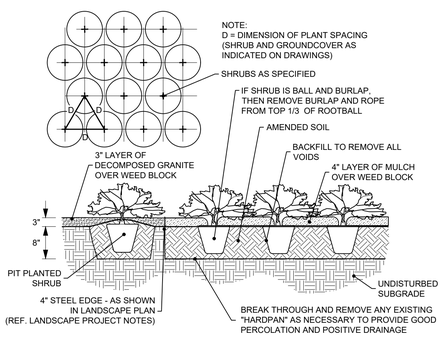

NOTE:
1. SEE LANDSCAPE NOTES FOR THE TYPE OF WEED BLOCK AND MULCH MATERIAL TO USE.
2. OMIT WEED BLOCK WHEN PLANT SPACING IS 18" O.C. OR LESS

SHRUB PLANTING AND SPACING

N.T.S.

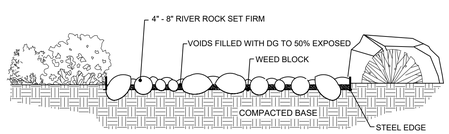

RIVER ROCK WITH COMPACTED BASE DETAIL

N.T.S.

TURF PROJECT NOTES

EROSION CONTROL:
Throughout the project and the maintenance period for turfgrass, it is the Contractor's responsibility to maintain the topsoil in place at specified grades. Topsoil and turfgrass losses due to erosion will be replaced by the Contractor until ESTABLISHMENT and ACCEPTANCE is achieved.

SOIL PREPARATION :
All slopes and areas disturbed by construction, except those occupied by buildings, structures, or paving shall be graded smooth and four (4") inches of topsoil applied. If adequate topsoil is not available onsite, the Contractor shall provide topsoil as approved by the Owner. The area shall be dressed to typical sections and plowed to a depth of five (5") inches. Soil shall be further prepared by the removal of debris, weeds and stones larger than 3/4 inch in diameter. After tillage and cleaning, all areas to receive turf shall be leveled, fine graded, and drug with a weighted spike harrow or float drag. The top two (2") inches shall be pulverized to provide a uniform bed for seeding or sod as described below.

GRASS SOD:
Common Bermuda sod shall be installed in all lawn areas labeled as such. At a minimum, three feet (3') of solid Common Bermuda sod shall be installed along all other impervious edges. This includes, but is not limited to: curbing, sidewalks, building foundation, storm water inlets, manholes, and planting bed perimeter treatments. Additional areas of sod installation will be as indicated on the design plans. Should installation occur between November and March, sod shall include an over-seed of Annual Rye for a grown-in appearance.

SPRING AND SUMMER PERMANENT GRASSING (May 15 through September 15):
Hydromulch seed with hulled Common Bermuda at a rate of 4 lbs/1000 sf. Seeding shall be accomplished immediately after bed preparation. Hydroseed mixture shall contain cellulose mulch applied at a rate of 2000 lbs/acre, with a maximum of 50 lbs/100 gallons of water. If seeding is delayed after mixing 0.5 - 2 hours, add 50% seed mix. If delay is longer than 2 hours, begin with new mixture.

FALL AND WINTER TEMPORARY GRASSING (September 15 through May 15):
Seed with annual rye at a rate of 10 lbs/1000 sf. After May 15, Contractor shall remove rye to effectively establish permanent seeding.

SEASONAL MOW AREA GRASSING (May 15 through September 15):
Hydromulch seed with hulled Coastal Bermuda at a rate of 15 lbs/acre. Seeding shall be accomplished immediately after bed preparation.

SEEDING ON SLOPES:
All slopes 4:1 or greater and subject to erosion shall have a fully biodegradable bonded fiber matrix (BFM) applied equal to 'Soil Guard'. The BFM is not hydro seeding and shall be installed by a contractor certified by the manufacturer to be trained in the proper procedures for mixing and application of the product. The BFM shall be mixed according to manufacturer's recommendations and contractor shall demonstrate "free liquid" test to inspector upon request. BFM shall be spray-applied at a rate of 3000-4000 lb/acre, utilizing standard hydraulically seeding equipment in successive layers as to exceed the benefits of an erosion control blanket with 100% coverage of all exposed soil. The BFM shall not be applied immediately before, during or after rainfall, such that the matrix will have opportunity to dry for up to 24 hours after installation to be 100% effective.

PROTECTION:
Protect newly seeded areas from excessive runoff and traffic until vegetation is established. Accumulated sediment deposited by runoff should be removed to prevent suppression of the vegetation. In addition, determine the source of excess sediment and implement appropriate BMPs to control the erosion. No heavy equipment shall be moved over the planted turf area unless the soil is again prepared, graded, leveled, and replanted. It will be the responsibility of the Contractor to protect all paving surfaces, curbs, utilities, plant materials, and any other existing improvements from damage. Any damages shall be repaired or replaced at no cost to the Owner.

IRRIGATION:
In the absence of an irrigation system or areas beyond the coverage limits of a permanent irrigation system, Contractor shall water sod/seed temporarily to develop adequate growth and establishment before regular maintenance begins. Turf shall be watered until firmly established.

Water shall be furnished by the Contractor with means and methods available to achieve acceptable turf. The water source shall be clean and free of industrial wastes or other substances harmful to the growth of the turf.

MAINTENANCE REQUIREMENTS:
Vegetation should be inspected regularly to ensure that plant material is established properly and remains healthy. Mowing, trimming and supervision of water applications shall be the responsibility of the Contractor until the Owner or Owner's Representative accepts and assumes regular maintenance.

ESTABLISHMENT AND ACCEPTANCE:
All disturbed areas being seeded shall receive topsoil as specified and be adequately established with turf such that any absence of water will not kill the turf, but promote a state of turf dormancy, until the next rainfall event.

Regardless of unseasonable climatic conditions or other adverse conditions affecting planting operations and the growth of the turf grass, it shall be the sole responsibility of the Contractor to establish a uniform stand of grass. UNIFORM STAND OF GRASS is defined as minimum 80% coverage per square foot (no bare areas).

Contractor to make a written request for inspection to Owner or Owner's representative a minimum of 5 days prior to the anticipated inspection date.

LANDSCAPE PROJECT NOTES

Notify Landscape Architect or designated representative of any layout discrepancies or any condition which may prohibit the installation as shown.

Verify and locate all utilities and site lighting conduits before landscape construction begins. Protection of all utilities is the responsibility of the Contractor.

All landscape planting areas illustrated shall be graded smooth with three inches (3") of topsoil and three inches (3") of compost applied and consistently blended (tilled) to a depth of nine inches (9"). If adequate or sufficient topsoil is not available on site, the Contractor shall provide topsoil per the specifications and approved by the Owner. To obtain final grade, excavation may be necessary to accept the required depth of topsoil/compost mix with surface dressing or mulch. All beds shall be crowned to anticipate settlement and ensure drainage without disrupting surrounding planned drainage paths. Any areas disturbed for any reason prior to final acceptance of the project shall be corrected by the Contractor at no additional expense to the Owner.

All landscaped areas will be irrigated with an underground automatic system.

Quantities shown on these plans are for reference only. Plant spacing is as indicated in the Plant Material List unless otherwise noted. The Contractor has full responsibility to provide coverage in all planting areas as specified.

All trees and shrubs shall be installed per planting details.

Trees shall be planted at least five feet (5') from any utility line or sidewalk, and to the outside of utility easements with a clear ten feet (10') around fire hydrants. Furthermore, planting within areas of turf shall give priority of location to irrigation. Trees, shall not be planted within five feet (5') of a spray head or ten feet (10') of a rotor. Remaining irrigation components shall respect the location of the illustrated landscape design. Shrubs, regardless of type, shall not be planted within thirty inches (30") of bed perimeters.

All plant material shall be maintained in a healthy and growing condition, and must be replaced with similar variety and size if damaged or removed. Container grown plant material is preferred, however ball and burlap material may be substituted as indicated in the plant material list.

All planting beds as designated shall be bordered by Owner approved four inch (4") steel edging w/ 3/16" min. thickness unless bed is bordered by concrete. Steel edging adjacent to decomposed granite beds shall have a ¼" min. thickness. Terminate edging flush with paved surface with no sharp corners exposed.

A four inch (4") dressing of Shredded hardwood mulch dark brown in color over a 4.1 oz, woven polypropylene, needle-punched fabric or equal weed barrier shall be used in all plant beds and around all trees. Single trees or shrubs shall be mulched to the outside edge of the saucer or landscape island (See planting details).

Fertilize all plants at the time of planting with 10-10-10 time release fertilizer.

All areas of river rock as designated shall be locally available and having an average diameter of four inches (4") minimum to six inches (6") maximum unless labeled otherwise. Contractor shall install to a depth of eight inches (8"). River rock shall be slightly recessed into the grade and set to ensure stability. Contractor select river rock colors that match existing river rock previously installed. Contractor shall submit samples to Landscape Architect for approval prior to installation.

LANDSCAPE NARRATIVE

The landscape design for the proposed Longview Fire Station Number 5 will meet minimum landscape requirements as outlined in Appendix A: Zoning Ordinance, Article 9- Area Regulations. Additional landscaping may be used to complement the buildings' architecture and outdoor features. A permanent irrigation system will be installed to provide water to all landscaped areas within property limits.

CITY OF LONGVIEW LANDSCAPE CALCULATIONS

	REQUIRED	PROVIDED
Lot Area Disturbed (total lot area 41,094 sf)		41,094 sf
Landscape Area Requirements - 10% of total lot area @41,094 sf	4,109 sf (10%)	8,549 sf (20.8%)
Landscape Area Requirements - 1 tree per 3,500 sf of total lot area @41,094 sf)	12	12
Landscape Area Requirements - 2 shrubs per 3,500 sf of total lot area @41,094 sf	24	*31

The proposed landscape plan provides 31 shrubs that meet the City's definition of a "woody perennial plant distinguished from herbaceous plants by its persistent woody stem".

PLANT MATERIAL LIST

SYM.	KEY	QTY.	COMMON NAME / SCIENTIFIC NAME	O.C.	ROOT	SIZE	HEIGHT	SPREAD	NOTES/COMMENTS
	LO	3	Empire Live Oak® / Quercus virginiana	N/A	B&B	3" cal.	12' min.	5' min.	Large Full Canopy, Healthy, Good Form, Strong Central Leader, 6' Clear Trunk Height, Matched across species
	WM	2	Southern Wax Myrtle / Myrica cerifera	N/A	B&B	3" cal.	10' min.	4' min.	Large Full Canopy, Healthy, Tree-Form, 3' Clear trunk height Multi-trunk, 3-cane minimum
	LG	2	Little Gem Magnolia / Magnolia grandiflora	N/A	Cont.	3" cal.	10' min.	4' min.	Large Full Canopy, Healthy, Good Form, Strong Central Leader, 5' Clear Trunk Height, Matched across species
	GM	13	'Regal Mist' Gulf Muhly Grass / Muhlenbergia capillaris	36"	Cont.	5 gal.	30" min.	24" min.	Healthy, Dense Growth, Rounded Form
	AS	7	Cast Iron Plant / Aspiditra elatior	30"	Cont.	5 gal.	24" min.	24" min.	Healthy, Dense Growth, Branching to Ground
	IH	15	Eleanor Tabor Indian Hawthorn / Raphiolepis indica	36"	Cont.	5 gal.	24" min.	24" min.	Healthy, Dense Growth, Rounded Form, Branching to Ground
	BX	16	Sprinter Boxwood / Buxus microphylla	24"	Cont.	5 gal.	18" min.	18" min.	Healthy, Dense Growth, Rounded form, Branching to Ground
	GL	42	Giant Evergreen Liriope / Liriope muscari	18"	Cont.	5 gal.	18" min.	18" min.	Healthy, Dense Growth
	CJ	179 SF	Creeping Jenny / Lysimachia nummularia	24"	Cont.	1 gal.	6" min.	15" min.	Healthy, Dense Growth. 3 Runners Min.
	AJ	125 SF	Asian Jasmine / Trachelospermum asiaticum	12"	Cont.	1 gal.	6" min.	15" min.	Healthy, Dense Growth. 3 Runners Min.
	SC	10 SF	Seasonal Color / N/A	N/A	Cont.	N/A	N/A	N/A	Healthy, Dense Growth, Colorful Blooms, Shade Tolerant
	RR	1009 SF	River Rock / Ref. Landscape Project Notes	N/A	N/A	N/A	N/A	N/A	4-6" Diameter; Ref. Landscape Project Notes

*Per City of Longview Minimum Landscape Requirements, all newly planted trees shall be a minimum container class #10 and shrubs shall be a minimum container class #3
In Accordance with the Current edition of The American Standard for Nursery Stock

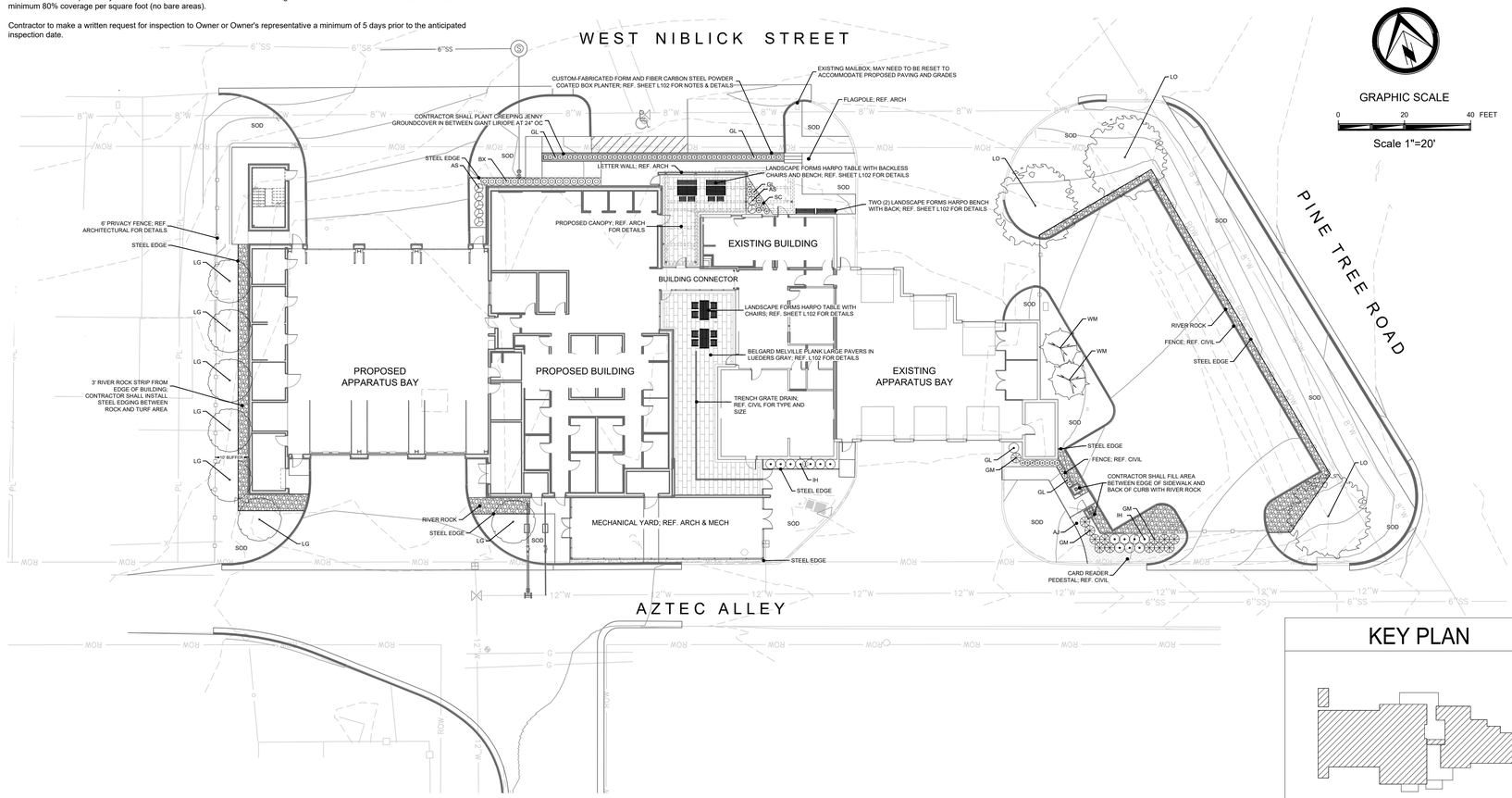

GRAPHIC SCALE
0 20 40 FEET
Scale 1"=20'

KEY PLAN

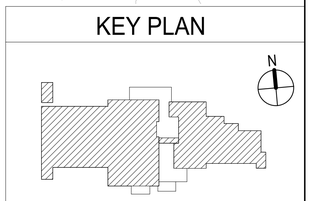

Architects Design Group

Architects and Planners

I.S.K. Reeves V, F.A.I.A.
Ian A. Reeves, A.I.A.
Susan Gantt A.I.A., LEED-AP

333 N. Knowles Ave.
Winter Park, Florida 32789
(407) 647-1706

Corporate Registration Number: BR1177

studio 9612
LANDSCAPE ARCHITECTURE & PLANNING
po box 2517 lindale, texas 75771 | 979.220.8912

FIRESTATION No.5

City of Longview

100% BID SET

The architect hereby expressly reserves his common law copyright and other property rights in these drawings. These drawings shall not be reproduced without written permission and consent of the architect, nor are they to be assigned to any party without first obtaining written permission and consent.

REVISIONS/ADDENDA

Number	Description	Date Issued

REGISTERED LANDSCAPE ARCHITECT — SARAH R. KAHN — 2515 — STATE OF TEXAS
06.05.2020

SHEET TITLE:
LANDSCAPE PLAN

scale: 1" = 20'-0"
drawn: SRA
checked: MCS
approved: SRA
date: June 5, 2020
PROJECT NUMBER:
2019.009
SHEET NUMBER:
L101

Harpo Backless bench, 24in length, wide wood slats

Product Drawing — www.landscapeforms.com — Ph: 800.521.2546 — Date: 6/18/2014

SURFACE MOUNT OPTION: (4) 1/4" THICK ANCHOR TABS WITH Ø1/2" HOLE FOR ANCHORING, NON-CORROSIVE ANCHORING HARDWARE SUPPLIED BY OTHERS.
EMBEDDED OPTION: INCLUDES (4) 10mm x 120mm THREADED RODS

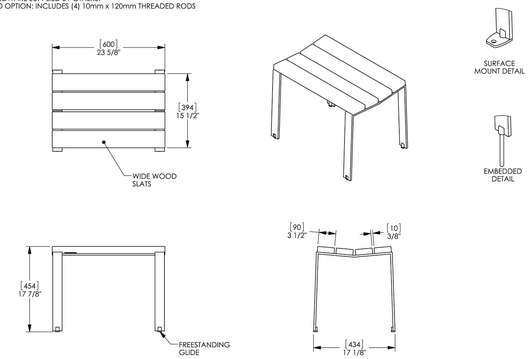

landscapeforms — Drawing: AX101-01 — Dimensions are in inches [mm]

CONFIDENTIAL DRAWING INFORMATION CONTAINED HEREIN IS THE PROPERTY OF LANDSCAPE FORMS, INC. INTENDED USE IS LIMITED TO DESIGN PROFESSIONALS, SPECIFYING LANDSCAPE FORMS, INC. PRODUCTS AND THEIR DIRECT CLIENTS. DRAWING IS NOT TO BE COPIED OR DISCLOSED TO OTHERS WITHOUT THE CONSENT OF LANDSCAPE FORMS, INC. © 2014 LANDSCAPE FORMS, INC. ALL RIGHTS RESERVED.

Harpo Backed bench, 24in length, wide wood slats

Product Drawing — www.landscapeforms.com — Ph: 800.521.2546 — Date: 6/18/2014

SURFACE MOUNT OPTION: (4) 1/4" THICK ANCHOR TABS WITH Ø1/2" HOLE FOR ANCHORING, NON-CORROSIVE ANCHORING HARDWARE SUPPLIED BY OTHERS.
EMBEDDED OPTION: INCLUDES (4) 10mm x 120mm THREADED RODS

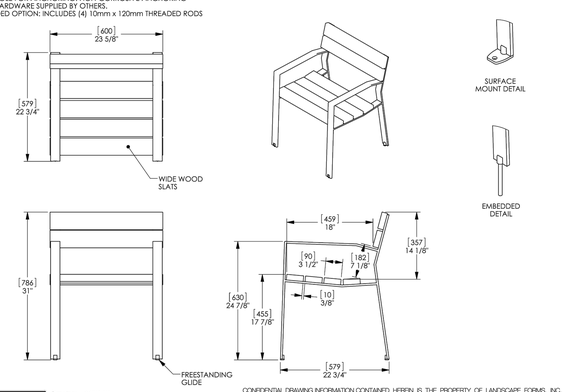

landscapeforms — Drawing: AX201-01 — Dimensions are in inches [mm]

CONFIDENTIAL DRAWING INFORMATION CONTAINED HEREIN IS THE PROPERTY OF LANDSCAPE FORMS, INC. INTENDED USE IS LIMITED TO DESIGN PROFESSIONALS, SPECIFYING LANDSCAPE FORMS, INC. PRODUCTS AND THEIR DIRECT CLIENTS. DRAWING IS NOT TO BE COPIED OR DISCLOSED TO OTHERS WITHOUT THE CONSENT OF LANDSCAPE FORMS, INC. © 2014 LANDSCAPE FORMS, INC. ALL RIGHTS RESERVED.

Harpo Table, 1.75m (69in), wood, surface mount

Product Drawing — www.landscapeforms.com — Ph: 800.521.2546 — Date: 12/14/2017

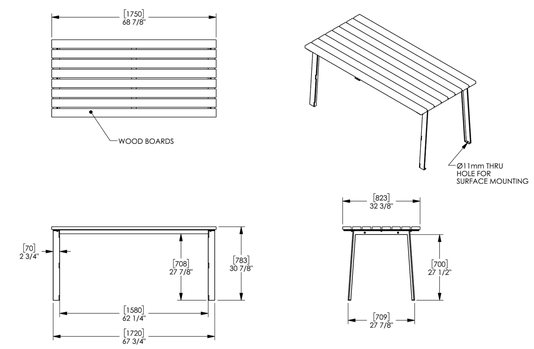

landscapeforms — Drawing: AX400-01 — Dimensions are in inches [mm]

CONFIDENTIAL DRAWING INFORMATION CONTAINED HEREIN IS THE PROPERTY OF LANDSCAPE FORMS, INC. INTENDED USE IS LIMITED TO DESIGN PROFESSIONALS, SPECIFYING LANDSCAPE FORMS, INC. PRODUCTS AND THEIR DIRECT CLIENTS. DRAWING IS NOT TO BE COPIED OR DISCLOSED TO OTHERS WITHOUT THE CONSENT OF LANDSCAPE FORMS, INC. © 2010 LANDSCAPE FORMS, INC. ALL RIGHTS RESERVED.

Harpo Backless bench, 69in length, wide wood slats

Product Drawing — www.landscapeforms.com — Ph: 800.521.2546 — Date: 6/18/2014

SURFACE MOUNT OPTION: (4) 1/4" THICK ANCHOR TABS WITH Ø1/2" HOLE FOR ANCHORING, NON-CORROSIVE ANCHORING HARDWARE SUPPLIED BY OTHERS.
EMBEDDED OPTION: INCLUDES (4) 10mm x 120mm THREADED RODS

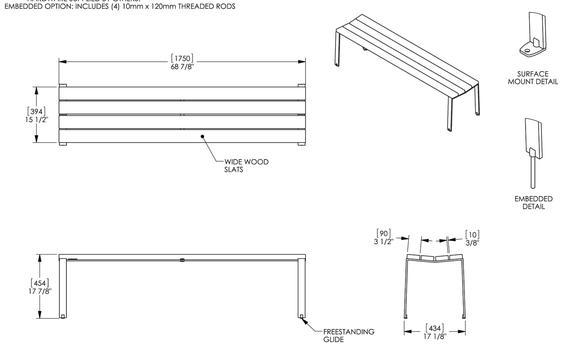

landscapeforms — Drawing: AX104-01 — Dimensions are in inches [mm]

CONFIDENTIAL DRAWING INFORMATION CONTAINED HEREIN IS THE PROPERTY OF LANDSCAPE FORMS, INC. INTENDED USE IS LIMITED TO DESIGN PROFESSIONALS, SPECIFYING LANDSCAPE FORMS, INC. PRODUCTS AND THEIR DIRECT CLIENTS. DRAWING IS NOT TO BE COPIED OR DISCLOSED TO OTHERS WITHOUT THE CONSENT OF LANDSCAPE FORMS, INC. © 2014 LANDSCAPE FORMS, INC. ALL RIGHTS RESERVED.

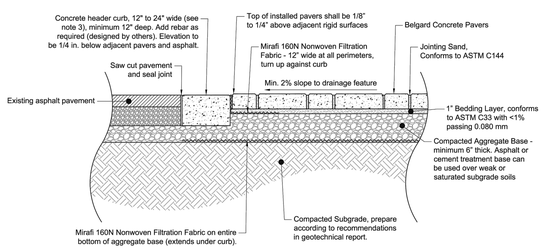

Design Notes:

1. Cross section as shown is suitable for pedestrian and vehicular applications. Paver dimensions subject to aspect and plan ratio requirements. Contact Belgard Commercial for product selection guidance based on the intended traffic loading.
2. Depth of aggregate base subject to site specific conditions (traffic loading, soil conditions, groundwater levels, climatic conditions). Contact Belgard Commercial for design assistance.
3. When traffic flow is perpendicular to the direction of the header, the width of the header curb should be sufficient to ensure that a bouncing tire caused by differential settlement will land on the header and not skip over it.
4. When using geotextile separation fabric, consult with the manufacturer to ensure the material has good drainage characteristics and is not prone to clogging.
5. Drain pipes may be required within the aggregate base depending on the permeability of the subgrade soils. Verify drainage needs with the geotechnical engineer. Ensure drain pipes are able to daylight via gravity flow to surface, or connect to catch basin.
6. Technisealed HP Nextgel jointing sand conforming to ASTM C144 may be used in pedestrian and light vehicular applications. Please contact Belgard Commercial for design assistance.

BELGARD — belgardcommercial.com, 877-235-4273, details@belgard.com	This drawing is for illustrative purposes only and should not be used for construction without the signature of a registered professional engineer.	Belgard Standard Paving Detail Curb Transition Sand Set on Aggregate Base	Scale: N.T.S. Date: 11/30/2018	Drawn by: MAH Drawing number: ICP_6

FORM AND FIBER | TECHNICAL SHEET

BOX SERIES ALUMINUM POWDER COATED PLANTERS

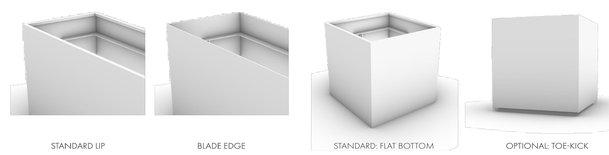

CONSTRUCTION

1. The Box Series Aluminum Powder Coated Planters are constructed of ASTM B-209 5052-H32 grade Aluminum. Planters are fabricated using .090, .125, .390, and .250 thicknesses.

2. Oversized boxes are constructed with internal reinforcement comprised of horizontal stiffeners, and vertical gussets. Specific dimensions for spacing of internal reinforcement is submitted via shop drawing for approval, prior to construction.

3. Planters are manufactured with standard 1", 1.5", or 2" drain holes or no drain holes. Quantity and placement as directed by Purchaser. Holes are cut to nominal O.D. for standard PVC pipe trade sizes.

4. If boxes with internally raised bases are specified, heat signatures may read through powder coat finish due to material thickness. *

STANDARDS

1. Standard lip for .090 and .125 thick boxes = 1" wide lip + 3/4" return
   Standard lip for .390 thick boxes = 1-1/2" wide lip + 3/4" return
   Standard lip for .250 thick boxes = 2" wide lip with no return

POWDER COAT FINISH

1. Planters are coated with an exterior grade polyester powder coat finish, available in standard stock and non-standard stock RAL colors. Marine grade finish can be provided for an upcharge per unit.

2. Non-standard stock RAL colors and metallics are available and may require an additional up-charge per unit.

POWDER COAT STANDARD STOCK COLORS

CUSTOMIZATION

1. Fabrication of F&F Aluminum Powder Coated Boxes can be customized to designer specified sizes for L X W X H. Boxes will be priced on labor, material, and thickness.

OPTIONS

1. The following options are available in the fabrication of F&F Aluminum Powder Coated Boxes. Additional charges may apply:

X Standard lip	____ Blade edge	____ Internally raised base*
X Flat base	____ Toe-kick base	____ Industrial casters
____ Stainless steel leveling feet		____ Glides

ALUMINUM POWDER COATED BOX SERIES STANDARD SIZES

PRODUCT ID	LENGTH	WIDTH	HEIGHT	MATERIAL	THICKNESS	AVG. WT.
BX_A 242418	24"	24"	18"	aluminum	0125	28 lbs
BX_A 242424	24"	24"	24"	aluminum	0125	35 lbs
BX_A 242436	24"	24"	36"	aluminum	0125	49 lbs
BX_A 303018	30"	30"	18"	aluminum	0125	39 lbs
BX_A 303024	30"	30"	24"	aluminum	0125	47 lbs
BX_A 303030	30"	30"	30"	aluminum	0125	56 lbs
BX_A 363624	36"	36"	24"	aluminum	0125	66 lbs
BX_A 363630	36"	36"	30"	aluminum	0125	78 lbs
BX_A 363636	36"	36"	36"	aluminum	0190	138 lbs
BX_A 481824	48"	18"	24"	aluminum	0125	56 lbs
BX_A 482424	48"	24"	24"	aluminum	0125	64 lbs
BX_A 482430	48"	24"	30"	aluminum	0125	76 lbs
BX_A 484836	48"	48"	36"	aluminum	0190	196 lbs
BX_A 484848	48"	48"	48"	aluminum	0190	245 lbs
BX_A 601824	60"	18"	24"	aluminum	0125	68 lbs
BX_A 602424	60"	24"	24"	aluminum	0125	76 lbs
BX_A 602430	60"	24"	30"	aluminum	0125	91 lbs
BX_A 601836	60"	18"	36"	aluminum	0125	95 lbs
BX_A 721824	72"	18"	24"	aluminum	0190	119 lbs
BX_A 722424	72"	24"	24"	aluminum	0190	135 lbs
BX_A 722430	72"	24"	30"	aluminum	0190	159 lbs
BX_A 722436	72"	24"	36"	aluminum	0190	184 lbs
BX_A 724848	72"	48"	48"	aluminum	0190	318 lbs
BX_A 961818	96"	18"	18"	aluminum	0190	125 lbs
BX_A 961824	96"	18"	24"	aluminum	0190	153 lbs

WEBSITE www.formandfiber.com — ORDERS 888-314-8852 — EMAIL info@formandfiber.com

Form and Fiber Inc. All rights reserved. © 2020. | Made in the USA.

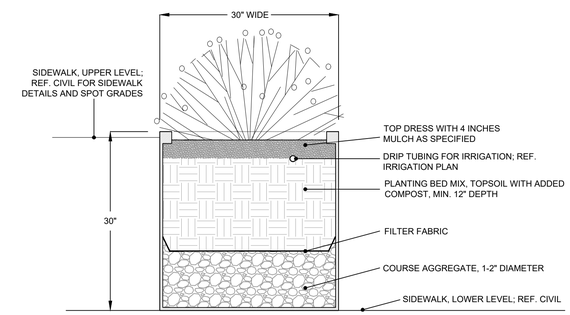

NOTE TO CONTRACTOR: CONTACT LIGHTSPEK (214.519.1064) AND REFERENCE QUOTE #19235 FOR INFORMATION. PLANTER IS A CUSTOM 73' LENGTH X 30" WIDE X 30" HEIGHT FORM & FIBER CARBON STEEL PLANTER; CONTRACTOR SHALL SUBMIT COLOR SAMPLES AND SHOP DRAWING TO LANDSCAPE ARCHITECT FOR FINAL SELECTION PRIOR TO ORDERING AND INSTALLATION. CONTRACTOR SHALL COORDINATE WITH FORM & FIBER ON DRAINAGE HOLES REQUIRED TO FACILITATE POSITIVE DRAINAGE AND RECEIVE IRRIGATION.

FORM AND FIBER BOX SERIES ALUMINUM POWDER COATED PLANTER DETAIL

N.T.S.

NOTE TO BIDDING CONTRACTOR

Exterior Site Furnishings as manufactured by Landscape Forms are shown for reference only and are NOT to be included in the Landscape & Irrigation bids. Exterior furnishings will be accommodated through the Owner's FF&E budget.

KEY PLAN

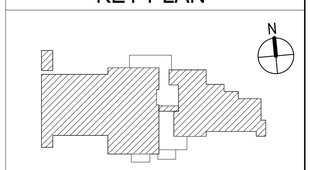

Architects Design Group

Architects and Planners

I.S.K. Reeves V, F.A.I.A.
Ian A. Reeves, A.I.A.
Susan Gantt A.I.A., LEED-AP

333 N. Knowles Ave.
Winter Park, Florida 32789
(407) 647-1706

Corporate Registration Number: BR1177

studio 9612 LANDSCAPE ARCHITECTURE & PLANNING
po box 2517 lindale, texas 75771 | 979.220.8912

FIRESTATION No.5

City of Longview

100% BID SET

The architect hereby expressly reserves his common law copyright and other property rights in these drawings. These drawings shall not be reproduced without written permission and consent of the architect, nor are they to be assigned to any party without first obtaining written permission and consent.

REVISIONS/ADDENDA

Number	Description	Date Issued

REGISTERED LANDSCAPE ARCHITECT — SARAH R. AKIN — 2515 — STATE OF TEXAS

06.05.2020

SHEET TITLE:

LANDSCAPE DETAILS

scale: 1" = 20'-0"
drawn: SRA
checked: MCS
approved: SRA
date: June 5, 2020

PROJECT NUMBER:

2019.009

SHEET NUMBER:

L102

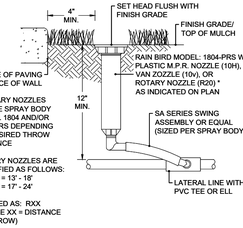

NOTE:
1. MAY NOT BE USED IN LANDSCAPE AREAS LESS THAN FORTY-EIGHT INCHES (48") IN LENGTH OR WIDTH (VERIFY WITH LOCAL CITY ORDINANCE).
2. IN AREAS WITH ELEVATION CHANGES, CONTRACTOR SHALL SPECIFY SEAL-A-MATIC (SAM) ON THE ZONES LOWEST HEADS.

TURF POP-UP SPRAY HEAD

N.T.S.

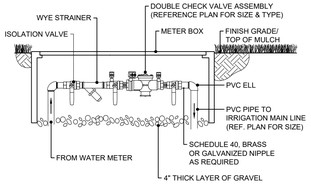

NOTE:
1. INSTALL BACKFLOW PREVENTER AS REQUIRED BY LOCAL CODES AND HEALTH DEPARTMENT. VERIFY LOCAL REQUIREMENTS PRIOR TO INSTALLATION. PRIOR TO BACKFLOW PREVENTER, INSTALL A NOMINALLY SIZED ISOLATION VALVE.

DOUBLE CHECK ASSEMBLY

N.T.S.

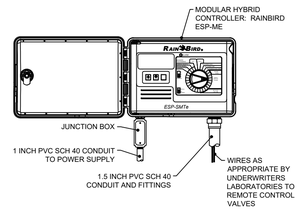

NOTE:
1. WEATHER SENSORS ARE TO BE PROVIDED AS REQUIRED BY LOCAL CODES. VERIFY LOCAL REQUIREMENTS PRIOR TO INSTALLATION.

ESP-ME CONTROLLER - OUTDOOR MODEL

N.T.S.

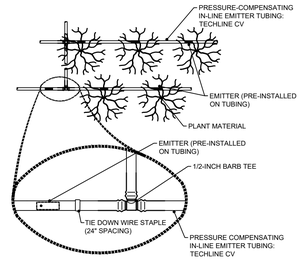

TECHLINE CV DRIPLINE

N.T.S.

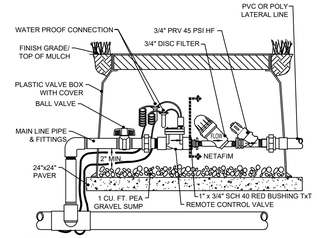

NOTE:
1. DESIGN TO ACCOMMODATE GPM BETWEEN 3.5 - 17.6.
2. FURNISH NOMINALLY SIZED BALL VALVE WITHIN SAME BOX.

LOW VOLUME CONTROL ASSEMBLY

N.T.S.

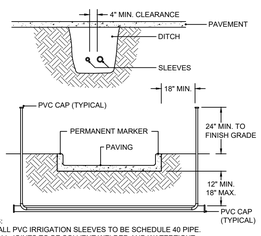

NOTES:
1. ALL PVC IRRIGATION SLEEVES TO BE SCHEDULE 40 PIPE.
2. ALL JOINTS TO BE SOLVENT WELDED AND WATERTIGHT.
3. WHERE THERE IS MORE THAN ONE SLEEVE, EXTEND THE SMALLER SLEEVE TO 24-INCHES MINIMUM ABOVE FINISH GRADE.
4. MECHANICALLY TAMP TO 95% PROCTOR.
5. SLEEVE LOCATIONS SHALL BE MARKED ONTO THE TOP OF CURB WITH A SAWCUT OF TWO PARALLEL LINES THAT ARE 2" LONG AND 1" APART.

IRRIGATION PVC SLEEVES

N.T.S.

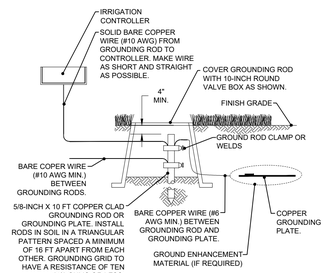

GROUNDING GRID WITH PLATE

N.T.S.

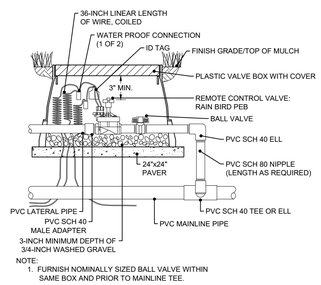

NOTE:
1. FURNISH NOMINALLY SIZED BALL VALVE WITHIN SAME BOX AND PRIOR TO MAINLINE TEE.

PEB REMOTE CONTROL VALVE

N.T.S.

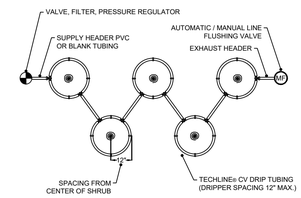

MULTIPLE SHRUB RING DETAIL

N.T.S.

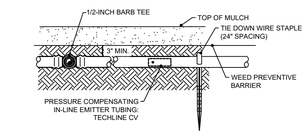

DRIPLINE TECHLINE CV

N.T.S.

IRRIGATION SLEEVE NOTES

Piping and control wires shall be installed in separate sleeves under paving. Refer to the irrigation plan for sleeve size and location.

Sleeve elevation shall be twenty-four (24") inches below top of pavement.

Sleeves shall extend one (1') foot beyond the edge of pavement and be staked for location.

All sleeves shall be Schedule 40 PVC pipe, capped on both ends, and sized at least two times larger than the diameter of the pipe inside the sleeve. Sleeve locations shall be marked onto the top of curb with a saw-cut of two parallel lines that are two (2") inches long and one (1") inch apart.

The Contractor responsible for the installation of sleeves shall also be responsible to locate any sleeve which cannot be found during the installation of the irrigation system.

IRRIGATION GENERAL NOTES

Refer to Project Specifications and plan details for all Irrigation work.

Notify Irrigation Designer of any layout discrepancies prior to proceeding with irrigation and landscape.

The Contractor shall not willfully install the irrigation system as shown on the drawings, when it is obvious that field obstructions, unknown to the Designer, may not have been considered in the design. The Contractor shall be responsible to notify the Irrigation Designer of the site conditions, or assume full responsibility for any and all revisions necessary.

Locate all utilities and site lighting conduits before irrigation installation begins.

Irrigation Contractor shall procure all permits, licenses, and give all necessary notices throughout the duration of the project.

The Contractor shall be a Registered Licensed Irrigator of good standing in the State of Texas.

The Contractor shall be responsible for all plant material upon acceptance and through the warranty period for damage due to irrigation system failure.

All aspects of the irrigation installation shall conform with governing authorities, codes, and ordinances.

Disturbed areas in need of turf establishment may exist beyond the coverage limits of the permanent irrigation system. In those disturbed areas, the Contractor shall determine the temporary means to germinate/establish necessary turf. The General Contractor is encouraged to begin turf establishment immediately upon final grade in accordance with and to satisfy the SWPPP.

IRRIGATION PROJECT NOTES

The location of mainline and valves on this plan may be shown in paved areas for clarity only. Irrigation elements have been shown as accurately as possible without the forfeit of design clarity and intent. Contractor is to install all pipe and valves within pervious areas. All pipe and wire that cross under paving shall be installed within separate sleeves as specified.

The Irrigation Contractor shall test existing static water pressure onsite prior to construction. Static water pressure for the site was unavailable at time of design. The irrigation system for this site is designed to operate with a pressure of sixty (60 psi) pounds per square inch. Should design pressure for the irrigation system be higher than the existing pressure of the site, the Irrigation Contractor shall notify the Irrigation Designer.

The Irrigation Contractor shall coordinate the location of the controller and sensors with the General Contractor. 120 volt electrical service to power the irrigation controller shall be provided by the General Contractor at the location shown on this plan.

DO NOT INSTALL IRRIGATION at monument sign until sign has been installed.

The type of backflow prevention device shall be determined by the governing authority. An isolation valve shall be provided between the water meter and backflow prevention device.

All calculations for this irrigation system are based on product and equipment information provided by RainBird. Installation of the products specified shall not exceed manufacturer recommendations.

The irrigation system automatic controller shall be Rain Bird ESP-Me Smart Modular Controller - Outdoor model w/ rain and freeze sensors.

Irrigation remote control valves shall be 2" Rain Bird PEB- PRS - D with pressure reducing capabilities as indicated and 1" Rain Bird XCZ-PRB. Prior to all remote control valves, install a nominally sized ball valve within the same box.

Irrigation spray heads located in turf areas shall be Rain Bird 1804-PRS spray bodies with matched precipitation rate nozzles. Fixed pattern nozzles (Labeled as 10H), and HE-VAN nozzles (Labeled as 10v) are as indicated on this plan.

Irrigation Quick Coupling Valves shall be Rain Bird 33-DNP. Prior to all Quick Coupling Valves, install a nominally sized ball valve within the same box. QC Valves shall remain off when not in use.

All control valves, gate valves, quick coupling valves, and control wire splice locations shall be installed in approved boxes with covers.

All 24-volt lead Valve Control wire shall be sized per manufacturer guidelines by the contractor according to actual field distance. All valve control wire under pavement shall be in a separate conduit. All connections shall be water-proof, kept to a minimum, and located in an approved box.

LANDSCAPE DRIPLINE MAXIMUM LATERAL LENGTHS - TECHLINE CV

Inlet Pressure	Maximum Lateral Length (Feet)									
PSI	12" Spacing				18" Spacing				24" Spacing	
20	335	247	194	148	475	348	275	209	348	266
25	420	308	243	184	592	435	344	262	436	332
35	528	388	305	232	748	550	434	329	550	419
45	605	444	350	266	857	630	497	378	632	481
Flow (GPH)	0.26	0.4	0.6	0.9	0.26	0.4	0.6	0.9	0.6	0.9

NETAFIM - SUGGESTED APPLICATION RATE

FLOW RATE (GPH)	0.4	0.4	0.4	0.4	0.4	0.4	0.4	0.4	0.4	0.4
DRIPPER SPACING (Inches)	12	12	12	18	18	18	24	24	24	24
LATERAL SPACING (Inches)	12	18	24	12	18	24	12	18	24	
APPLICATION RATE (In/Hr)	0.64	0.43	0.32	0.43	0.29	0.21	0.32	0.21	0.16	
TIME TO APPLY (144" Min)	23	35	47	35	53	70	47	70	93	

Note: Application Rate = (231.1 x GPH) / (Dripper Spacing x Lateral Spacing)

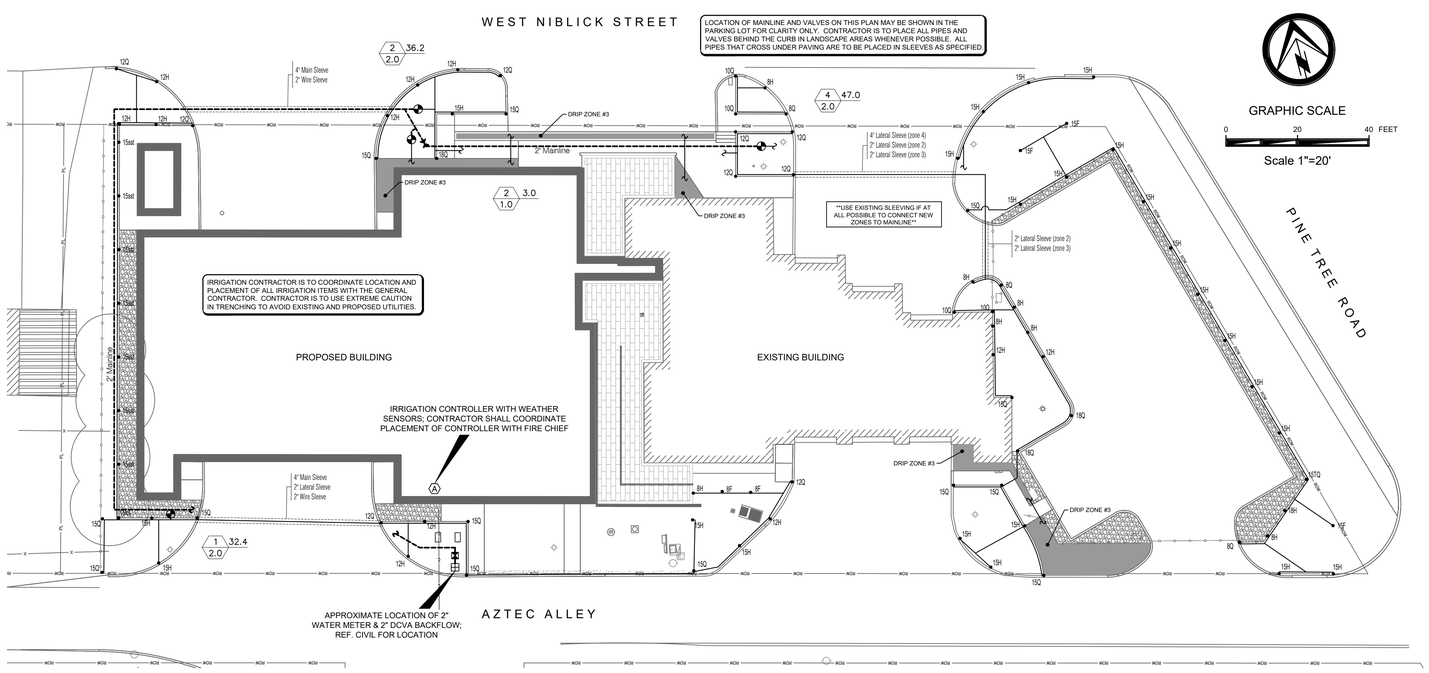

IRRIGATION ZONE INFORMATION

VALVE	SIZE	GPM	TYPE	RUN TIME
1	2" PEB	32.4	SPRAY	___ min
2	2" PEB	36.2	SPRAY	___ min
3	1" LFV	3.0	DRIP	___ min
4	2" PEB	47.0	SPRAY	___ min

IRRIGATION LEGEND

- Existing Single 2" Water Meter (Contractor to Verify)
- Proposed 2" Double Check Valve Assembly
- Proposed ESPE-ME RainBird Controller
- Rain Bird PEB Control Valve (See Plan for size)
- 2" Isolation Valve
- 10H Rain Bird 1804 PRS Spray Type
- 15strt Rain Bird 15 Strip Series
- 1¼" Lateral Pipe Size Indication
- Class 200 PVC Irrigation Lateral
- 2" Mainline — 2" PVC Irrigation Mainline
- 4" Sleeve — Schedule 40 PVC Sleeve (See Plan for size)
- 1 / 2.0 — 33.0 — Valve sequence, size, and gallons per minute

KEY PLAN

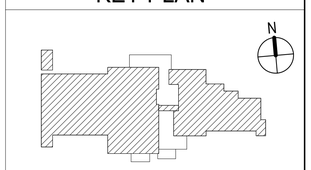

Architects Design Group

Architects and Planners

I.S.K. Reeves V, F.A.I.A.
Ian A. Reeves, A.I.A.
Susan Gantt A.I.A., LEED-AP

333 N. Knowles Ave.
Winter Park, Florida 32789
(407) 647-1706

Corporate Registration Number: BR1177

studio 9612 LANDSCAPE ARCHITECTURE & PLANNING
po box 2517 lindale, texas 75771 | 979.220.8912

FIRESTATION No.5

City of Longview

100% BID SET

The architect hereby expressly reserves his common law copyright and other property rights in these drawings. These drawings shall not be reproduced without written permission and consent of the architect, nor are they to be assigned to any party without first obtaining written permission and consent.

REVISIONS/ADDENDA

Number	Description	Date Issued

STATE OF TEXAS — SARAI R. AKIN — 15838 — LICENSED IRRIGATOR

06.05.2020

SHEET TITLE:

IRRIGATION PLAN

scale: 1" = 20'-0"
drawn: SRA
checked: MCS
approved: SRA
date: June 5, 2020

PROJECT NUMBER:

2019.009

SHEET NUMBER:

L200

S T R U C T U R A L N O T E S

COORDINATION

A. The contractor shall compare the architectural, structural, mechanical, electrical, plumbing, and other series drawings and report any discrepancies between each set of drawings and within each set of drawings prior to fabrication and installation of any structural members.

B. Only larger sleeve openings and framed openings in structural framing component members are indicated on the structural drawings. However, all sleeves, inserts and openings, including frames and/or sleeves shall be provided for passage, provision and/or incorporation of the work of the contract, including but not limited to mechanical, electrical and plumbing work. This work shall include the coordination of sizes, alignment, dimensions, position, locations, elevations and grades as required to serve the intended purpose. Openings not indicated on the structural drawings, but required as noted above, shall be submitted to the engineer for review.

C. Refer to architectural, mechanical, electrical and plumbing drawings for floor elevations, slopes, drains and location of depressed and elevated floor areas.

D. Compatibility of the structure and provisions for building equipment supported on or from structural components shall be verified as to size, dimensions, clearances, accessibility, weights and reaction with the equipment for which the structure has been designed prior to submission of shop drawings and data for each piece of equipment and for structural components. Differences shall be noted on the submittals.

E. The details designated as "typical details" apply generally to the structural drawings in all areas where conditions are similar to those described in the details.

F. All dimensions and conditions of existing construction shall be verified at the job site prior to the preparation of shop drawings. Differences between existing construction and that shown on the structural drawings shall be referred to the architect. Differences shall also be clouded on the shop drawings.

G. All structural elements of the project have been designed by the engineer to resist the required code vertical and lateral forces that could occur in the final completed structure only. It is the responsibility of the contractor to provide all required bracing during construction to maintain the stability and safety of all structural elements during the construction process until the lateral-load resisting or stability-providing system is completely installed and the structure is completely tied together. Temporary supports shall not result in the overstress or damage of the elements to be braced nor any elements used as brace supports.

H. The contract structural drawings and specifications represent the finished structure, and except where specifically shown, do not indicate the means or methods of construction. The contractor and their sub-contractors shall supervise and direct the work and shall be solely responsible for all construction means, methods, procedures, techniques, sequences and safety measures including, but not limited to, adherences to all osha guidelines. The engineer shall not have control of, and shall not be responsible for, construction means, methods, techniques, sequences or procedures, for safety precautions and programs in connection with the work, for the acts or omissions of the contractor, subcontractors, or any other person performing any of the work, or for the failure of any of these persons to carry out the work in accordance with the structural contract documents.

I. Where conflict exists among the various parts of the structural contract documents, structural drawings, general notes, and specifications, the strictest requirements, as indicated by the engineer, shall govern.

J. Periodic site observation by field representatives of JQ is solely for the purpose of determining if the work is proceeding in accordance with the structural contract documents. This limited site observation is not intended to be a check of the quality or quantity of the work, but rather a periodic check in an effort to inform the owner against defects and deficiencies in the work of the contractor.

SUBSTITUTIONS

A. All requests for substitutions of materials or details shown in the Structural Contract Documents shall be submitted for approval during the bidding period.

B. Once bids are accepted, proposed substitutions will be considered only when they are officially submitted with an identified savings or duration to be deducted from the contract and/or schedule impact. Submittals not satisfying the above criteria will not be considered.

CODES & REFERENCED REPORTS

A. The General Building Code used as the basis for the structural design is as follows:
   1. International Building Code, 2012 Edition
   2. International Existing Building Code, 2012 Edition

B. Structural Concrete: Building Code Requirements for Reinforced Concrete, American Concrete Institute, ACI 318, as referenced by the General Building Code.

C. Concrete Masonry: Building Code Requirements for Concrete Masonry Structures, American Concrete Institute, ACI 530, as referenced by the General Building Code.

D. Structural Steel: Manual of Steel Construction, American Institute of Steel Construction Inc., ANSI/AISC 360, as referenced by the General Building Code.

E. Geotechnical Report: Foundation elements have been designed in accordance with information provided in the following geotechnical report:

Geotechnical engineer:	Alliance Geotechnical Group
Report Number:	LE19-012
Date:	10.13.2019

DESIGN LOADS

A. Dead Loads include the self-weight of the structural elements and the following superimposed loads:

B.	1. Ceiling and Mechanical at roof	10 psf
	2. Ceiling and Mechanical at floors	5 psf
	3. Roofing and rigid insulation	8 psf
	4. Topping slab, per inch of thickness	12.5 psf

B. Live Loads

	OCCUPANCY OR USE	UNIFORM (psf)	CONCENTRATED (lbs.)
1.	Typical U.N.O	100	N/A
2.	Apparatus Bay	250	HS20-44
3.	Roof - Unreduced (see Note 1)	20	N/A
C. 4.	Stairs and exits	100	300
5.	Storage	125	N/A

Notes:
1. The roof structure has additionally been designed to support the weight of ponded water in accordance with AISC.
   a. Notify Architect if the final roof slope is less than 1/4"per foot. Elevation difference between primary and overflow drains or scuppers shall not exceed 2".

D. Snow loads
1. Ground snow load, Pg — 5 psf

D. Wind loads
1. Wind lateral load on structural frame is based on ASCE 7-10 using the following:
   a. Basic Wind Speed (Ultimate) — 120
   b. Exposure — C
   c. Internal Pressure Coefficient, Gcpi
      i. Typical U.N.O. — +/-0.18
      ii. Apparatus Bay — +/-0.55
   d. Risk Category — IV
2. Components and cladding wind pressures:

	Surface	(PSF)	Zone	Area At (ft2)
F.	Typical U.N.O.			
	Exterior walls	+33.5	Interior and edge	10 or less
		-36.3	Interior	10 or less
		-44.6	Edge	10 or less
G.		+25.1	Interior and edge	500 or greater
		-27.9	Interior	500 or greater
		-27.9	Edge	500 or greater
	Roof	-36.6	Interior	10 or less
		-61.4	Edges	10 or less
H.		-92.4	Corners	10 or less
		-33.5	Interior	100 or greater
	Apparatus Bay			
I.	Exterior walls	+44.9	Interior and edge	10 or less
		-47.7	Interior	10 or less
J.		-56.1	Edge	10 or less
		+36.6	Interior and edge	500 or greater
		-39.4	Interior	500 or greater
		-39.4	Edge	500 or greater
	Roof	-48.0	Interior	10 or less
		-72.8	Edges	10 or less
		-103.8	Corners	10 or less
		-44.9	Interior	100 or greater
		-51.1	Edges	100 or greater
		-51.1	Corners	100 or greater

- Pressures for Tributary Areas in between the listed values may be linearly interpolated.
- Negative value signifies pressure acting away from the surface (suction).
- Edge and Corner zone distances shall be determined in accordance with referenced standard.
- Pressures on parapets shall be determined by combining positive and negative wall pressures or wall and roof pressures listed above in accordance with the referenced standard.
- * Pressures are for gross uplift conditions. Refer to roof plan(s) for net uplift values for design of joists, joist girders, and bridging.

E. Seismic Loads
1. The structure and structural components of the building have been designed in accordance with General Building Code with the following criteria:
   a. Seismic Importance Factor, IE — 1.5
   b. Risk Category — IV
   c. Mapped Spectral Response Accelerations
      i. Ss (%g) — 0.117
      ii. S1 (%g) — 0.063
   d. Site Class — d
   e. Spectral Response Coefficients
      i. SDS — 0.125
      ii. SD1 — 0.101
   f. Seismic Design Category — A
   g. Basic Seismic-force-resisting system — Bearing Wall System: Ordinary Plain Masonry Shear Walls
   h. Design Base shear, V — 14k
   i. Seismic Response Coefficient(s), Cs — 0.0936
   j. Response Modification Factor(s), R — 1.5
   k. Analysis Procedure Used — ELF

F. Mechanical/Kitchen Equipment Loads
1. Loading for mechanical rooms and kitchens are based on the weights of equipment and concrete pads as indicated on the Structural Drawings. The Contractor shall submit actual weights of equipment to be used in the project to the Structural Engineer for verification of loads used in the design at least three weeks prior to fabrication and construction of the supporting structure. Any revisions in equipment type, size, or quantity shall be reported to the Architect immediately for verification of the structural design.

BUILDING PAD PREPARATION

A. Structural fill material shall have a plasticity index between 5 and 15, and a liquid limit of 35 or less. Gradation of material shall be as follows:
   1. Passing the No. 200 sieve — 45%

B. Prior to placing fill material, remove all organic and other deleterious material from the existing subgrade for a distance of 5' 0" beyond building line, to a minimum depth of eight feet below the bottom of the deepest grade beams/spread footings, whichever is deeper. Remove additional material as required to place a minimum of three feet of structural fill beneath the building slab. All exposed surfaces shall then be scarified to a depth of 8", watered as required and recompacted to a minimum percentage of the maximum dry density as defined by ASTM D 698 (Standard Proctor Test) at a moisture content at a level of the optimum moisture content as identified in item F.

C. Per the direction of the geotechnical report, if the full clay layer is excavated and sand is encountered at a depth less than that indicated above, the excavation may be stopped and the footings may be founded on the sand layer. These circumstances shall be observed and verified by the geotechnical engineer of record on site. The structural engineer of record should be notified if encountered depths are significantly different than what is assumed in the construction documents.

D. Prior to placing select fill material, the building pad shall be filled using layer-compacted, moisture-conditioned on-site clay soils to within three feet of finished subgrade elevation. The moisture-conditioned soils shall be placed in 8 inch loose lifts at a minimum moisture content outlined in item E. Each lift shall be compacted within a percentage of its maximum dry density as defined in ASTM D 698 as shown in item E. Refer to geotechnical report for additional recommendations regarding moisture-conditioning stockpiled soils prior to placing on the building pad.

E. Structural fill shall be placed in 8" inch loose lifts to final subgrade elevation, watered as required and compacted to a percent of the maximum dry density as defined in ASTM D 698 at a moisture content within a percentage of the optimum moisture content according to item E. Refer to Geotechnical Report for additional information.

F.

Plasticity Index (PI)	Moisture Content Range	Max Dry Density (%)
< 15	-1% to +4%	95% +
16 to 25	+1% to +6%	95% to 100%
26 to 35	+3% to +8%	93% to 98%
> 36	+6% to +9%	91% to 96%

G. The referenced Geotechnical Report also outlines an alternate method for building pad preparation including excavating a minimum of six feet below the existing grade or the bottom of the deepest grade beam/spread footing, whichever is deeper. This excavation is to be filled with select fill. Contractor to price and verify the chosen option with the Geotechnical Engineer.

H. Compaction and moisture content of subgrade and each lift of structural fill shall be inspected and approved by a qualified engineering technician, supervised by a Geotechnical Engineer.

I. Provide a vapor retarder tin accordance with the project specifications.

J. The above recommendations have been prepared in accordance with the referenced geotechnical report.

CONCRETE FOOTINGS

A. Concrete footing design is based on an allowable net bearing capacity of 2000 psf in accordance with the referenced geotechnical report.

B. Footings not specifically located on the plan shall be located on centerline of pilaster or
B. column above. Where no pilaster or column occurs, locate on centerline of wall or beam.

C. Provide dowels from footings into concrete above using same bar size and number as shown for pilaster or column above. Where no pilaster or column occurs, use 4 #7 dowels. Extend dowels 30 bar diameters into pier and wall, beam, pilaster or column, unless noted otherwise on the Structural Drawings.

D. Elevation of top of plinths/footings, unless noted otherwise on the Structural Drawings, is at the bottom of the deepest intersecting beam or wall supported by the footing.

C. Footing excavations shall be to neat lines and shall be free of loose or wet materials.

F. Footing reinforcing and concrete shall be placed immediately after excavations are complete; in no case shall a footing be excavated that cannot be placed by the end of the workday.

G. Reinforcing steel shop drawings shall include placing drawings for templates to set dowels in footings.

D.
H. All footings shall be inspected by a representative of Alliange Geotechincal Group in order to ensure that the proposed bearing material has been reached in accordance with the recommendations given in the referenced geotechnical report and that the footing has been constructed to specified size, with detailed reinforcing, and to specified tolerances.

CAST-IN-PLACE CONCRETE

A. CONCRETE MIX USAGE SCHEDULE:
   All concrete shall conform to the requirements as specified in the table below, unless noted otherwise on the Structural Drawings:

Use	Strength psi	Agg. Type	Agg. Size	Slump Inches	Max w/c	Air Content
Footings	3000	NWT	1"	3-5	----	-----
Grade Beams	4500	NWT	1"	3-5	0.45	3 - 6%
Interior Slab-on-Grade	4000	NWT	1"	3-5	----	-----
Slab-on-Grade (Exposed to Weather)	4500	NWT	1"	3-5	0.45	3 - 6%
Exterior Equipment Pads	4500	NWT	1"	3-5	0.45	3 - 6%
Slab on Form Deck (NWT)	4000	NWT	0.75"	3-5	----	-----
Topping Slabs and Housekeeping Pads	3000	NWT	1"	3-5	----	-----

1. "NWT" refers to normal concrete having air dry unit weight of approximately 145 PCF (ASCE C33 aggregate)
2. Where the w/c ratio is not indicated in the table above, it shall be as necessary to meet strength requirements.
3. Where the w/c ratio is shown, it shall be adhered to regardless of strength requirements.
4. "Strength" is required compressive cylinder strength at an age of 28 days.

B. A maximum of 20% of the cementitious materials used in mix designs may be replaced with class C or F fly ash.

C. Fly ash shall not be used in architecturally exposed concrete.

D. Provide 5 percent plus or minus 1 1/2 percent of entrained air in concrete permanently exposed to the weather and elsewhere at the contractor's option.

E. Horizontal construction joints in concrete placements shall be permitted only where indicated on the Structural Drawings. All vertical construction joints shall be made in the center of spans in accordance with the typical details. Contractor shall submit proposed locations for construction joints not shown on the Structural Drawings for review by the Architect and Engineer. Additional construction joints may require additional reinforcing as specified by the Engineer which shall be provided by the contractor at no additional cost to the owner.

F. Embedded conduits, pipes, and sleeves shall meet the requirements of ACI 318, Section 26.8, including the following:
   1. Conduits and pipes embedded within a slab, wall, or beam (other than those passing through) shall not be larger in outside dimension than 1/3 the overall thickness of the slab, wall or beam in which they are embedded.
   2. Conduits, pipes and sleeves shall not be spaced closer than three diameters or widths on center.

G. Grade beams in contact with earth shall be formed both sides unless noted otherwise in details.

H. Concrete sampling for quality assurance: Concrete that is pumped shall be sampled at the point of discharge from the truck.

CONCRETE REINFORCING

A. Concrete reinforcement for the project shall conform to the following:
   1. All reinforcing steel shall be new billet steel in accordance ASTM A615, Grade 60, unless noted otherwise in the Structural Drawings or these notes.
   2. Deformed Bar Anchors. ASTM A1064 minimum yield strength 70,000 psi as noted on the Structural Drawings. Reinforcing bars shall not be substituted for deformed bar anchors.
   3. Welded wire reinforcement. Welded smooth wire reinforcement, ASTM A1064, yield strength 65,000 psi where noted on the Structural Drawings. Welded deformed wire reinforcement, ASTM A1064, yield strength 70,000 psi where noted on the Structural Drawings. Welded wire reinforcement to be provided in flat sheets.

B. Detailing of reinforcing steel shall conform to the American Concrete Institute 315 Detailing Manual and all hooks and bends in reinforcing bars shall conform to ACI detailing standards, unless noted otherwise on the Structural Drawings.

C. Welded Wire Reinforcement shall be continuous across the entire concrete surface and not interrupted by beams or girders and properly lapped one cross wire spacing plus 2".

D. In unscheduled grade beams, walls, and slabs, detail reinforcing as follows:
   1. Class A lap beam top reinforcing bars at mid span.
   2. Class A lap beam bottom reinforcing bars at the supports.
   3. Provide Class B lap at other location pending Engineer's approval.
   4. Provide standard hooks in top bars at cantilever and discontinuous ends of beams, walls and slabs.
   5. Provide corner bars for all horizontal bars at the inside and outside faces of intersecting beams or walls. Corner bars are not required if horizontal bars are hooked.
   6. Provide 2-#4 diagonal bars at all slab re-entrant corners placed under the top mat of steel.

E. Welding of reinforcing steel will not be permitted unless specifically shown on the Structural Drawings.

F. Heat shall not be used in the fabrication or installation of reinforcement.

G. Reinforcing steel clear cover shall be as follows:

1. Earth-formed grade beams	1 1/2" top, 3" sides, 3" bottom
2. Footings	3"
3. Formed grade beams	1 1/2" top, 2" sides, 3" bottom
4. Slab-on-grade	1 1/2" top

   a. "Exterior Exposure" refers to concrete exposed to earth or weather.

STRUCTURAL MASONRY

A. Minimum compressive strength of the masonry (f'm) shall be as noted below.

B. Mortar shall conform to ASTM C270, Type S. Masonry cement shall not be used.

C. Concrete masonry units shall be hollow load bearing units which conform to ASTM C90, with a minimum net compressive strength as follows:

f'm (psi)	Net area Compressive Strength of CMU Block (psi)
2000	2000

D. Chases shall be built in and not cut in. Chases shall be plumb and shall be minimum one□unit length from jambs of openings. Anchors, wall plugs, accessories and other items to be built in shall be installed as the masonry work progresses. All cutting and fitting of masonry, including that required to accommodate the work of other sections shall be done by masons with masonry saws.

E. Coarse grout shall conform to ASTM C476, with a maximum aggregate size of 1/2" and a minimum compressive strength equal to the specified minimum compressive strength, f'm, but not less than 2000 psi. Course grout shall be placed in accordance with ACI 530.01 Section 3.5.

F. Reinforce concrete masonry unit joints with ladder type hot dip galvanized cold-drawn steel conforming to ANSI/ASTM A82, with W2.8 side rods with W1.7 cross rods.

   1. Space joint reinforcing at 16 inches o.c. unless noted otherwise.
   2. Lap joint reinforcing 14 inches at splices.
   3. Provide prefabricated joint reinforcing corner pieces at all wall corners and intersections.
   4. Joint reinforcing shall be discontinuous at control and expansion joints.

G. Lap reinforcing bars in grouted masonry as noted below. Splices in reinforcing shall be staggered so that not more than 1/2 of all bars are spliced at the same location.

1. Vertical bars:	
#4, #5 rebar	60 bar diameters
#6 rebar	70 bar diameters
#7 or larger rebar	Mechanical splices only
2. Bond beams:	40 bar diameters
3. Lintels:	Do not splice

H. Z-ties shall be provided in all masonry surfaces used as a form for grout at 16 inches on center each way in vertical masonry surfaces and at 8 inches on center each way in horizontal masonry surfaces. The leg embedded in the masonry joint shall have its hook placed 3/4 inch from the outside face of the masonry.

I. Z-ties shall be manufactured from 3/16 inch diameter cold drawn wire. Ties shall be hot dip galvanized, 6 inches long with a 2 inches hook at each end, unless noted otherwise on the Structural Drawings.

J. Provide 1 inch clear cover between ties or longitudinal reinforcing and the inside face of masonry used as forms in grouted beams, pilasters and columns.

POST-INSTALLED ANCHORS AND DOWELS

A. Expansion Anchors:
   1. In Concrete: Expansion Anchors shall have been tested and qualified in accordance with ACI 355.2 and ICC-ES AC 193. Qualifying anchors shall be one of the following:
      a. Kwik Bolt TZ (ICC-ES ESR-1917), Hilti Inc.
      b. Strong Bolt 2 (ICC-ES ESR-3037), Simpson Strong-Tie Co., Inc.
   2. In Grouted Masonry: Installation permitted in the face of wall only unless noted otherwise on the Structural Drawings. Installation shall not be allowed within 1 1/2 inches of a head (vertical) mortar joint. Expansion Anchors shall have been tested and qualified in accordance with ICC-ES AC 01. Qualifying anchors shall be one of the following products:
      a. Kwik Bolt 3 (ICC-ES ESR-1385), Hilti Inc.
      b. Wedge-All (ICC-ES ESR-1396), Simpson Strong-Tie Co., Inc.
      c. Strong-Bolt 2 (IAPMO-ES ER-0240), Simpson Strong-Tie Co., Inc.

B. Screw Anchors:
   1. In Concrete: Screw Anchors shall have been tested and qualified in accordance with ACI 355.2 and ICC-ES AC 193. Qualifying anchors shall be one of the following:
      a. Kwik HUS-EZ (ICC-ES ESR-3027), Hilti Inc.
      b. Titen HD (ICC-ES ESR-2713), Simpson Strong-Tie Co., Inc.
   2. In Grouted Masonry: (Installation permitted in both the top and face of wall) Screw Anchors shall have been tested and qualified in accordance with ICC-ES AC 106. Qualifying anchors shall be one of the following products:
      a. Titen HD (ICC-ES ESR-1056), Simpson Strong-Tie Co., Inc.
      b. Kwik HUS-EZ and HUS-EZ I (ICC-ESR-3027), Hilti Inc.

C. Adhesive Anchors with Threaded Rod:
   1. In Concrete: Adhesive Anchors shall have been tested and qualified in accordance with ACI 355.4 and ICC-ES AC 308. Qualifying anchors shall be one of the following products:
      a. Epoxy: HIT-RE 500V3 SAFE SET (ICC-ES ESR-3814), Hilti Inc.
      b. Epoxy: SET-XP (ICC-ES ESR-2508), Simpson Strong-Tie Co., Inc.
      c. Acrylic: HIT-HY 200 SAFE SET (ICC-ES ESR-3187), Hilti Inc.
      d. Acrylic: AT-XP (IAPMO-ER-0281), Simpson Strong-Tie Co., Inc.
   2. In Grouted Concrete Masonry: (Installation permitted in both the top and face of wall) Adhesive Anchors shall have been tested and qualified in accordance with ICC-ES AC 58. Qualifying anchors shall be one of the following:
      a. Acrylic: HIT HY-270 (ICC-ES ESR-4143), Hilti, Inc.
      b. Epoxy: SET (ICC-ES ESR-1772), Simpson Strong-Tie Co., Inc.
      c. Acrylic: AT-XP (IAPMO-ES ER-0281), Simpson Strong-Tie Co., Inc.
   3. In Ungrouted Concrete Masonry:
      a. Epoxy: SET (ICC-ES ESR-1772), Simpson Strong-Tie Co., Inc.
      b. Acrylic: HIT HY-270 (ICC-ES ESR-4143), Hilti, Inc.
   4. Threaded anchor rod shall be one of the following:
      a. Hilti adhesive: "HAS-E" standard ISO 898 Class 5.8
      b. Simpson adhesive: Steel meeting the requirements of ASTM A1554, grade 36, hot dip galvanized.
      c. Anchor rod shall have a chamfered end on one end to accept a nut and washer; it may have a 45-degree chisel point on the other end.
      d. Nuts and washers shall have a proof load strength at least as strong as anchor rod. Stainless steel nuts and washers shall be provided with stainless steel rods.

D. Adhesive Rebar Dowelling
   1. Adhesive dowels are not permitted to be substituted for cast-in dowels unless authorized in advance by JQ for each specific location.
   2. Adhesive doweling systems in concrete shall have been tested and qualified in accordance with ACI 355.4 and ICC-ES AC 308. Qualifying anchors shall be one of the following products:
      a. Epoxy: HIT-RE 500V3 SAFE SET (ICC-ES ESR-3814), Hilti Inc.
      b. Epoxy: SET-XP (ICC-ES ESR-2508), Simpson Strong-Tie Co., Inc.
      c. Acrylic: HIT-HY 200 SAFE SET (ICC-ES ESR-3187), Hilti, Inc.

E. Anchor and Dowel Installation
   1. Anchors and dowels of the size and embedment shown on the Drawings shall be installed in accordance with the Contract Documents, the manufacturer's recommendations, and the manufacturer's current evaluation (ICC-ES or IAPMO-ES) report for the anchor. If conflicts exist between these referenced documents, the most stringent requirements shall govern.
   2. The Contractor shall locate all existing reinforcing steel and other embedded items contained in the concrete using non-destructive methods and shall position anchor locations to avoid conflicts with existing embedded items. Anchor or dowel locations can be adjusted by a maximum of 1 1/2" from detailed locations to avoid conflicts, but shall neither change arrangement nor move closer to a concrete edge.
   3. Based on field verified locations of reinforcing steel and embedded items, the Contractor shall create templates for each anchor group. Submit template dimensions for review prior to fabrication of connection plates.
   4. Holes for anchors and dowels shall be drilled in a continuous operation using the drill-bit type and size recommended by the anchor manufacturer. Holes shall be drilled perpendicular to the concrete surface and shall not be enlarged or redirected at any point along its length. Holes shall be drilled using a hammer drill, coring shall not be allowed, unless noted otherwise.
   5. Oil free compressed air shall be used to blow out the holes; shop vacs, squeeze bulbs, etc. shall not be used. Refer to manufacturer's information for detailed cleaning instructions.
      a. Hilti Safe-Set system may be used to eliminate hole cleaning with adhesive anchors.
   6. All abandoned holes shall be filled with non-metallic nonshrink grout capable of reaching a design compressive strength of 5,000 psi at 28 days.
   7. Holes in connection plates shall be no more than 1/16" larger than the anchor diameter. If larger holes are required for erection purposes, Contractor shall notify Engineer such that a plate washer size can be provided.
   8. Concrete shall have a compressive strength of 2500 psi minimum at an age of 21 days.
   9. Adhesive anchors and dowels: Concrete and masonry substrates shall have the following minimum and maximum temperatures at the time of adhesive anchor and dowel installation:

	Minimum (°F)	Maximum (°F)
Hilti HIT RE-500V3 SAFE SET	None specified	
Simpson SET-XP	50	100
Hilti HY-270	41	104
Hilti HY-200 SAFE SET	14	104
Simpson SET	40	110
Simpson AT	0	100

F. The following parameters were used in the determination of the adhesive bond stress for adhesive anchors:
   1. Concrete temperature range:
      a. Epoxy: HIT-RE 500V3 SAFE SET (ICC-ES ESR-3814): Temperature range "A" (Max short term temp = 110degF, max long term temp = 80degF)
      b. Epoxy: SET-XP (ICC-ES ESR-2508): Temperature Range 1 (Max. Short term temp. = 110degF, max. long term temp. = 75degF)
      c. Epoxy: SET (ICC-ES ESR-1772): Max. base material temp. = 110deg F
      d. Acrylic: HIT-HY200 SAFE SET (ICC-ES ESR-3187): Temperature range "A" (Max short term temp = 104deg F, max long term temp = 75deg F)
      e. Acrylic: AT (ICC-ES ESR-5791): Max. base material temp. = 110deg F
   2. Drilled hole condition: Dry

G. For adhesive anchors installed in a horizontal orientation subject to sustained tension loading and all upwardly inclined (including soffit installations) orientation:
   1. Per ACI 318-11 (D.9.2.2): Installation shall be performed by personnel certified by ACI/CRSI "Adhesive Anchor Installer Certification Program." Certification shall include written and performance tests.

Architects Design Group

Architects and Planners

I.S.K. Reeves V, F.A.I.A.
Ian A. Reeves, A.I.A.
Susan Gantt A.I.A., LEED-AP

333 N. Knowles Ave.
Winter Park, Florida 32789
(407) 647-1706

Corporate Registration Number: BR1177

FIRE STATION NO.5

CITY OF LONGVIEW

100% BID SET

The architect hereby expressly reserves his common law copyright and other property rights in these drawings. These drawings shall not be reproduced without written permission and consent of the architect, nor are they to be assigned to any party without first obtaining written permission and consent.

REVISIONS/ADDENDA

Number	Description	Date Issued

SHEET TITLE:

STRUCTURAL NOTES

scale: As indicated
drawn: JC
checked: MS
approved: BK
date: June 5th, 05/05/2020
PROJECT NUMBER:

1006

SHEET NUMBER:

S1.01

shaping the built environment
JQ ENGINEERING, LLP
100 GLASS STREET
214.752.9098
DALLAS, TEXAS 75207
JQENG.COM
PROJECT NO: 3190167
TBPE FIRM F-1294
STATE OF TEXAS
BARRY K. KRIEGER
100546
LICENSED
PROFESSIONAL ENGINEER

S T R U C T U R A L N O T E S

STRUCTURAL STEEL

A. Material
1. All hot rolled steel members shall be new and conform to ASTM specification A6.
2. ASTM Specification and Grade - clearly mark the grade on each member.
3. Unless Noted otherwise on the Structural Drawings, structural steel members shall be:
   a. W-shapes shall conform to ASTM A992.
   b. Channels shall conform to ASTM A36.
   c. Angles shall conform to ASTM A36.
   d. Steel pipe shall conform to ASTM A53, Type E or S, Grade B.
   e. Round hollow structural shape members shall conform to ASTM A500, Grade B Fy = 42 ksi.
   f. Square or rectangular hollow structural shape members shall conform to ASTM A500 Grade B, Fy = 46 ksi.
   g. Structural steel plate shall conform to ASTM A36.
   h. Any other steel shall conform to ASTM A36.
   i. Headed stud shear connectors shall conform to ASTM A108.

B. Fabrication
1. Splicing of structural steel members is prohibited without prior approval of the Engineer as to location and type of splice to be made. Any member having splice not shown and detailed on shop drawings will be rejected.

C. Erection
1. Erection tolerances of anchor bolts, embedded items, and all structural steel unless specified otherwise on the Structural Drawings shall conform to the AISC Code of Standard Practice.
2. Field cutting of structural steel or any field modifications to structural steel shall not be made without prior approval of the Engineer.
3. Contractor shall protect any unprimed structural steel from detrimental effects of corrosion, as required, until the steel is enclosed and protected by the new construction.
4. Hot dip galvanize after fabrication all structural steel items and connections permanently exposed to the weather, whether specified on the Structural Drawings or not. Such items include, but are not limited to:
   a. Shelf angles
   b. Railing exposed to weather.
   c. Examine the Architectural and Structural Drawings for other items required to be hot dipped galvanized. Galvanize all nuts, bolts, and washers used in connection with such steel. Field welded connections shall have welds protected with "Z.R.C. Cold Galvanizing Compound" as manufactured by Z.R.C. Company.

D. Contractor shall coordinate structural steel fireproofing requirements. All interior structural steel, including steel joists, scheduled or indicated to receive spray applied fireproofing shall be delivered to the project site unprimed. Steel exposed to corrosive conditions after installation shall be primed with a protective coating which does not diminish the bond between the spray applied fireproofing, and the steel substrate. Any primer, and/or coating applied to structural steel shall be approved for use in the applicable U.L. Fire Resistance Assembly used on the project.

STRUCTURAL STEEL CONNECTIONS

A. Welded Connections
1. All welding shall conform to ANSI/AWS D1.1, latest edition.
2. Fillet welds with no size specified shall be 3/16 inch or minimum size required by AISC, whichever is larger.

B. Bolted Connections
1. Unless noted otherwise on the Structural Drawings, bolts shall be 3/4 inch diameter and conform to ASTM F3125, grade A325. Bolts shall be designed using values for bearing type bolts with thread allowed in the shear plane.
2. Bolts shall be tightened to "snug tight" as defined by AISC, unless noted otherwise on the Structural Drawings.

C. Structural steel connections not specifically detailed on the Structural Drawings shall be designed and detailed by the Contractor under the direct supervision of a professional engineer licensed in the state having jurisdiction at the project site. Sealed calculations for all connections designed by the Contractor shall be submitted for the Architect's files.

D. Beam connections shall be designed and detailed as follows, unless noted otherwise on the Structural Drawings:
1. Connections shall be AISC type 2 simple framing connections. Shear tab connections shall not be used unless specifically detailed on the Structural Drawings, or connections are designed and detailed by the fabricator's registered professional engineer licensed in the State of Texas and sealed calculations are submitted.
2. In general, shop connections shall be bolted or welded and field connections shall be bolted.
3. Where indicated, connections shall be designed for the scheduled shear force. The shear force is indicated on the Structural Drawings as "R = ", and the horizontal force indicated as "H = ".
4. If not indicated on the Structural Drawings, connections shall be designed for 55 percent of the total load capacity for the beam span shown in the beam tables in the AISC Manual referenced in the "Codes & Referenced Reports" notes.
5. Short slotted holes shall be permitted provided washers are installed in accordance with AISC requirements. Washers shall be hardened where A325 bolts are utilized.

E. Moment Connections
1. Where indicated, moment connections shall be designed for the scheduled moment envelope. The moment is indicated on the Structural Drawings as "(M =)".
2. If not indicated on the Structural Drawings, moment connections shall be welded to develop the full capacity of the member.
3. All welds denoted as moment connection or complete joint penetration (CJP) weld shall be ultrasonically or x-ray certified by an independent testing agency.

F. All beam shears, reactions, member forces, moments, etc. shown on the Structural Drawings are unfactored loads conforming to the requirements of AISC Allowable Stress Design (ASD).

G. Roof edge angles shall be continuous and shall be spliced only at supports. Splices shall be butt welded to develop full capacity of the member.

H. Base Plates
1. Column base plates shall be set to the elevation indicated on the Structural Drawings and leveled using shims or by double nuts on anchor bolts. Base plates shall then be grouted with a non-shrink, high strength nonmetallic grout. Tighten anchor bolts after supported members have been positioned and plumbed.
2. Hole sizes in base plates shall be oversized with plate washers per AISC Table 14-2.

I. Anchor rods shall be:
1. Typical: ASTM F1554 Gr. 36, Weldable.

J. For connections not specifically addressed by these notes or the Structural Drawings, provide fillet welds at all contact surfaces sufficient to develop the tensile strength of the smaller member at the joint.

OPEN WEB JOISTS

A. Open web steel joists shall conform to the Standard Specifications of the Steel Joist Institute (SJI). Chords of joists shall be angles or tees.

B. Provide bridging in accordance with SJI Specifications and OSHA Standard 29 CFR-1926.757(C). Bridging shall be continuous through structural steel members, and shall be anchored to spandrel members or walls. Provide additional bridging where required for uplift.

C. Design joists for dead loads, live loads, snow loads, and wind pressures indicated in the Design Loads section of the Structural Notes. Joists shall be designed for additional loads indicated on roof loading plans, roof framing plans, and sections/details, as applicable.

D. Joist manufacturer shall design chords of joists to support a nominal concentrically-applied load of 100 pounds between all panel points without requiring additional reinforcing. This additional load has been accounted for in the overall design loads and is not additive to those specified.

E. All hangers or attachments to joists shall be placed concentric with the top and bottom chord(s). Hangers with reactions in excess of 100 pounds must be located at the panel points of the joist, or the chord(s) shall be reinforced in accordance with the "Typical Details."

F. Provide flat bearing for all joists. Bear joists on supports in accordance with SJI Specifications.

G. Joists shall be connected to their supports in accordance with SJI Specifications and as indicated by the joist manufacturer.

METAL DECKS

A. Composite metal deck and concrete slab
1. Composite metal deck shall be:

Location	Deck Depth	Gauge	Concrete Type	Total Thickness	Fy (ksi)
Floor	1.5"	22	NWT	4"	50

2. Sheet steel for composite deck and accessories shall conform to ASTM A653 Structural Quality. Galvanizing shall conform to ASTM A924 with a minimum coating class of G60 as defined in ASTM A653.
3. Deck shall be continuous over three or more supports so as not to require any intermediate shoring to support construction loads and wet concrete, unless noted otherwise on the Structural Drawings. Deck continuous over fewer than three supports shall be shored from the supporting beams.
4. Reinforce the slab over the composite deck with 6x6-W2.9xW2.9 welded wire mesh chaired to be located 3/4" below the top of the slab. Provide a 6'-0" wide extra layer of mesh over all interior beams and girders spanning parallel to the deck span.
5. Slabs over composite deck shall be placed and finished to provide a floor within specified tolerances. Slab thicknesses may vary away from the columns due to deflections of the beams and deck.
6. Install deck ends over supporting frame with a minimum end bearing of 1-1/2 inches.
7. Fasten floor deck panels to steel supporting members by arc spot (puddle) welds of the surface diameter indicated and as follows:
   a. Weld Diameter: 5/8-inch nominal.
   b. If minimum uncoated steel deck thickness is less than 0.028 inch, install weld washers at each weld location.
   c. Weld edge ribs of panels at each support. Space additional welds an average of 12 inches apart, but not more than 18 inches apart.
   d. Fasten side laps and perimeter edges of panels between supports, at intervals not exceeding the lesser of 1/2 of the span or 36 inches.
   e. Mechanically fasten with self-drilling No. 10 diameter or larger carbon-steel screws.
   f. Fasten with a minimum of 1-1/2-inch long welds.
   g. Do not use admixtures with chloride salts in concrete for slabs over metal deck.

B. Metal Roof Deck
1. Metal Roof Deck Schedule:

Location	Gauge	SDI Deck Type	Deck Depth (in)	Sheet Width (in)	Min. Ix (in4)	Min. Sp (in3)	Min. Sn (in3)
Typ. UNO	22	WR	1.5	36	0.169	0.186	0.194

Sp = positive section modulus in3
Sn = negative section modulus in3
I = moment of inertia in4

2. Roof deck shall be galvanized as indicated on the Structural Drawings.]
3. Sheet steel for galvanized roof deck and accessories shall conform to ASTM A653, Structural Quality, with a minimum yield strength of 33 ksi. Galvanizing shall conform to ASTM A653 with a minimum coating of {G60 OR G90} as defined in A653.
4. Roof deck shall be continuous over four or more supports.
5. Place deck panels on structural supports and adjust to final position with ends lapped 2 inches over structural supports. Provide minimum end bearing of 2 inches.
6. Roof deck connections shall be as follows:

Location	Support Connx Pattern	Support Fastener	Sidelap Fastener/ No per span
Typical Building			
Typical U.N.O.	36/4	5/8 PW	#10 Tek/ 3

See Design Wind Load information or plans for "a" dimension and Interior Fields, Perimeter Band, Ridge Band, and Corner Zones wind loads.
PW = Puddle Weld

7. Power driven fasteners shall be selected by the Contractor for the combinations of deck gauge and deck support member thickness. Submit proposed fasteners with complete manufacturer's information, including diaphragm shear values for the Engineer to review.
8. Puddle welds shall be 5/8" minimum diameter and shall be made through weld washers for decking lighter than 22 gauge.
9. Mechanical, electrical and plumbing systems shall not be supported by the metal roof deck.

WELDED METAL BAR GRATING

A. Material Specification:
1. Bearing Bars: ASTM A569
2. Cross Rods: ASTM A510

B. Unless noted otherwise on the Structural Drawings, grating shall be 1 1/4 inch x 3/16 inch bearing bars at 1 3/16 inch on center with welded cross rods at 4 inches on center.

C. Grating shall be hot dip galvanized.

D. Hold-down system shall be one of the following:
1. Hilti X-FCM-M 1-1/4 to 1-1/2 inches duplex coated grating disks with 8mm dia. X-EM8H-15-12 powder actuated threaded studs (1/2 inch maximum base material thickness).
2. Hot-dip galvanized type H-3 saddle clips by Amico or approved equal with one of the following fasteners:
   a. Hilti 1/4 inch diameter X-EW6H-28-9 powder actuated threaded studs (1/2 inch maximum base material thickness).
   b. 1/4 inch diameter x 2 1/2 inches A307 bolts with nut through 5/16 inch diameter hole drilled through steel supports.
   c. 1/4 inch - 28 x 2 1/2 inches HWH TEKS/4 self-tapping screws by ITW with 'Climaseal' finish (1/2 inch maximum base material thickness).
3. For removable or temporary installations, type H-1 anchor clips with 1/4 inch diameter x 2-1/2 inches J-bolts by Amico or approved equal.

E. Attachments shall be placed 6 inches from each side panel at end supports and in the middle of the panel at intermediate supports.

DESIGN BY OTHERS

A. In accordance with the Specifications the items listed below are not included in the Contract Documents. Design of these elements shall be the responsibility of the Contractor, and shall be designed and sealed by a registered professional engineer licensed in the state having jurisdiction at the project site.
1. Steel Connections
2. Metal Stairs
3. Metal Ladders
4. Guardrail and Handrail Systems
5. Embedded assemblies and inserts, clamps, hangers, trapezes, unistrut, etc. for the support of MEP systems.
6. Embedded assemblies, inserts, and/or hangers for fire suppression systems.

B. Design of the items listed above shall be in accordance with the General Building Code, and shall include all attachments to the structure.

SYMBOLS LEGEND

SYMBOL	DESCRIPTION
BEAM SIZE; WXXxXX (X) C=X"; R=XK; NO. OF HEADED STUDS; REACTION (SERVICE LOAD); CAMBER	COMPOSITE STEEL BEAM
FTG. TYPE, T.O.FTG. EL. T.O.FTG. DETAIL	CONCRETE FOOTING
MOMENT CONNECTION; BEAM SIZE; WXXxXX; MOMENT CONNECTION	STEEL BEAM MOMENT CONNECTION
COLUMN SIZE; BASE PLATE TYPE	STEEL COLUMN
#	NEW COLUMN GRID
#	EXISTING COLUMN GRID
	SLAB OR DECK SPAN DIRECTION
	DROP IN SLAB OR DECK
	DROP AND SLOPE IN SLAB OR DECK
	SLOPE IN SLAB OR DECK
BRACE-x	VERTICAL STEEL BRACE
	STEEL BEAM SPLICE
*	HEAVY STEEL CONNECTION
	MASONRY WALL
	WINDOW IN MASONRY WALL
	DOOR IN MASONRY WALL
	NON LOAD-BEARING CMU WALL
	EXISTING CONSTRUCTION
	MISCELLANEOUS, SEE PLAN

STRUCTURAL ABBREVIATIONS

ABV.	-	ABOVE
A.F.F.	-	ABOVE FINISHED FLOOR
ADDN'L.	-	ADDITIONAL
ADH.	-	ADHESIVE
ADJ.	-	ADJACENT
AGGR.	-	AGGREGATE
A/C	-	AIR CONDITIONER
AHU	-	AIR HANDLING UNIT
ALT.	-	ALTERNATE
ALUM.	-	ALUMINUM
A.C.I.	-	AMERICAN CONCRETE INSTITUTE
A.I.S.C.	-	AMERICAN INSTITUE OF STEEL CONSTRUCTION
A.B.	-	ANCHOR BOLT
&	-	AND
L	-	ANGLE
APPD.	-	APPROVED
APPROX.	-	APPROXIMATE
ARCH.	-	ARCHITECT
ARCH'L	-	ARCHITECTURAL
A.E.C.	-	ARCHITECTURALLY EXPOSED CONCRETE
A.E.S.S.	-	ARCHITECTURALLY EXPOSED STRUCTURAL STEEL
@	-	AT
B.F.	-	BACK FACE
B. TO B.	-	BACK TO BACK
BSMT.	-	BASEMENT
BM.	-	BEAM
BRG.	-	BEARING
B.F.F.	-	BELOW FINISH FLOOR
BTWN.	-	BETWEEN
BEV'(D)	-	BEVEL(ED)
BLK.	-	BLOCK
B.L.	-	BLOCK LINTEL
BLKG.	-	BLOCKING
BOT.	-	BOTTOM
B.O.	-	BOTTOM OF
B.O.S.	-	BOTTOM OF STEEL
BRKT.	-	BRACKET
BR.L.	-	BRICKLEDGE
BRDG.	-	BRIDGING
BLDG.	-	BUILDING
C	-	CAMBER
C.I.P.	-	CAST-IN-PLACE
CLG.	-	CELING
C.L.	-	CENTER LINE
C.G.	-	CENTER OF GRAVITY
C.G.S.	-	CENTER OF GRAVITY OR STRAND
CTR'D.	-	CENTERED
CLR.	-	CLEAR OR CLEARANCE
CFS	-	COLD FORMED STEEL
COL.	-	COLUMN
C OR COMP.	-	COMPRESSION
CONC.	-	CONCRETE
CMU	-	CONCRETE MASONRY UNIT
CONN(S)	-	CONNECTION(S)
CONST.	-	CONSTRUCTION
CONST. JT.	-	CONSTRUCTION JOINT
CONT.	-	CONTINUOUS
CONTR.	-	CONTRACTOR
C.J.	-	CONTROL JOINT
COORD.	-	COORDINATE
COV. PL.	-	COVER PLATE
D.L.	-	DEAD LOAD
D.B.A.	-	DEFORMED BAR ANCHOR
D.	-	DEPTH
DTL.	-	DETAIL
DIAG.	-	DIAGONAL
DIA OR Ø	-	DIAMETER
DIM(S).	-	DIMENSION(S)
DBL.	-	DOUBLE
XX-STR	-	DOUBLE EXTRA STRONG
DVTL.	-	DOVETAIL
DWL(S).	-	DOWEL(S)
DN.	-	DOWN
DS.	-	DOWNSPOUT
DWG(S).	-	DRAWING(S)
EA.	-	EACH
E.F.	-	EACH FACE
E.W.	-	EACH WAY
E.O.D.	-	EDGE OF DECK
ELEC.	-	ELECTRICAL
EL.	-	ELEVATION
ELEV.	-	ELEVATOR
EMBED.	-	EMBEDMENT
ENGR.	-	ENGINEER
EQ.	-	EQUAL
EQUIP.	-	EQUIPMENT
EF	-	EXHAUST FAN
(E)	-	EXIST.
EXIST.	-	EXISTING
EXP.	-	EXPANSION
E.J.	-	EXPANSION JOINT
EXT.	-	EXTERIOR
X-STR	-	EXTRA STRONG
FABR.	-	FABRICATOR
F. TO F.	-	FACE TO FACE
F.S.	-	FAR SIDE
F.V.	-	FIELD VERIFY
FIN'(D)	-	FINISH(ED)
FIN. FL.	-	FINISHED FLOOR
FP.	-	FIREPROOF(ING)
FLG.	-	FLANGE
FL.	-	FLOOR
F.D.	-	FLOOR DRAIN
FT.	-	FOOT (OR) FEET
FDN.	-	FOUNDATION
FRMG	-	FRAMING
F.P.	-	FULL PENETRATION

GA.	-	GAGE OR GAUGE
GALV.	-	GALVANIZED
G.C.	-	GENERAL CONTRACTOR
GR.	-	GRADE
GR. BM.	-	GRADE BEAM
H.S.A.	-	HEADED STUD ANCHOR
HT.	-	HEIGHT
H.P.	-	HIGH POINT
HSS	-	HOLLOW STRUCTURAL SECTION
HK.	-	HOOK
HORIZ.	-	HORIZONTAL
H.B.	-	HORIZONTAL BRACE
H.D.	-	HOT-DIP
IN.	-	INCH
INFO.	-	INFORMATION
I.D.	-	INSIDE DIAMETER
I.F.	-	INSIDE FACE
INT.	-	INTERIOR
INTERM.	-	INTERMEDIATE
JT.	-	JOINT
J.G.	-	JOIST GIRDER
JST(S)	-	JOIST(S)
KLF	-	KIP PER LINEAR FOOT
KSF	-	KIP PER SQUARE FOOT
KSI	-	KIP PER SQUARE INCH
K	-	KIPS (1000 LBS)
L.	-	LENGTH
L.W.	-	LIGHTWEIGHT
L.W.C.	-	LIGHTWEIGHT CONCRETE
L.L.	-	LIVE LOAD
LOC.	-	LOCATION
LLH	-	LONG LEG HORIZONTAL
LLV	-	LONG LEG VERTICAL
LSH	-	LONG SIDE HORIZONTAL
LSV	-	LONG SIDE VERTICAL
LSL	-	LONG SLOTTED HOLE
LONG	-	LONGITUDINAL
L.P.	-	LOW POINT
MFR.	-	MANUFACTURE(R)
MAS.	-	MASONRY
MAT.	-	MATERIAL
MAX.	-	MAXIMUM
MECH.	-	MECHANICAL
MEP	-	MECHANICAL, ELECTRICAL, PLUMBING
MTL.	-	METAL
MEZZ.	-	MEZZANINE
MID.	-	MIDDLE
MIN.	-	MINIMUM
MISC.	-	MISCELLANEOUS
M	-	MOMENT
M.C.	-	MOMENT CONNECTION(S)
N.F.	-	NEAR FACE
NOM.	-	NOMINAL
N.S.	-	NON-SHRINK
N/A	-	NOT APPLICABLE
N.I.C.	-	NOT IN CONTRACT
N.T.S.	-	NOT TO SCALE
NO. OR #	-	NUMBER
O.C.	-	ON CENTER
OPNG(S)	-	OPENING(S)
OPP.	-	OPPOSITE
O.H.	-	OPPOSITE HAND
O.D.	-	OUTSIDE DIAMATER
O.F.	-	OUTSIDE FACE
OVS	-	OVER-SIZED HOLE
P	-	PAN
P.J.	-	PANEL JOINT
PAR.	-	PARALLEL
PERP.	-	PERPENDICULAR
PC.	-	PIECE
PL.	-	PLATE
PT.	-	POINT
P-T	-	POST-TENSION(ED)
# OR LBS.	-	POUNDS
PCF	-	POUNDS PER CUBIC FOOT
PLF	-	POUNDS PER LINEAR FOOT
PSF	-	POUNDS PER SQUARE FOOT

PSI	-	POUNDS PER SQUARE INCH
P.E.M.B.	-	PRE-ENGINEERED METAL BUILDING
P/C	-	PRECAST CONCRETE
PREFAB.	-	PREFABRICATED
PRELIM.	-	PRELIMINARY
P.T.	-	PRESSURE TREATED
PROJ.	-	PROJECTION
QTY.	-	QUANTITY
R	-	RADIUS
REINF.	-	REINFORCE(ING)(ED)(MENT)
RCP	-	REINFORCED CONCRETE PIPE
REM.	-	REMAINDER
REQ.	-	REQUIRE
REQ'D.	-	REQUIRED
RET. SYS.	-	RETENTION SYSTEM
RIS.	-	RISER
RF.	-	ROOF
R.D.	-	ROOF DRAIN
R.T.U.	-	ROOF TOP UNIT
RM.	-	ROOM
R.O.	-	ROUGH OPENING
RND.	-	ROUND
SCHED.	-	SCHEDULE(D)
SECT.	-	SECTION
V	-	SHEAR
SHT.	-	SHEET
SSL	-	SHEET SHORT SLOTTED HOLE
SW	-	SIDEWALK
SIM.	-	SIMILAR
S.O.G.	-	SLAB ON GRADE
SPA.	-	SPACE
SPEC(S)	-	SPECIFICATION(S)
SPEC'D	-	SPECIFIED
SQ.	-	SQUARE
S.F.	-	SQUARE FOOT
STAGG.	-	STAGGERED
S.S.	-	STAINLESS STEEL
STD.	-	STANDARD
STL.	-	STEEL
S.J.I.	-	STEEL JOIST INSTITUE
STIFF	-	STIFFENER
STIRR.	-	STIRRUPS
STR.	-	STRAIGHT
STRUCT'L	-	STRUCTURAL
STRUCT.	-	STRUCTURE
SUBCONTR.	-	SUBCONTRACTOR
SUPT(S).	-	SUPPORT(S)
TEMP.	-	TEMPERATURE
T	-	TENSION
TERR.	-	TERRAZZO
THK.	-	THICK
THRD.	-	THREAD(ED)
T&G	-	TONGUE AND GROOVE
T&B	-	TOP AND BOTTOM
T.O.	-	TOP OF
T.O.B.	-	TOP OF BEAM
T.O.C.	-	TOP OF CONCRETE
T.O.F.	-	TOP OF FOOTING
T.O.J.	-	TOP OF JOIST
T.O.P.	-	TOP OF PIER
T.O.P.C.	-	TOP OF PIER (PIPE) CAP
T.O.S.	-	TOP OF STEEL
T.O.W.	-	TOP OF WALL
TRANSV.	-	TRANSVERSE
TR.	-	TREAD
TYP.	-	TYPICAL
U.N.O.	-	UNLESS NOTED OTHERWISE
VERT.	-	VERTICAL
V.B.	-	VERTICAL BRACE
WPFG.	-	WATERPROOFING
WS.	-	WATERSTOP
WT.	-	WEIGHT
W.W.M.	-	WELDED WIRE MESH
W.	-	WIDTH
W.L.	-	WIND LOAD
WDW.	-	WINDOW
W/	-	WITH
W/O	-	WITHOUT
W.D.	-	WOOD
W.P.	-	WORK POINT

Architects Design Group

Architects and Planners
I.S.K. Reeves V, F.A.I.A.
Ian A. Reeves, A.I.A.
Susan Gantt A.I.A., LEED-AP

333 N. Knowles Ave.
Winter Park, Florida 32789
(407) 647-1706

Corporate Registration
Number: BR1177

FIRE STATION NO.5

CITY OF LONGVIEW

100% BID SET

The architect hereby expressly reserves his common law copyright and other property rights in these drawings. These drawings shall not be reproduced without written permission and consent of the architect, nor are they to be assigned to any party without first obtaining written permission and consent.

REVISIONS/ADDENDA

Number	Description	Date Issued

SHEET TITLE:

STRUCTURAL NOTES, SYMBOLS & ABBREVIATIONS

scale: As indicated
drawn: JC
checked: MS
approved: BK
date: June 5th, 2020

06/05/2020

PROJECT NUMBER:
1006

SHEET NUMBER:
S1.02

shaping the built environment
JQ ENGINEERING, LLP
100 GLASS STREET
214.752.9098
DALLAS, TEXAS 75207
JQENG.COM
PROJECT NO: 3190167
TBPE FIRM F-1294
STATE OF TEXAS
BARRY K. KRIEGER
100546
LICENSED
PROFESSIONAL ENGINEER

SPECIAL INSPECTIONS

1. Special Inspections shall be performed in accordance with Chapter 17 of the 2012 International Building Code (IBC) by a Special Inspector hired by the Owner to perform the Special Inspections listed below. The Special Inspector shall be qualified by an approved agency according to the City's building official to perform the special inspections for which they will be undertaking. The Contractor shall coordinate with and notify the Special Inspector of all tests. The Special Inspector shall be responsible to verify that the items detailed in the Construction Documents were built accordingly and shall prepare, sign, and furnish inspection reports to the building official and the Architect for all time spent at the site. The Inspector shall bring discrepancies to the immediate attention of the General Contractor for correction. If the discrepancies are not corrected, the discrepancies shall be brought to the attention of the building official and to the Architect prior to the completion of that phase of the work. These special inspections are in addition to the other inspections listed in these Structural Notes or Project Specifications.

2. Where structural load-bearing members and assemblies are shop fabricated, the Special Inspector shall verify that the fabricator maintains detailed fabrication and quality control procedures that provide a basis for inspection control of the workmanship and the fabricator's ability to conform to the Construction Documents and Referenced Standards, unless the fabricator is registered and approved to perform such work without special inspection.

VERIFICATION AND INSPECTION TASKS FOR WELDING OF STRUCTURAL STEEL[1] (AISC 360-10 Table N5.4)

SPECIAL INSPECTION REQUIRED	VERIFICATION AND INSPECTION	INSPECTION FREQUENCY		REFERENCED STANDARD	IBC REFERENCE
		CONTINUOUS	PERIODIC		
	1. Inspection tasks prior to welding:				
YES	a. Welding procedure specifications (WPSs) available	X	--	AISC 360-10 N5.4-1: AWS D1.1	1705.2.1
YES	b. Manufacturer certifications for welding consumables available	X	--		
YES	c. Material identification (type/grade) [2]	--	X		
YES	d. Welder identification system [2]	--	X		
YES	e. Fit-up of groove welds (including joint geometry) [2] 1) Joint preparation 2) Dimensions (alignment, root opening, root face, bevel) 3) Cleanliness (condition of steel surfaces) 4) Tacking (tack weld quality and location) 5) Backing type and fit (if applicable)	--	X		
YES	f. Configuration and finish of access holes. [2]	--	X		
YES	g. Fit-up of fillet welds [2] 1) Dimensions (alignment, gaps at root) 2) Cleanliness (condition of steel surfaces) 3) Tacking (tack weld quality and location)	--	X		
	2. Inspection tasks during welding:				
YES	a. Use of qualified welders	--	X	AISC 360-10 N5.4-2: AWS D1.1	1705.2.1
YES	b. Control and handling of welding consumables [2] 1) Packaging 2) Exposure control	--	X		
YES	c. No welding over cracked tack welds [2]	--	X		
YES	d. Environmental conditions [2] 1) Wind speed within limits 2) Precipitation and temperature	--	X		
YES	e. WPS followed [2] 1) Settings on weld equipment 2) Travel speed 3) Selected welding materials 4) Shielding gas type/flow rate 5) Preheat applied 6) Interpass temperature maintained (min./max.) 7) Proper position (F, V, H, OH)	--	X		
YES	f. Welding techniques [2] 1) Interpass and final cleaning 2) Each pass within profile limitations 3) Each pass meets quality requirements	--	X		
	3. Inspection tasks after welding:				
YES	a. Welds cleaned	--	X	AISC 360-10 N5.4-3: AWS D1.1	1705.2.1
YES	b. Size, length and location of welds	X	--		
YES	c. Welds meet visual acceptance criteria 1) Crack prohibition 2) Weld/base-metal fusion 3) Crater cross section 4) Weld profiles 5) Weld size 6) Undercut 7) Porosity	X	--		
YES	d. Arc strikes	X	--		
YES	e. k-area [3]	X	--		
YES	f. Backing removed and weld tabs removed (if required)	X	--		
YES	g. Repair activities	X	--		
YES	h. Document acceptance or rejection of welded joint or member	X	--		

1. Inspection tasks noted in this table are the responsibility of the Special Inspector or Quality Assurance Inspector (QAI). The fabricator and erector are responsible for all inspection tasks indicated in AISC 360-10 Section N5 and assigned to the Quality Control Inspector (QCI)

2. Inspection tasks may be coordinated with the fabricator or erector's Quality Control Inspector (QCI) where indicated with this footnote. All other tasks shall be performed by the Special Inspector.

3. When welding of doubler plates, continuity plates or stiffeners has been performed in the k-area, visually inspect the web k-area for cracks within 3 in. (75 mm) of the weld.

VERIFICATION AND INSPECTION TASKS FOR BOLTING STRUCTURAL STEEL[1] (AISC 360-10 Tables N5.6)

SPECIAL INSPECTION REQUIRED	VERIFICATION AND INSPECTION	INSPECTION FREQUENCY		REFERENCED STANDARD	IBC REFERENCE
		CONTINUOUS	PERIODIC		
	1. Inspection tasks prior to bolting:				
YES	a. Manufacturer's certifications available for fastener materials	X	--	AISC 360-10 N5.6-1	1705.2.1
YES	b. Fasteners marked in accordance with ASTM requirements	--	X		
YES	c. Proper fasteners selected for the joint detail (grade, type, bolt length if threads are to be excluded from shear plane)[1]	--	X		
YES	d. Proper bolting procedure selected for joint detail [2]	--	X		
YES	e. Connecting elements, including the appropriate faying surface condition and hole preparation, if specified, meet applicable requirements	--	X		
YES	f. Pre-installation verification testing by installation personnel observed and documented for fastener assemblies and methods used	--	X		
YES	g. Proper storage provided for bolts, nuts, washers and other fastener components	--	X		
	2. Inspection tasks during bolting:				
YES	a. Fastener assemblies, of suitable condition, placed in all holes and washers (if required) are positioned as required [2]	--	X	AISC 360-10 N5.6-2	1705.2.1
YES	b. Joint brought to the snug-tight condition prior to the pretensioning operation [2]	--	X		
YES	c. Fastener component not turned by the wrench prevented from rotating. [2]	--	X		
YES	d. Fasteners are pretensioned in accordance with the RCSC Specification, progressing systematically from the most rigid point toward the free edges	--	X		
	3. Inspection tasks after bolting:				
YES	a. Document acceptance or rejection of bolted connections	X	--	AISC 360-10 N5.6-3	1705.2.1

1. Inspection tasks noted in this table are the responsibility of the Special Inspector or Quality Assurance Inspector (QAI). The fabricator and erector are responsible for all inspection tasks indicated in AISC 360-10 Section N5 and assigned to the Quality Control Inspector (QCI)

2. Inspection tasks may be coordinated with the fabricator or erector's Quality Control Inspector (QCI) where indicated with this footnote. All other tasks shall be performed by the Special Inspector.

VERIFICATION AND INSPECTION OF STEEL CONSTRUCTION OTHER THAN STRUCTURAL STEEL (IBC Table 1705.2.2)

SPECIAL INSPECTION REQUIRED	VERIFICATION AND INSPECTION	INSPECTION FREQUENCY		REFERENCED STANDARD	IBC REFERENCE
		CONTINUOUS	PERIODIC		
	1. Material verification of cold-formed steel deck:				
YES	a. Identification markings to conform to ASTM standards specified in the approved construction documents	--	X	Applicable ASTM Materials Standards	1705.2.2
YES	b. Manufacturer's certified test reports	--	X		
	2. Inspection of welding other than structural steel:				
	a. Cold-formed steel deck:	--	X		
YES	1. Floor and roof deck welds	--	X	AWS D1.3	--
	b. Reinforcing steel:				
YES	1. Verification of weldability of reinforcing steel other than ASTM A 706	--	X	AWS D1.4 ACI 318: Section 3.5.2	1705.2.2
YES	2. Reinforcing steel resisting flexural and axial forces in intermediate and special moment frames, and boundary elements of special structural walls of concrete and shear reinforcement	X	--		
YES	3. Shear reinforcement	X	--		
YES	4. Other reinforcing steel	--	X		

Architects Design Group

Architects and Planners

I.S.K. Reeves V, F.A.I.A.
Ian A. Reeves, A.I.A.
Susan Gantt A.I.A., LEED-AP

333 N. Knowles Ave.
Winter Park, Florida 32789
(407) 647-1706

Corporate Registration
Number: BR1177

FIRE STATION NO.5

CITY OF LONGVIEW

100% BID SET

The architect hereby expressly reserves his common law copyright and other property rights in these drawings. These drawings shall not be reproduced without written permission and consent of the architect, nor are they to be assigned to any party without first obtaining written permission and consent.

REVISIONS/ADDENDA

Number	Description	Date Issued

SHEET TITLE:

SPECIAL INSPECTION TABLES

scale: As indicated
drawn: JC
checked: MS
approved: BK
date: June 5th, 2020

06/05/2020

PROJECT NUMBER:

1006

SHEET NUMBER:

S1.03

shaping the built environment

JQ ENGINEERING, LLP
100 GLASS STREET
214.752.9098
DALLAS, TEXAS 75207
JQENG.COM
PROJECT NO: 3190167
TBPE FIRM F-1294

STATE OF TEXAS
BARRY K. KRIEGER
100546
LICENSED
PROFESSIONAL ENGINEER

VERIFICATION AND INSPECTION OF CONCRETE CONSTRUCTION (IBC TABLE 1705.3)					
SPECIAL INSPECTION REQUIRED	VERIFICATION AND INSPECTION	INSPECTION FREQUENCY		REFERENCED STANDARD	IBC REFERENCE
		CONTINUOUS	PERIODIC		
YES	1. Inspection of reinforcing steel, including prestressing tendons, and placement.	--	X	ACI 318: 3.5, 7.1-7.7	1910.4
YES	2. Inspection of reinforcing steel welding in accordance with Table 1705.2.2, Item 2b.	--	--	AWS D1.4 ACI 318: 3.5.2	--
YES	3. Inspection of anchors cast in concrete where allowable loads have been increased or where strength design is used.	--	X	ACI 318: 8.1.3, 21.1.8	1908.5, 1909.1
YES	4. Inspection of adhesive anchors installed in hardened concrete. Special Inspector must be certified by ACI/CRSI "Adhesive Anchor Installer. A report must be submitted to the licensed design professional and building official documenting, stating how anchor was installed and the Manufacturer's Printed Installation Instructions per ACI 318-11 (D.9.2.2 and D.9.2.4)	X	--	ACI 318: Appendix D	1909.1
YES	5. Inspection of mechanical anchors installed in hardened concrete.	--	X	ACI 318: 3.8.6, 8.1.3, 21.2.8	1909.1
YES	6. Verifying use of required design mix.	--	X	ACI 318: Ch. 4, 5.2-5.4	1904.2, 1910.2, 1910.3
YES	7. At the time fresh concrete is sampled to fabricate specimens for strength tests, perform slump and air content tests, and determine the temperature of the concrete.	X	--	ASTM C 172 ASTM C 31 ACI 318: 5.6, 5.8	1910.10
YES	8. Inspection of concrete and shotcrete placement for proper application techniques.	X	--	ACI 318: 5.9, 5.10	1910.6, 1910.7, 1910.8
YES	9. Inspection for maintenance of specified curing temperature and techniques.	--	X	ACI 318: 5.11-5.13	1910.9
	10. Inspection of prestressed concrete:				
YES	a. Application of prestressing forces:	X	--	ACI 318: 18.20 ACI 318: 18.18.4	--
YES	b. Grouting of bonded prestressing tendons in the seismic-force-resisting system:	X	--		
YES	11. Erection of precast concrete members.	--	X	ACI 318: Ch. 16	--
YES	12. Verification of in-situ concrete strength, prior to stressing of tendons in post-tensioned concrete and prior to removal of shores and forms from beams and structural slabs.	--	X	ACI 318: 6.2	--
YES	13. Inspect formwork for shape, location and dimensions of the concrete members being formed.	--	X	ACI 318: 6.1.1	--

LEVEL B VERIFICATION AND INSPECTION OF MASONRY CONSTRUCTION (ACI 530 Table 1.18.2)			
SPECIAL INSPECTION REQUIRED	VERIFICATION, INSPECTION AND TESTING	INSPECTION FREQUENCY	
		CONTINUOUS	PERIODIC
	MINIMUM TESTS		
YES	Verification of Slump flow and VSI as delivered to the site in accordance with Article 1.5 B.1.b.3 for self-consolidating grout	--	--
YES	Verification of f'_m and f'_{AAC} prior to construction, except where specifically exempted by this Code	--	--
	INSPECTION TASKS		
YES	1. Verify compliance with the approved submittal	--	X
	2. As masonry construction begins, verify that the following are in compliance:		
YES	a. Proportions of site-prepared mortar	--	X
YES	b. Construction of mortar joints	--	X
YES	c. Grade and size of prestressing tendons and anchorages	--	X
YES	d. Location of reinforcement, connectors, and prestressing tendons and anchorages	--	X
YES	e. Prestressing technique	--	X
	3. Prior to grouting, verify that the following are in compliance:		
YES	a. Grout space	--	X
YES	b. Grade, type and size of reinforcement and anchor bolts, and prestressing tendons and anchorages	--	X
YES	c. Placement of reinforcement, connectors and prestressing tendons and anchorages	--	X
YES	d. Proportions of site-prepared grout and prestressing grout for bonded tendons	--	X
YES	e. Construction of mortar joints	--	X
	4. Verify during construction:		
YES	a. Size and location of structural elements	--	X
YES	b. Type, size and location of anchors, including other details of anchorage of masonry to structural members, frames or other construction	--	X
YES	c. Welding of reinforcement	X	--
YES	d. Preparation, construction and protection of masonry during cold weather (temperature below 40°F (4.4°C)) or hot weather (temperature above 90°F (32.2°C))	--	X
YES	e. Application and measurement of prestressing force	X	--
YES	f. Placement of grout and prestressing grout for bonded tendons is in compliance	X	--
YES	5. Observe preparation of grout specimens, mortar specimens and/or prisms	--	X

VERIFICATION AND INSPECTION OF SOILS (IBC TABLE 1705.6)			
SPECIAL INSPECTION REQUIRED	VERIFICATION, INSPECTION AND TESTING	INSPECTION FREQUENCY	
		CONTINUOUS	PERIODIC
YES	1. Verify materials below shallow foundations are adequate to achieve the design bearing capacity.	--	X
YES	2. Verify excavations are extended to proper depth and have reached proper material.	--	X
YES	3. Perform classification and testing of controlled fill materials.	--	X
YES	4. Verify use of proper materials, densities and lift thicknesses during placement and compaction of controlled fill.	X	--
YES	5. Prior to placement of compacted fill, observe subgrade and verify that site has been prepared properly.	--	X

Architects Design Group

Architects and Planners

I.S.K. Reeves V, F.A.I.A.
Ian A. Reeves, A.I.A.
Susan Gantt A.I.A., LEED-AP

333 N. Knowles Ave.
Winter Park, Florida 32789
(407) 647-1706

Corporate Registration Number: BR1177

FIRE STATION NO.5

CITY OF LONGVIEW

100% BID SET

The architect hereby expressly reserves his common law copyright and other property rights in these drawings. These drawings shall not be reproduced without written permission and consent of the architect, nor are they to be assigned to any party without first obtaining written permission and consent.

REVISIONS/ADDENDA

Number	Description	Date Issued

SHEET TITLE:

SPECIAL INSPECTION TABLES

scale: As indicated
drawn: JC
checked: MS
approved: BK
date: June 5th, 2020

PROJECT NUMBER:

1006

SHEET NUMBER:

S1.04

shaping the built environment

JQ ENGINEERING, LLP
100 GLASS STREET
214.752.9098
DALLAS, TEXAS 75207
JQENG.COM
PROJECT NO: 3190167
TBPE FIRM F-1294

STATE OF TEXAS
BARRY K. KRIEGER
100546
LICENSED
PROFESSIONAL ENGINEER

06/05/2020

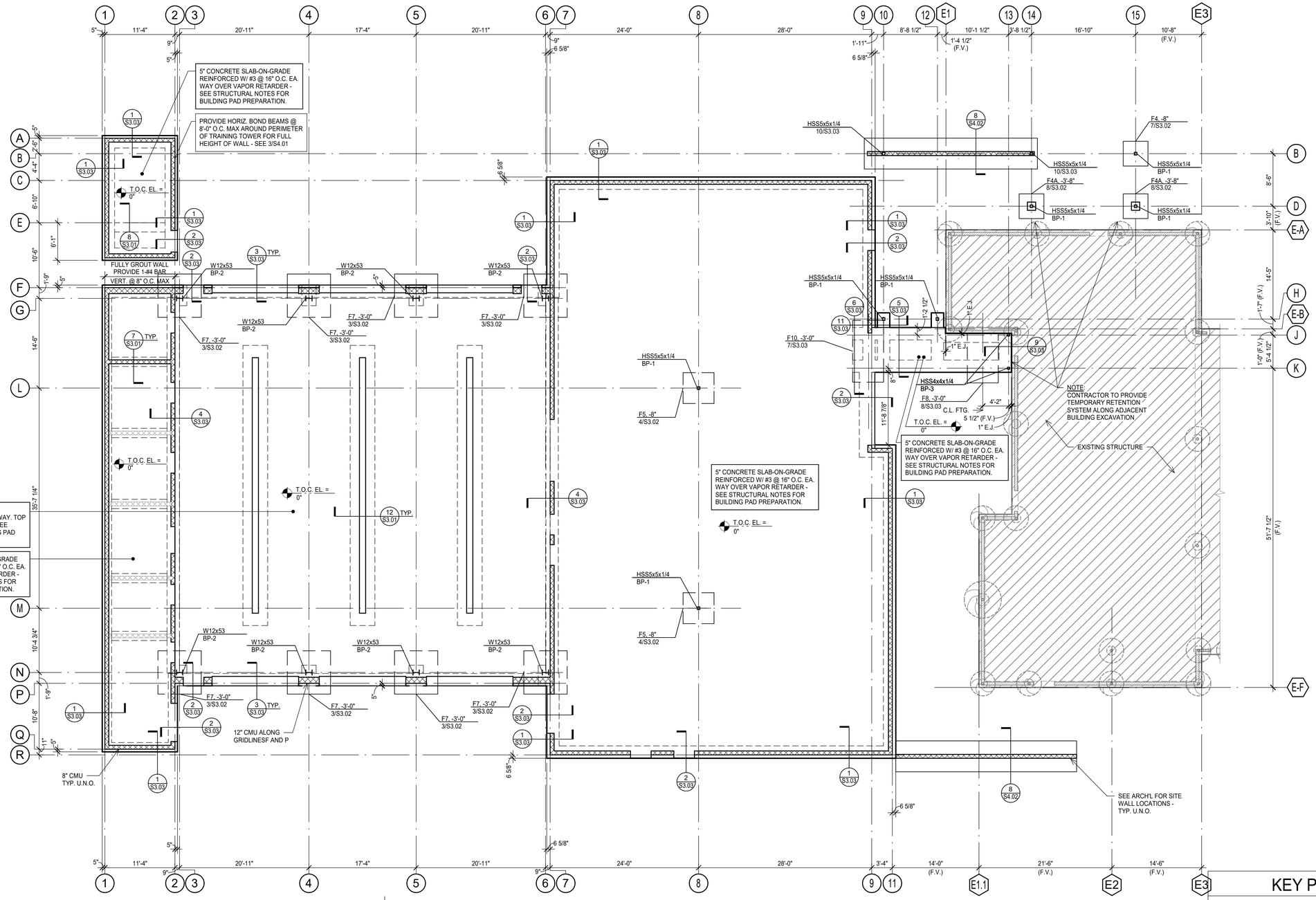

north

1 FOUNDATION PLAN

SCALE: 1/8" = 1'-0"

PLAN NOTES:

1. FINISH FLOOR ELEVATION = 0'-0", UNLESS NOTED OTHERWISE. ACTUAL ELEVATION 37'2-8" = 0'-0".
2. TOP OF CONCRETE ELEVATION (T.O.C. EL.) = FINISH FLOOR. UNLESS RECESSED TO RECEIVE FLOORING MATERIALS.
3. REFER TO THE ARCHITECTURAL DRAWINGS FOR EXACT LOCATIONS OF FLOOR RECESSES, DROPS AND SLOPES NOT DIMENSIONED ON PLAN.
4. TYPICAL CONCRETE SLAB THICKNESS IS 5" (OVERALL), UNLESS NOTED OTHERWISE.

SHEET INDEX:

STRUCTURAL NOTES	-S1.01, S1.02
TYPICAL DETAILS	-S3.01, S3.02
FOOTING SCHEDULE	-S3.02
BASE PLATE SCHEDULE	-S5.01

JQ HAS ATTEMPTED BY STUDY OF ORIGINAL CONSTRUCTION DOCUMENTS TO DETERMINE EXISTING DIMENSIONS, THE CONDITION OF VARIOUS STRUCTURAL ELEMENTS, AND EXISTING CONDITIONS.

HOWEVER, AS SOME CONDITIONS CANNOT BE DETERMINED UNTIL AFTER DEMOLITION OF THE EXISTING BUILDING FINISHES, THE CONTRACTOR MUST CONSIDER AND ALLOW FOR THE FACT THAT DIMENSIONS, THE CONDITION OF STRUCTURAL ELEMENTS, AND DETAIL CONDITIONS MAY BE DIFFERENT FROM THOSE SHOWN ON THESE DRAWINGS.

NOTIFY ENGINEER WHERE CONDITIONS ARE DIFFERENT FROM THOSE SHOWN ON THESE DRAWINGS.

shaping the built environment
JQ ENGINEERING, LLP
100 GLASS STREET
214.752.9098
DALLAS, TEXAS 75207
JQENG.COM
PROJECT NO: 3190167
TBPE FIRM F-1294

STATE OF TEXAS
BARRY K. KRIEGER
100546
LICENSED PROFESSIONAL ENGINEER
04/05/2020

KEY PLAN

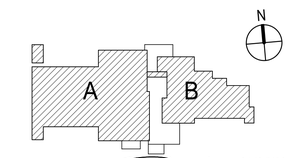

Architects Design Group

Architects and Planners

I.S.K. Reeves V, F.A.I.A.
Ian A. Reeves, A.I.A.
Susan Gantt A.I.A., LEED-AP

333 N. Knowles Ave.
Winter Park, Florida 32789
(407) 647-1706

Corporate Registration Number: BR1177

FIRE STATION NO.5

CITY OF LONGVIEW

100% BID SET

The architect hereby expressly reserves his common law copyright and other property rights in these drawings. These drawings shall not be reproduced without written permission and consent of the architect, nor are they to be assigned to any party without first obtaining written permission and consent.

REVISIONS/ADDENDA

Number	Description	Date Issued

SHEET TITLE:

FOUNDATION PLAN

scale: As indicated
drawn: JC
checked: MS
approved: BK
date: June 5th, 2020

PROJECT NUMBER:

1006

SHEET NUMBER:

S2.01

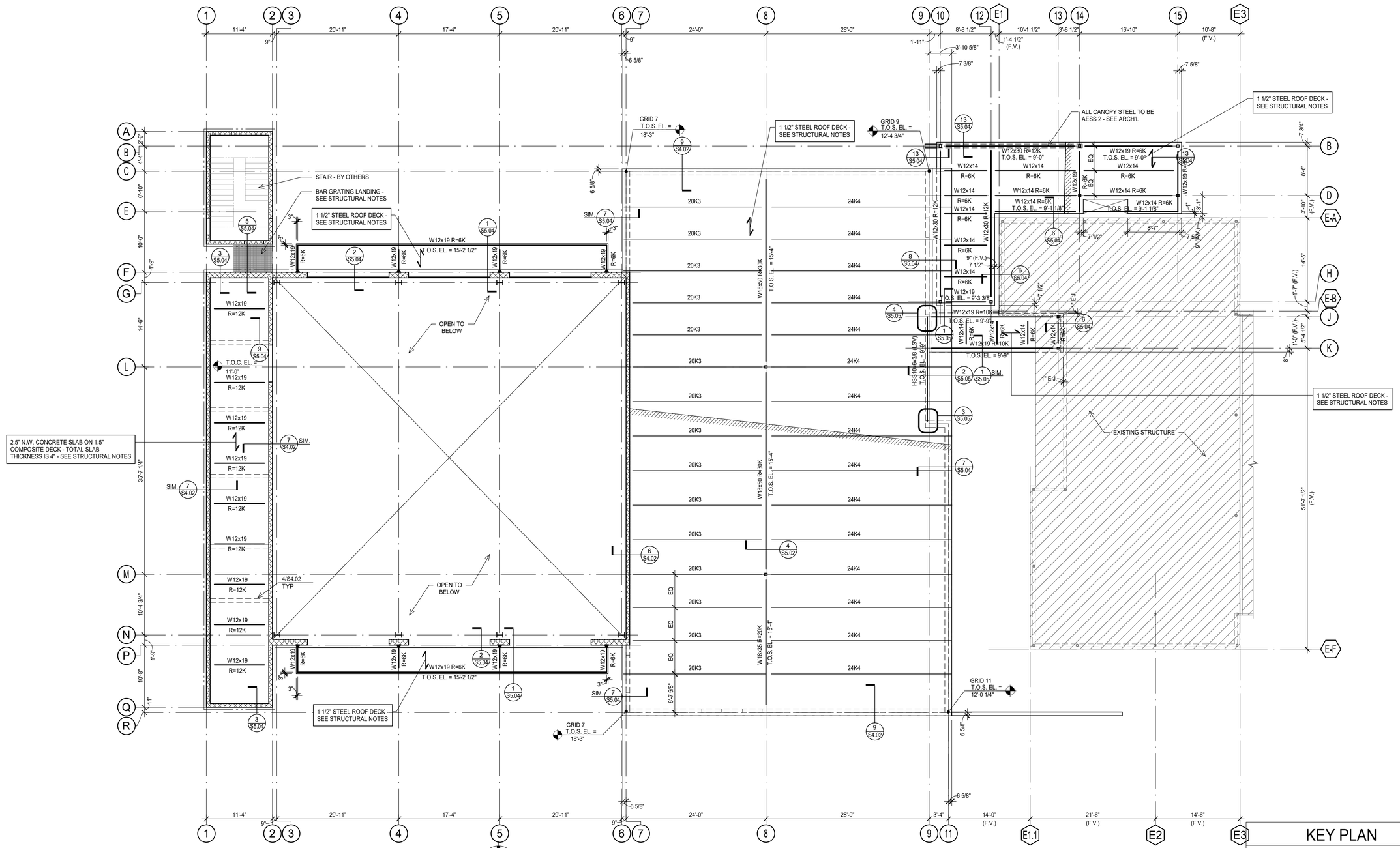

north

1 LOW ROOF & MEZZANINE FRAMING PLAN

SCALE: 1/8" = 1'-0"

PLAN NOTES:

1. TOP OF ROOF STRUCTURE IS SLOPED FOR DRAINAGE. SEE ELEVATIONS NOTED ON THE PLAN. SLOPES SHALL BE UNIFORM BETWEEN COLUMN CENTERLINES, UNLESS NOTED OTHERWISE.
2. TOP OF STEEL ELEVATION (T.O.S. EL.) = TOP OF BEAM, JOIST, OR MEMBER SUPPORTING ROOF DECK = BOTTOM OF DECK.
3. SEE MECHANICAL, ELECTRICAL, AND PLUMBING DRAWINGS FOR LOCATION AND DIMENSIONS OF ROOF PENETRATIONS NOT DIMENSIONED ON PLAN. CONTRACTOR TO COORDINATE.
5. JOISTS NOTED AS "SP" ARE SPECIAL DESIGNS TO BE PROVIDED BY SUPPLIER FOR LOADINGS INDICATED.
6. DESIGN JOISTS FOR A SERVICE LEVEL NET UPLIFT OF 26 POUNDS PER SQUARE FOOT (PSF) FOR WIND LOADING. DESIGN WITHIN 6 FEET OF ROOF EDGES FOR 31 PSF NET UPLIFT.
7. PROVIDE BEAM FLANGE BRACING PER 7/S5.03 WHERE NOTED "*" ON PLAN.

SHEET INDEX:

STRUCTURAL NOTES	-S1.01, S1.02
TYPICAL STEEL DETAILS	-S5.01, S5.02, S5.03,
STEEL DETAILS	-S5.04
VERTICAL BRACES	-S6.01

JQ HAS ATTEMPTED BY STUDY OF ORIGINAL CONSTRUCTION DOCUMENTS TO DETERMINE EXISTING DIMENSIONS, THE CONDITION OF VARIOUS STRUCTURAL ELEMENTS, AND EXISTING CONDITIONS.

HOWEVER, AS SOME CONDITIONS CANNOT BE DETERMINED UNTIL AFTER DEMOLITION OF THE EXISTING BUILDING FINISHES, THE CONTRACTOR MUST CONSIDER AND ALLOW FOR THE FACT THAT DIMENSIONS, THE CONDITION OF STRUCTURAL ELEMENTS, AND DETAIL CONDITIONS MAY BE DIFFERENT FROM THOSE SHOWN ON THESE DRAWINGS.

NOTIFY ENGINEER WHERE CONDITIONS ARE DIFFERENT FROM THOSE SHOWN ON THESE DRAWINGS.

KEY PLAN

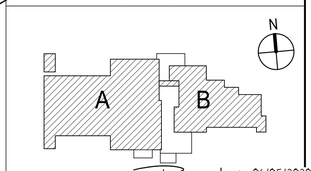

shaping the built environment

JQ ENGINEERING, LLP
100 GLASS STREET
214.752.9098
DALLAS, TEXAS 75207
JQENG.COM
PROJECT NO: 3190167
TBPE FIRM F-1294

STATE OF TEXAS
BARRY K. KRIEGER
100546
LICENSED
PROFESSIONAL ENGINEER
06/05/2020

Architects Design Group

Architects and Planners

I.S.K. Reeves V, F.A.I.A.
Ian A. Reeves, A.I.A.
Susan Gantt A.I.A., LEED-AP

333 N. Knowles Ave.
Winter Park, Florida 32789
(407) 647-1706

Corporate Registration Number: BR1177

FIRE STATION NO.5

CITY OF LONGVIEW

100% BID SET

The architect hereby expressly reserves his common law copyright and other property rights in these drawings. These drawings shall not be reproduced without written permission and consent of the architect, nor are they to be assigned to any party without first obtaining written permission and consent.

REVISIONS/ADDENDA

Number	Description	Date Issued

SHEET TITLE:

LOW ROOF & MEZZANINE FRAMING PLAN

scale:	As indicated
drawn:	JC
checked:	MS
approved:	BK
date:	June 5th, 2020

PROJECT NUMBER:

1006

SHEET NUMBER:

S2.02

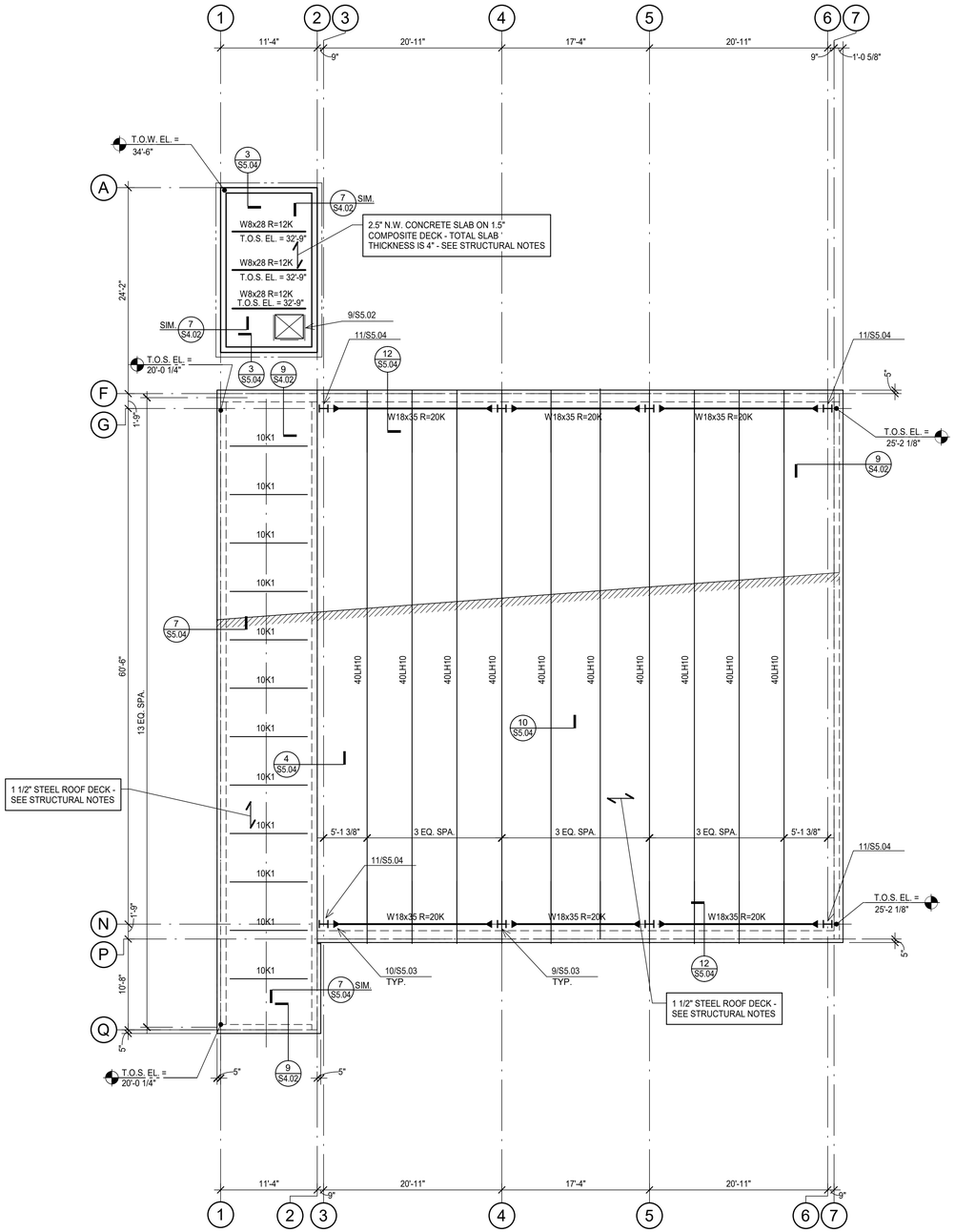

north

1 APPARATUS BAY & TOWER ROOF FRAMING PLAN

SCALE: 1/8" = 1'-0"

PLAN NOTES:

1. TOP OF ROOF STRUCTURE IS SLOPED FOR DRAINAGE. SEE ELEVATIONS NOTED ON THE PLAN. SLOPES SHALL BE UNIFORM BETWEEN COLUMN CENTERLINES, UNLESS NOTED OTHERWISE.
2. TOP OF STEEL ELEVATION (T.O.S. EL.) = TOP OF BEAM, JOIST, OR MEMBER SUPPORTING ROOF DECK = BOTTOM OF DECK.
3. SEE MECHANICAL, ELECTRICAL, AND PLUMBING DRAWINGS FOR LOCATION AND DIMENSIONS OF ROOF PENETRATIONS NOT DIMENSIONED ON PLAN. CONTRACTOR TO COORDINATE.
4. STEEL JOISTS SHALL BE CENTERED ON AND EQUALLY SPACED BETWEEN COLUMN CENTERLINES, UNLESS NOTED OTHERWISE.
5. DESIGN JOISTS FOR A SERVICE LEVEL NET UPLIFT OF 26 POUNDS PER SQUARE FOOT (PSF) FOR WIND LOADING. DESIGN WITHIN 6 FEET OF ROOF EDGES FOR 31 PSF NET UPLIFT.

SHEET INDEX:

STRUCTURAL NOTES	-S1.01, S1.02
TYPICAL STEEL DETAILS	-S5.01, S5.02, S5.03,
STEEL DETAILS	-S5.04

JQ HAS ATTEMPTED BY STUDY OF ORIGINAL CONSTRUCTION DOCUMENTS TO DETERMINE EXISTING DIMENSIONS, THE CONDITION OF VARIOUS STRUCTURAL ELEMENTS, AND EXISTING CONDITIONS.

HOWEVER, AS SOME CONDITIONS CANNOT BE DETERMINED UNTIL AFTER DEMOLITION OF THE EXISTING BUILDING FINISHES, THE CONTRACTOR MUST CONSIDER AND ALLOW FOR THE FACT THAT DIMENSIONS, THE CONDITION OF STRUCTURAL ELEMENTS, AND DETAIL CONDITIONS MAY BE DIFFERENT FROM THOSE SHOWN ON THESE DRAWINGS.

NOTIFY ENGINEER WHERE CONDITIONS ARE DIFFERENT FROM THOSE SHOWN ON THESE DRAWINGS.

KEY PLAN

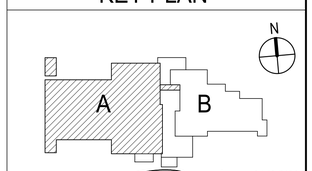

shaping the built environment

JQ ENGINEERING, LLP
100 GLASS STREET
214.752.9098
DALLAS, TEXAS 75207
JQENG.COM
PROJECT NO: 3190167
TBPE FIRM F-1294

STATE OF TEXAS
BARRY K. KRIEGER
100546
LICENSED
PROFESSIONAL ENGINEER

04/05/2020

Architects Design Group

Architects and Planners

I.S.K. Reeves V, F.A.I.A.
Ian A. Reeves, A.I.A.
Susan Gantt A.I.A., LEED-AP

333 N. Knowles Ave.
Winter Park, Florida 32789
(407) 647-1706

Corporate Registration Number: BR1177

FIRE STATION NO.5

CITY OF LONGVIEW

100% BID SET

The architect hereby expressly reserves his common law copyright and other property rights in these drawings. These drawings shall not be reproduced without written permission and consent of the architect, nor are they to be assigned to any party without first obtaining written permission and consent.

REVISIONS/ADDENDA

Number	Description	Date Issued

SHEET TITLE:

APPARATUS BAY & TOWER ROOF FRAMING PLAN

scale:	As indicated
drawn:	JC
checked:	MS
approved:	BK
date:	June 5th, 2020

PROJECT NUMBER:

1006

SHEET NUMBER:

S2.03

DOWEL SCHEDULE

MARK	SIZE	A	B
DWL.-A	#4	8"	3'-0"
DWL.-B	#4	2'-0"	2'-0"
DWL.-C	#4	-	4'-0"
DWL.-D	3/4" DIA. THD.	-	4'-0"
DWL.-E	1/2" DIA. THD.	-	3'-0"

NOTES:

1. SCHEDULED DOWELS ARE MARKED "DWL." ON THE SECTIONS AND DETAILS.
2. DOWEL SPACING TO BE THE SAME AS VERTICAL BEAM OR WALL REINFORCEMENT UNLESS NOTED OTHERWISE ON DETAILS.
3. DOWELS WITH "THD." IN "SIZE" COLUMN SHALL BE RICHMOND "CONTINUOUS THREADED LAGSTUD (2/25)" WITH RICHMOND "STANDARD 1/2"x4" 2/15 ANCHOR W/ WASHER" FOR 1/2" DIA. DOWELS AND "STANDARD 3/4"x6" 2/15 ANCHOR W/ WASHER" ANCHORS FOR 3/4"Ø DOWELS OR EQUAL.

1 DOWEL SCHEDULE
NO SCALE

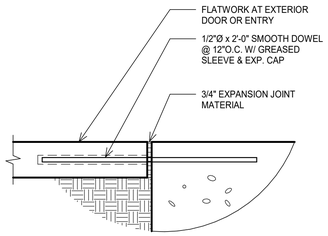

2 TYPICAL FLATWORK AT EXTERIOR DOORS AND ENTRIES DETAIL
NO SCALE

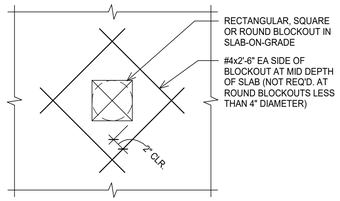

3 TYPICAL ADDITIONAL REINFORCING AT BLOCKOUT IN SLAB-ON-GRADE DETAIL
NO SCALE

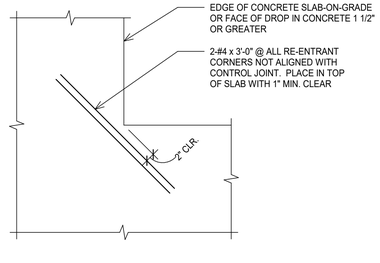

4 TYPICAL SLAB-ON-GRADE RE-ENTRANT CORNER REINFORCING DETAIL
NO SCALE

NOTE:
PROVIDE ONE OF THE FOLLOWING SLIP DOWELS:
- PNA CONSTRUCTION TECHNOLOGIES 1/4" x 4 1/2" x 4 1/2" "DIAMOND DOWEL" PLATE DOWEL SYSTEM.
- GREENSTREAK 5/8" DIA. SMOOTH x 24" "SPEED DOWEL" SYSTEM.
- 1/2" DIA. x 2'-0" A36 SMOOTH ROD.

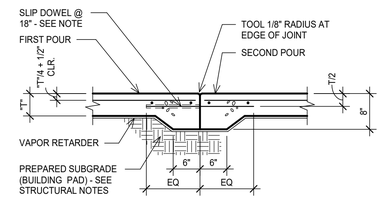

CONSTRUCTION JOINT

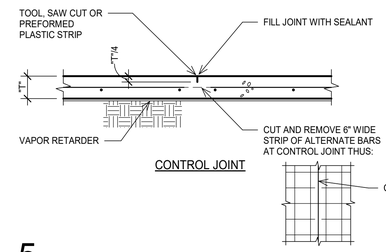

CONTROL JOINT

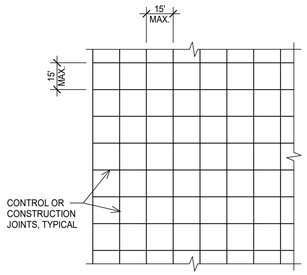

SLAB-ON-GRADE NOTES:

1. SEE PLAN FOR THICKNESS OF SLAB (T) AND REINFORCING.
2. SAWCUT JOINTS WITH IN THE TIME FRAME NOTED BELOW:
   a. 12 HOURS FOR SLABS COVERED BY FINISHES OR NON PUBLIC SPACES.
   b. 4 HOUR FOR SLABS EXPOSED TO PUBLIC VIEW OR WHERE NOTED "SOFF-CUT" BRAND SAW SHALL BE USED.
3. IF METAL FORMS ARE USED, REMOVE THEM BEFORE PLACING ADJACENT SLAB.
4. FOR SLABS WITH THICKNESS (T) GREATER THAN 6", THICKENED EDGES ARE NOT REQUIRED AT JOINTS.
5. PROVIDE A CONSTRUCTION OR A CONTROL JOINT ON THE CENTERLINES OF COLUMNS.
6. LAP REINFORCING 38 BAR DIAMETER MINIMUM.

5 TYPICAL SLAB-ON-GRADE DETAIL
NO SCALE

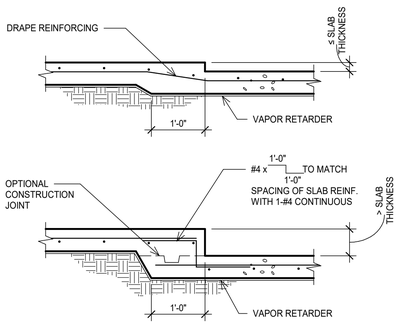

6 TYPICAL DROP IN SLAB-ON-GRADE DETAIL
NO SCALE

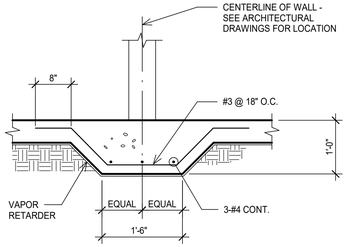

7 TYPICAL SLAB-ON-GRADE STIFFENER BEAM DETAIL
NO SCALE

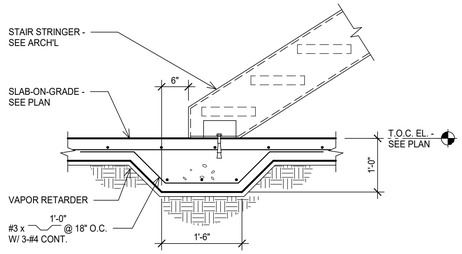

NOTES:

1. EXTEND THICKENED SLAB 1'-0" BEYOND EA. SIDE OF STAIR.
2. BASE CONNECTION TO BE PROVIDED BY STAIR FABRICATOR. CONNECTION SHALL OCCUR ON INSIDE OF TREAD AND BE CONCEALED BELOW FIRST TREAD.

8 TYPICAL THICKENED SLAB AT STAIR BASE DETAIL
NO SCALE

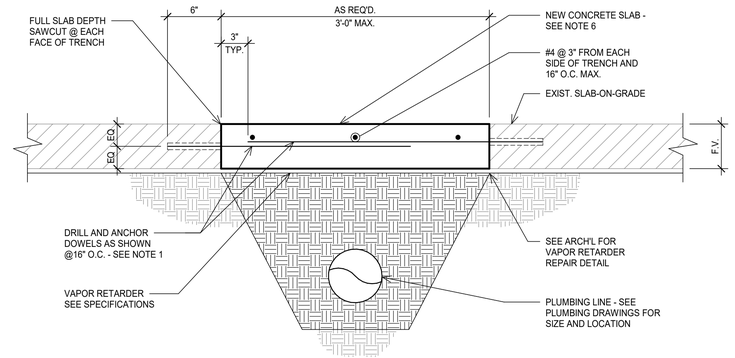

NOTES:

1. ADHESIVE ANCHORING SYSTEM SHALL BE HILTI "HIT-HY 200" OR SIMPSON "ACRYLIC-TIE". FOLLOW ALL MANUFACTURER'S INSTALLATION INSTRUCTIONS.
2. VAPOR RETARDER SHALL MEET THE PROPERTIES IDENTIFIED IN THE SPECIFICATIONS
3. LAP JOINTS IN VAPOR RETARDER 6" MIN. USE MANUFACTURER'S STANDARD ADHESIVE OR PRESSURE SENSITIVE TAPE FOR SEALING MEMBRANE AT SEAMS, PIPE PENETRATIONS, TEARS, ETC.
4. PROVIDE 2-#4x2'-0" DIAGONAL BARS AT RE-ENTRANT CORNERS IN SAWCUT. PLACE AT MID-DEPTH OF SLAB.
5. SOIL REMOVED FOR SLAB TRENCH SHALL BE REPLACED AND RECOMPACTED TO A MINIMUM OF 95% STANDARD PROCTER DENSITY (ASTM D698). SEE STRUCTURAL NOTES.
6. PLACE SLAB BACK TO THICKNESS TO MATCH EXISTING WITH A MINIMUM 3,000 PSI NORMAL WEIGHT CONCRETE AND A RATIO OF 0.50 OR LESS.
7. THE CONTRACTOR SHALL ENSURE THAT TRENCHING FOR THE UTILITY LINE IS NOT OVER-EXCAVATED AND THAT NO PORTION OF THE SURROUNDING SLAB-ON-GRADE IS LEFT UNSUPPORTED.
8. CONTRACTOR SHALL PROVIDE A COLD JOINT EVERY 30 LINEAR FEET IN THE PORTION OF NEW CONCRETE SLAB THAT IS PLACED DUE TO UNDER-SLAB TRENCHING.

13 TYPICAL TRENCH DETAIL FOR UNDER-SLAB PLUMBING LINES
NO SCALE

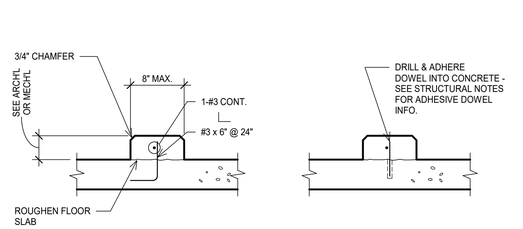

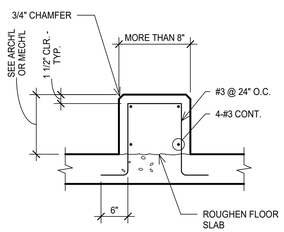

CAST-IN-PLACE

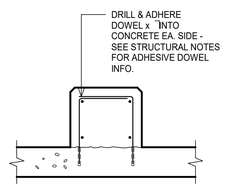

DRILLED-IN ALTERNATE

9 TYPICAL CONCRETE CURB DETAILS
NO SCALE

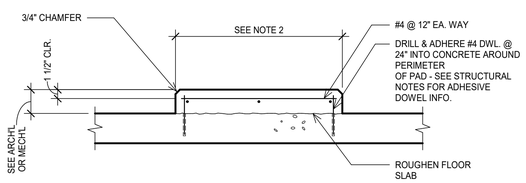

NOTES:

1. EQUIPMENT PADS TO BE PROVIDED UNDER EQUIPMENT SUPPORTED ON SLAB-ON-GRADE OR ELEVATED SLABS.
2. COORDINATE MECHANICAL PAD SIZE, LOCATION AND EMBEDDED ITEMS WITH MEP DRAWINGS AND EQUIPMENT MANUFACTURER.

10 TYPICAL MECHANICAL EQUIPMENT PAD DETAIL
NO SCALE

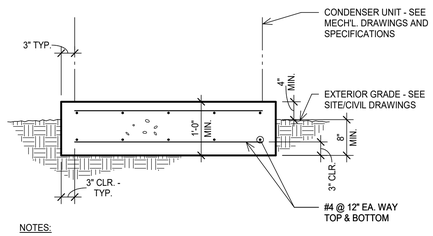

NOTES:

1. COORDINATE ANY EMBEDDED ITEMS IN PAD W/ MECHANICAL, ELECTRICAL & PLUMBING DRAWINGS.
2. VERIFY PAD DIMENSIONS WITH UNIT MANUFACTURER PRIOR TO CONSTRUCTION.
3. PAD SHALL BE PLACED ON UNDISTURBED EXISTING SOIL OR COMPACTED FILL.
4. SEE MEP, SITE AND/OR CIVIL DRAWINGS FOR PAD LOCATION.

11 CONDENSER UNIT PAD DETAIL
NO SCALE

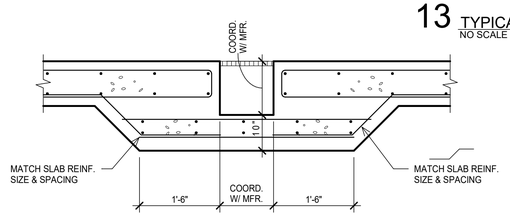

12 TRENCH SECTION
NO SCALE

Architects Design Group

Architects and Planners

I.S.K. Reeves V, F.A.I.A.
Ian A. Reeves, A.I.A.
Susan Gantt A.I.A., LEED-AP

333 N. Knowles Ave.
Winter Park, Florida 32789
(407) 647-1706

Corporate Registration Number: BR1177

FIRE STATION NO.5

CITY OF LONGVIEW

100% BID SET

The architect hereby expressly reserves his common law copyright and other property rights in these drawings. These drawings shall not be reproduced without written permission and consent of the architect, nor are they to be assigned to any party without first obtaining written permission and consent.

REVISIONS/ADDENDA

Number	Description	Date Issued

SHEET TITLE:

TYPICAL CONCRETE DETAILS

scale: As indicated
drawn: JC
checked: MS
approved: BK
date: June 5th, 2020

PROJECT NUMBER:

1006

SHEET NUMBER:

S3.01

shaping the built environment
JQ ENGINEERING, LLP
100 GLASS STREET
214.752.9098
DALLAS, TEXAS 75207
JQENG.COM
PROJECT NO: 3190167
TBPE FIRM F-1294
STATE OF TEXAS
BARRY K. KRIEGER
100546
LICENSED PROFESSIONAL ENGINEER
06/05/2020

SPREAD FOOTING SCHEDULE

MARK	DIMENSIONS			REINFORCING		CAPACITY (KIPS)	REMARKS
	L	W	DEPTH	TRANSVERSE	LONGITUDINAL		
F4	4'-0"	4'-0"	1'-4"	6-#5	6-#5	32k	-
F4A	4'-0"	4'-0"	1'-4"	6-#5	6-#5	32k	NOTE 1
F5	5'-0"	5'-0"	2'-0"	7-#6	7-#6	50k	-
F7	7'-0"	7'-0"	2'-0"	7-#5 TOP & BOT.	7-#5 TOP & BOT.	98k	-
F8	8'-0"	5'-0"	1'-0"	8-#5	5-#5	80k	NOTE 1
F10	10'-0"	5'-0"	1'-0"	10-#5	5-#5	100k	-

NOTES:
1. BOTTOM OF FOOTING ELEVATION TO MATCH ELEVATION OF ADJACENT EXISTING BELLED PIERS. CONTRACTOR TO FIELD VERIFY ELEVATION OF ADJACENT BELLED PIERS AND ADJUST FOOTING THICKNESS ACCORDINGLY. IF FOOTING THICKNESS EXCEEDS 2'-0", CONTACT EOR. ADDITIONAL PLINTH AND/OR REINFORCING MAY BE REQUIRED.

1 SPREAD FOOTING SCHEDULE
SCALE: 3/4" = 1'-0"

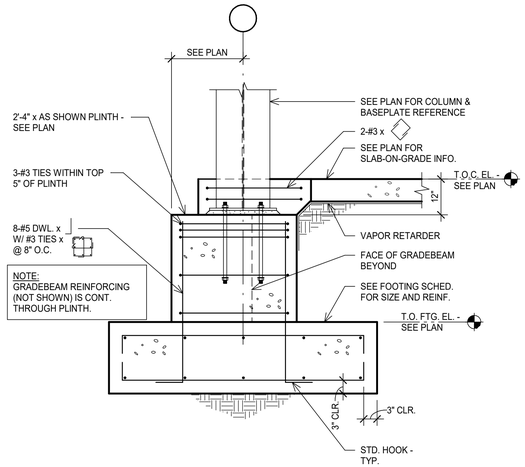

2 TYPICAL ISOLATED EXTERIOR FOOTING DETAIL
NO SCALE

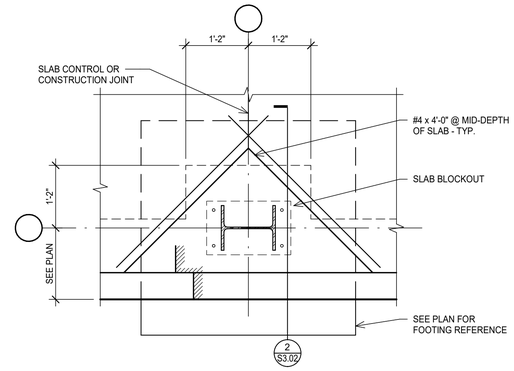

PLAN

3 TYPICAL TOP OF EXTERIOR FOOTING DETAIL
NO SCALE

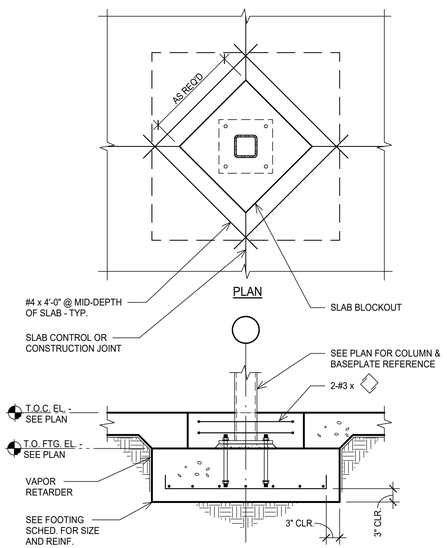

PLAN

4 TYPICAL INTERIOR FOOTING DETAIL
NO SCALE

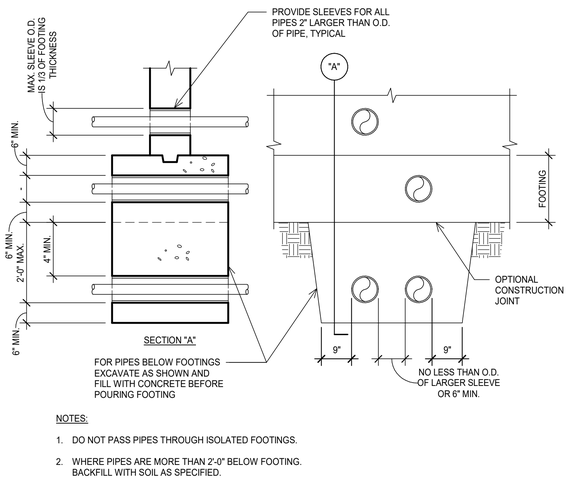

SECTION "A"

NOTES:

1. DO NOT PASS PIPES THROUGH ISOLATED FOOTINGS.
2. WHERE PIPES ARE MORE THAN 2'-0" BELOW FOOTING. BACKFILL WITH SOIL AS SPECIFIED.

5 TYPICAL PIPES AND TRENCHES AT FOOTINGS
NO SCALE

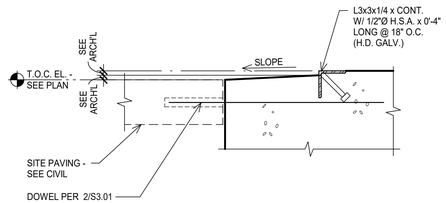

6 SECTION AT APPARATUS BAY DOOR
NO SCALE

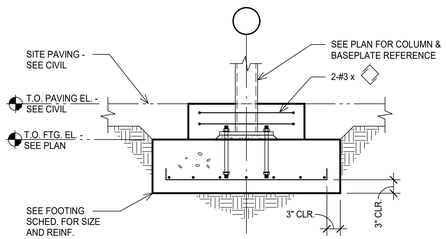

7 TYPICAL CANOPY FOOTING DETAIL
NO SCALE

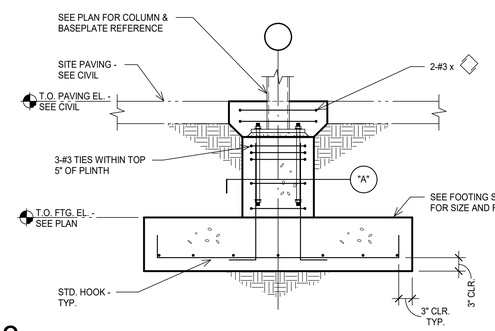

8 EXTERIOR FOOTING DETAIL
NO SCALE

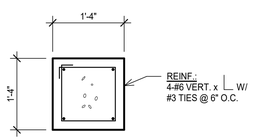

SECTION "A"

Architects Design Group

Architects and Planners

I.S.K. Reeves V, F.A.I.A.
Ian A. Reeves, A.I.A.
Susan Gantt A.I.A., LEED-AP

333 N. Knowles Ave.
Winter Park, Florida 32789
(407) 647-1706

Corporate Registration Number: BR1177

FIRE STATION NO.5

CITY OF LONGVIEW

100% BID SET

The architect hereby expressly reserves his common law copyright and other property rights in these drawings. These drawings shall not be reproduced without written permission and consent of the architect, nor are they to be assigned to any party without first obtaining written permission and consent.

REVISIONS/ADDENDA

Number	Description	Date Issued

SHEET TITLE:

TYPICAL CONCRETE DETAILS

scale: As indicated
drawn: JC
checked: MS
approved: BK
date: June 5th, 2020

PROJECT NUMBER:

1006

SHEET NUMBER:

S3.02

shaping the built environment
JQ ENGINEERING, LLP
100 GLASS STREET
214.752.9098
DALLAS, TEXAS 75207
JQENG.COM
PROJECT NO: 3190167
TBPE FIRM F-1234
STATE OF TEXAS
BARRY K. KRIEGER
100546
LICENSED
PROFESSIONAL ENGINEER
06/05/2020

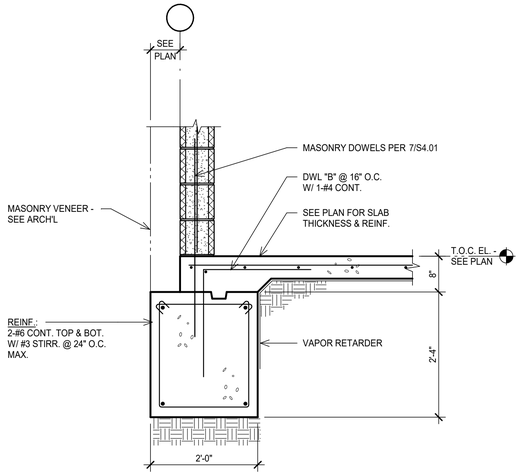

1 SECTION
SCALE: 3/4" = 1'-0"

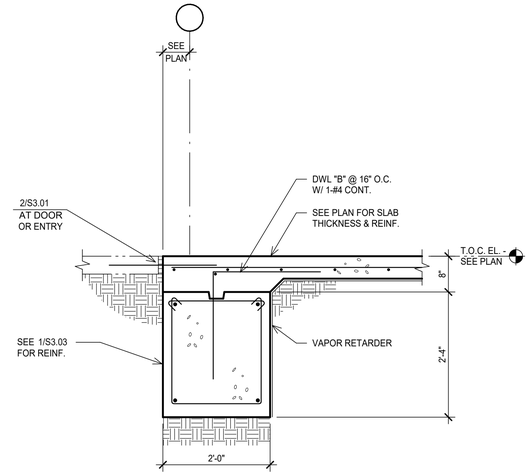

2 SECTION
SCALE: 3/4" = 1'-0"

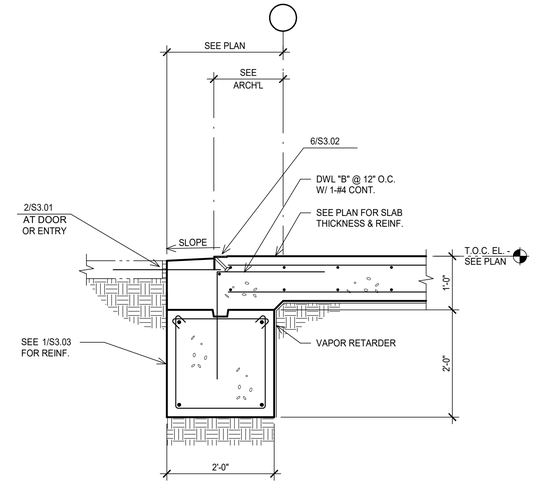

3 SECTION
SCALE: 3/4" = 1'-0"

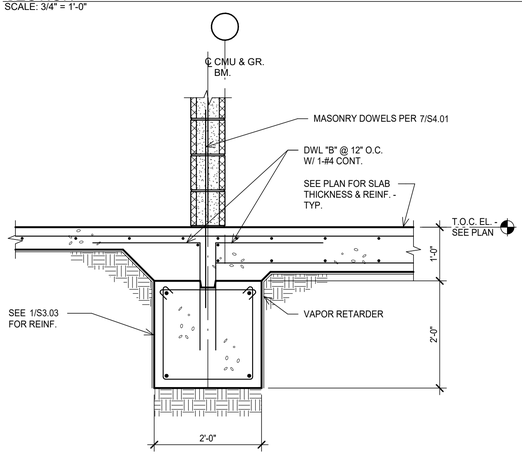

4 SECTION
SCALE: 3/4" = 1'-0"

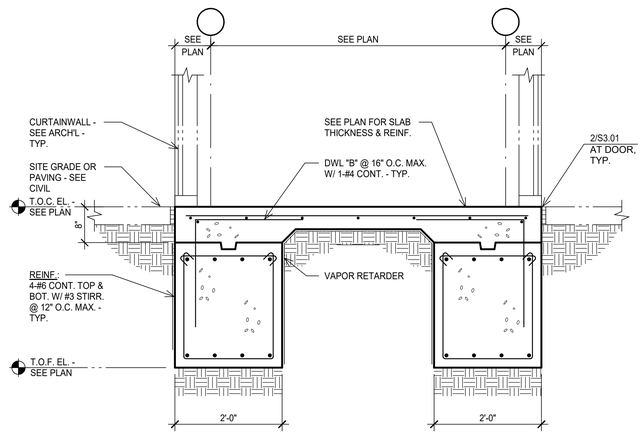

5 SECTION
SCALE: 3/4" = 1'-0"

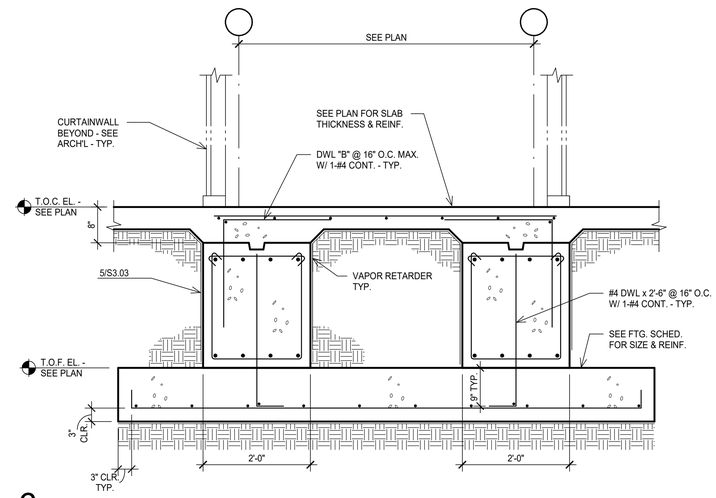

6 SECTION
SCALE: 3/4" = 1'-0"

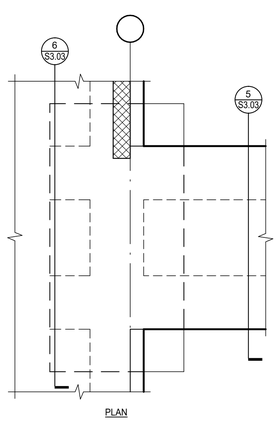

7 TOP OF FOOTING DETAIL
SCALE: 3/8" = 1'-0"

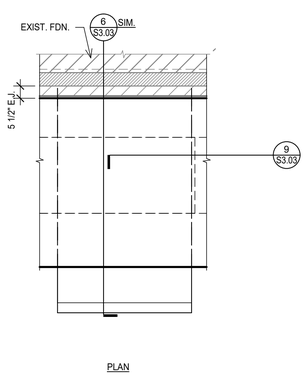

8 TOP OF FOOTING DETAIL
SCALE: 3/8" = 1'-0"

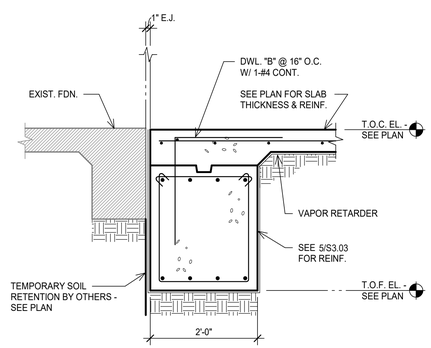

9 SECTION
SCALE: 3/4" = 1'-0"

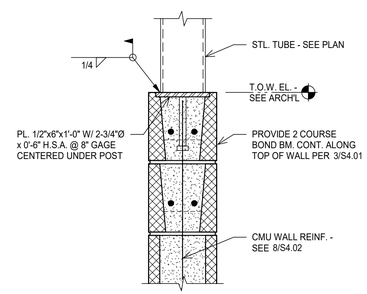

10 POST CONNECTION DETAIL
SCALE: 1 1/2" = 1'-0"

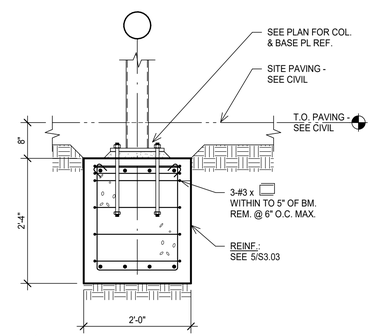

11 SECTION
SCALE: 3/4" = 1'-0"

Architects Design Group

Architects and Planners

I.S.K. Reeves V, F.A.I.A.
Ian A. Reeves, A.I.A.
Susan Gantt A.I.A., LEED-AP

333 N. Knowles Ave.
Winter Park, Florida 32789
(407) 647-1706

Corporate Registration Number: BR1177

FIRE STATION NO.5

CITY OF LONGVIEW

100% BID SET

The architect hereby expressly reserves his common law copyright and other property rights in these drawings. These drawings shall not be reproduced without written permission and consent of the architect, nor are they to be assigned to any party without first obtaining written permission and consent.

REVISIONS/ADDENDA

Number	Description	Date Issued

SHEET TITLE:

CONCRETE SECTIONS & DETAILS

scale: As indicated
drawn: JC
checked: MS
approved: BK
date: June 5th, 2020

PROJECT NUMBER:

1006

SHEET NUMBER:

S3.03

shaping the built environment
JQ ENGINEERING, LLP
100 GLASS STREET
214.752.9098
DALLAS, TEXAS 75207
JQENG.COM
PROJECT NO: 3190167
TBPE FIRM F-1294

STATE OF TEXAS
BARRY K. KRIEGER
100546
LICENSED
PROFESSIONAL ENGINEER

06/05/2020

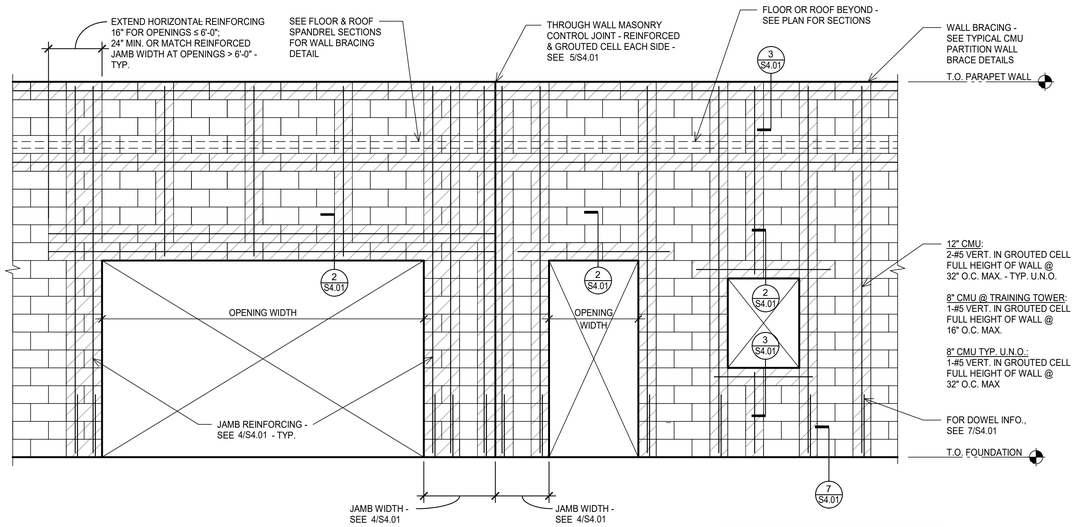

ELEVATION

NOTES:
1. SEE ARCH'L. DRAWINGS FOR LOCATION AND DIMENSIONS OF WALL OPENINGS.
2. FOR LAP SPLICE LENGTHS SEE 8/S4.01

1 TYPICAL EXTERIOR CMU WALL REINFORCING DETAIL
NO SCALE

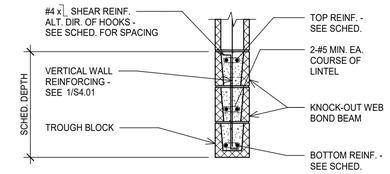

NOTES:
1. LINTELS SHALL REMAIN SHORED UNTIL MASONRY CONSTRUCTION ABOVE HAS CURED FOR A MINIMUM OF 14 DAYS.
2. SEE ARCHITECTURAL DRAWINGS FOR OPENING SIZE AND LOCATION.
3. EXTEND LINTELS PAST EDGES OF OPENINGS PER 1/S4.01
4. VERTICAL CONTROL JOINTS SHALL NOT CROSS LINTEL REINFORCING.

LINTEL REINFORCING SCHEDULE						
CLEAR SPAN	LOCATION	DEPTH	BOTTOM REINF.	TOP REINF.	TIE SPA.	JAMB DETAIL
≤ 6'-0"	INTERIOR	8"	2-#5	-	-	4/S4.01
≤ 12'-0"	INTERIOR	16"	2-#6	2-#6	8"	4/S4.01
≤ 3'-8"	EXTERIOR	8"	2-#5	-	-	4/S4.01
≤ 14'-0"	EXTERIOR	24"	2-#6	2-#6	8"	4/S4.01

2 TYPICAL CMU LINTEL DETAIL & REINFORCING SCHEDULE
NO SCALE

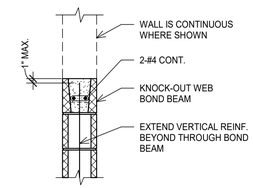

3 TYPICAL CMU BOND BEAM DETAIL
NO SCALE

NOTES
1. a.) FOR OPENING AT EXTERIOR WALL, EXTEND JAMB REINFORCING TO TOP OF WALL.
   b.) FOR OPENING AT INTERIOR WALL ≤ 6'-0", TERMINATE JAMB REINFORCING AT TOP OF LINTEL.
2. FOR TYPE 2 OPENINGS, LINTEL SHALL SPAN ACROSS BOTH OPENINGS. INTERMEDIATE CMU WALL BETWEEN OPENINGS SHALL BE EQUIVALENT OF COMBINED JAMB REINFORCING FROM EACH OPENING..
3. REFER TO 1/S4.02 FOR REINFORCING DETAIL AT JAMB CONDITIONS.

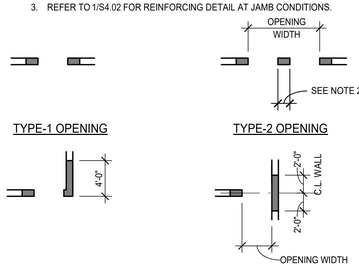

PLAN
NO SCALE

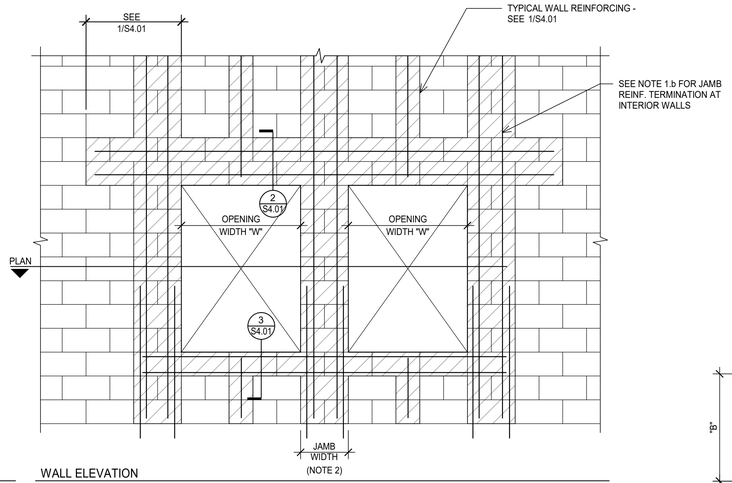

WALL ELEVATION
NO SCALE

JAMB WIDTH & REINFORCING SCHEDULE						
8" CMU				12" CMU		
WALL HEIGHT BETWEEN SUPPORTS *	CLEAR OPENING SIZE (W)			WALL HEIGHT BETWEEN SUPPORTS *	CLEAR OPENING SIZE (W)	
	< 4'-0"	<10'-0"	<20'-0"		< 4'-0"	<14'-0"
<12'-0"	8" / 1-#6	16" / 2-#6	32" / 4-#6	<28'-0"	8" / 2-#6	16" / 4-#6
<20'-0"	16" / 2-#6	24" / 3-#6	N/A	N/A	N/A	N/A

* SUPPORTS ARE DEFINED AS FLOORS, ROOFS, GIRTS, ETC. THAT ARE CONNECTED TO THE WALL WHICH BRACE THE WALL OUT OF PLANE.

4 CMU WALL JAMB REINFORCING DETAIL
NO SCALE

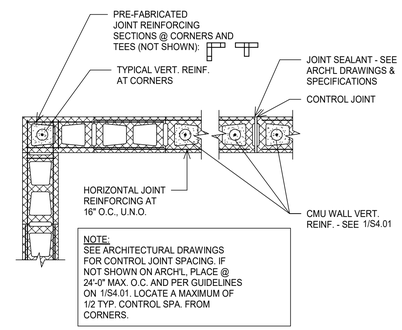

NOTE:
SEE ARCHITECTURAL DRAWINGS FOR CONTROL JOINT SPACING. IF NOT SHOWN ON ARCH'L, PLACE @ 24'-0" MAX. O.C. AND PER GUIDELINES ON 1/S4.01. LOCATE A MAXIMUM OF 1/2 TYP. CONTROL SPA. FROM CORNERS.

PLAN

5 TYPICAL CMU BAR PLACEMENT DETAIL
NO SCALE

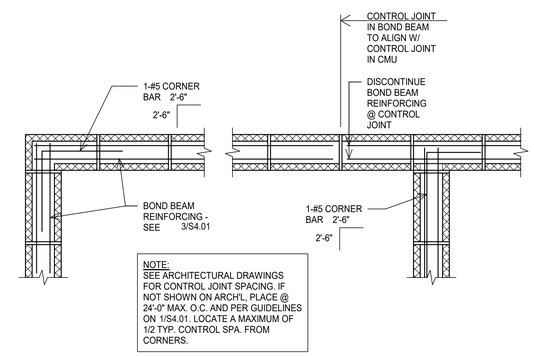

NOTE:
SEE ARCHITECTURAL DRAWINGS FOR CONTROL JOINT SPACING. IF NOT SHOWN ON ARCH'L, PLACE @ 24'-0" MAX. O.C. AND PER GUIDELINES ON 1/S4.01. LOCATE A MAXIMUM OF 1/2 TYP. CONTROL SPA. FROM CORNERS.

6 TYPICAL CORNER BARS AT BOND BEAMS DETAIL
NO SCALE

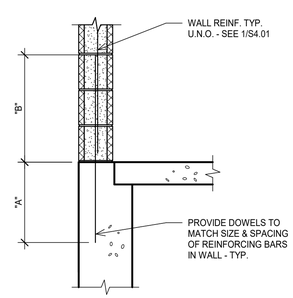

CAST-IN-PLACE (STRAIGHT BAR)

NOTES:
1. AT WALLS WITH DOUBLE REINFORCING, PROVIDE SINGLE DOWEL AT SIZE AND SPACING OF SCHEDULED WALL REINFORCING. CENTER DOWEL ON WALL, U.N.O.
2. MASONRY DOWELS SHALL BE TIED IN OR DRILLED AND ADHERED. MASONRY DOWELS SHALL NOT BE "STABBED" IN.
3. HOLES FOR MASONRY DOWELS MUST BE CLEANED WITH A WIRE BRUSH AND COMPRESSED AIR. FOLLOW MANUFACTURER'S INSTALLATION INSTRUCTIONS.

DOWEL SIZE	DIMENSIONS	
	"A"	"B"
#4	1'-6"	2'-6"
#5	1'-6"	3'-2"
#6	2'-0"	3'-9"
#7	2'-6"	4'-5"

7 TYPICAL MASONRY WALL DOWEL DETAIL
NO SCALE

CMU WALL LAP SPLICE SCHEDULE		
BAR SIZE	LAP LENGTH	
	BOND BEAMS	VERTICAL REINF.
#4	1'-8"	2'-6"
#5	2'-1"	3'-2"
#6	2'-6"	3'-9"
#7	2'-11"	4'-5"

NOTES:
1. SPLICES FOR VERTICAL REINF. SHALL BE STAGGERED IN ADJACENT CELLS SO THAT NO MORE THAN 1/2 OF ALL BARS ARE SPLICED AT THE SAME LOCATION.
2. DO NOT SPLICE BARS IN LINTELS.

8 CMU WALL LAP SPLICE SCHEDULE
NO SCALE

Architects Design Group

Architects and Planners
I.S.K. Reeves V, F.A.I.A.
Ian A. Reeves, A.I.A.
Susan Gantt A.I.A., LEED-AP

333 N. Knowles Ave.
Winter Park, Florida 32789
(407) 647-1706

Corporate Registration Number: BR1177

FIRE STATION NO.5

CITY OF LONGVIEW

100% BID SET

The architect hereby expressly reserves his common law copyright and other property rights in these drawings. These drawings shall not be reproduced without written permission and consent of the architect, nor are they to be assigned to any party without first obtaining written permission and consent.

REVISIONS/ADDENDA

Number	Description	Date Issued

SHEET TITLE:
TYPICAL MASONRY DETAILS

scale: As indicated
drawn: JC
checked: MS
approved: BK
date: June 5th, 2020

06/05/2020

PROJECT NUMBER:
1006

SHEET NUMBER:
S4.01

shaping the built environment
JQ ENGINEERING, LLP
100 GLASS STREET
214.752.9098
DALLAS, TEXAS 75207
JQENG.COM
PROJECT NO: 3190167
TBPE FIRM F-1294
STATE OF TEXAS
BARRY K. KRIEGER
100546
LICENSED PROFESSIONAL ENGINEER

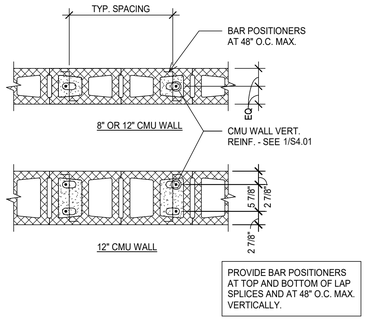

1 TYPICAL CMU BAR PLACEMENT DETAIL
NO SCALE

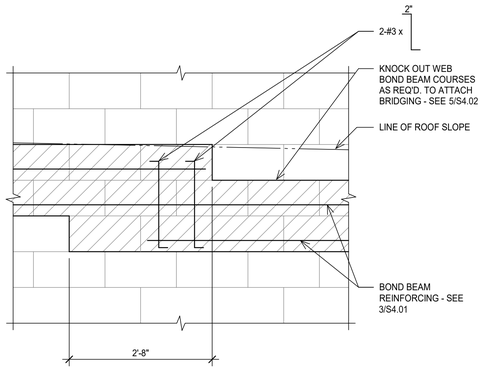

ELEVATION

2 TYPICAL STEP IN BOND BEAM DETAIL
NO SCALE

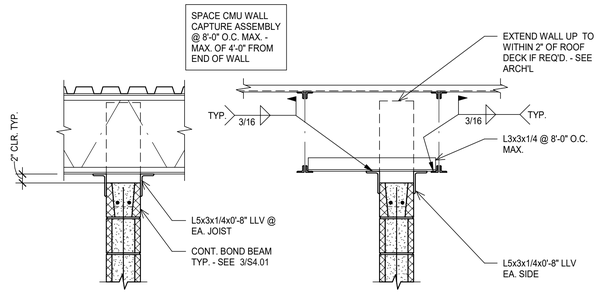

OPEN WEB JOISTS

3 TYPICAL CMU PARTITION WALL BRACE DETAIL - STEEL STRUCTURE
NO SCALE

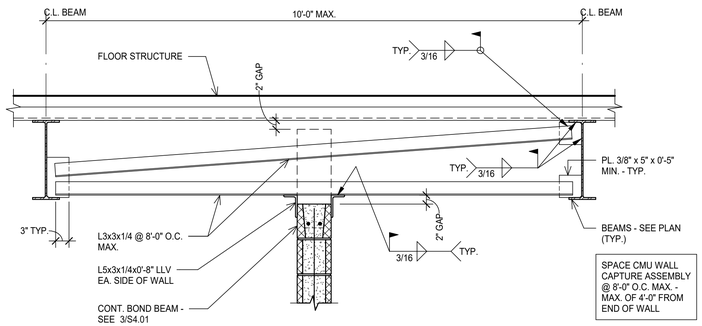

4 TYPICAL CMU PARTITION WALL BRACE DETAIL
NO SCALE

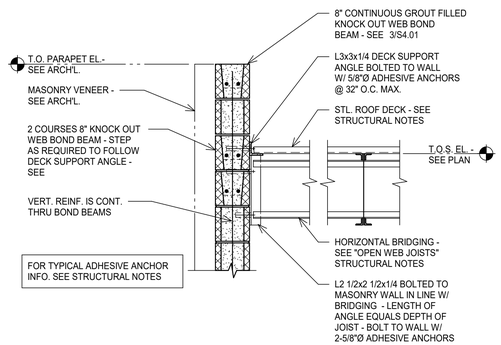

5 TYPICAL HORIZONTAL BRIDGING TO CMU DETAIL
NO SCALE

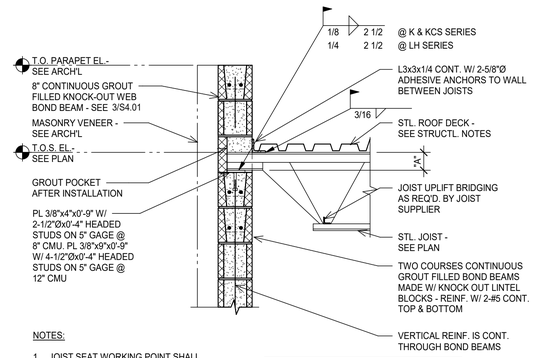

NOTES:

1. JOIST SEAT WORKING POINT SHALL BE AT THE CENTER OF WALL. - JOIST SEAT DEPTHS HAVE BEEN INCREASED TO ALLOW FOR THIS.
2. STEP BOND BEAM AS REQUIRED TO FOLLOW SLOPE OF ROOF. SEE 2/S4.02

JOIST SEAT BEARING DEPTH "A"		
JOIST SERIES	8" CMU	12" CMU
K & KCS	4"	7"
LH	5"	7"

6 TYPICAL JOIST BEARING ON EXTERIOR MASONRY WALL DETAIL
NO SCALE

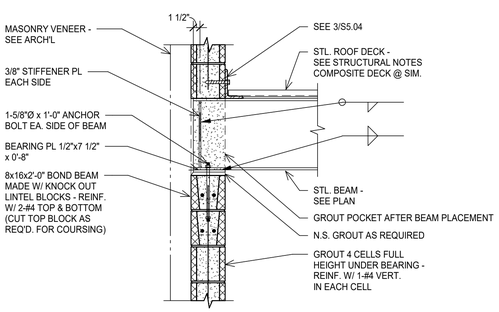

7 TYPICAL MASONRY WALL BEARING BEAM DETAIL
NO SCALE

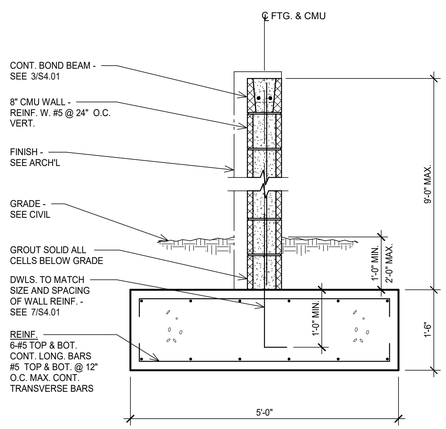

8 TYPICAL CMU SCREEN WALL DETAIL
NO SCALE

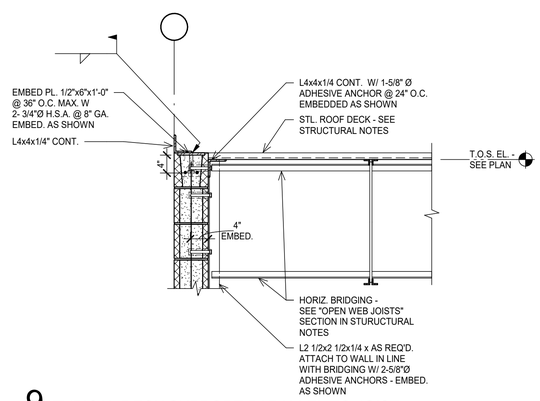

9 TYPICAL DECK SUPPORT PARALLEL TO JOIST
NO SCALE

Architects Design Group

Architects and Planners

I.S.K. Reeves V, F.A.I.A.
Ian A. Reeves, A.I.A.
Susan Gantt A.I.A., LEED-AP

333 N. Knowles Ave.
Winter Park, Florida 32789
(407) 647-1706

Corporate Registration Number: BR1177

FIRE STATION NO.5

CITY OF LONGVIEW

100% BID SET

The architect hereby expressly reserves his common law copyright and other property rights in these drawings. These drawings shall not be reproduced without written permission and consent of the architect, nor are they to be assigned to any party without first obtaining written permission and consent.

REVISIONS/ADDENDA

Number	Description	Date Issued

SHEET TITLE:

TYPICAL MASONRY DETAILS

scale: As indicated
drawn: JC
checked: MS
approved: BK
date: June 5th, 2020

PROJECT NUMBER:

1006

SHEET NUMBER:

S4.02

shaping the built environment

JQ ENGINEERING, LLP
100 GLASS STREET
214.752.9098
DALLAS, TEXAS 75207
JQENG.COM
PROJECT NO: 3190167
TBPE FIRM F-1294

STATE OF TEXAS
BARRY K. KRIEGER
100546
LICENSED PROFESSIONAL ENGINEER
06/05/2020

BASE PLATE & ANCHOR BOLT SCHEDULE									
MARK	BASE PLATE DIMENSIONS					DETAIL	ANCHOR BOLTS		
	V	W	Y	Z	T		NO./TYPE	DIA.	EMBED LENGTH
BP-1	12"	12"	4"	4"	3/4"	2/S5.01	4/AB-1	1"	1'-0"
BP-2	21"	16"	8 1/4"	4"	1 1/4"	4/S5.01	4/AB-2	1 1/4"	1'-6"
BP-3	11"	11"	3 1/2"	5 1/2"	3/4"	3/S5.01	4/AB-1	1"	1'-0"

1 BASE PLATE & ANCHOR BOLT SCHEDULE
NO SCALE

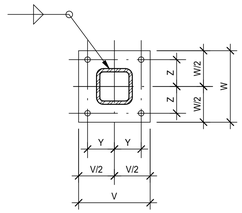

NOTES:

1. WELD TO BE 1/16" SMALLER THAN THICKNESS OF TUBE.
2. FOR BASE PLATE ELEVATION SEE DETAIL 5/S5.01

2 TYPICAL BASE PLATE DETAIL
NO SCALE

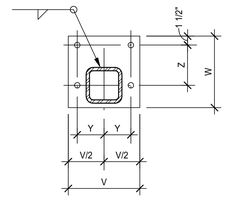

NOTES:

1. WELD TO BE 1/16" SMALLER THAN THICKNESS OF TUBE.
2. FOR BASE PLATE ELEVATION SEE DETAIL 5/S5.01

3 TYPICAL BASE PLATE DETAIL - EDGE COLUMN
NO SCALE

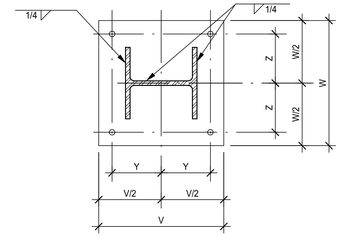

NOTES:

1. WELD TO BE MINIMUM SIZE REQUIRED BY A.I.S.C. FOR THICKNESS OF BASE PLATE USED.
2. FOR BASE PLATE ELEVATION SEE DETAIL 5/S5.01

4 TYPICAL BASE PLATE DETAIL
NO SCALE

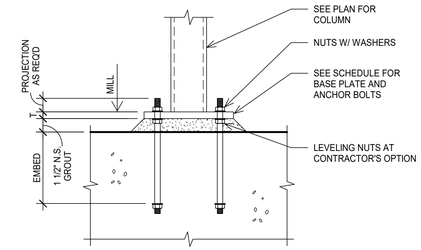

ELEVATION

5 TYPICAL COLUMN BASE PLATE DETAIL
NO SCALE

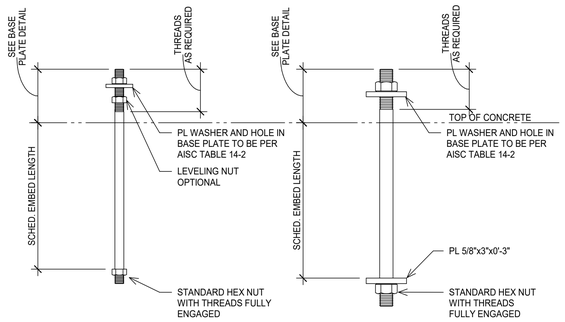

6 TYPICAL ANCHOR BOLT TYPES
NO SCALE

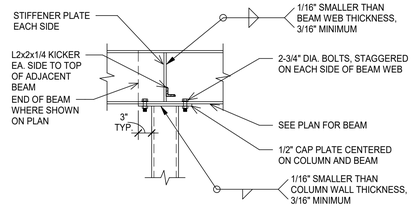

NOTES:

1. SEE ROOF PLAN FOR ROOF SLOPE. SLOPE CAP PLATES ACCORDINGLY.
2. STIFFENER PLATES SHALL BE EQUAL IN THICKNESS TO THE COLUMN WALL THICKNESS OR BEAM WEB THICKNESS, WHICHEVER IS GREATER.
3. CONNECT INTERSECTING BEAMS TO STIFFENER PLATES USING BOLTS IN SINGLE SHEAR DESIGNED FOR ECCENTRIC BEAM REACTION.

7 TYPICAL CAP PLATE - BOLTED CONNECTION DETAIL
NO SCALE

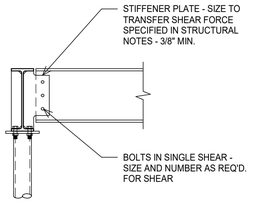

8 TYPICAL BOLTED SIMPLE BEAM TO GIRDER WEB CONNECTION AT COLUMN BRACING
NO SCALE

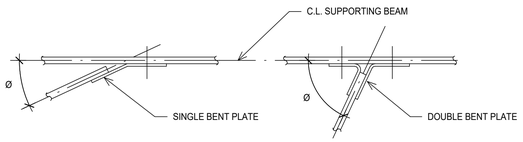

Ø < 60°

1. DESIGN CONNECTION FOR SINGLE SHEAR AND ECCENTRICITY.

60° < Ø

1. WHERE "Ø" > 85° USE BENT DOUBLE ANGLES IN LIEU OF BENT PLATES.

9 TYPICAL SKEWED SIMPLE FRAMING CONNECTIONS DETAIL
NO SCALE

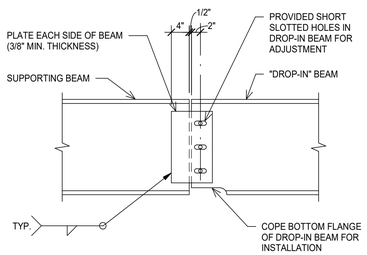

NOTES:

1. SPLICE CONNECTIONS SHALL BE DESIGNED BY THE CONTRACTOR TO MEET THE REQUIREMENTS SPECIFIED FOR STANDARD CONNECTIONS IN THE STRUCTURAL NOTES.
2. PROVIDE SHIM PLATES AS REQ'D & BETWEEN WEB AND SPLICE PLATES.

10 TYPICAL BOLTED BEAM SPLICE DETAIL
NO SCALE

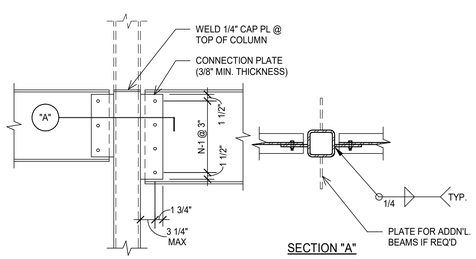

BEAM SIZE	PLATE LENGTH (L)	NO. OF BOLTS (N)	MAX BEAM REACTIONS (KIPS)	
			3/4" DIA	7/8" DIA
W8	6	2	21.2	25.6
W10	6	2	21.2	25.6
W12	9	3	31.8	38.4
W14	9	3	31.87	39.2
W16	12	4	42.4	52.2
W18	15	5	53	65.3
W21	18	6	63.6	78.3
W24	18	6	63.6	78.3
W27	21	7	74.2	91.3
W30	24	8	84.8	103.5
W33	27	9	95.4	115.6
W36	30	10	106	127.8
W40	33	11	116.6	139.9
W44	36	12	127.2	152.1

NOTES:

A. CONNECTIONS SHALL BE BASED ON REACTIONS SHOWN ON PLANS AND MAXIMUM BEAM REACTION IN ABOVE TABLE, U.N.O.

B. NOTED REACTIONS ARE FOR SERVICE LOADS.

C. SEE "STRUCTURAL STEEL CONNECTIONS" IN STRUCTURAL NOTES FOR ADDN'L. INFO.

D. MINIMUM CONNECTION: PLATE THICKNESS IS 3/8" TYPICAL AND 7/16" AT W33 AND DEEPER "HEAVY" CONNECTIONS.

E. BOLTS ARE A325N, TYPICAL.

F. BEAM CONNECTIONS ARE "STANDARD" U.N.O. ON PLAN.

11 TYPICAL BEAM WEB TO TUBE COLUMN CONNECTION
NO SCALE

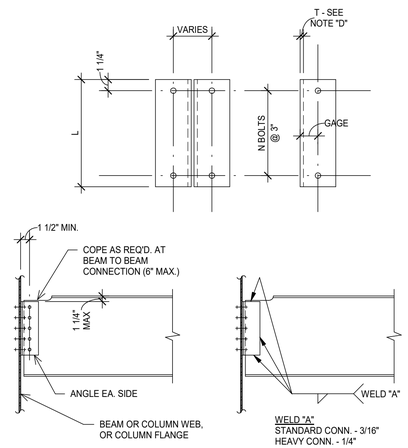

BEAM SIZE	STANDARD			HEAVY		
	ANGLE LENGTH (L)	NO. OF ROWS OF BOLTS (N)	MAX. BEAM REACTION (KIPS)	ANGLE LENGTH (L)	NO. OF ROWS OF BOLTS (N)	MAX. BEAM REACTION (KIPS)
W8	5 1/2"	2	17	-	-	N.A.
W10	5 1/2"	2	19	-	-	N.A.
W12	5 1/2"	2	20	8 1/2"	3	28
W14	8 1/2"	3	32	11 1/2"	4	42
W16	8 1/2"	3	35	11 1/2"	4	46
W18	11 1/2"	4	55	14 1/2"	5	68
W21	11 1/2"	4	64	17 1/2"	5	94
W24	14 1/2"	5	89	20 1/2"	7	123
W27	14 1/2"	5	89	23 1/2"	8	148
W30	17 1/2"	6	104	26 1/2"	9	167
W33	20 1/2"	7	119	29 1/2"	10	186
W36	23 1/2"	8	133	29 1/2"	10	186
W40	26 1/2"	9	147	29 1/2"	10	213
W44	29 1/2"	10	160	29 1/2"	10	213

NOTES:

A. RIGHT ANGLE CONNECTIONS SHALL BE DOUBLE ANGLE AS SCHEDULED. SKEWED CONNECTIONS SHALL BE BENT DOUBLE ANGLES OR BENT PLATES PER 9/S5.01

B. NOTED REACTIONS ARE FOR SERVICE LOADS.

C. REFER TO "STRUCTURAL STEEL CONNECTIONS" IN STRUCTURAL NOTES FOR ADDN'L. INFO.

D. MINIMUM CONNECTION: ANGLE THICKNESS IS 1/4" TYPICAL AND 5/16" AT W33 AND DEEPER "HEAVY" CONNECTIONS.

E. BOLTS ARE 3/4" DIA. TYP. AND 7/8" DIA. AT W40 & W44 "HEAVY CONNECTIONS". BOLTS ARE A325N.

F. BEAM CONNECTIONS ARE "STANDARD" U.N.O. ON PLAN.

G. CONTRACTOR SHALL CHECK DESIGN OF ALL BEAMS REQUIRING COPES GREATER THAN SHOWN IN DETAIL BASED ON REACTIONS SHOWN IN TABLE. CONNECTION ANGLES, BOLTS AND WELDS SHALL NOT BE LESS THAN THAT SHOWN.

12 AISC TYPE 2 SIMPLE FRAMING CONNECTIONS
NO SCALE

Architects Design Group

Architects and Planners

I.S.K. Reeves V, F.A.I.A.
Ian A. Reeves, A.I.A.
Susan Gantt A.I.A., LEED-AP

333 N. Knowles Ave.
Winter Park, Florida 32789
(407) 647-1706

Corporate Registration Number: BR1177

FIRE STATION NO.5

CITY OF LONGVIEW

100% BID SET

The architect hereby expressly reserves his common law copyright and other property rights in these drawings. These drawings shall not be reproduced without written permission and consent of the architect, nor are they to be assigned to any party without first obtaining written permission and consent.

REVISIONS/ADDENDA

Number	Description	Date Issued

SHEET TITLE:

TYPICAL STEEL DETAILS

scale: As indicated
drawn: JC
checked: MS
approved: BK
date: June 5th, 2020

PROJECT NUMBER:

1006

SHEET NUMBER:

S5.01

shaping the built environment

JQ ENGINEERING, LLP
100 GLASS STREET
214.752.9098
DALLAS, TEXAS 75207
JQENG.COM
PROJECT NO: 3190167
TBPE FIRM F-1294

STATE OF TEXAS
BARRY K. KRIEGER
100546
LICENSED
PROFESSIONAL ENGINEER
04/05/2020

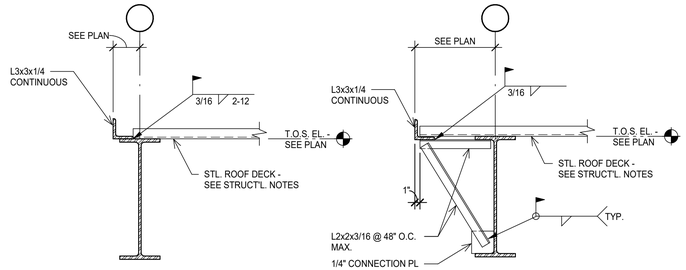

SECTION "A"

SECTION "B"

NOTES:

1. USE SECTION "B" WHEN MIN. OVERLAP OF ANGLE ON BEAM OF 1" CANNOT BE MAINTAINED.
2. FOR ATTACHMENT OF LIGHT GAUGE METAL STUDS TO ROOF EDGE ANGLE SEE 12/S5.02

1 TYPICAL EXTERIOR BEAM PARALLEL TO JOISTS DETAIL
NO SCALE

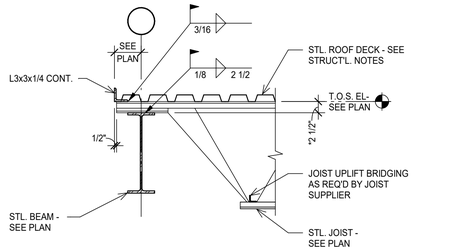

*JOIST MFR. TO VERIFY ROOF SLOPES & ADJUST SEAT DEPTH AS NECESSARY.

2 TYPICAL KCS OR K SERIES STEEL JOIST BEARING ON PERIMETER BEAM DETAIL
NO SCALE

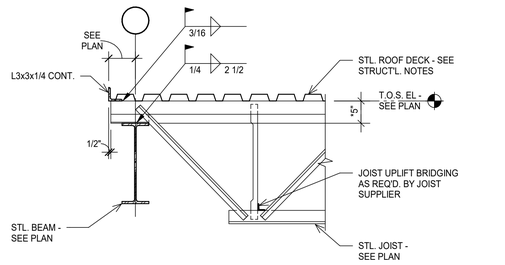

*JOIST MFR. TO VERIFY ROOF SLOPES & ADJUST SEAT DEPTH AS NECESSARY.

3 TYPICAL LH OR DLH SERIES STEEL JOIST BEARING ON PERIMETER BEAM DETAIL
NO SCALE

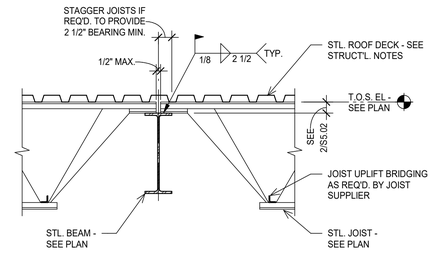

4 TYPICAL KCS OR K SERIES STEEL JOIST BEARING ON INTERIOR BEAM DETAIL
NO SCALE

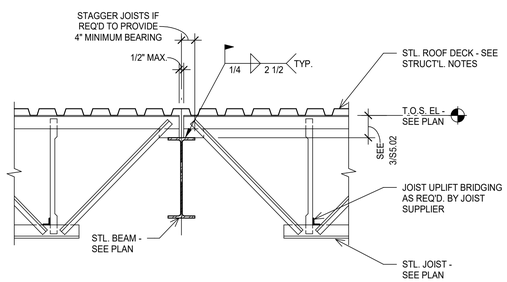

5 TYPICAL LH OR DLH SERIES STEEL JOIST BEARING ON STEEL BEAM DETAIL
NO SCALE

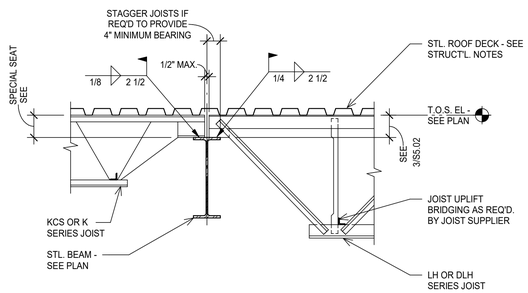

6 TYPICAL STEEL JOIST BEARING ON STEEL BEAM FOR KCS OR K SERIES BUTTING LH OR DLH SERIES DETAIL
NO SCALE

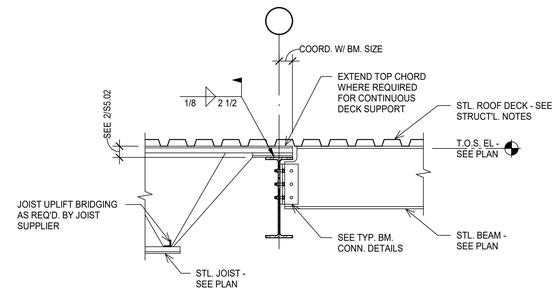

7 TYPICAL EXTENDED TOP CHORD FOR DECK SUPPORT DETAIL
NO SCALE

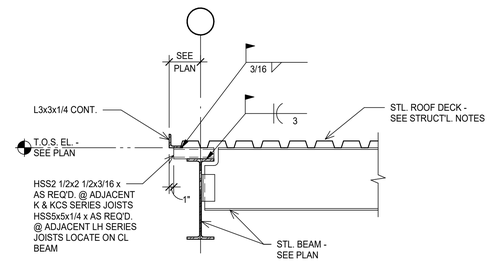

8 TYPICAL ROOF EDGE ANGLE
NO SCALE

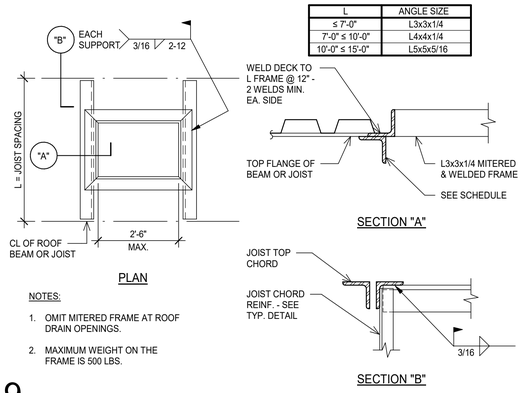

L	ANGLE SIZE
≤ 7'-0"	L3x3x1/4
7'-0" ≤ 10'-0"	L4x4x1/4
10'-0" ≤ 15'-0"	L5x5x5/16

PLAN

SECTION "A"

SECTION "B"

NOTES:

1. OMIT MITERED FRAME AT ROOF DRAIN OPENINGS.
2. MAXIMUM WEIGHT ON THE FRAME IS 500 LBS.

9 TYPICAL ROOF OPENING DETAIL
NO SCALE

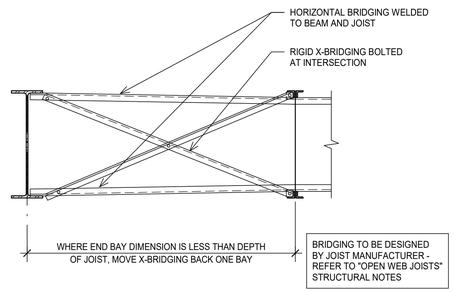

BRIDGING TO BE DESIGNED BY JOIST MANUFACTURER - REFER TO "OPEN WEB JOISTS" STRUCTURAL NOTES

10 TYPICAL CROSS-BRIDGING AT END BAY FOR K AND KCS SERIES JOISTS DETAIL
NO SCALE

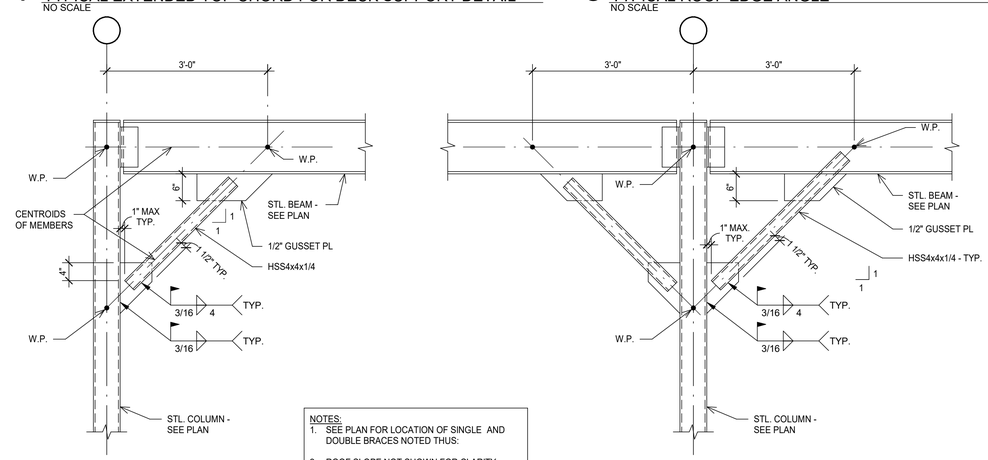

TYPICAL SINGLE BRACE DETAIL

NOTES:

1. SEE PLAN FOR LOCATION OF SINGLE AND DOUBLE BRACES NOTED THUS:
2. ROOF SLOPE NOT SHOWN FOR CLARITY. SLOPE BEAMS ACCORDINGLY.

TYPICAL DOUBLE BRACE DETAIL

11 TYPICAL KNEE BRACE DETAIL
NO SCALE

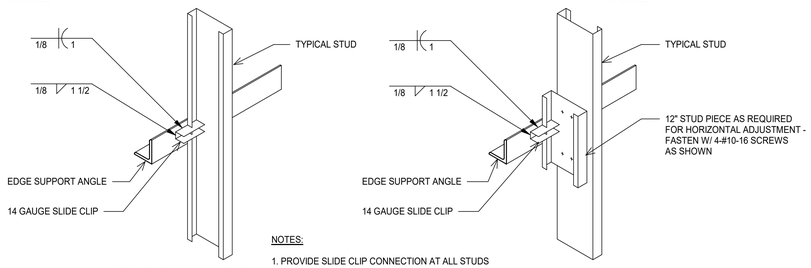

STANDARD CONNECTION

ALTERNATE CONNECTION

NOTE: USE THIS DETAIL AT ALL STUDS WHERE ROOF EDGE ANGLE AND STUDS DO NOT ALIGN

NOTES:

1. PROVIDE SLIDE CLIP CONNECTION AT ALL STUDS
2. AS ALTERNATE TO WELDING SLIDE CLIPS TO EDGE ANGLE, SLIDE CLIPS MAY BE FASTENED TO EDGE ANGLE USING 2-HILTI X-EDNI 16-P8 POWDER ACTUATED FASTENERS AT 2 1/2" O.C.

12 TYPICAL SLIDE CLIP DETAILS
NO SCALE

Architects Design Group

Architects and Planners

I.S.K. Reeves V, F.A.I.A.
Ian A. Reeves, A.I.A.
Susan Gantt A.I.A., LEED-AP

333 N. Knowles Ave.
Winter Park, Florida 32789
(407) 647-1706

Corporate Registration Number: BR1177

FIRE STATION NO.5

CITY OF LONGVIEW

100% BID SET

The architect hereby expressly reserves his common law copyright and other property rights in these drawings. These drawings shall not be reproduced without written permission and consent of the architect, nor are they to be assigned to any party without first obtaining written permission and consent.

REVISIONS/ADDENDA

Number	Description	Date Issued

SHEET TITLE:

TYPICAL STEEL DETAILS

scale: As indicated
drawn: JC
checked: MS
approved: BK
date: June 5th, 2020

PROJECT NUMBER:

1006

SHEET NUMBER:

S5.02

shaping the built environment

JQ ENGINEERING, LLP
100 GLASS STREET
214.752.9098
DALLAS, TEXAS 75207
JQENG.COM
PROJECT NO: 3190167
TBPE FIRM F-1294

STATE OF TEXAS
BARRY K. KRIEGER
100546
LICENSED PROFESSIONAL ENGINEER

06/05/2020

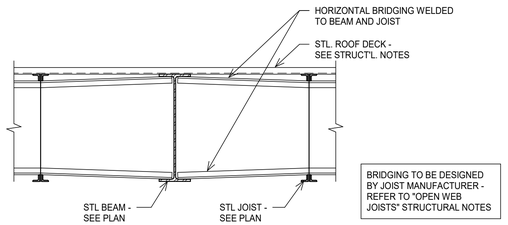

1 TYPICAL BEAM PARALLEL TO JOISTS DETAIL
NO SCALE

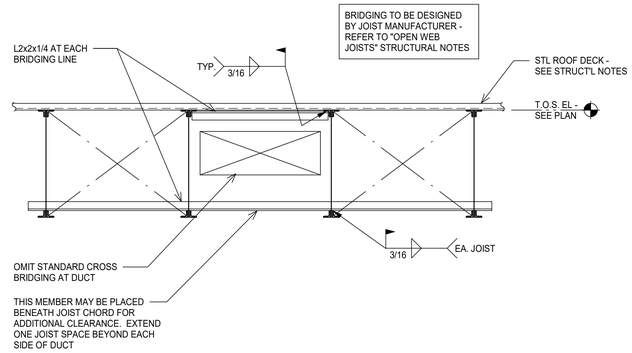

2 TYPICAL DUCT OPENING AT CROSS BRIDGING DETAIL
NO SCALE

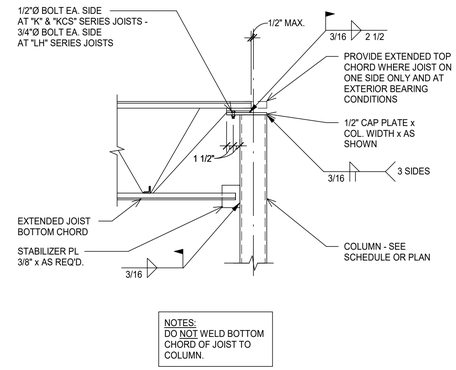

3 TYPICAL JOIST TO COLUMN CONNECTION WITH EXTENDED BOTTOM CHORD DETAIL
NO SCALE

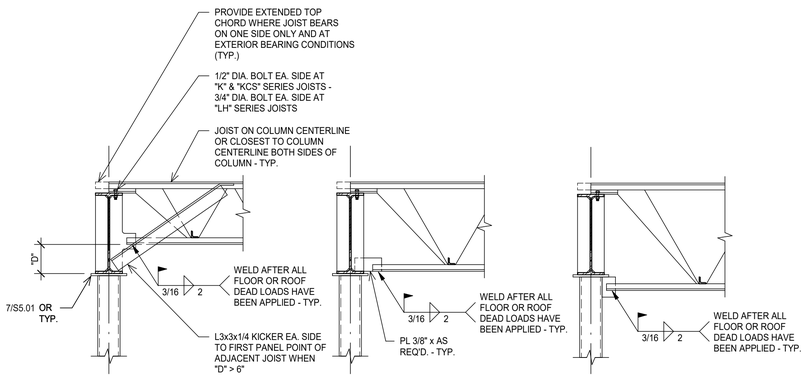

4 TYPICAL EXTENDED JOIST BOTTOM CHORD AT COLUMN CONDITION
NO SCALE

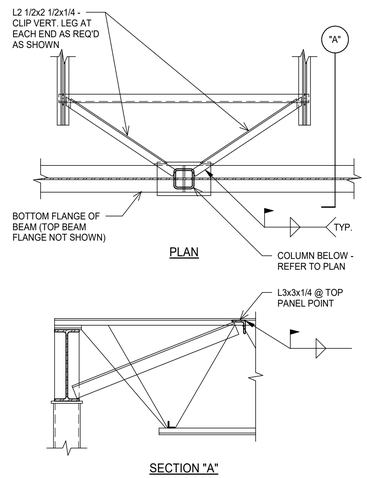

5 TYPICAL COLUMN BRACE DETAIL - JOISTS PERPENDICULAR TO BEAM
NO SCALE

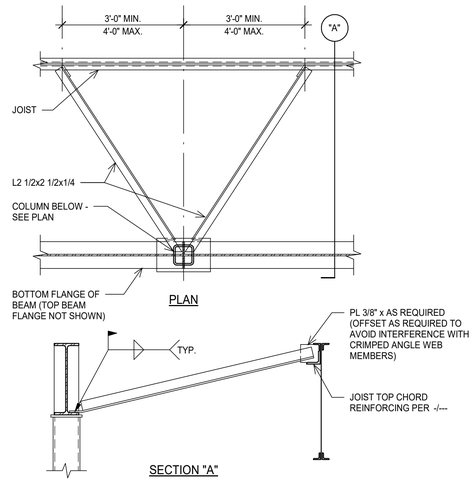

6 TYPICAL COLUMN BRACE DETAIL - JOISTS PARALLEL TO BEAM
NO SCALE

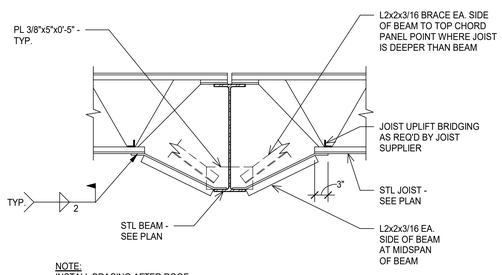

7 TYPICAL JOIST CONNECTION TO BOTTOM FLANGE OF BEAM DETAIL
NO SCALE

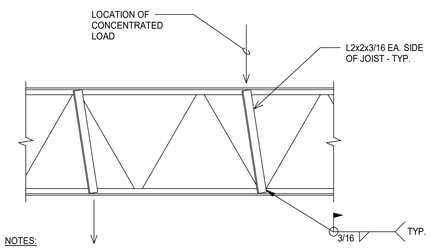

NOTES:

1. THIS DETAIL APPLIES WHEREVER A CONCENTRATED LOAD GREATER THAN 100 POUNDS OCCURS MORE THAN 4" AWAY FROM A JOIST TOP OR BOTTOM CHORD PANEL POINT. MAXIMUM LOAD TO BE APPLIED WITHOUT CONSULTATION WITH ENGINEER IS 250 POUNDS. DO NOT PLACE CONCENTRATED LOADS CLOSER THAN 4'-0" O.C.
2. ALL HANGERS OR ATTACHMENTS TO JOISTS SHALL BE PLACED CONCENTRIC WITH THE TOP AND BOTTOM CHORD(S) AND SHALL NOT ATTACH TO ONLY ONE ANGLE OF CHORD.

8 TYPICAL JOIST CHORD REINFORCEMENT DETAIL
NO SCALE

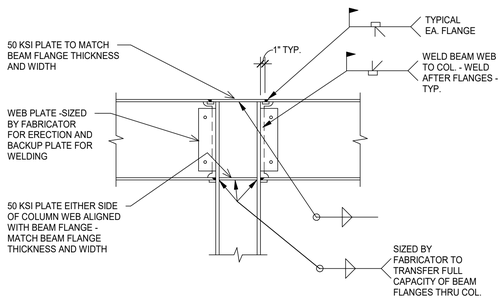

9 TYPICAL BEAM TO TOP OF COLUMN MOMENT CONNECTION DETAIL
NO SCALE

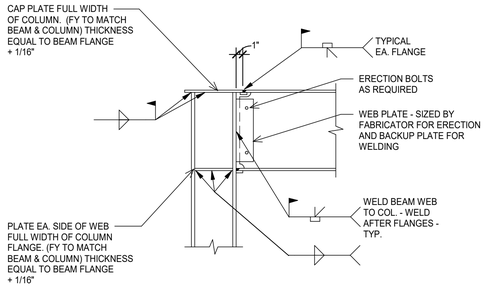

10 TYPICAL MOMENT CONNECTION DETAIL
NO SCALE

Architects Design Group

Architects and Planners

I.S.K. Reeves V, F.A.I.A.
Ian A. Reeves, A.I.A.
Susan Gantt A.I.A., LEED-AP

333 N. Knowles Ave.
Winter Park, Florida 32789
(407) 647-1706

Corporate Registration Number: BR1177

FIRE STATION NO.5

CITY OF LONGVIEW

100% BID SET

The architect hereby expressly reserves his common law copyright and other property rights in these drawings. These drawings shall not be reproduced without written permission and consent of the architect, nor are they to be assigned to any party without first obtaining written permission and consent.

REVISIONS/ADDENDA

Number	Description	Date Issued

SHEET TITLE:

TYPICAL STEEL DETAILS

scale: As indicated
drawn: JC
checked: MS
approved: BK
date: June 5th, 2020

PROJECT NUMBER:

1006

SHEET NUMBER:

S5.03

shaping the built environment

JQ ENGINEERING, LLP
100 GLASS STREET
214.752.9008
DALLAS, TEXAS 75207
JQENG.COM
PROJECT NO: 3190167
TBPE FIRM F-1294

STATE OF TEXAS
BARRY K. KRIEGER
100546
LICENSED
PROFESSIONAL ENGINEER
06/05/2020

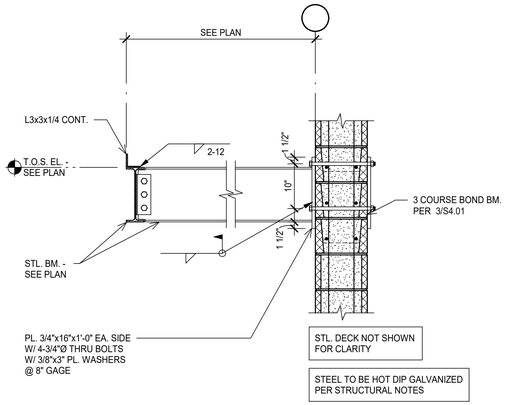

1 TYPICAL CANOPY SUPPORT DETAIL
SCALE: 3/4" = 1'-0"

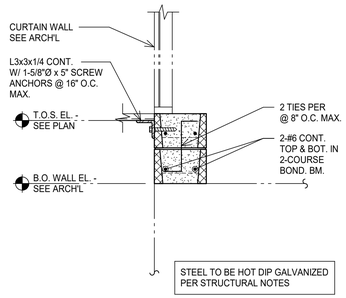

2 TYPICAL CANOPY SECTION
SCALE: 3/4" = 1'-0"

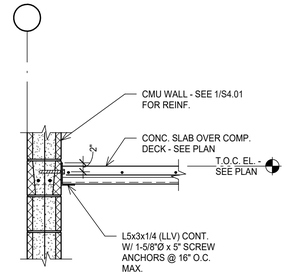

3 SECTION
SCALE: 3/4" = 1'-0"

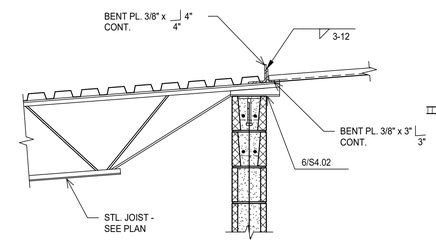

4 DECK TRANSITION SECTION
SCALE: 3/4" = 1'-0"

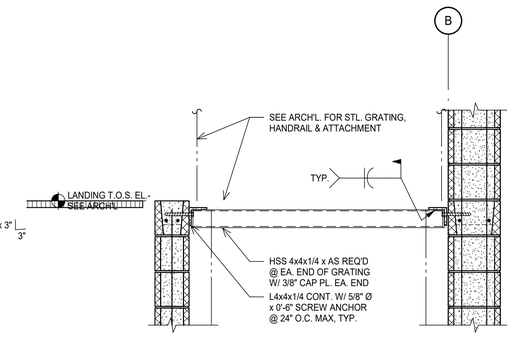

5 LANDING SUPPORT DETAIL
SCALE: 3/4" = 1'-0"

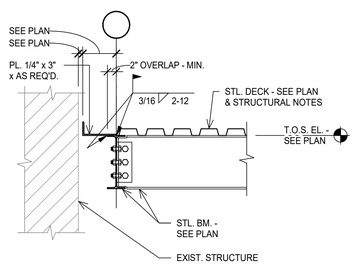

6 CANOPY SECTION
SCALE: 3/4" = 1'-0"

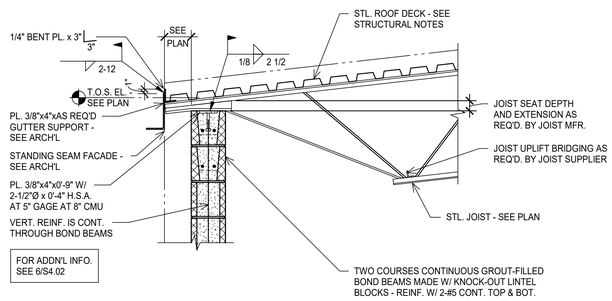

NOTES:

1. JOIST SEAT WORKING POINT SHALL BE AT THE CENTER OF WALL. JOIST SEAT DEPTHS HAVE BEEN INCREASED TO ALLOW FOR THIS.
2. STEP BOND BEAM AS REQUIRED TO FOLLOW SLOPE OF ROOF. SEE 2/S4.02

7 TYPICAL STANDING SEAM TURNDOWN DETAIL
SCALE: 3/4" = 1'-0"

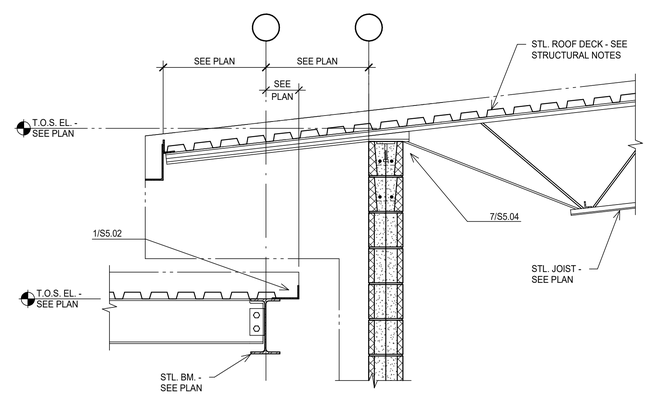

8 TURNDOWN SECTION
SCALE: 3/4" = 1'-0"

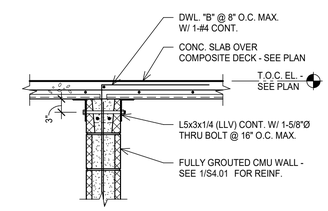

9 SECTION
SCALE: 3/4" = 1'-0"

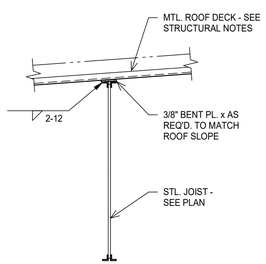

10 SECTION
SCALE: 3/4" = 1'-0"

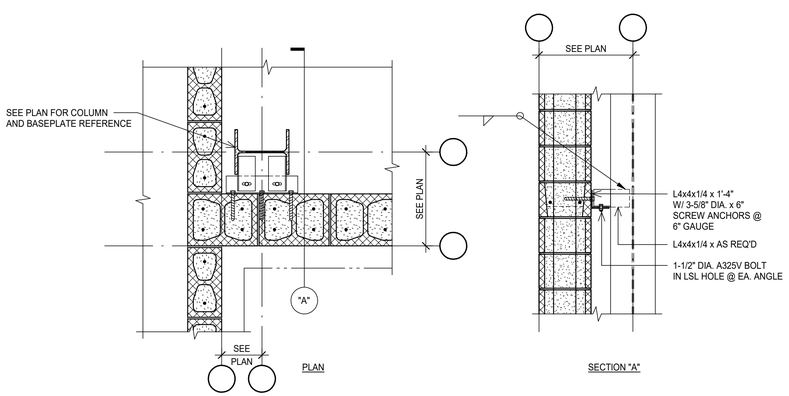

11 COULMN BRACING DETAIL
SCALE: 3/4" = 1'-0"

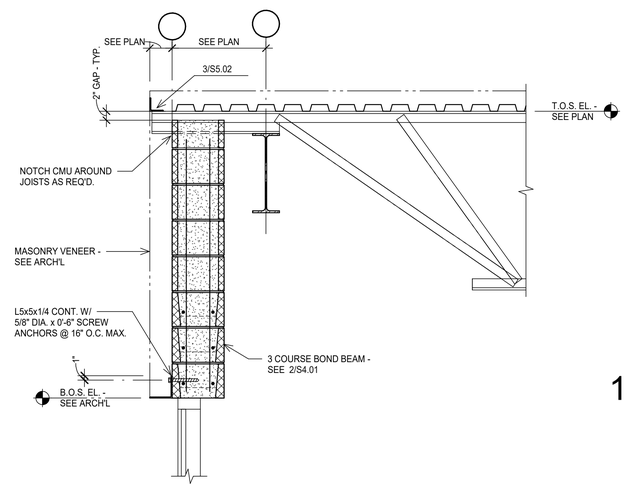

12 SECTION AT APPARATUS BAY
SCALE: 3/4" = 1'-0"

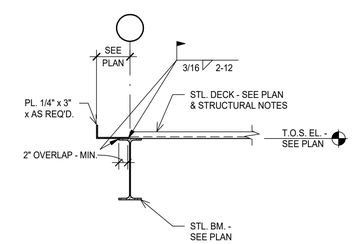

13 SECTION
SCALE: 3/4" = 1'-0"

Architects Design Group

Architects and Planners

I.S.K. Reeves V, F.A.I.A.
Ian A. Reeves, A.I.A.
Susan Gantt A.I.A., LEED-AP

333 N. Knowles Ave.
Winter Park, Florida 32789
(407) 647-1706

Corporate Registration Number: BR1177

FIRE STATION NO.5

CITY OF LONGVIEW

100% BID SET

The architect hereby expressly reserves his common law copyright and other property rights in these drawings. These drawings shall not be reproduced without written permission and consent of the architect, nor are they to be assigned to any party without first obtaining written permission and consent.

REVISIONS/ADDENDA

Number	Description	Date Issued

SHEET TITLE:

STEEL SECTIONS & DETAILS

scale:	As indicated
drawn:	JC
checked:	MS
approved:	BK
date:	June 5th, 2020

PROJECT NUMBER:

1006

SHEET NUMBER:

S5.04

shaping the built environment

JQ ENGINEERING, LLP
300 GLASS STREET
214.752.9098
DALLAS, TEXAS 75207
JQENG.COM
PROJECT NO: 3190167
TBPE FIRM F-1294

STATE OF TEXAS
BARRY K. KRIEGER
100546
LICENSED PROFESSIONAL ENGINEER

04/05/2020

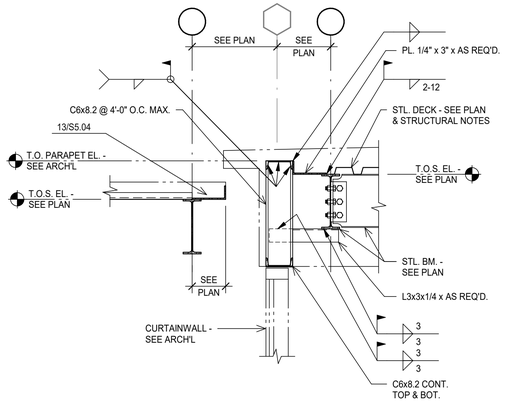

1 SECTION
SCALE: 3/4" = 1'-0"

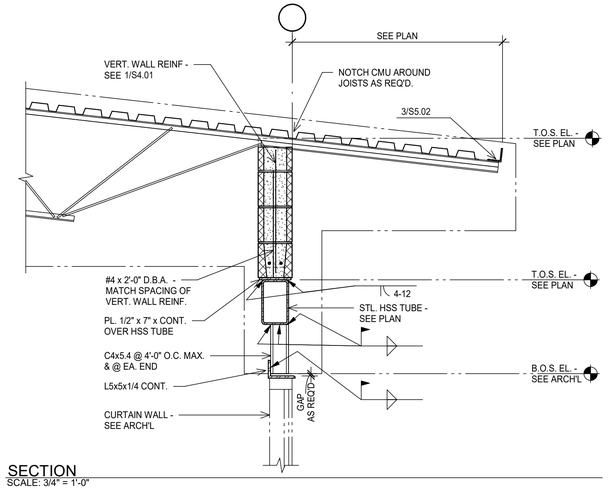

2 SECTION
SCALE: 3/4" = 1'-0"

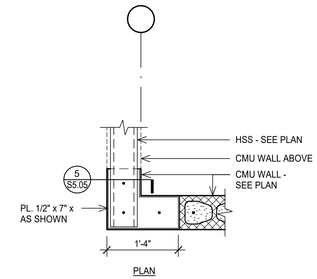

3 HSS CONNECTION TO CMU WALL DETAIL
SCALE: 3/4" = 1'-0"

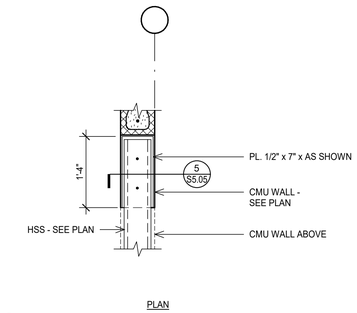

4 HSS CONNECTION TO CMU WALL DETAIL
SCALE: 3/4" = 1'-0"

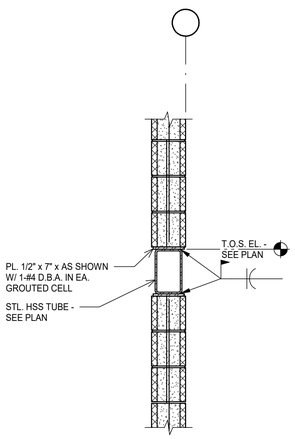

5 SECTION
SCALE: 3/4" = 1'-0"

Architects Design Group

Architects and Planners

I.S.K. Reeves V, F.A.I.A.
Ian A. Reeves, A.I.A.
Susan Gantt A.I.A., LEED-AP

333 N. Knowles Ave.
Winter Park, Florida 32789
(407) 647-1706

Corporate Registration Number: BR1177

FIRE STATION NO.5

CITY OF LONGVIEW

100% BID SET

The architect hereby expressly reserves his common law copyright and other property rights in these drawings. These drawings shall not be reproduced without written permission and consent of the architect, nor are they to be assigned to any party without first obtaining written permission and consent.

REVISIONS/ADDENDA

Number	Description	Date Issued

KEY PLAN

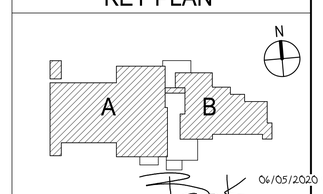

shaping the built environment

JQ ENGINEERING, LLP
100 GLASS STREET
214 752 9098
DALLAS, TEXAS 75207
JQENG.COM
PROJECT NO: 3190167
TBPE FIRM F-1294

STATE OF TEXAS
BARRY K. KRIEGER
100546
LICENSED
PROFESSIONAL ENGINEER

06/05/2020

SHEET TITLE:

STEEL SECTIONS AND DETAILS

scale:	As indicated
drawn:	JC
checked:	MS
approved:	BK
date:	June 5th, 2020

PROJECT NUMBER:

1006

SHEET NUMBER:

S5.05

DEDUCT ALTERNATE #2: KEEP EXISTING APPARATUS BAY DOORS FOR THE EXISTING APPARATUS ROOM. (BOTH SIDES).
BASE BID : PROVIDE NEW SECTIONAL DOORS AS SHOWN IN THE DOOR SCHEDULE AND SPECIFICATIONS AND BID SET.

DEDUCT ALTERNATE #4: KEEP EXISTING CEILING AND LIGHT FIXTURES FOR THE EXISTING APPARATUS BAY ROOM.
BASE BID : REMOVE EXISTING SUSPENDED CEILING TILES AND GRID, CLEAN AND PAINT EXISTING STRUCTURE AND PROVIDE NEW LIGHT FIXTURE AS SHOWN IN THE BID SET.

DEDUCT ALTERNATE #5: KEEP EXISTING BRICK AND EXTERIOR SURFACES AS IS.
BASE BID: EXTERIOR BRICK TO BE PAINTED.

GENERAL DEMOLITION NOTES

1. PRIOR TO DEMOLITION, SALVAGE ANY EQUIPMENT, FURNISHING, ETC. AND STORE AS DIRECTED BY OWNER .

2. NOTIFY THE ARCHITECT OF ANY DISCREPENCIES BETWEEN THE FLOOR PLAN AND EXISTING CONDITIONS.

3. REMOVE ALL EXISITNG PLUMBING FIXTURES AND RESTROOM ACCESSORIES, CAP EXISTING PLUMBING LINES, CLEAN AND PREP FOR RENOVATION.

4. REMOVE ALL EXISTING FINISHES FROM WALLS TO REMAIN. CLEAN, SAND AND PREP WALLS TO RECEIVE NEW FINISH.

DEMO KEY NOTES - FLOOR PLAN

KEY	DESCRIPTION
1	REMOVE SLIDING DOOR IN ITS ENTIRETY
2	REMOVE EXISTING FLOOR FINISH. PREP SLAB FOR NEW FINISH
3	REMOVE EXISTING DOOR
4	REMOVE EXISTING WALL IN ENTIRETY. CAP AND RELOCATE ANY ELECTRICAL OR PLUMING AS REQUIRED.
5	REMOVE EXISTING WINDOW

DEMOLITION LEGEND

	ITEMS TO BE REMOVED
	WALL TO REMAIN
	DOOR TO BE REMOVED
	DOOR TO REMAIN
	COLUMN EXISTING TO REMAIN

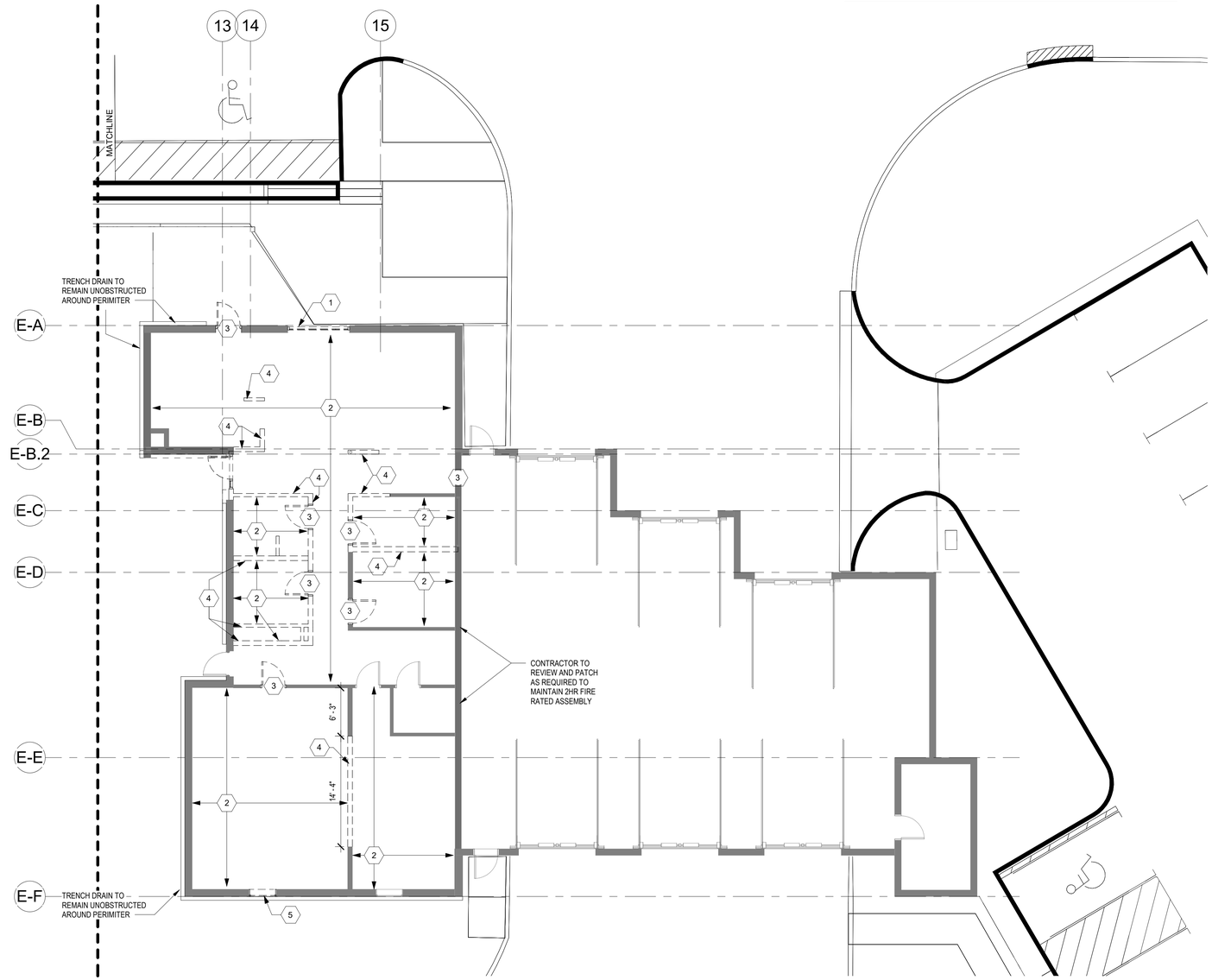

1 FLOOR PLAN - DEMOLITION
1/8" = 1'-0"

KEY PLAN

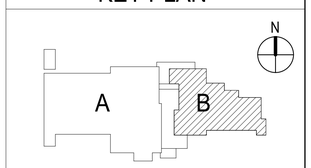

Architects Design Group

Architects and Planners
I.S.K. Reeves V, F.A.I.A.
Ian A. Reeves, A.I.A.
Susan Gantt A.I.A., LEED-AP

333 N. Knowles Ave.
Winter Park, Florida 32789
(407) 647-1706

Corporate Registration Number: BR1177

REGISTERED ARCHITECT IAN A. REEVES 22797 STATE OF TEXAS
06.05.2020

FIRE STATION NO.5

CITY OF LONGVIEW

100% BID SET

The architect hereby expressly reserves his common law copyright and other property rights in these drawings. These drawings shall not be reproduced without written permission and consent of the architect, nor are they to be assigned to any party without first obtaining written permission and consent.

REVISIONS/ADDENDA

Number	Description	Date Issued

SHEET TITLE:
FLOOR PLAN - DEMOLITION

scale: As indicated
drawn: ADG DALLAS
checked: SB/MBV
approved: IAR
date: June 5, 2020
PROJECT NUMBER:
1006
SHEET NUMBER:
AX-101

DEDUCT ALTERNATE #4: KEEP EXISTING CEILING AND LIGHT FIXTURES FOR THE EXISTING APPARATUS BAY ROOM.
BASE BID : REMOVE EXISTING SUSPENDED CEILING TILES AND GRID, CLEAN AND PAINT EXISTING STRUCTURE AND PROVIDE NEW LIGHT FIXTURE AS SHOWN IN THE BID SET.

DEDUCT ALTERNATE #5: KEEP EXISTING BRICK AND EXTERIOR SURFACES AS IS.
BASE BID: EXTERIOR BRICK TO BE PAINTED.

DEMO KEY NOTES - RCP

KEY	DESCRIPTION
1	REMOVE ALL EXISTING ACOUSTICAL TILE AND GRID AS INDICATED IN PLAN
2	REMOVE ALL EXISTING LIGHT FIXTURES. CAP AND RELOCATE ANY ELECTRICAL AS REQUIRED
3	REMOVE ALL MECHANICAL SUPPLY VENTS AND DUCTWORK PER MECHANICAL DRAWINGS
4	EXISTING ACT TILE AND LIGHTS TO BE REMAIN.

1 REFLECTED CEILING PLAN - DEMOLITION
1/8" = 1'-0"

KEY PLAN

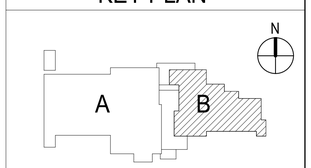

Architects Design Group

Architects and Planners
I.S.K. Reeves V, F.A.I.A.
Ian A. Reeves, A.I.A.
Susan Gantt A.I.A., LEED-AP

333 N. Knowles Ave.
Winter Park, Florida 32789
(407) 647-1706

Corporate Registration
Number: BR1177

REGISTERED ARCHITECT IAN A. REEVES 12797 STATE OF TEXAS
06.05.2020

FIRE STATION NO.5

CITY OF LONGVIEW

100% BID SET

The architect hereby expressly reserves his common law copyright and other property rights in these drawings. These drawings shall not be reproduced without written permission and consent of the architect, nor are they to be assigned to any party without first obtaining written permission and consent.

REVISIONS/ADDENDA

Number	Description	Date Issued

SHEET TITLE:

REFLECTED CEILING PLAN - DEMOLITION

scale: As indicated
drawn: ADH DALLAS
checked: SB/MBV
approved: IAR
date: June 5, 2020
PROJECT NUMBER:
1006
SHEET NUMBER:
AX-111

SCHEDULE OF ALTERNATES

1. **DEDUCT ALTERNATE #1:** PROVIDE CHAIN LINK FENCE AND GATES FOR THE SECURE PARKING.
   BASE BID : PROVIDE MASONRY AND ALUMINUM METAL SCREEN AND METAL CANTILEVER GATES AS SHOWN ON THE BID SET
2. **DEDUCT ALTERNATE #2:** KEEP EXISTING APPARATUS BAY DOORS FOR THE EXISTING APPARATUS ROOM. (BOTH SIDES).
   BASE BID : PROVIDE NEW SECTIONAL DOORS AS SHOWN IN THE DOOR SCHEDULE AND SPECIFICATIONS AND BID SET.
3. **DEDUCT ALTERNATE #3:** PROVIDE SECTIONAL DOORS FOR THE NEW APPARATUS BAY EGRESS SIDE TO MATCH SECTIONAL DOORS SHOWN FOR THE INGRESS OF THE NEW APPARATUS BAY.
   BASE BID : PROVIDE BI-FOLD DOORS PER SPECIFICATIONS AND DOOR SCHEDULE FOR THE EGRESS SIDE OF THE NEW APPARATUS BAY ROOM.
4. **DEDUCT ALTERNATE #4:** KEEP EXISTING CEILING AND LIGHT FIXTURES FOR THE EXISTING APPARATUS BAY ROOM.
   BASE BID : REMOVE EXISTING SUSPENDED CEILING TILES AND GRID, CLEAN AND PAINT EXISTING STRUCTURE AND PROVIDE NEW LIGHT FIXTURE AS SHOWN IN THE BID SET.
5. **DEDUCT ALTERNATE #5:** KEEP EXISTING BRICK AND EXTERIOR SURFACES AS IS.
   BASE BID : EXTERIOR BRICK TO BE PAINTED.

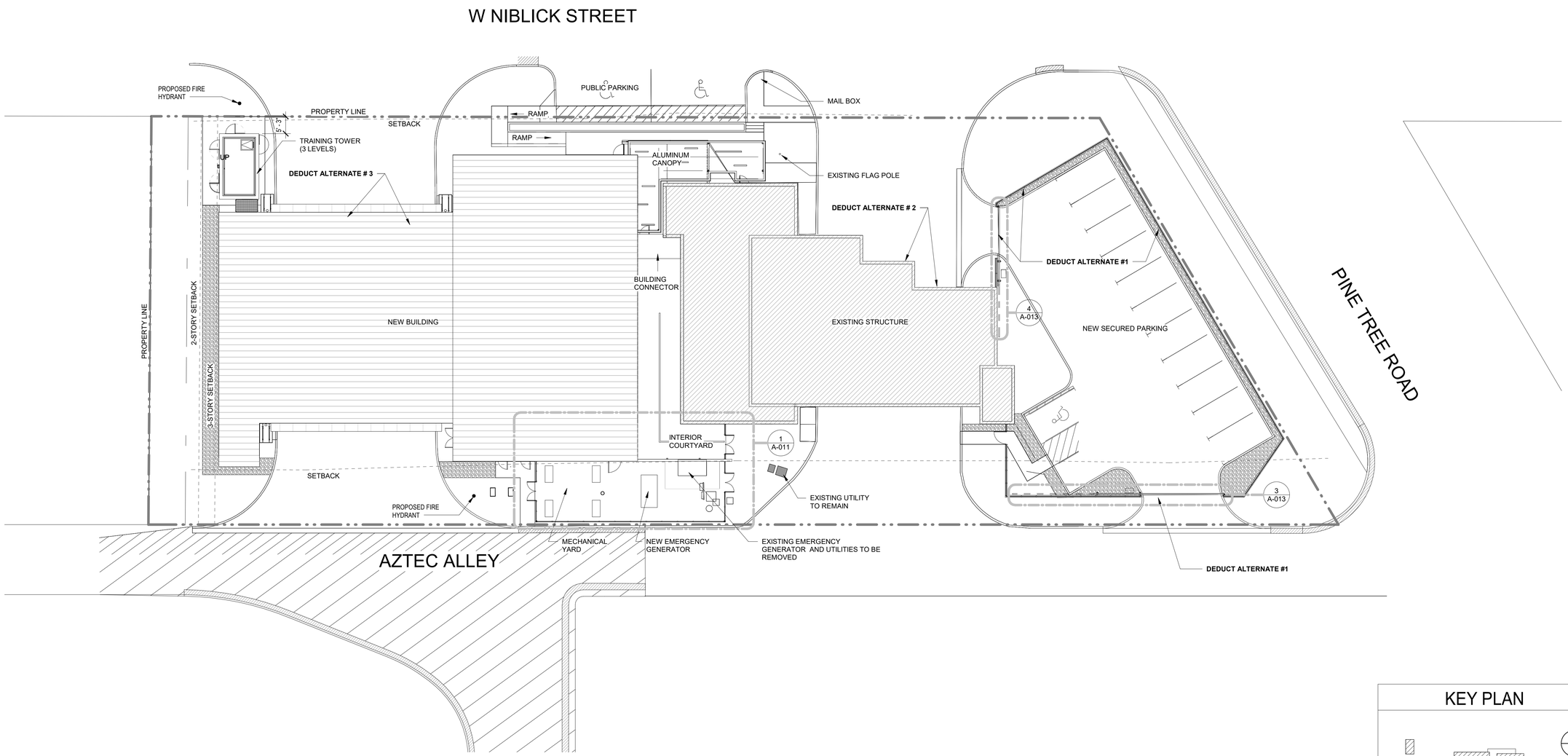

1 SITE PLAN
1/16" = 1'-0"

KEY PLAN

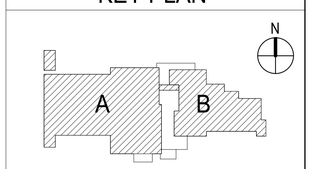

Architects Design Group

Architects and Planners

I.S.K. Reeves V, F.A.I.A.
Ian A. Reeves, A.I.A.
Susan Gantt A.I.A., LEED-AP

333 N. Knowles Ave.
Winter Park, Florida 32789
(407) 647-1706

Corporate Registration Number: BR1177

REGISTERED ARCHITECT IAN A. REEVES 22797 STATE OF TEXAS
06.05.2020

FIRE STATION NO.5

CITY OF LONGVIEW

100% BID SET

The architect hereby expressly reserves his common law copyright and other property rights in these drawings. These drawings shall not be reproduced without written permission and consent of the architect, nor are they to be assigned to any party without first obtaining written permission and consent.

REVISIONS/ADDENDA

Number	Description	Date Issued

SHEET TITLE:

ARCHITECTURAL SITE PLAN - FOR REFERENCE ONLY

scale: As indicated
drawn: ADG DALLAS
checked: SB/MBV
approved: IAR
date: June 5, 2020

PROJECT NUMBER:

1006

SHEET NUMBER:

A-001

SCHEDULE OF ALTERNATES

1. **DEDUCT ALTERNATE #1:** PROVIDE CHAIN LINK FENCE AND GATES FOR THE SECURE PARKING.
   BASE BID : PROVIDE MASONRY AND ALUMINUM METAL SCREEN AND METAL CANTILEVER GATES AS SHOWN ON THE BID SET
2. **DEDUCT ALTERNATE #2:** KEEP EXISTING APPARATUS BAY DOORS FOR THE EXISTING APPARATUS ROOM. (BOTH SIDES).
   BASE BID : PROVIDE NEW SECTIONAL DOORS AS SHOWN IN THE DOOR SCHEDULE AND SPECIFICATIONS AND BID SET.
3. **DEDUCT ALTERNATE #3:** PROVIDE SECTIONAL DOORS FOR THE NEW APPARATUS BAY EGRESS SIDE TO MATCH SECTIONAL DOORS SHOWN FOR THE INGRESS OF THE NEW APPARATUS BAY.
   BASE BID : PROVIDE BI-FOLD DOORS PER SPECIFICATIONS AND DOOR SCHEDULE FOR THE EGRESS SIDE OF THE NEW APPARATUS BAY ROOM.
4. **DEDUCT ALTERNATE #4:** KEEP EXISTING CEILING AND LIGHT FIXTURES FOR THE EXISTING APPARATUS BAY ROOM.
   BASE BID : REMOVE EXISTING SUSPENDED CEILING TILES AND GRID, CLEAN AND PAINT EXISTING STRUCTURE AND PROVIDE NEW LIGHT FIXTURE AS SHOWN IN THE BID SET.
5. **DEDUCT ALTERNATE #5:** KEEP EXISTING BRICK AND EXTERIOR SURFACES AS IS.
   BASE BID : EXTERIOR BRICK TO BE PAINTED.

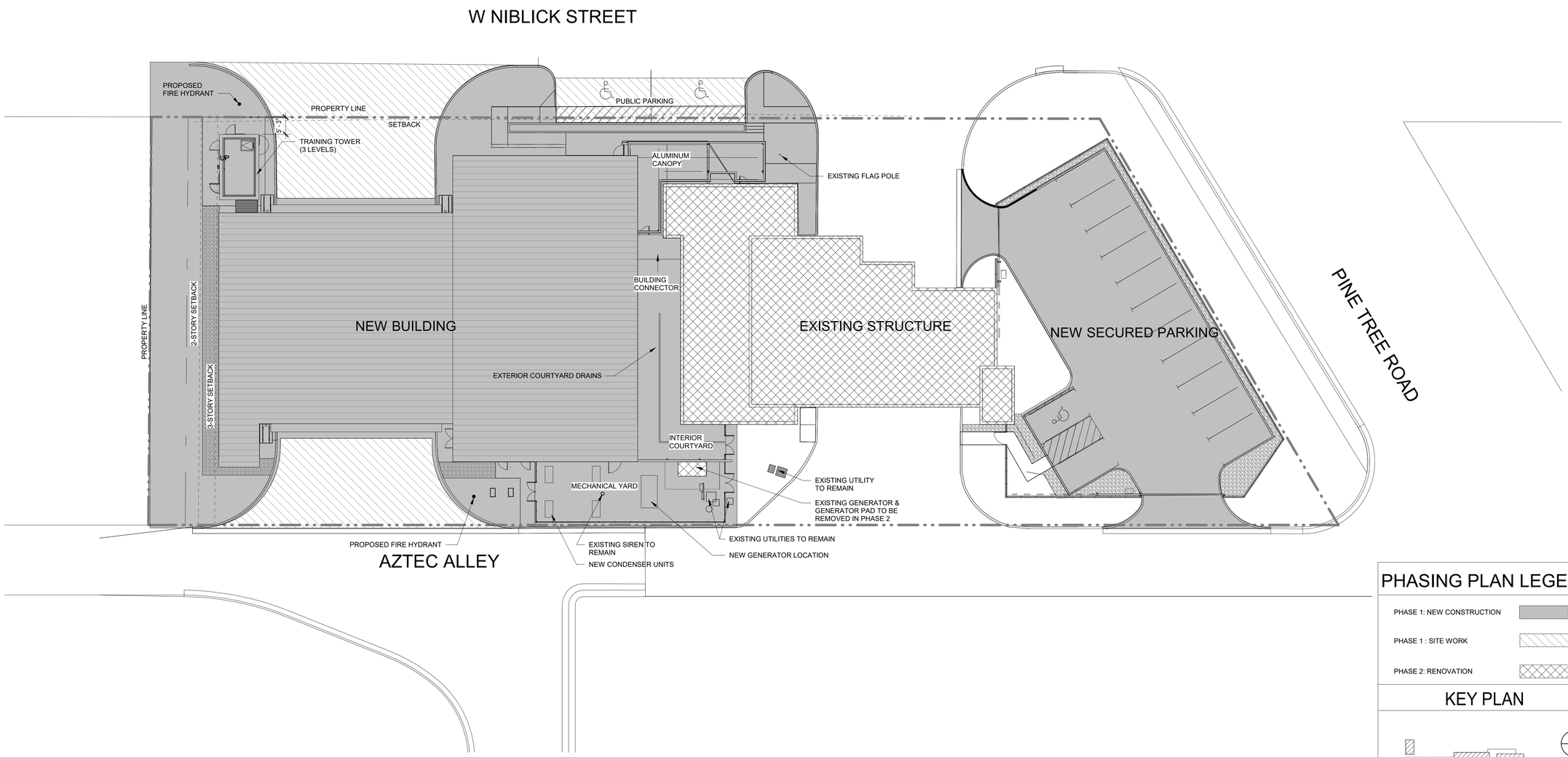

1 PHASING PLAN
1/16" = 1'-0"

PHASING PLAN LEGEND

PHASE 1: NEW CONSTRUCTION

PHASE 1 : SITE WORK

PHASE 2: RENOVATION

KEY PLAN

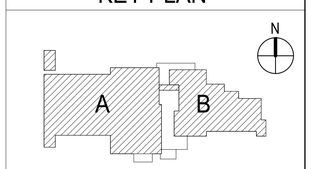

Architects Design Group

Architects and Planners

I.S.K. Reeves V, F.A.I.A.
Ian A. Reeves, A.I.A.
Susan Gantt A.I.A., LEED-AP

333 N. Knowles Ave.
Winter Park, Florida 32789
(407) 647-1706

Corporate Registration Number: BR1177

REGISTERED ARCHITECT IAN A. REEVES 22797 STATE OF TEXAS
06.05.2020

FIRE STATION NO.5

CITY OF LONGVIEW

100% BID SET

The architect hereby expressly reserves his common law copyright and other property rights in these drawings. These drawings shall not be reproduced without written permission and consent of the architect, nor are they to be assigned to any party without first obtaining written permission and consent.

REVISIONS/ADDENDA

Number	Description	Date Issued

SHEET TITLE:
PHASING PLAN

scale: As indicated
drawn: ADG DALLAS
checked: SB/MBV
approved: IAR
date: June 5, 2020

PROJECT NUMBER:
1006

SHEET NUMBER:
A-002

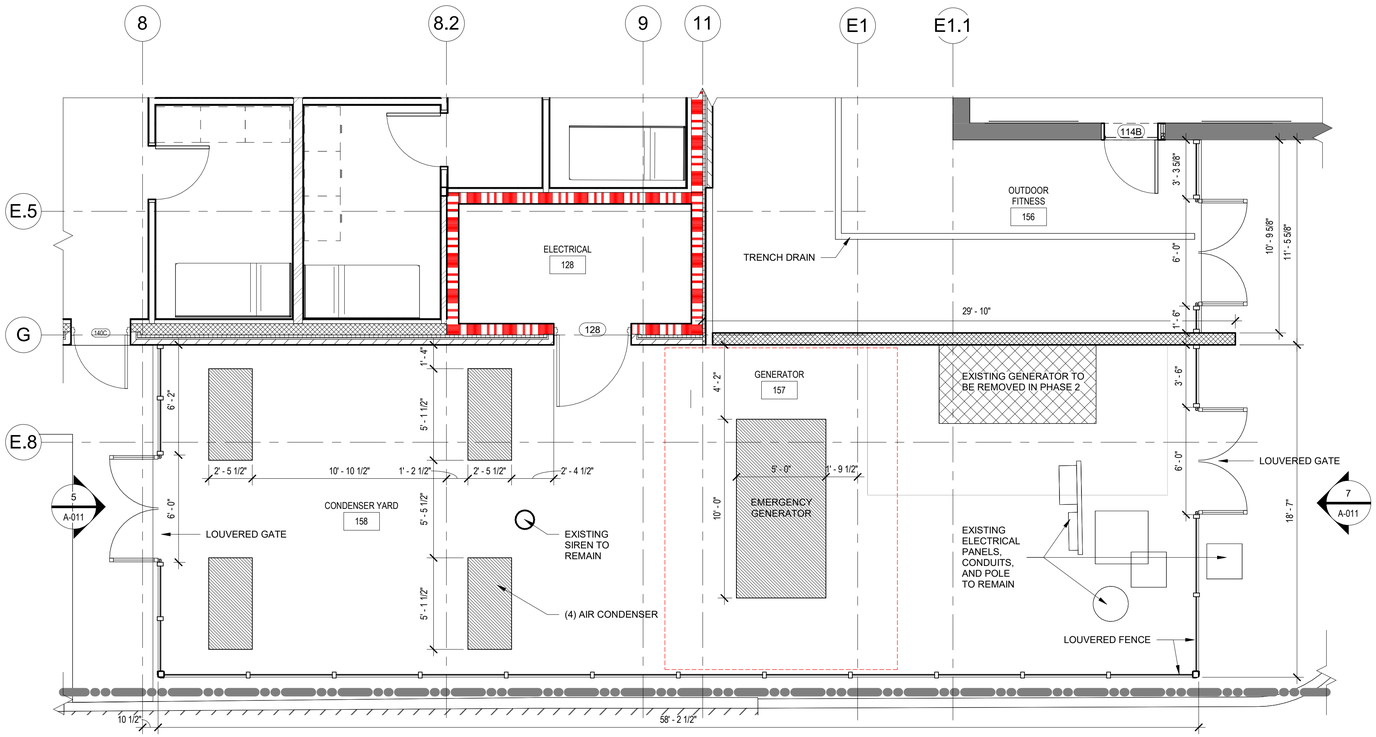

GENERATOR ENCLOSURE / OUTDOOR FITNESS YARD - SITE PLAN

1 1/4" = 1'-0"

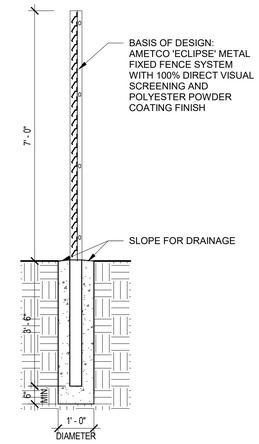

GENERATOR ENCLOSURE SECTION

3 1/2" = 1'-0"

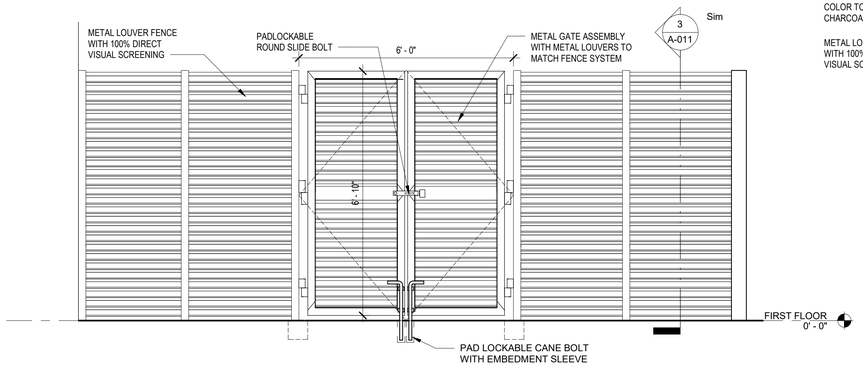

GENERATOR ENCLOSURE - WEST ELEVATION

5 1/2" = 1'-0"

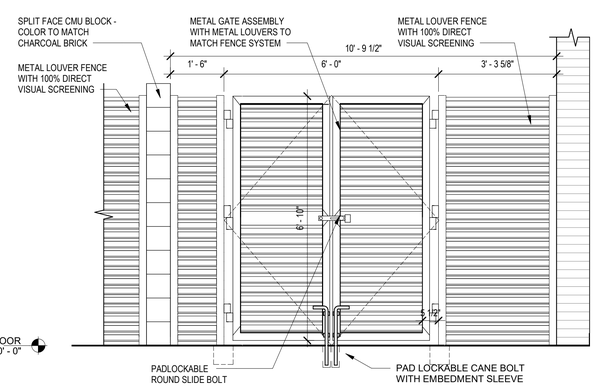

INTERIOR COURTYARD - EAST ELEVATION

6 1/2" = 1'-0"

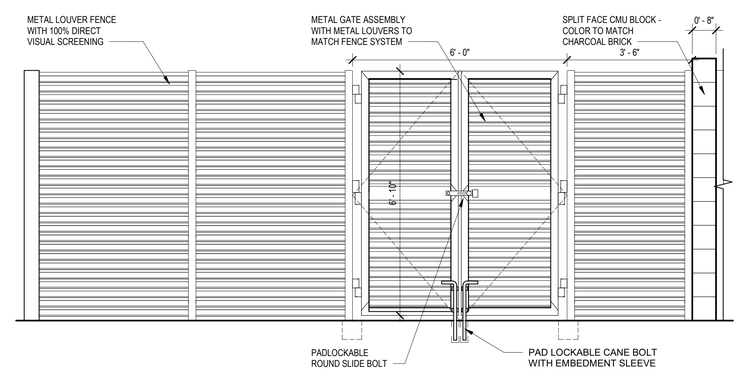

GENERATOR ENCLOSURE - EAST ELEVATION

7 1/2" = 1'-0"

Architects Design Group

Architects and Planners

I.S.K. Reeves V, F.A.I.A.
Ian A. Reeves, A.I.A.
Susan Gantt A.I.A., LEED-AP

333 N. Knowles Ave.
Winter Park, Florida 32789
(407) 647-1706

Corporate Registration
Number: BR1177

REGISTERED ARCHITECT
IAN A. REEVES
22797
STATE OF TEXAS
06.05.2020

FIRE STATION NO.5

CITY OF LONGVIEW

100% BID SET

The architect hereby expressly reserves his common law copyright and other property rights in these drawings. These drawings shall not be reproduced without written permission and consent of the architect, nor are they to be assigned to any party without first obtaining written permission and consent.

REVISIONS/ADDENDA

Number	Description	Date Issued

SHEET TITLE:

GENERATOR ENCLOSURE DETAILS

scale: As indicated
drawn: ADG DALLAS
checked: SB/MBV
approved: IAR
date: June 5, 2020

PROJECT NUMBER:

1006

SHEET NUMBER:

A-011

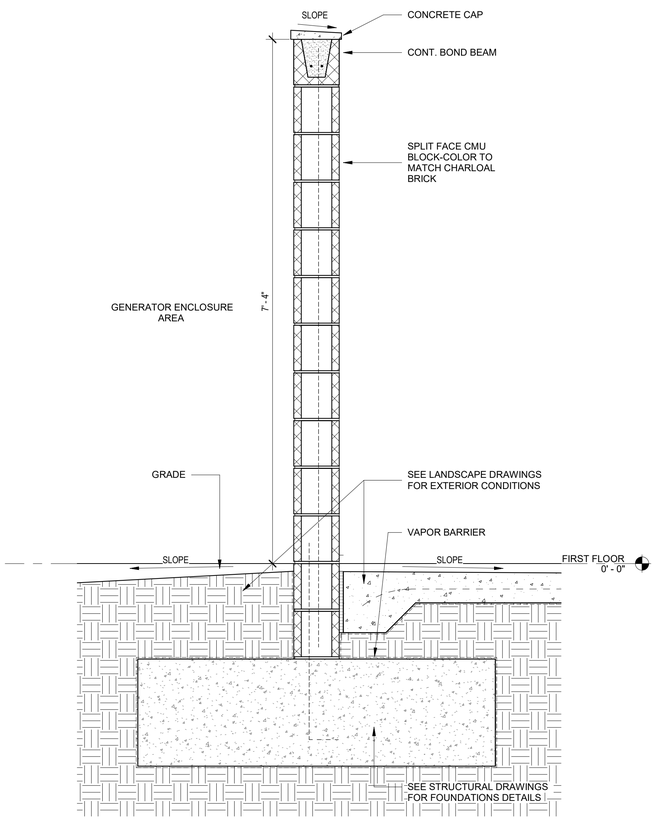

LOW WALL SECTION GENERATOR / OUTDOOR FITNESS

1 — 1" = 1'-0"

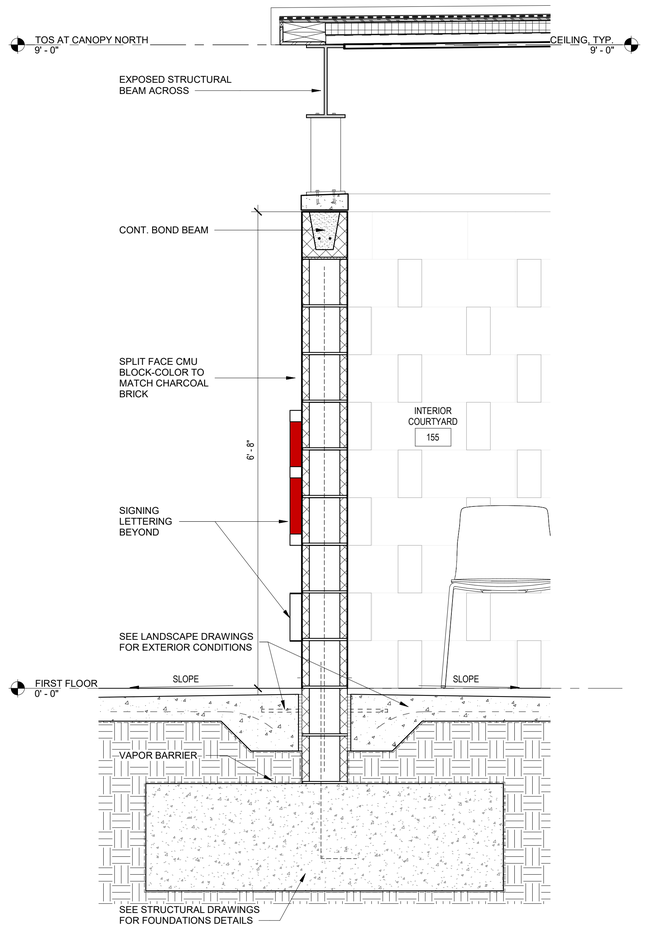

LOW WALL SECTION INTERIOR COURTYARD / EXTERIOR

2 — 1" = 1'-0"

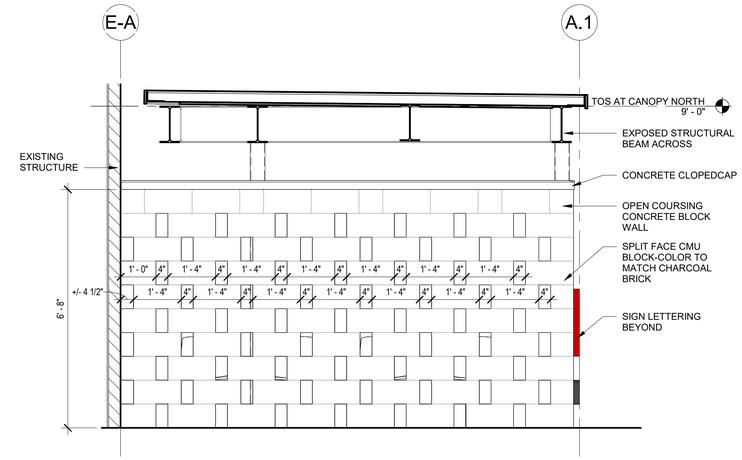

INTERIOR COURTYARD - WALL ELEVATION

4 — 1/2" = 1'-0"

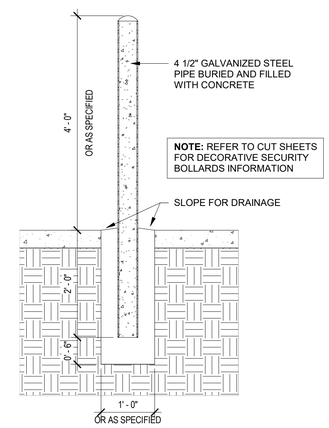

BOLLARD SECTION

3 — 3/4" = 1'-0"

Architects Design Group

Architects and Planners

I.S.K. Reeves V, F.A.I.A.
Ian A. Reeves, A.I.A.
Susan Gantt A.I.A., LEED-AP

333 N. Knowles Ave.
Winter Park, Florida 32789
(407) 647-1706

Corporate Registration Number: BR1177

REGISTERED ARCHITECT — IAN A. REEVES — 22797 — STATE OF TEXAS

06.05.2020

FIRE STATION NO.5

CITY OF LONGVIEW

100% BID SET

The architect hereby expressly reserves his common law copyright and other property rights in these drawings. These drawings shall not be reproduced without written permission and consent of the architect, nor are they to be assigned to any party without first obtaining written permission and consent.

REVISIONS/ADDENDA

Number	Description	Date Issued

SHEET TITLE:

ENLARGED SITE PLAN DETAILS

scale: As indicated
drawn: ADG DALLAS
checked: SB/MBV
approved: IAR
date: June 5, 2020

PROJECT NUMBER:

1006

SHEET NUMBER:

A-012

DEDUCT ALTERNATE #1: PROVIDE CHAIN LINK FENCE AND GATES FOR THE SECURE PARKING.
BASE BID : PROVIDE MASONRY AND ALUMINUM METAL SCREEN AND METAL CANTILEVER GATES AS SHOWN ON THE BID SET

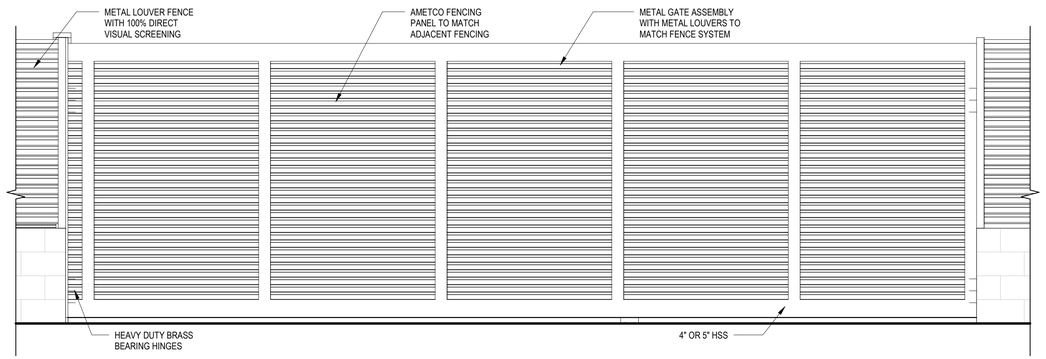

1 SECURE PARKING - SOUTH GATE ELEVATION
1/2" = 1'-0"

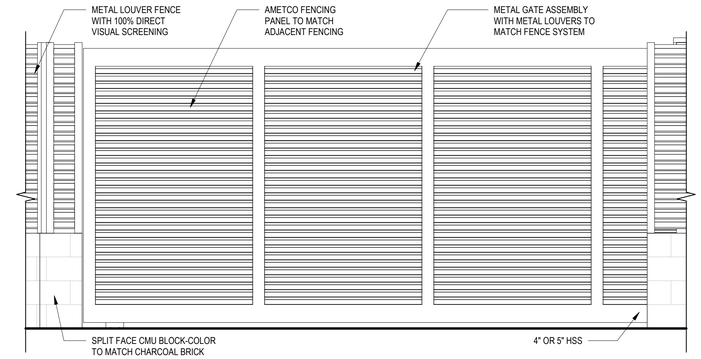

2 SECURE PARKING - WEST GATE ELEVATION
1/2" = 1'-0"

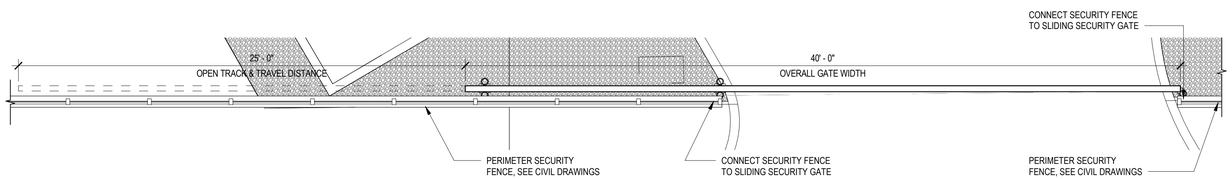

3 SECURE PARKING - SOUTH GATE PLAN
1/4" = 1'-0"

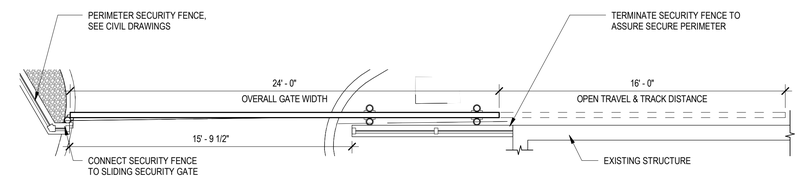

4 SECURE PARKING - WEST GATE PLAN
1/4" = 1'-0"

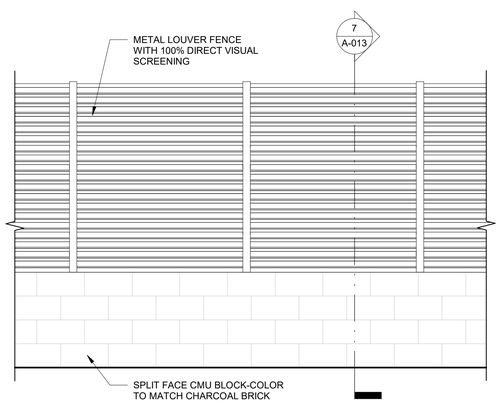

5 SECURE PARKING - TYPICAL FENCE ELEVATION
1/2" = 1'-0"

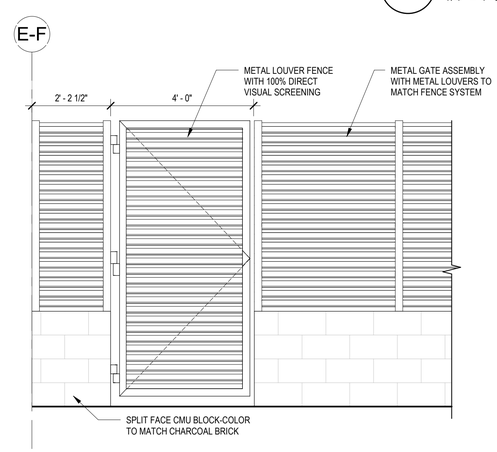

6 SECURE PARKING - GATE ELEVATION
1/2" = 1'-0"

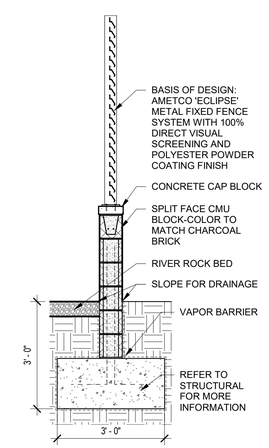

7 SECURE PARKING - SECTION
1/2" = 1'-0"

Architects Design Group

Architects and Planners
I.S.K. Reeves V, F.A.I.A.
Ian A. Reeves, A.I.A.
Susan Gantt A.I.A., LEED-AP

333 N. Knowles Ave.
Winter Park, Florida 32789
(407) 647-1706

Corporate Registration Number: BR1177

REGISTERED ARCHITECT IAN A. REEVES 22797 STATE OF TEXAS
06.05.2020

FIRE STATION NO.5

CITY OF LONGVIEW

100% BID SET

The architect hereby expressly reserves his common law copyright and other property rights in these drawings. These drawings shall not be reproduced without written permission and consent of the architect, nor are they to be assigned to any party without first obtaining written permission and consent.

REVISIONS/ADDENDA

Number	Description	Date Issued

SHEET TITLE:
ENLARGED SITE PLAN DETAILS

scale: As indicated
drawn: Author
checked: Checker
approved: Approver
date: June 5, 2020
PROJECT NUMBER:
1006
SHEET NUMBER:
A-013

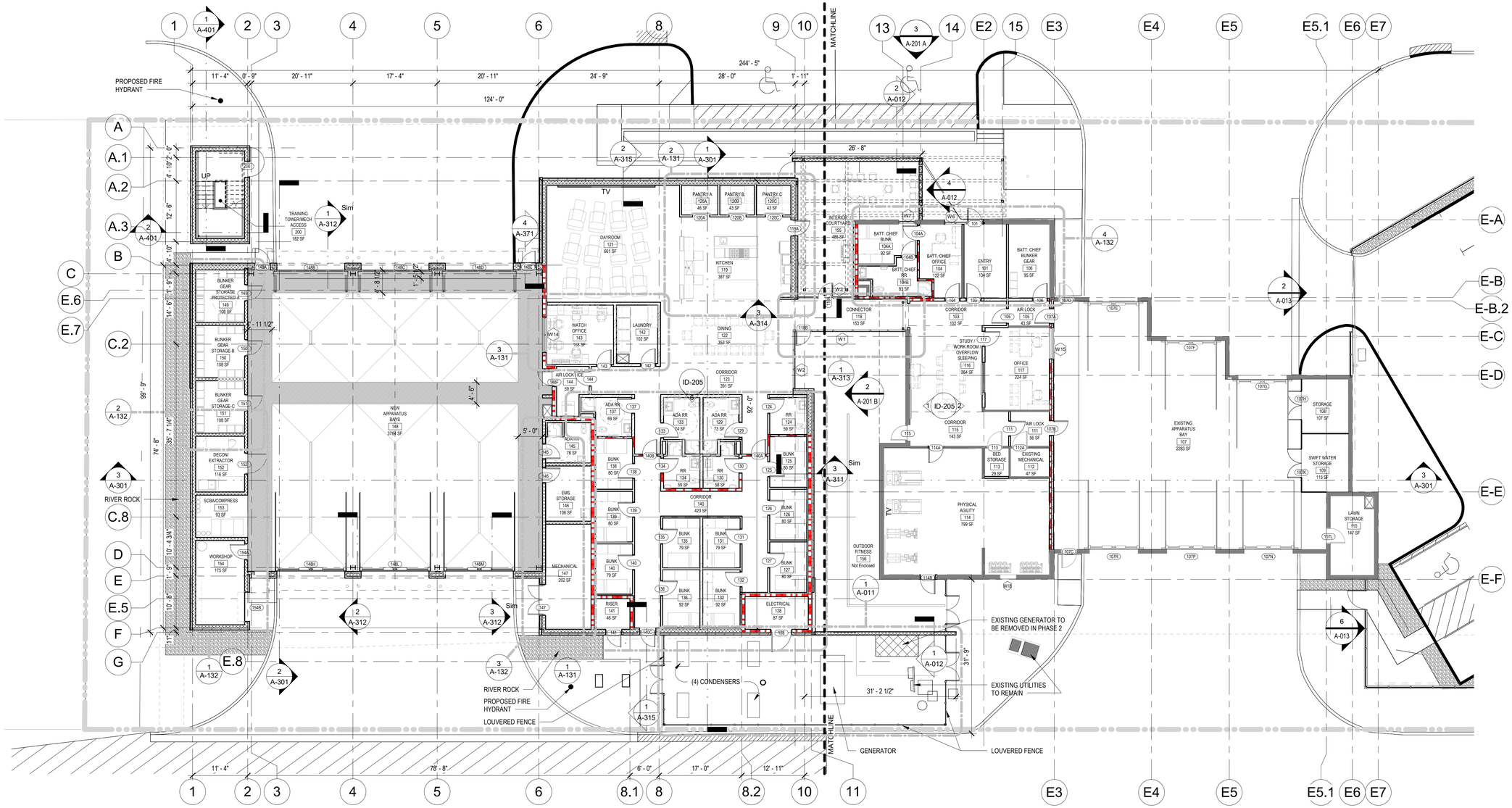

1 OVERALL FIRST FLOOR PLAN

3/32" = 1'-0"

SCHEDULE OF ALTERNATES

1. **DEDUCT ALTERNATE #1:** PROVIDE CHAIN LINK FENCE AND GATES FOR THE SECURE PARKING.
   BASE BID : PROVIDE MASONRY AND ALUMINUM METAL SCREEN AND METAL CANTILEVER GATES AS SHOWN ON THE BID SET
2. **DEDUCT ALTERNATE #2:** KEEP EXISTING APPARATUS BAY DOORS FOR THE EXISTING APPARATUS ROOM. (BOTH SIDES).
   BASE BID : PROVIDE NEW SECTIONAL DOORS AS SHOWN IN THE DOOR SCHEDULE AND SPECIFICATIONS AND BID SET.
3. **DEDUCT ALTERNATE #3:** PROVIDE SECTIONAL DOORS FOR THE NEW APPARATUS BAY EGRESS SIDE TO MATCH SECTIONAL DOORS SHOWN FOR THE INGRESS OF THE NEW APPARATUS BAY.
   BASE BID : PROVIDE BI-FOLD DOORS PER SPECIFICATIONS AND DOOR SCHEDULE FOR THE EGRESS SIDE OF THE NEW APPARATUS BAY ROOM.
4. **DEDUCT ALTERNATE #4:** KEEP EXISTING CEILING AND LIGHT FIXTURES FOR THE EXISTING APPARATUS BAY ROOM.
   BASE BID : REMOVE EXISTING SUSPENDED CEILING TILES AND GRID, CLEAN AND PAINT EXISTING STRUCTURE AND PROVIDE NEW LIGHT FIXTURE AS SHOWN IN THE BID SET.
5. **DEDUCT ALTERNATE #5:** KEEP EXISTING BRICK AND EXTERIOR SURFACES AS IS.
   BASE BID : EXTERIOR BRICK TO BE PAINTED.

GENERAL NOTES

1. ALL PLAN DIMENSIONS SHOWN ARE TO TOP AND RIGHT FACE OF STUD WALL FRAMING & COLUMN CENTERLINES.
2. DO NOT SCALE DRAWINGS. USE WRITTEN DIMENSIONS ONLY.
3. REFER TO A-6.01 SERIES FOR DOOR AND FRAME SCHEDULES, ELEVATIONS, AND DETAILS.
4. REFER TO A-5.11 SERIES FOR WINDOW ELEVATIONS AND DETAILS.
5. SHADED AREA INDICATES FLAT SLAB SURFACE.
6. SHADED ITEMS TO BE REMOVED IN PHASE 2.

KEY PLAN

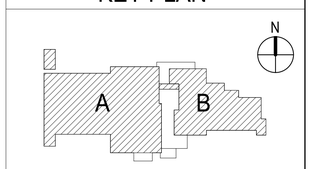

Architects Design Group

Architects and Planners

I.S.K. Reeves V, F.A.I.A.
Ian A. Reeves, A.I.A.
Susan Gantt A.I.A., LEED-AP

333 N. Knowles Ave.
Winter Park, Florida 32789
(407) 647-1706

Corporate Registration Number: BR1177

REGISTERED ARCHITECT IAN A. REEVES 22797 STATE OF TEXAS

06.05.2020

FIRE STATION NO.5

CITY OF LONGVIEW

100% BID SET

The architect hereby expressly reserves his common law copyright and other property rights in these drawings. These drawings shall not be reproduced without written permission and consent of the architect, nor are they to be assigned to any party without first obtaining written permission and consent.

REVISIONS/ADDENDA

Number	Description	Date Issued

SHEET TITLE:

OVERALL FIRST FLOOR PLAN

scale: As indicated
drawn: ADG DALLAS
checked: SB/MBV
approved: IAR
date: June 5, 2020

PROJECT NUMBER:

1006

SHEET NUMBER:

A-101

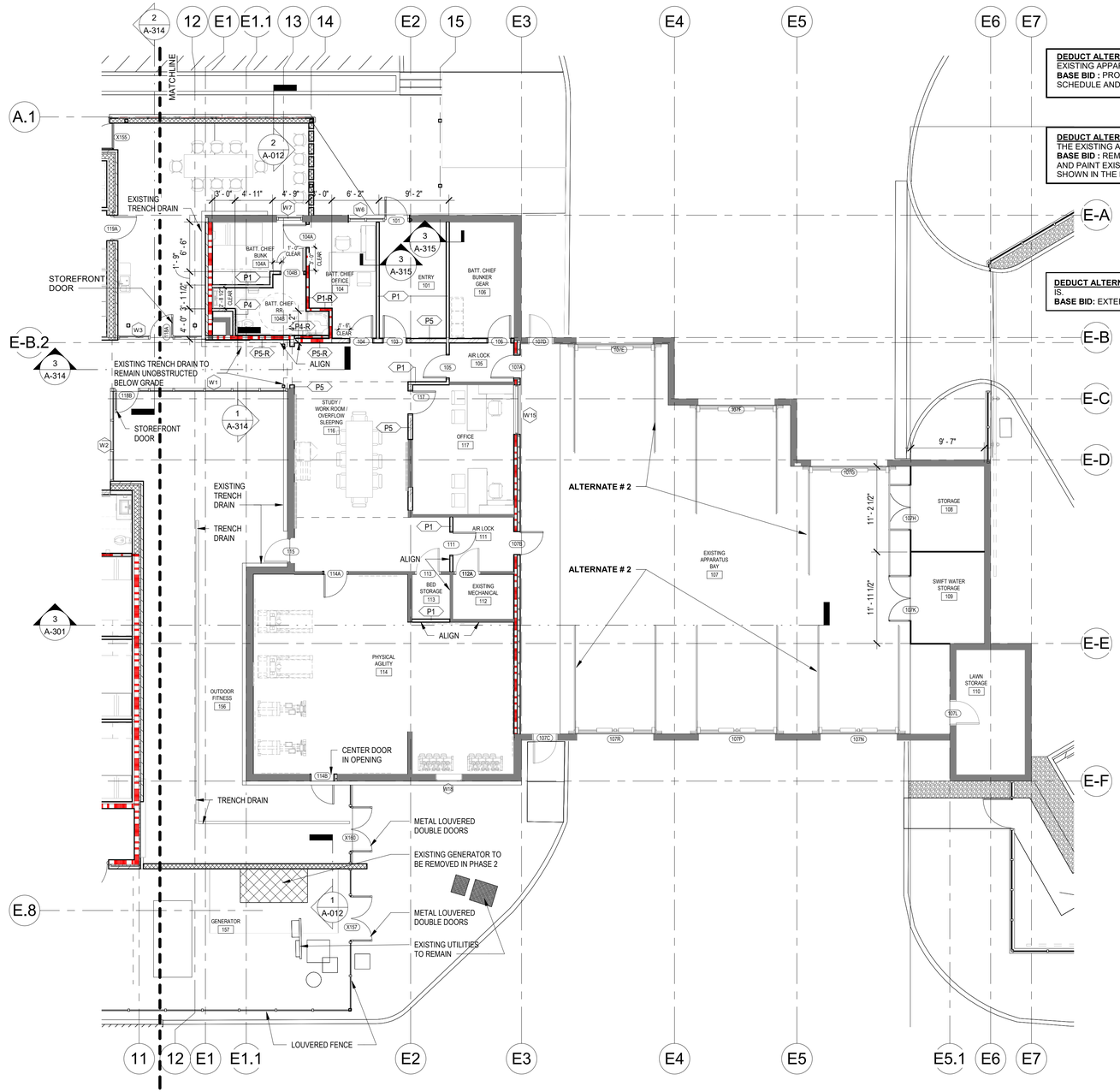

1 FLOOR PLAN - ZONE B

1/8" = 1'-0"

DEDUCT ALTERNATE #2: KEEP EXISTING APPARATUS BAY DOORS FOR THE EXISTING APPARATUS ROOM. (BOTH SIDES).
BASE BID : PROVIDE NEW SECTIONAL DOORS AS SHOWN IN THE DOOR SCHEDULE AND SPECIFICATIONS AND BID SET.

DEDUCT ALTERNATE #4: KEEP EXISTING CEILING AND LIGHT FIXTURES FOR THE EXISTING APPARATUS BAY ROOM.
BASE BID : REMOVE EXISTING SUSPENDED CEILING TILES AND GRID, CLEAN AND PAINT EXISTING STRUCTURE AND PROVIDE NEW LIGHT FIXTURE AS SHOWN IN THE BID SET.

DEDUCT ALTERNATE #5: KEEP EXISTING BRICK AND EXTERIOR SURFACES AS IS.
BASE BID: EXTERIOR BRICK TO BE PAINTED.

GENERAL NOTES

1. ALL PLAN DIMENSIONS SHOWN ARE TO TOP AND RIGHT FACE OF STUD WALL FRAMING & COLUMN CENTERLINES.
2. DO NOT SCALE DRAWINGS. USE WRITTEN DIMENSIONS ONLY.
3. REFER TO A-6.01 SERIES FOR DOOR AND FRAME SCHEDULES, ELEVATIONS, AND DETAILS.
4. REFER TO A-5.11 SERIES FOR WINDOW ELEVATIONS AND DETAILS.
5. SHADED AREA INDICATES FLAT SLAB SURFACE.
6. SHADED ITEMS TO BE REMOVED IN PHASE 2.

KEY PLAN

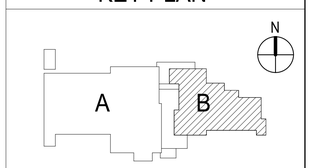

Architects Design Group

Architects and Planners

I.S.K. Reeves V, F.A.I.A.
Ian A. Reeves, A.I.A.
Susan Gantt A.I.A., LEED-AP

333 N. Knowles Ave.
Winter Park, Florida 32789
(407) 647-1706

Corporate Registration Number: BR1177

REGISTERED ARCHITECT IAN A. REEVES 22797 STATE OF TEXAS

06.05.2020

FIRE STATION NO.5

CITY OF LONGVIEW

100% BID SET

The architect hereby expressly reserves his common law copyright and other property rights in these drawings. These drawings shall not be reproduced without written permission and consent of the architect, nor are they to be assigned to any party without first obtaining written permission and consent.

REVISIONS/ADDENDA

Number	Description	Date Issued

SHEET TITLE:

FLOOR PLAN - ZONE B

scale: As indicated
drawn: ADG DALLAS
checked: SB/MBV
approved: IAR
date: June 5, 2020

PROJECT NUMBER:

1006

SHEET NUMBER:

A-101B

DEDUCT ALTERNATE #3: PROVIDE SECTIONAL DOORS FOR THE NEW APPARATUS BAY EGRESS SIDE TO MATCH SECTIONAL DOORS SHOWN FOR THE INGRESS OF THE NEW APPARATUS BAY.
BASE BID : PROVIDE BI-FOLD DOORS PER SPECIFICATIONS AND DOOR SCHEDULE FOR THE EGRESS SIDE OF THE NEW APPARATUS BAY ROOM.

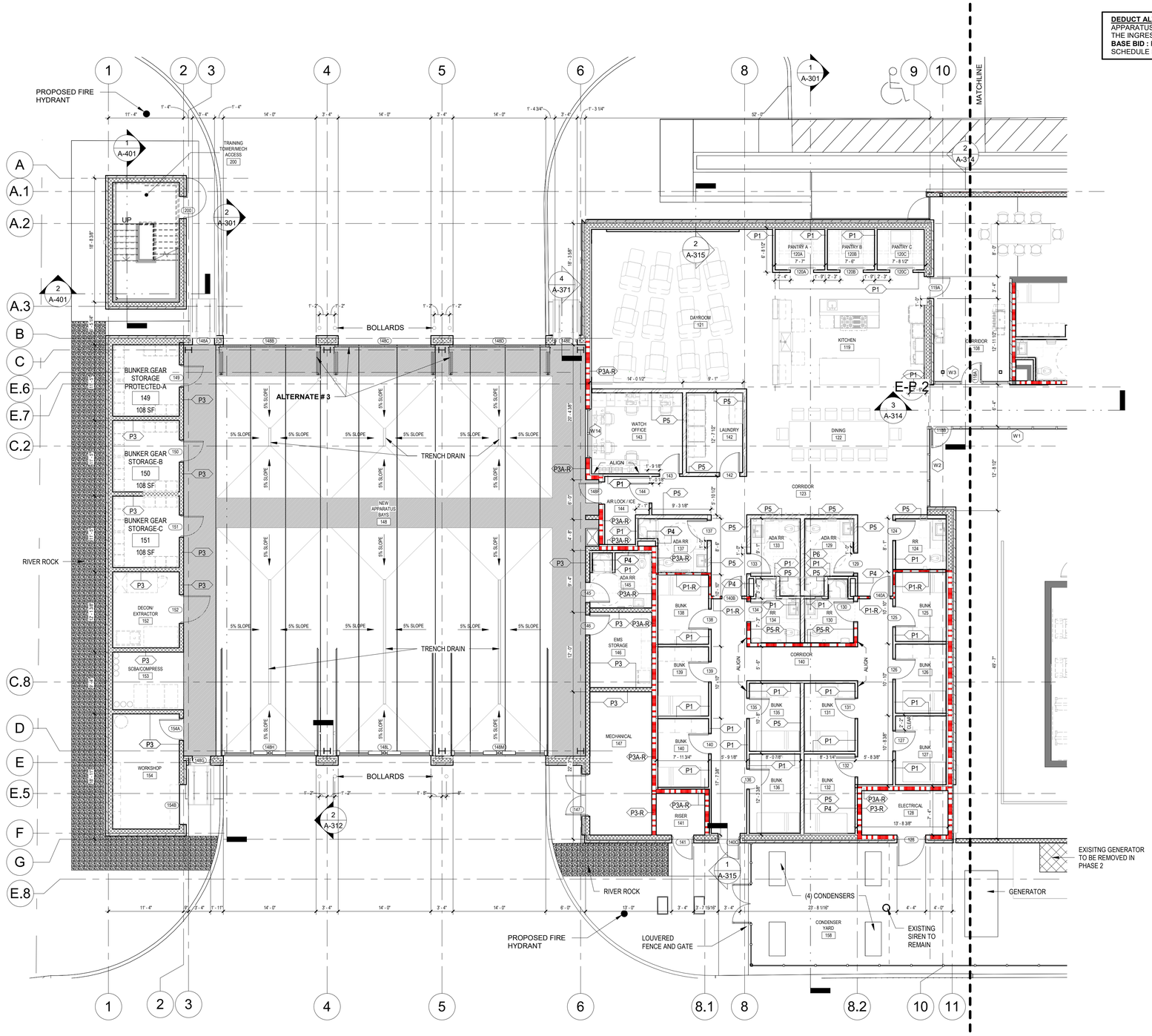

1 FLOOR PLAN - ZONE A
1/8" = 1'-0"

GENERAL NOTES

1. ALL PLAN DIMENSIONS SHOWN ARE TO TOP AND RIGHT FACE OF STUD WALL FRAMING & COLUMN CENTERLINES.
2. DO NOT SCALE DRAWINGS. USE WRITTEN DIMENSIONS ONLY.
3. REFER TO A-6.01 SERIES FOR DOOR AND FRAME SCHEDULES, ELEVATIONS, AND DETAILS.
4. REFER TO A-5.11 SERIES FOR WINDOW ELEVATIONS AND DETAILS.
5. SHADED AREA INDICATES FLAT SLAB SURFACE.
6. SHADED ITEMS TO BE REMOVED IN PHASE 2.

KEY PLAN

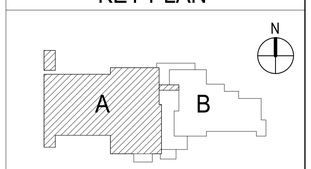

Architects Design Group

Architects and Planners
I.S.K. Reeves V, F.A.I.A.
Ian A. Reeves, A.I.A.
Susan Gantt A.I.A., LEED-AP

333 N. Knowles Ave.
Winter Park, Florida 32789
(407) 647-1706

Corporate Registration Number: BR1177

REGISTERED ARCHITECT IAN A. REEVES 22797 STATE OF TEXAS
06.05.2020

FIRE STATION NO.5

CITY OF LONGVIEW

100% BID SET

The architect hereby expressly reserves his common law copyright and other property rights in these drawings. These drawings shall not be reproduced without written permission and consent of the architect, nor are they to be assigned to any party without first obtaining written permission and consent.

REVISIONS/ADDENDA

Number	Description	Date Issued

SHEET TITLE:
FLOOR PLAN - ZONE A

scale: As indicated
drawn: ADG DALLAS
checked: SB/MBV
approved: IAR
date: June 5, 2020
PROJECT NUMBER:
1006
SHEET NUMBER:
A-101A

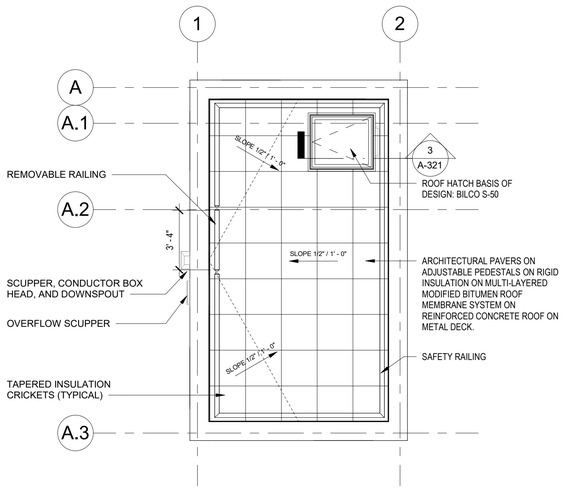

6 TRAINING TOWER ROOF
1/4" = 1'-0"

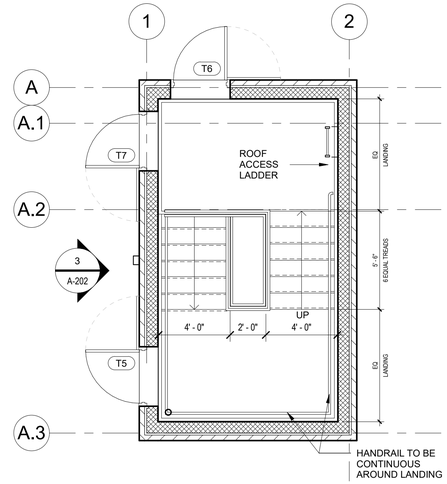

5 TRAINING TOWER TOP LANDING - 3
1/4" = 1'-0"

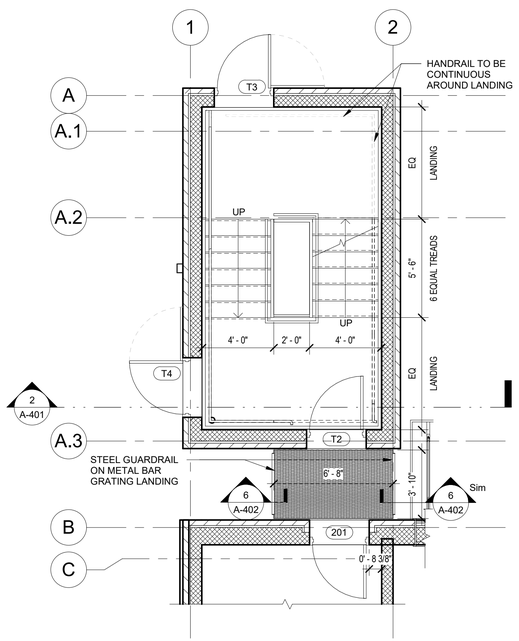

4 TRAINING TOWER TO MECH - 2
1/4" = 1'-0"

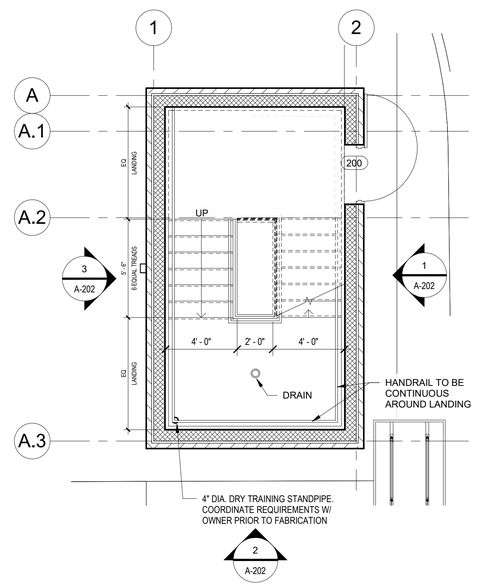

3 TRAINING TOWER PLAN - 1
1/4" = 1'-0"

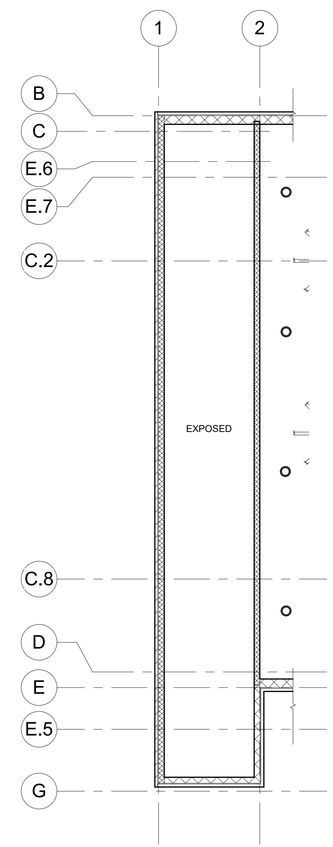

2 ELEVATED MECH RCP
1/8" = 1'-0"

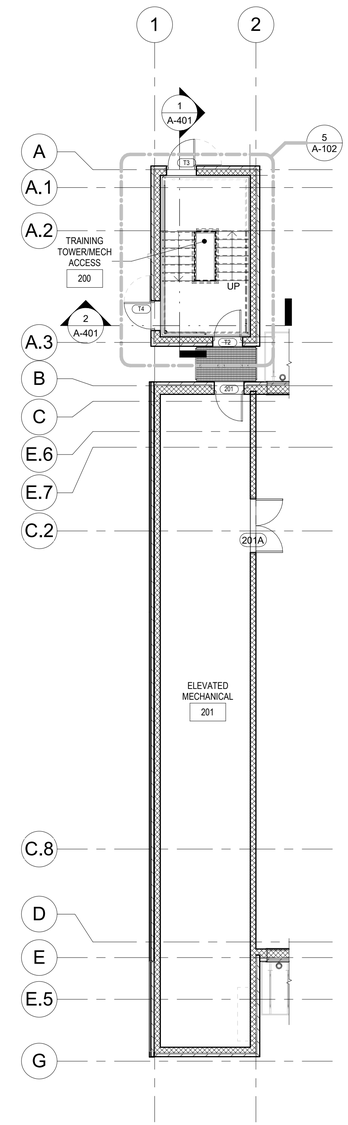

1 ELEVATED MECH PLAN
1/8" = 1'-0"

Architects Design Group

Architects and Planners

I.S.K. Reeves V, F.A.I.A.
Ian A. Reeves, A.I.A.
Susan Gantt A.I.A., LEED-AP

333 N. Knowles Ave.
Winter Park, Florida 32789
(407) 647-1706

Corporate Registration Number: BR1177

REGISTERED ARCHITECT IAN A. REEVES 22797 STATE OF TEXAS
06.05.2020

FIRE STATION NO.5

CITY OF LONGVIEW

100% BID SET

The architect hereby expressly reserves his common law copyright and other property rights in these drawings. These drawings shall not be reproduced without written permission and consent of the architect, nor are they to be assigned to any party without first obtaining written permission and consent.

REVISIONS/ADDENDA

Number	Description	Date Issued

SHEET TITLE:

ELEVATED MECH AND TRAINING TOWER PLANS

scale: As indicated
drawn: ADG DALLAS
checked: SB/MBV
approved: IAR
date: June 5, 2020

PROJECT NUMBER:

1006

SHEET NUMBER:

A-102

DEDUCT ALTERNATE #2: KEEP EXISTING APPARATUS BAY DOORS FOR THE EXISTING APPARATUS ROOM. (BOTH SIDES).
BASE BID : PROVIDE NEW SECTIONAL DOORS AS SHOWN IN THE DOOR SCHEDULE AND SPECIFICATIONS AND BID SET.

DEDUCT ALTERNATE #4: KEEP EXISTING CEILING AND LIGHT FIXTURES FOR THE EXISTING APPARATUS BAY ROOM.
BASE BID : REMOVE EXISTING SUSPENDED CEILING TILES AND GRID, CLEAN AND PAINT EXISTING STRUCTURE AND PROVIDE NEW LIGHT FIXTURE AS SHOWN IN THE BID SET.

DEDUCT ALTERNATE #5: KEEP EXISTING BRICK AND EXTERIOR SURFACES AS IS.
BASE BID: EXTERIOR BRICK TO BE PAINTED.

GENERAL NOTES

1. ALL EXPOSED STRUCTURE AND VISIBLE ITEMS ABOVE 12'-0" AFF (UTILITY, DUCT WORK, PIPING, ETC) TO BE PAINTED PER 099100, REFER TO FINISH LEGEND ID-402 FOR COLOR.
2. MOISTURE RESISTANT GYPSUM WALL BOARD TO BE USED IN WET LOCATIONS (SHOWERS AND BATHROOMS).
3. BULKHEADS OVER WALL-HUNG CABINETRY TO BE 1'-3" DEEP. BOTTOM OF GYPSUM BULKHEAD OVER CABINETRY TO BE AT 7'-0" AFF U.N.O., REFER TO INTERIOR ELEVATIONS.
4. ALL CEILINGS TO BE 9'-0" AFF. UNLESS NOTED OTHERWISE, REFER TO ENLARGED REFLECTED CEILING PLANS FOR CEILING HEIGHT INFORMATION.
5. ALL LIGHTING TO BE SUBMITTED WITH LIGHTING DESIGN PACKAGE FOR BIDDING AND BASIS OF DESIGN SELECTION BY ARCHITECT. INCLUDE FIXTURE TYPE, STYLE, COLOR, ETC.
6. ALL GWB CEILINGS TO BE PAINTED P-4 U.N.O. ON REFLECTED CEILING PLANS. SOFFITS TO BE PAINTED TO MATCH ADJACENT WALL U.N.O. REFER TO INTERIOR ELEVATIONS, WALL FINISH & ACCESSORY PLANS, FINISH SCHEDULES, AND FINISH LEGEND.
7. ALL LIGHTS IN CEILING TILES TO BE CENTERED IN TILE.
8. LIGHTS TO BE INSTALLED PER DIMENSIONS ON CEILING PLANS

CEILING PLAN LEGEND

- CEILING MOUNTED PROJECTOR
- CEILING HEIGHT
- 2 x 2 TROFFER
- SUPPLY AIR REGISTER
- RETURN AIR REGISTER
- EXHAUST AIR REGISTER
- LINEAR AIR REGISTER
- PENDANT LIGHT FIXTURE
- STRIP RECESSED LIGHT FIXTURE
- RECESSED LIGHT FIXTURE
- WALL MOUNTED LIGHT FIXTURE (SCONCE)
- SUSPENDED STRIP LIGHT FIXTURE
- SPRINKLER HEAD
- SMOKE DETECTOR (SD)
- CEILING FAN WITH LIGHT KIT
- WALL MOUNT FAN
- EXIT LIGHT

- METAL SOFFIT
- GYPSUM WALL BOARD
- EXPOSED STRUCTURE
- 2x2 ACOUSTICAL CEILING GRID
- PLASTER AND METAL LATH
- SUSPENDED ACOUSTICAL WOOD CEILING PANEL SYSTEM
- AREA OF EXISTING CONDITIONS TO REMAIN

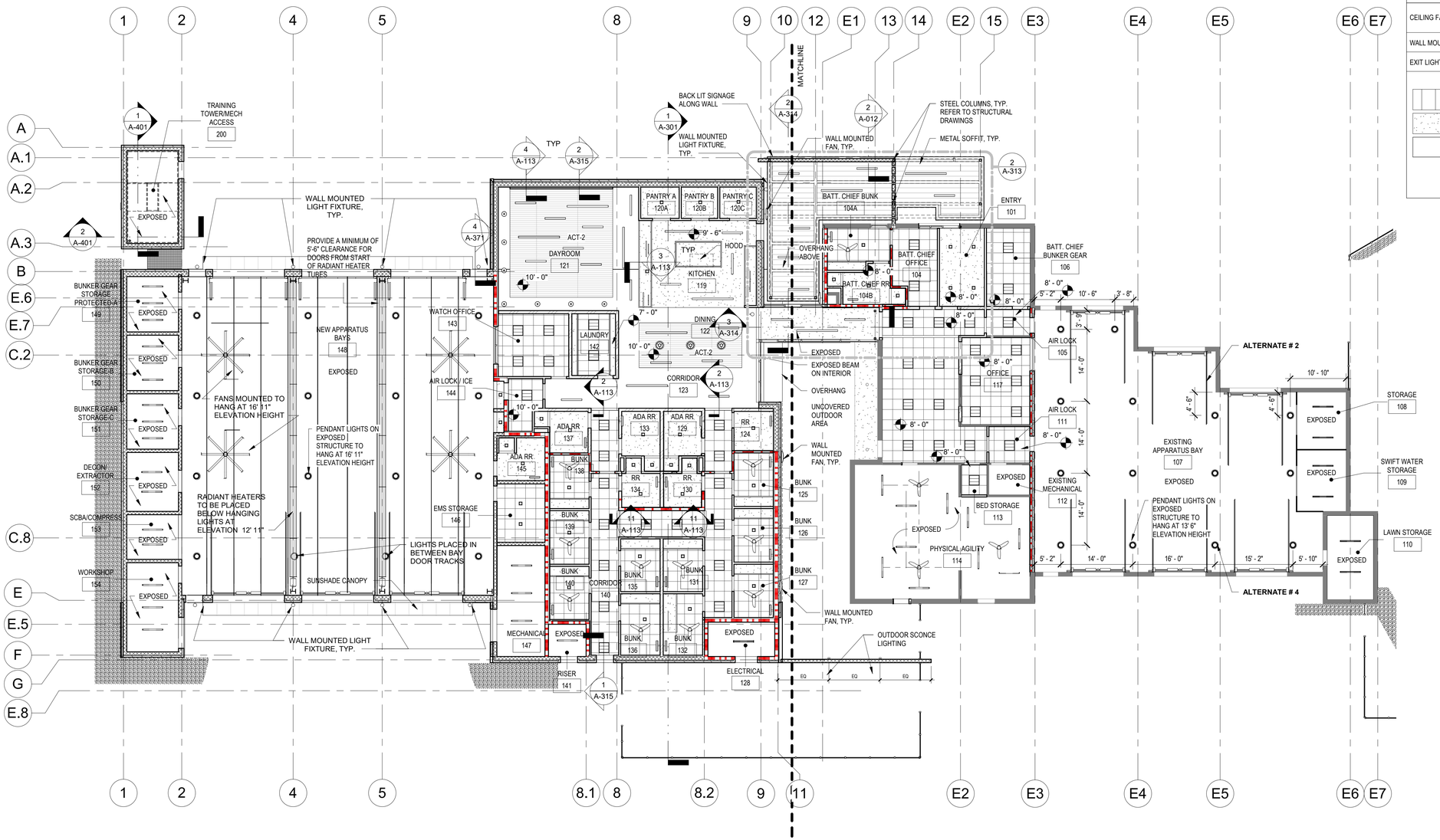

1 REFLECTED CEILING PLAN
3/32" = 1'-0"

KEY PLAN

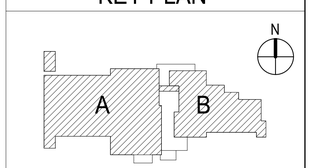

Architects Design Group

Architects and Planners
I.S.K. Reeves V, F.A.I.A.
Ian A. Reeves, A.I.A.
Susan Gantt A.I.A., LEED-AP

333 N. Knowles Ave.
Winter Park, Florida 32789
(407) 647-1706

Corporate Registration Number: BR1177

REGISTERED ARCHITECT IAN A. REEVES 22797 STATE OF TEXAS
06.05.2020

FIRE STATION NO.5

CITY OF LONGVIEW

100% BID SET

The architect hereby expressly reserves his common law copyright and other property rights in these drawings. These drawings shall not be reproduced without written permission and consent of the architect, nor are they to be assigned to any party without first obtaining written permission and consent.

REVISIONS/ADDENDA

Number	Description	Date Issued

SHEET TITLE:
OVERALL REFLECTED CEILING PLAN

scale: As indicated
drawn: ADG DALLAS
checked: SB/MBV
approved: IAR
date: June 5, 2020

PROJECT NUMBER:
1006

SHEET NUMBER:
A-111

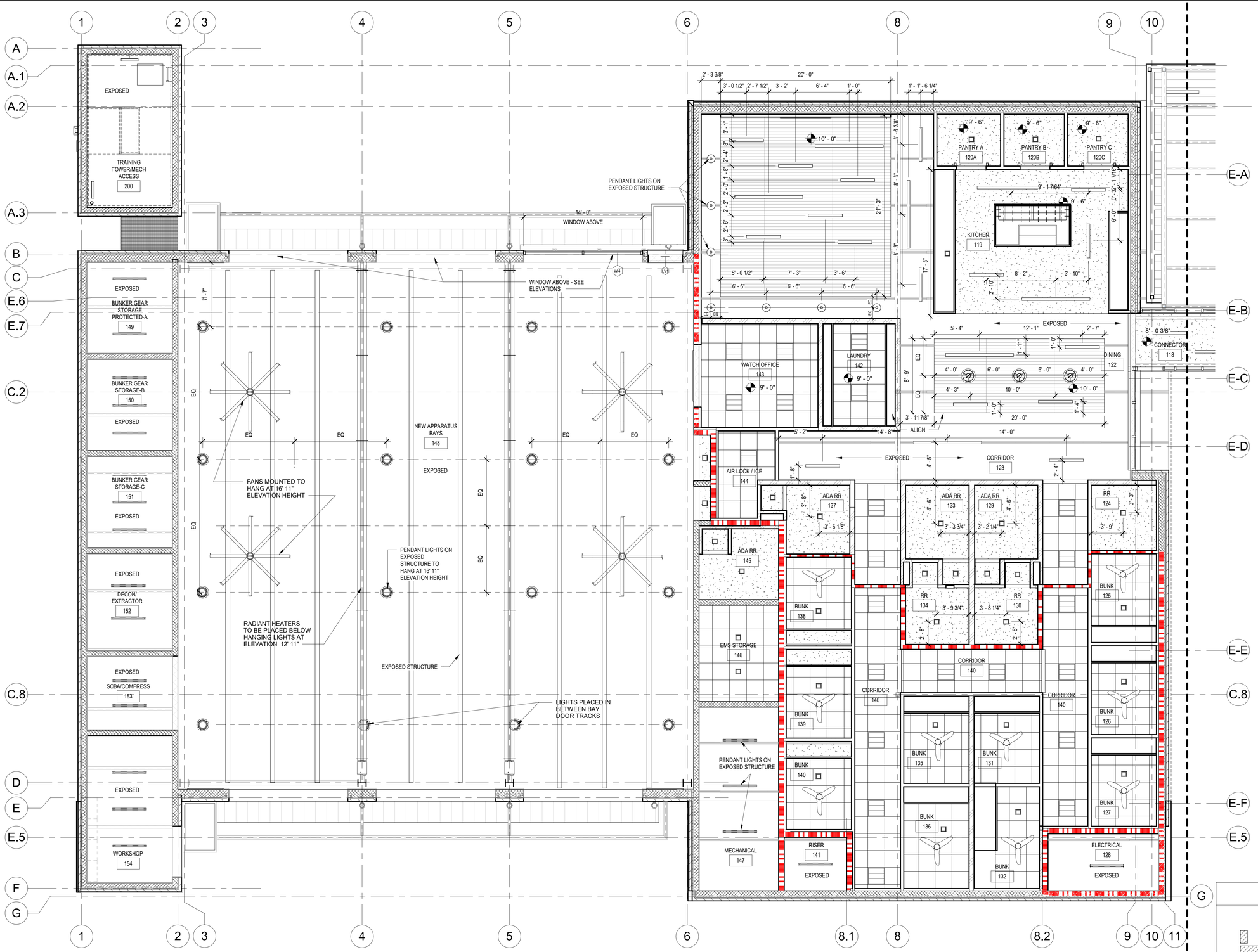

1 REFLECTED CEILING PLAN - ZONE A

3/16" = 1'-0"

KEY PLAN

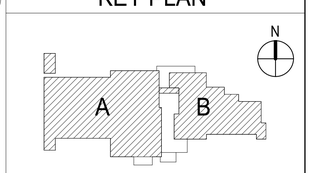

Architects Design Group

Architects and Planners

I.S.K. Reeves V, F.A.I.A.
Ian A. Reeves, A.I.A.
Susan Gantt A.I.A., LEED-AP

333 N. Knowles Ave.
Winter Park, Florida 32789
(407) 647-1706

Corporate Registration Number: BR1177

REGISTERED ARCHITECT IAN A. REEVES 22797 STATE OF TEXAS

06.05.2020

FIRE STATION NO.5

CITY OF LONGVIEW

100% BID SET

The architect hereby expressly reserves his common law copyright and other property rights in these drawings. These drawings shall not be reproduced without written permission and consent of the architect, nor are they to be assigned to any party without first obtaining written permission and consent.

REVISIONS/ADDENDA

Number	Description	Date Issued

SHEET TITLE:

REFLECTED CEILING PLAN - ZONE A

scale: 3/16" = 1'-0"
drawn: ADG DALLAS
checked: SB/MBV
approved: IAR
date: June 5, 2020

PROJECT NUMBER:

1006

SHEET NUMBER:

A-111A

DEDUCT ALTERNATE #2: KEEP EXISTING APPARATUS BAY DOORS FOR THE EXISTING APPARATUS ROOM. (BOTH SIDES).
BASE BID : PROVIDE NEW SECTIONAL DOORS AS SHOWN IN THE DOOR SCHEDULE AND SPECIFICATIONS AND BID SET.

DEDUCT ALTERNATE #4: KEEP EXISTING CEILING AND LIGHT FIXTURES FOR THE EXISTING APPARATUS BAY ROOM.
BASE BID : REMOVE EXISTING SUSPENDED CEILING TILES AND GRID. CLEAN AND PAINT EXISTING STRUCTURE AND PROVIDE NEW LIGHT FIXTURE AS SHOWN IN THE BID SET.

DEDUCT ALTERNATE #5: KEEP EXISTING BRICK AND EXTERIOR SURFACES AS IS.
BASE BID: EXTERIOR BRICK TO BE PAINTED.

1 REFLECTED CEILING PLAN - ZONE B
3/16" = 1'-0"

KEY PLAN

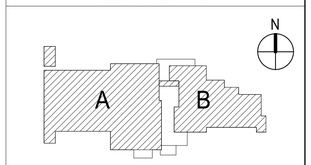

Architects Design Group

Architects and Planners
I.S.K. Reeves V, F.A.I.A.
Ian A. Reeves, A.I.A.
Susan Gantt A.I.A., LEED-AP

333 N. Knowles Ave.
Winter Park, Florida 32789
(407) 647-1706

Corporate Registration
Number: BR1177

REGISTERED ARCHITECT IAN A. REEVES 22797 STATE OF TEXAS
06.05.2020

FIRE STATION NO.5

CITY OF LONGVIEW

100% BID SET

The architect hereby expressly reserves his common law copyright and other property rights in these drawings. These drawings shall not be reproduced without written permission and consent of the architect, nor are they to be assigned to any party without first obtaining written permission and consent.

REVISIONS/ADDENDA

Number	Description	Date Issued

SHEET TITLE:
REFLECTED CEILING PLAN - ZONE B

scale: As indicated
drawn: ADG DALLAS
checked: SB/MBV
approved: IAR
date: June 5, 2020
PROJECT NUMBER:
1006
SHEET NUMBER:
A-111B

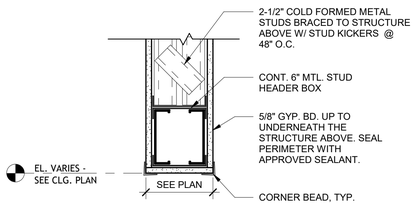

1 CLG. BULKHEAD SECTION @ OPEN CLG EA.SIDE
1 1/2" = 1'-0"

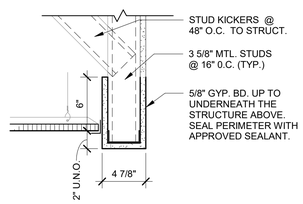

2 CLG. BULKHEAD SECTION @ OPEN CLG.
1 1/2" = 1'-0"

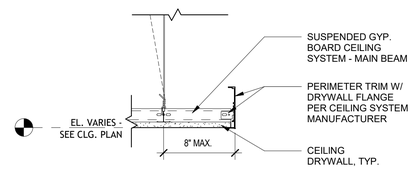

3 CLG. SUSPENDED GYP BOARD CLOUD
1 1/2" = 1'-0"

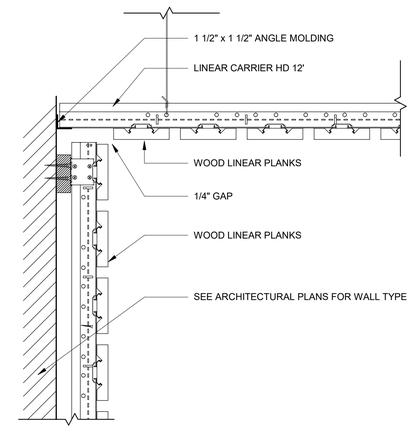

4 WOOD CEILING TO WALL
1 1/2" = 1'-0"

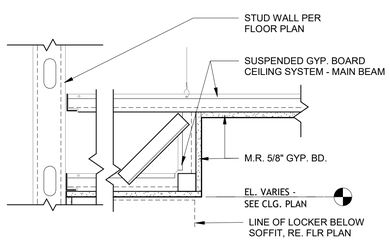

5 CLG. SOFFIT @ WALL
1 1/2" = 1'-0"

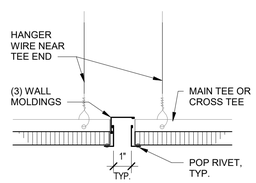

6 ACT SEPARATION JOINT
3" = 1'-0"

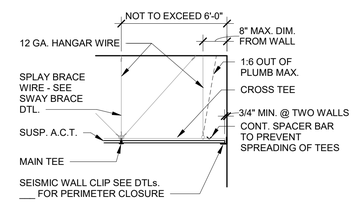

NOTES:
1. INSTALL SUSP. CEIL. AND SUPPORT LIGHT FIXTURES, CABLE TRAYS, CONDUITS AND CEILING MOUNTED AIR TERMINALS IN CONFORMANCE W/ CISCA 3-4 AND ASCE 7-02.
2. USE ONLY ASTM C635 HEAVY DUTY GRID SYSTEM.
3. SPLAY BRACE WIRES ARE REQUIRED FOR AREAS > 1,000 S.F.
4. AREAS > 2,500 S.F. REQUIRE A SEPARATION JOINT. SEE RCP'S FOR LOCATION.
5. PROVIDE 2" LEDGE W/ 1" MIN. CLEARANCE AT CEILING PENETRATIONS (E.G.: SPRINKLER HEADS, COLUMNS, ETC...)

7 ACT WALL BRACING
1/2" = 1'-0"

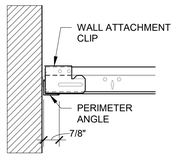

NOTE: USE THIS DETAIL ON TWO ADJACENT WALLS

8 PERIMETER CLOSURE- TIGHT WALL
3" = 1'-0"

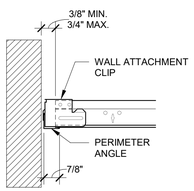

NOTE: USE THIS DETAIL ON TWO ADJACENT WALLS

9 PERIMETER CLOSURE - FLOATING WALL
3" = 1'-0"

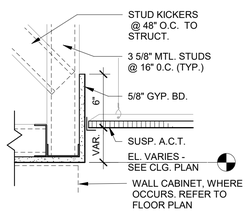

10 CLG. SOFFIT SECTION
1 1/2" = 1'-0"

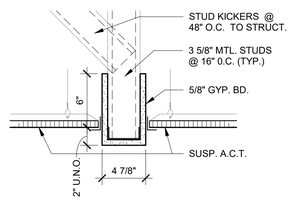

11 CLG. BULKHEAD SECTION
1 1/2" = 1'-0"

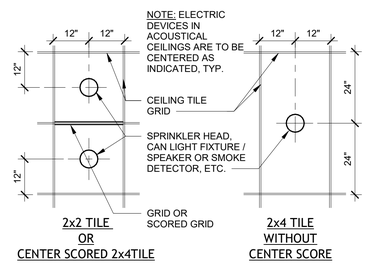

12 TYP. CLG. DEVICE LOCATION
1/2" = 1'-0"

Architects Design Group

Architects and Planners

I.S.K. Reeves V, F.A.I.A.
Ian A. Reeves, A.I.A.
Susan Gantt A.I.A., LEED-AP

333 N. Knowles Ave.
Winter Park, Florida 32789
(407) 647-1706

Corporate Registration Number: BR1177

REGISTERED ARCHITECT IAN A. REEVES 22797 STATE OF TEXAS
06.05.2020

FIRE STATION NO.5

CITY OF LONGVIEW

100% BID SET

The architect hereby expressly reserves his common law copyright and other property rights in these drawings. These drawings shall not be reproduced without written permission and consent of the architect, nor are they to be assigned to any party without first obtaining written permission and consent.

REVISIONS/ADDENDA

Number	Description	Date Issued

SHEET TITLE:
CEILING DETAILS

scale: As indicated
drawn: ADG DALLAS
checked: SB/MBV
approved: IAR
date: June 5, 2020

PROJECT NUMBER:
1006

SHEET NUMBER:
A-113

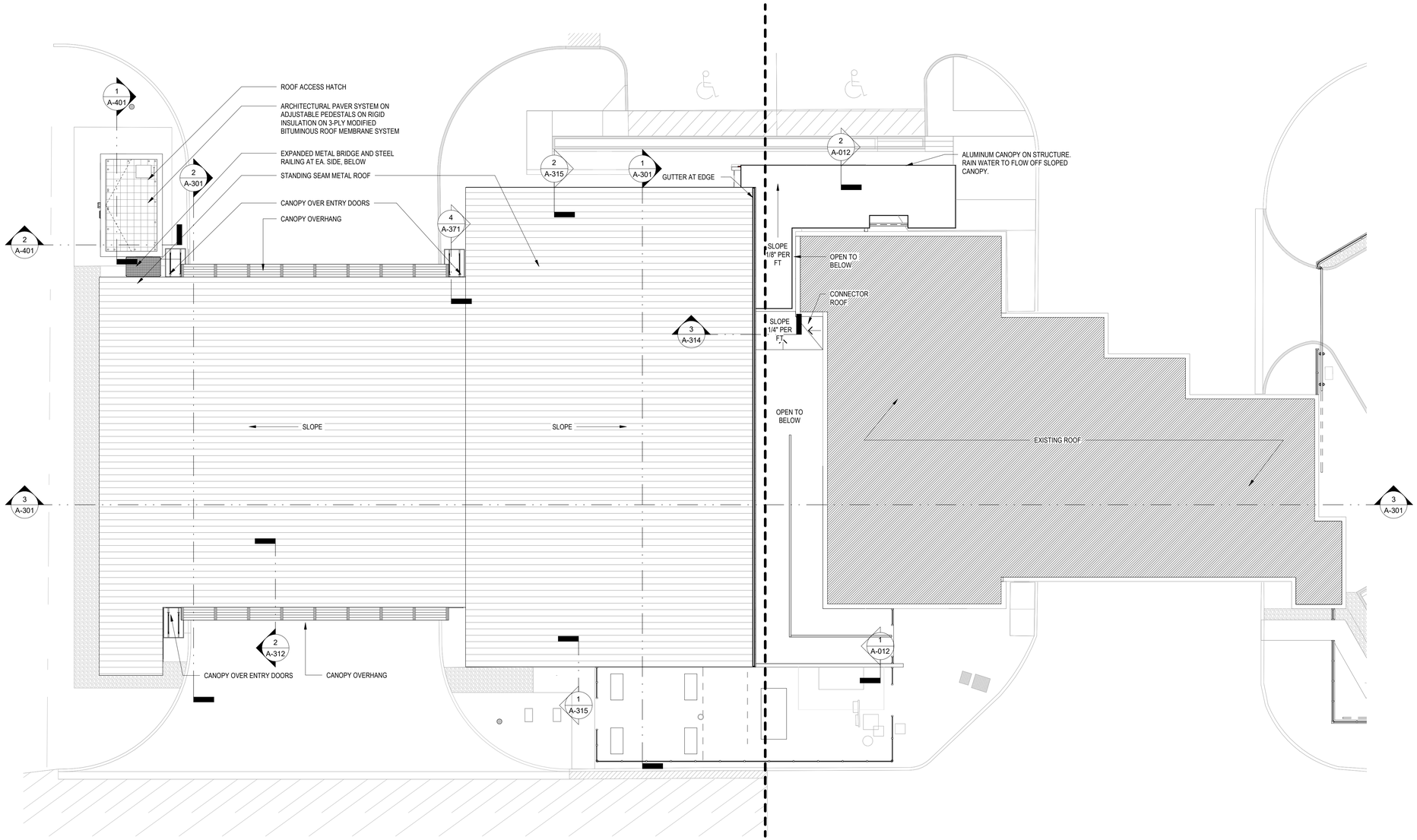

1 ROOF PLAN
3/32" = 1'-0"

KEY PLAN

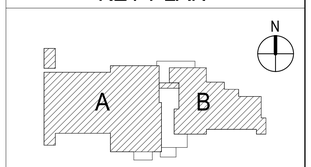

Architects Design Group

Architects and Planners
I.S.K. Reeves V, F.A.I.A.
Ian A. Reeves, A.I.A.
Susan Gantt A.I.A., LEED-AP

333 N. Knowles Ave.
Winter Park, Florida 32789
(407) 647-1706

Corporate Registration
Number: BR1177

REGISTERED ARCHITECT IAN A. REEVES 22797 STATE OF TEXAS
06.05.2020

FIRE STATION NO.5

CITY OF LONGVIEW

100% BID SET

The architect hereby expressly reserves his common law copyright and other property rights in these drawings. These drawings shall not be reproduced without written permission and consent of the architect, nor are they to be assigned to any party without first obtaining written permission and consent.

REVISIONS/ADDENDA

Number	Description	Date Issued

SHEET TITLE:
ROOF PLAN

scale: 3/32" = 1'-0"
drawn: ADG DALLAS
checked: SB/MBV
approved: IAR
date: June 5, 2020
PROJECT NUMBER:
1006
SHEET NUMBER:
A-121

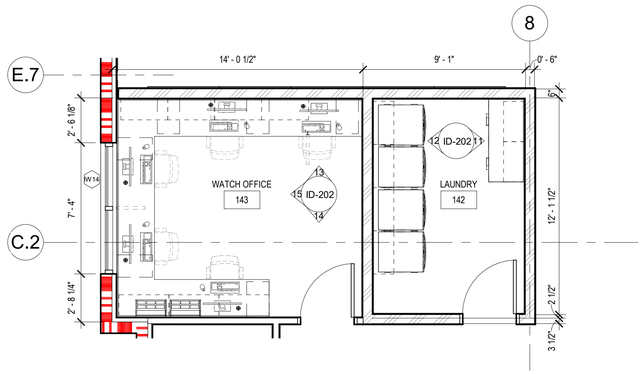

3 WATCH OFFICE / LAUNDRY
1/4" = 1'-0"

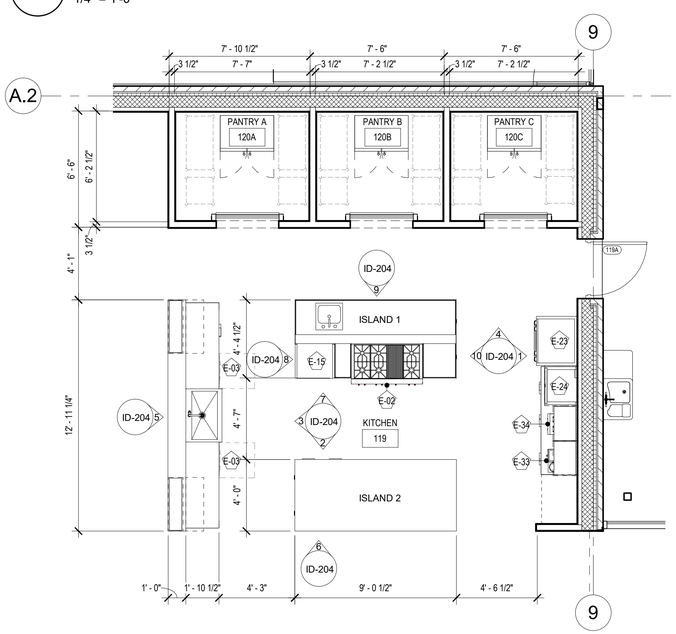

2 KITCHEN
1/4" = 1'-0"

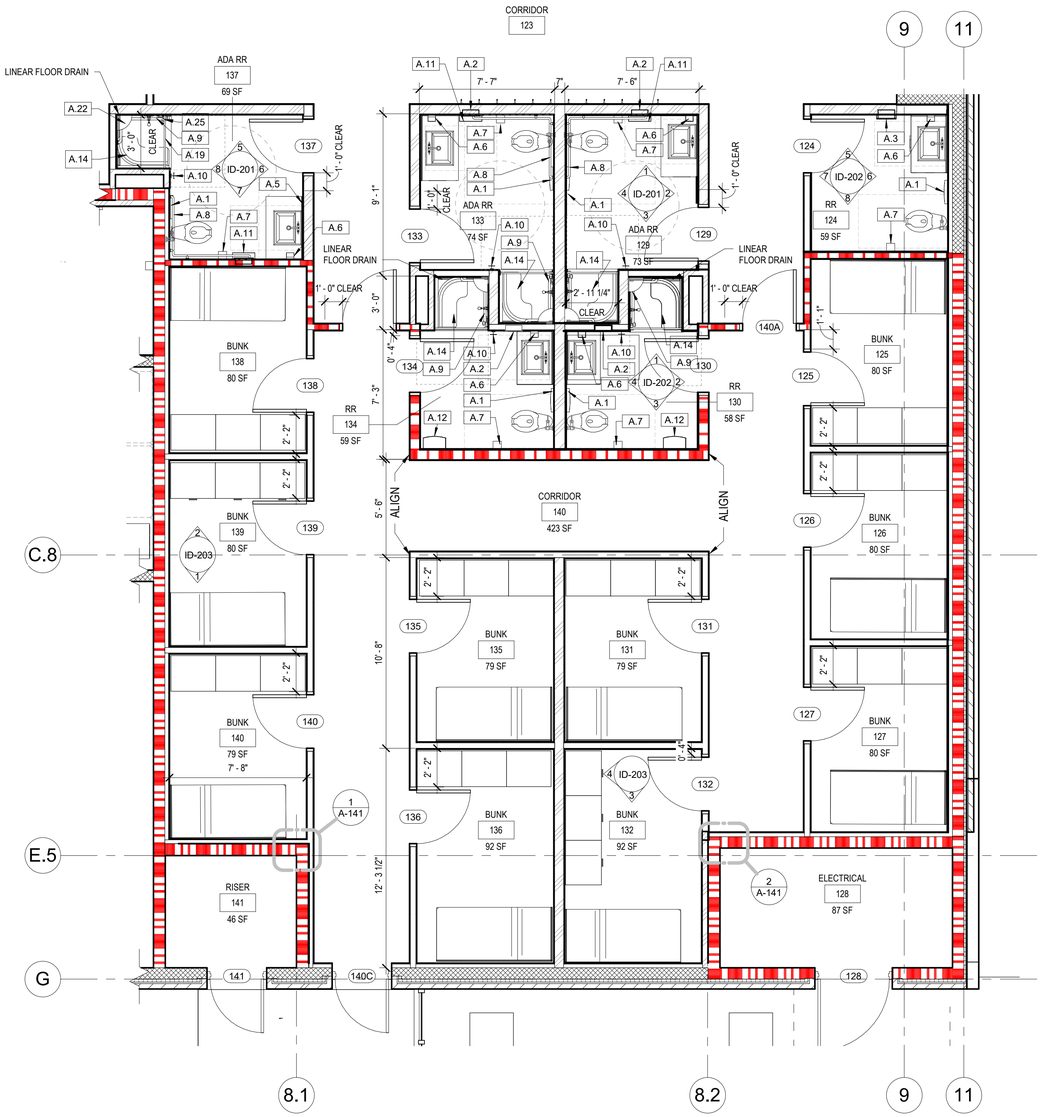

1 BUNKS / BATHROOMS
1/4" = 1'-0"

Architects Design Group

Architects and Planners

I.S.K. Reeves V, F.A.I.A.
Ian A. Reeves, A.I.A.
Susan Gantt A.I.A., LEED-AP

333 N. Knowles Ave.
Winter Park, Florida 32789
(407) 647-1706

Corporate Registration
Number: BR1177

REGISTERED ARCHITECT
IAN A. REEVES
22797
STATE OF TEXAS
06.05.2020

FIRE STATION NO.5

CITY OF LONGVIEW

100% BID SET

The architect hereby expressly reserves his common law copyright and other property rights in these drawings. These drawings shall not be reproduced without written permission and consent of the architect, nor are they to be assigned to any party without first obtaining written permission and consent.

REVISIONS/ADDENDA

Number	Description	Date Issued

SHEET TITLE:

ENLARGED PLANS

scale: 1/4" = 1'-0"
drawn: ADG DALLAS
checked: SB/MBV
approved: IAR
date: June 5, 2020
PROJECT NUMBER:
1006
SHEET NUMBER:
A-131

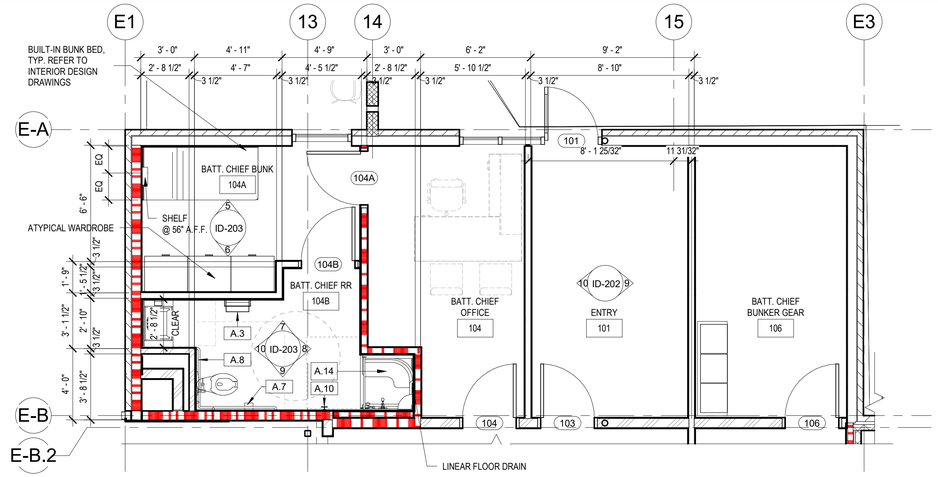

4 LOBBY / CHIEF BUNK

1/4" = 1'-0"

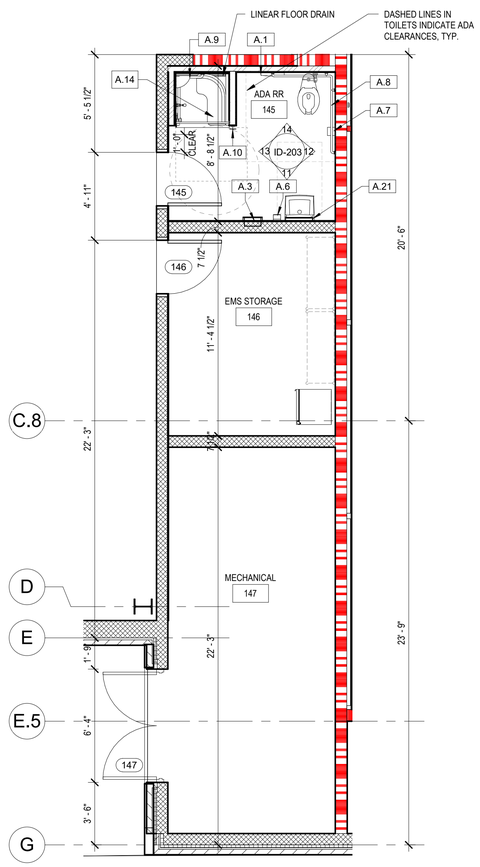

3 MECH, EMS STOR, ADA RR

1/4" = 1'-0"

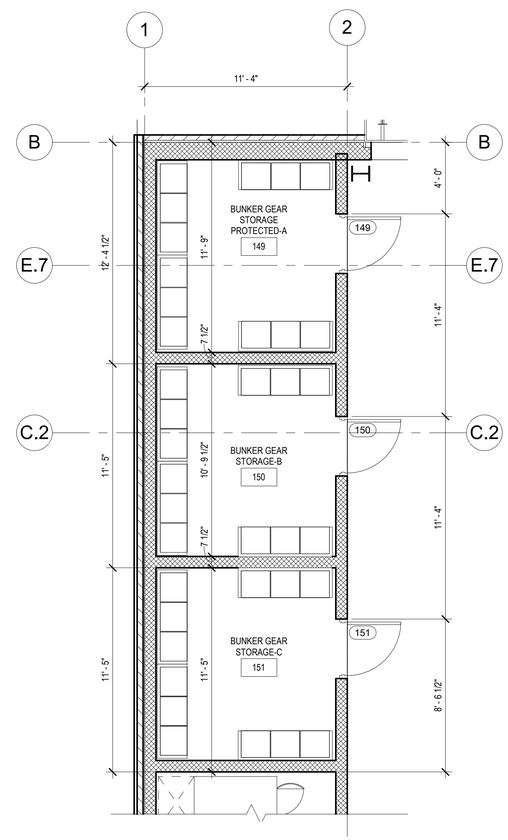

2 BUNKER GEAR STORAGE

1/4" = 1'-0"

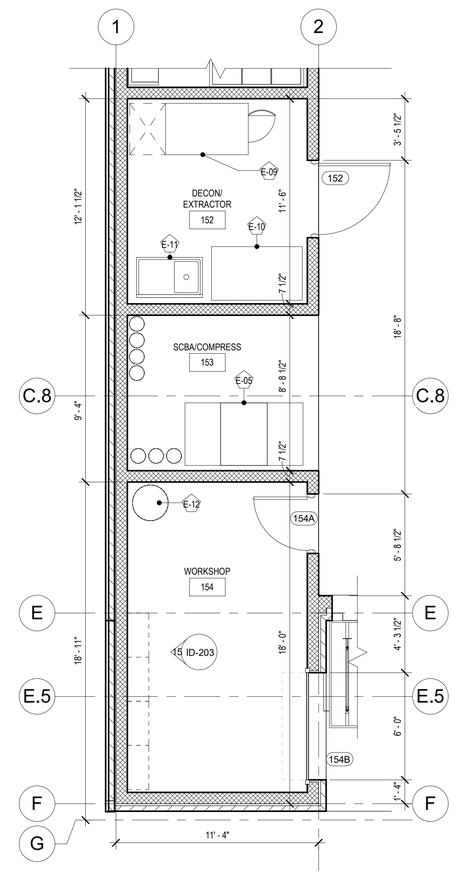

1 DECON / EXTRACTOR, SCBA / COMPRESS, WORKSHOP

1/4" = 1'-0"

Architects Design Group

Architects and Planners

I.S.K. Reeves V, F.A.I.A.
Ian A. Reeves, A.I.A.
Susan Gantt A.I.A., LEED-AP

333 N. Knowles Ave.
Winter Park, Florida 32789
(407) 647-1706

Corporate Registration Number: BR1177

REGISTERED ARCHITECT IAN A. REEVES 22797 STATE OF TEXAS

06.05.2020

FIRE STATION NO.5

CITY OF LONGVIEW

100% BID SET

The architect hereby expressly reserves his common law copyright and other property rights in these drawings. These drawings shall not be reproduced without written permission and consent of the architect, nor are they to be assigned to any party without first obtaining written permission and consent.

REVISIONS/ADDENDA

Number	Description	Date Issued

SHEET TITLE:

ENLARGED PLANS

scale: 1/4" = 1'-0"
drawn: ADG DALLAS
checked: SB/MBV
approved: IAR
date: June 5, 2020

PROJECT NUMBER:

1006

SHEET NUMBER:

A-132

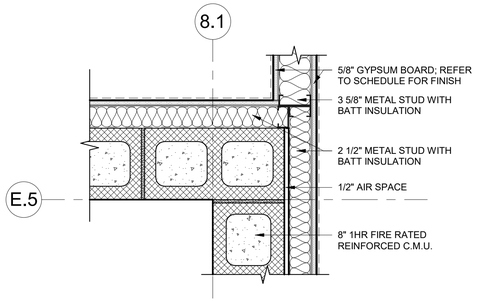

1 PLAN DETAIL 1

1 1/2" = 1'-0"

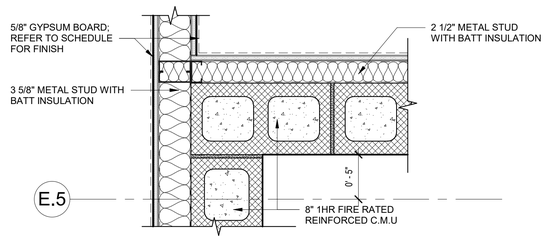

2 PLAN DETAIL 2

1 1/2" = 1'-0"

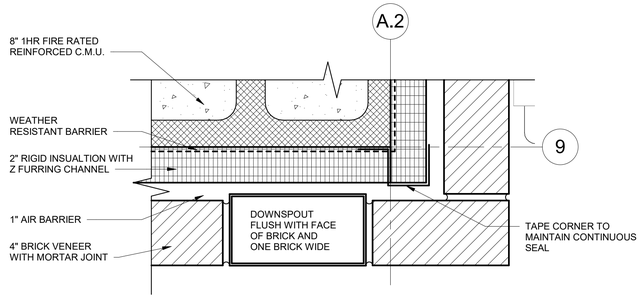

3 PLAN DTL - DOWNSPOUT

3" = 1'-0"

Architects Design Group

Architects and Planners

I.S.K. Reeves V, F.A.I.A.
Ian A. Reeves, A.I.A.
Susan Gantt A.I.A., LEED-AP

333 N. Knowles Ave.
Winter Park, Florida 32789
(407) 647-1706

Corporate Registration
Number: BR1177

REGISTERED ARCHITECT
IAN A. REEVES
22797
STATE OF TEXAS
06.05.2020

FIRE STATION NO.5

CITY OF LONGVIEW

100% BID SET

The architect hereby expressly reserves his common law copyright and other property rights in these drawings. These drawings shall not be reproduced without written permission and consent of the architect, nor are they to be assigned to any party without first obtaining written permission and consent.

REVISIONS/ADDENDA

Number	Description	Date Issued

SHEET TITLE:

PLAN DETAILS & SECTIONS

scale: As indicated
drawn: ADG DALLAS
checked: SB/MBV
approved: IAR
date: June 5, 2020

PROJECT NUMBER:

1006

SHEET NUMBER:

A-141

SPECIALTY EQUIPMENT

MARK	COUNT	RESPONSIBILITY	DESCRIPTION	ALTERNATE	MANUFACTURER	BASIS OF DESIGN	REQUIREMENTS
E-01	2	CPCI	PAIR WASHER AND DRYER - FRONT LOAD		SPEED QUEEN	SPEED QUEEN WASHER MOD. FF7005WN AND DRYER MOD. DF7000NE	POWER AND WATER CONNECTIONS REQUIRED
E-02	1	CPCI	SRT486C		Wolf	5610121	GAS REQUIRED
E-03	2	CPCI	ADA DISHWASHER, 24", STAINLESS STEEL		BOSCH APPLIANCES	BOSCH, 800 SERIES MOD. SPX68U55UC	POWER AND WATER CONNECTION REQUIRED
E-04	1	CPCI	ICE MACHINE		KOLD- DRAFT	MOD. T560	POWER, WATER, AND DRAIN CONNECTION REQUIRED
E-05	1	OPOI	S.C.B.A COMPRESSOR - 480V	ALT #1	MAKO	BAM GENERAL ARRANGEMENT - TBD	
E-06	2	OPOI	STACKED RADIO CHARGING		Spacesaver Corp	TBD	RELOCATED
E-07	1	OPOI	SMALL REFRIGERATOR		GE		RELOCATED
E-09	1	OPOI	RIGID MOUNT WASHER - EXTRACTOR 60LBS CAPACITY	ALT #1	PELLERIN MILNOR CORP.	MILNOR 30022 T6X	POWER, WATER, AND DRAIN CONNECTION REQUIRED
E-10	1	OPOI	TURNOUT GEAR DRYER CABINET	ALT #1	PELLERIN MILNOR CORP.	GEAR GUARDIAN DRYING CABINET FC-6	POWER REQUIRED
E-11	1	CPCI	STAINLESS STEEL, ONE BOWL,COMPARTMENT SINK W/DRAIN BOARD		AERO Manufacturing	MF1-2116-24R	
E-12	1	CPCI	MAINTENANCE SHOP AIR COMPRESSOR - 480V	ALT #1	NORTHEN TOOL	NORTHERN TOOL + EQUIPMENT PUMBA BELT DRIVE STATIONARY AIR COMPRESSOR 60 GALLON VERTICAL 3 HP, 12 CFM #PK6060V	W/ VIBRATION ISOLATOR 3/8"X50" DBL. ARM RETRACTING AIR HOSE REEL-POWER REQUIRED
E-13	2	OPOI	ELLIPTICAL		LIFEFITNESS	LIFEFITNESS	POWER REQUIRED
E-14	13	CPCI	BUNKER GEAR STORAGE 3 - 20" COMPARTMENTS		RED RACK	RED RACK RMSS-3/20	RELOCATED
E-15	1	CPCI	COUNTER TOP FLAT GRILL		WOLF	WOLF GRIDDLE AGM24	GAS REQUIRED
E-16	1	CPCI	CEILING-MOUNTED POT RACK		Eagle Group	CMXXXPR	
E-18	2	OPOI	TREADMILL		N/A	NORDIC TRACK COMMERCIAL 1750	POWER REQUIRED
E-19	6	OPOI	4 POST, STAINLESS STEEL ADJUSTABLE SHELVES		ULINE	ULINE, H-2940-63, 36"X18"X6', (4) SHELVES TYPICAL	
E-20	3	CPCI	FRENCH DOOR REFRIGERATOR / FREEZER, ENERGY STAR 27.8 CU.FT. SIDE BYSIDE		GE	GE PROFILE , MOD. PFE28KSKSS	POWER AND WATER CONNECTION REQUIRED
E-21	6	OPOI	STAINLESS STEEL ADJUSTABLE SHELVES		THE SHELVING STORE	THE SHELVING STORE, 18"W x18" DEEP	
E-22	1	CPCI	STAINLESS STEEL PROPANE/NATURAL GAS GRILL		NAPOLEON	NAPOLEON MOD. LEX485RSIB	NATURAL GAS REQUIRED
E-23	1	CPCI	30" DOUBLE WALL, ELECTRIC OVEN, STAINLESS STEEL		BOSCH APPLIANCES	SERIES 500, MOD. HBL5551UC	POWER REQUIRED
E-24	2	OPOI	STAINLESS STEEL, 24" DRAWER MICROWAVE		BOSCH	MOD. HMD8451UC	POWER REQUIRED
E-25	2	OPOI	FREEWEIGHT DUMBELL STATION		N/A	ROGUE UNIVERSAL STORAGE SYSTEM	
E-26	2	OPOI	4 POST, STAINLESS STEEL ADJUSTABLE SHELVES		ULINE	ULINE, H-2941-63, 48"X18"X6', (4) SHELVES TYPICAL	
E-27	5	OPOI	COMPUTER WORKSTATION		TBD		COORDINATE LOCATION OF CABLE GROMMET IN COUNTER
E-28	2	OPOI	FLAT SCREEN TV		TBD	65"	POWER AND DATA REQUIRED
E-29	1	CPCI	WHITEBOARDSCREEN THIN EDGE PROJECTOR SCREEN AND DRY-ERASE BOARD		ELITE SCREENS	WB90XW1	
E-30	3	OPOI	FLAT SCREEN TV		TBD	42"	POWER AND DATA REQUIRED
E-31	6	CPCI	FRAMELESS MIRROR		BRADLEY	747-60" W x 54" H	
E-32	2	CPCI	FRAMELESS MIRROR		BRADLEY	747-48" W x 54" H	
E-33	1	OPOI	12 CUP COFFEE BREWER WITH 3 LOWER WARMERS		BUNN	BUNN 12950.0212 CWTF15-3	POWER AND WATER CONNECTION REQUIRED
E-34	1	OPOI	4 SLICE TOASTER		WARING	WCT805B HEAVY DUTY 4 SLICE TOASTER 208V	POWER REQUIRED
E-35	2	OPOI	DIGITAL MARKER BOARD		SMART BOARD	MX265-V2	POWER REQUIRED, SEE TECHNOLOGY DRAWINGS
E-36	12	OPOI	CLOTHING HOOK - BRIGHT CHROME FINISH		Bradley Corporation	9119	
E-38	1	OPOI	WALL MOUNTED ENCLOSURE		RACKMOUNT SOLUTIONS		
E-39	1	OPCI	SURFACE-MOUNTED MOP AND BROOM HOLDER		BOBRICK	B-223 x 24	http://www.bobrick.com/Pages/default.aspx

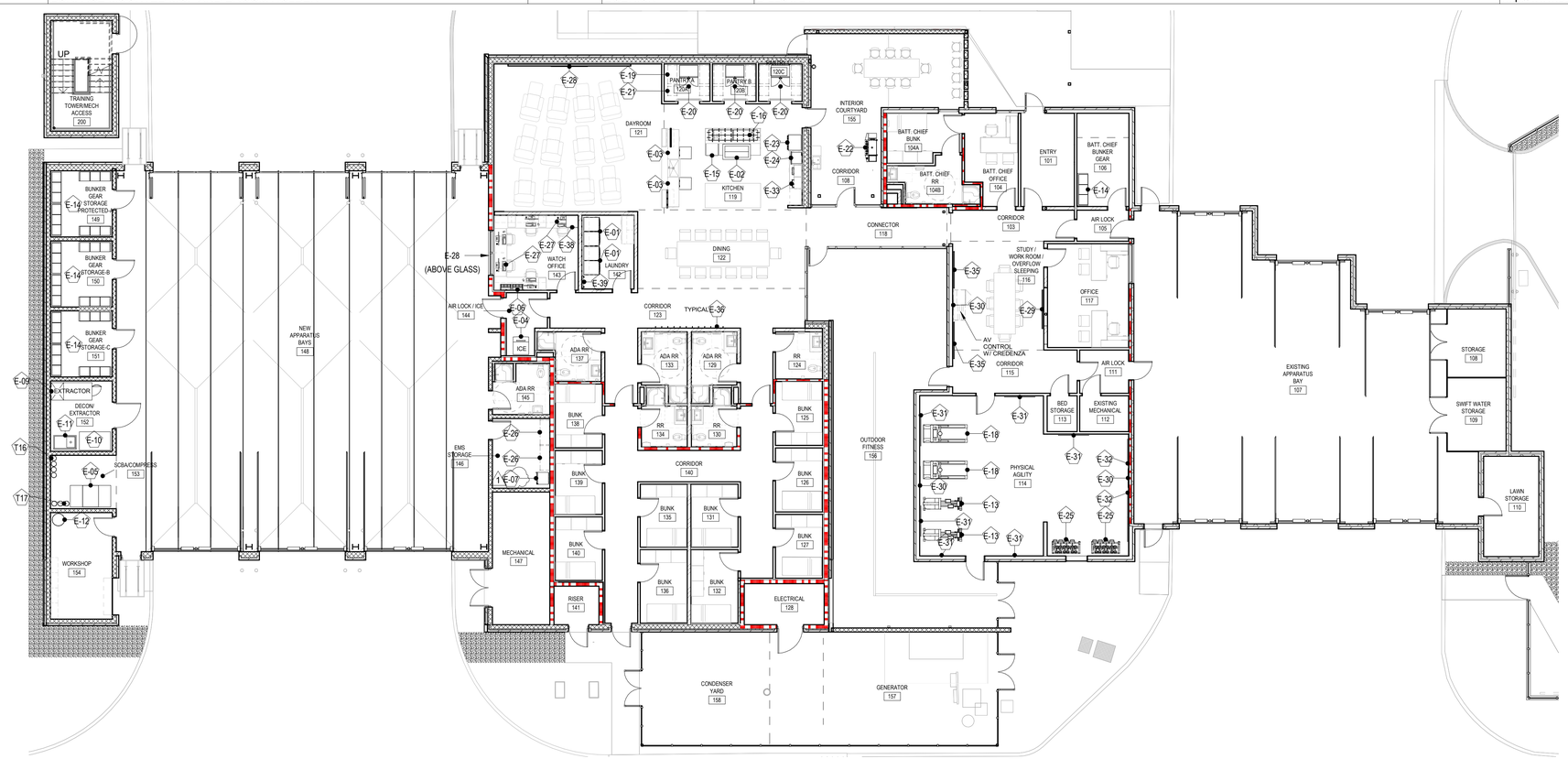

FURNITURE & EQUIPMENT PLAN - FURNITURE NOT IN CONTRACT

1

3/32" = 1'-0"

KEY PLAN

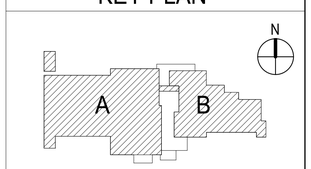

Architects Design Group

Architects and Planners

I.S.K. Reeves V, F.A.I.A.
Ian A. Reeves, A.I.A.
Susan Gantt A.I.A., LEED-AP

333 N. Knowles Ave.
Winter Park, Florida 32789
(407) 647-1706

Corporate Registration Number: BR1177

REGISTERED ARCHITECT IAN A. REEVES 22797 STATE OF TEXAS

06.05.2020

FIRE STATION NO.5

CITY OF LONGVIEW

100% BID SET

The architect hereby expressly reserves his common law copyright and other property rights in these drawings. These drawings shall not be reproduced without written permission and consent of the architect, nor are they to be assigned to any party without first obtaining written permission and consent.

REVISIONS/ADDENDA

Number	Description	Date Issued
1	Revision 1	Date 1

SHEET TITLE:

FURNITURE & EQUIPMENT PLANS + SCHEDULE

scale: 3/32" = 1'-0"
drawn: ADG DALLAS
checked: SB/MBV
approved: IAR
date: June 5, 2020

PROJECT NUMBER:

1006

SHEET NUMBER:

A-151

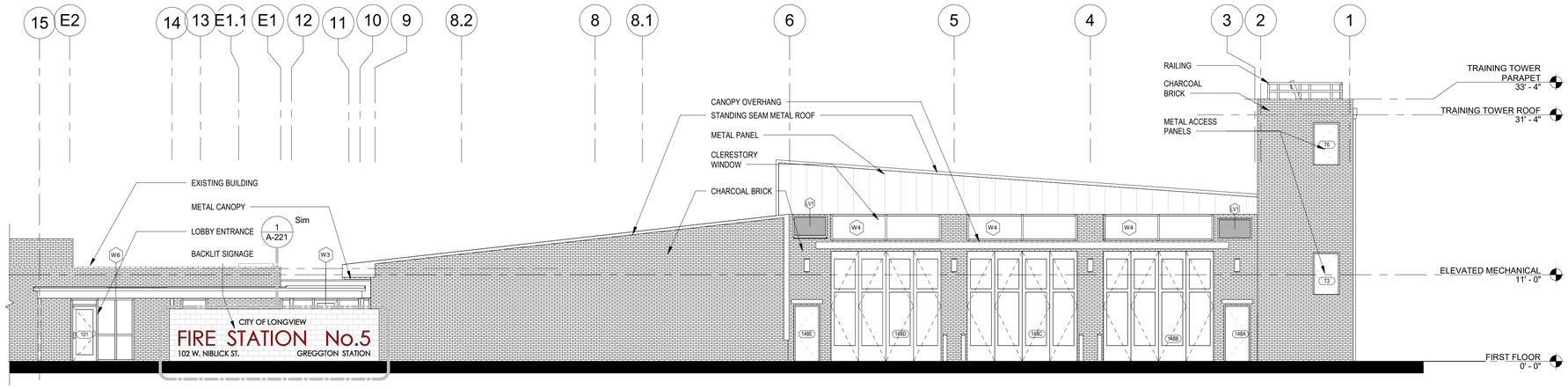

2 NORTH EXTERIOR ELEVATION

1/8" = 1'-0"

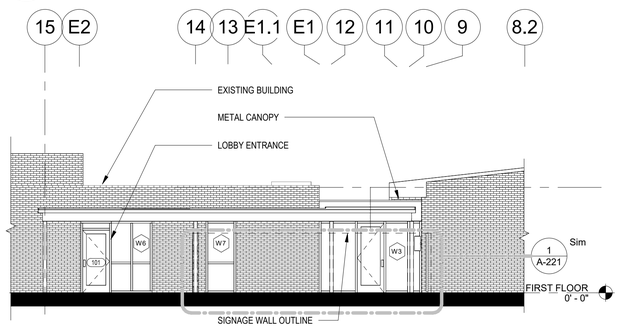

3 PARTIAL NORTH EXTERIOR ELEVATION

1/8" = 1'-0"

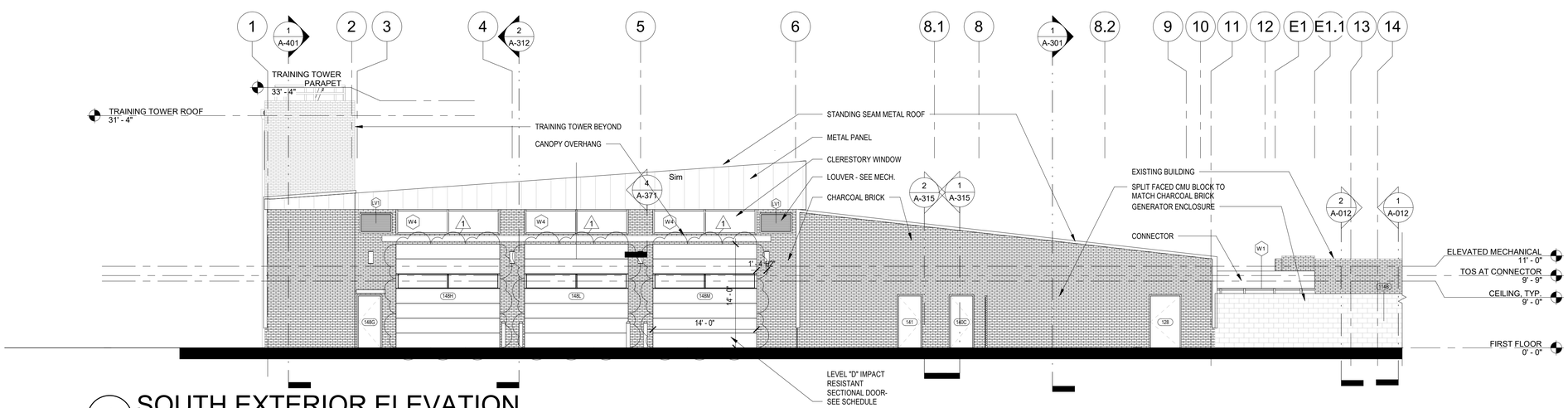

1 SOUTH EXTERIOR ELEVATION

1/8" = 1'-0"

Architects Design Group

Architects and Planners

I.S.K. Reeves V, F.A.I.A.
Ian A. Reeves, A.I.A.
Susan Gantt A.I.A., LEED-AP

333 N. Knowles Ave.
Winter Park, Florida 32789
(407) 647-1706

Corporate Registration Number: BR1177

REGISTERED ARCHITECT IAN A. REEVES 22797 STATE OF TEXAS

06.05.2020

FIRE STATION NO.5

CITY OF LONGVIEW

100% BID SET

The architect hereby expressly reserves his common law copyright and other property rights in these drawings. These drawings shall not be reproduced without written permission and consent of the architect, nor are they to be assigned to any party without first obtaining written permission and consent.

REVISIONS/ADDENDA

Number	Description	Date Issued
1	Revision 1	Date 1

SHEET TITLE:

EXTERIOR ELEVATIONS

scale: 1/8" = 1'-0"
drawn: ADG DALLAS
checked: SB/MBV
approved: IAR
date: June 5, 2020

PROJECT NUMBER:

1006

SHEET NUMBER:

A-201 A

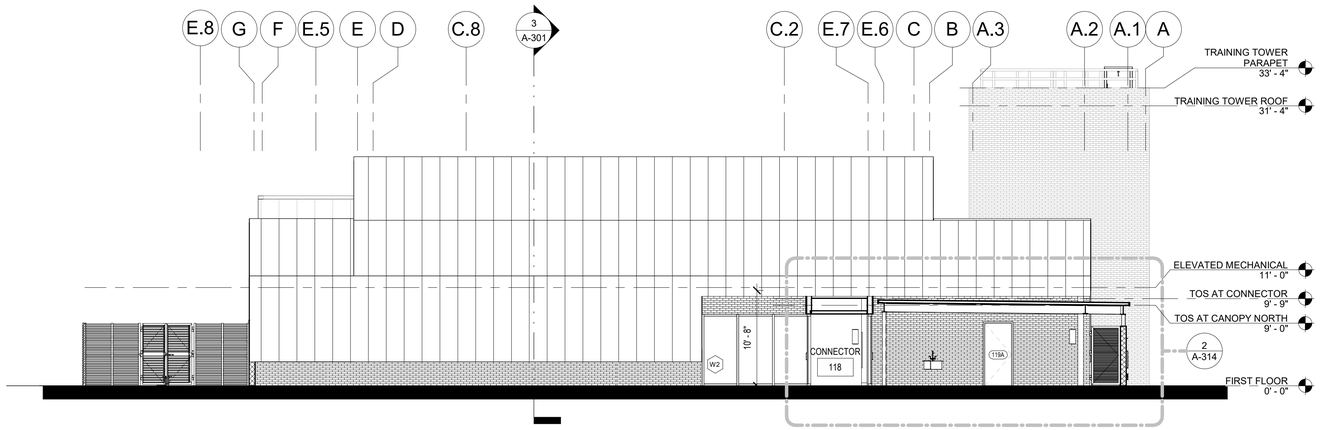

2 EAST EXTERIOR ELEVATION

1/8" = 1'-0"

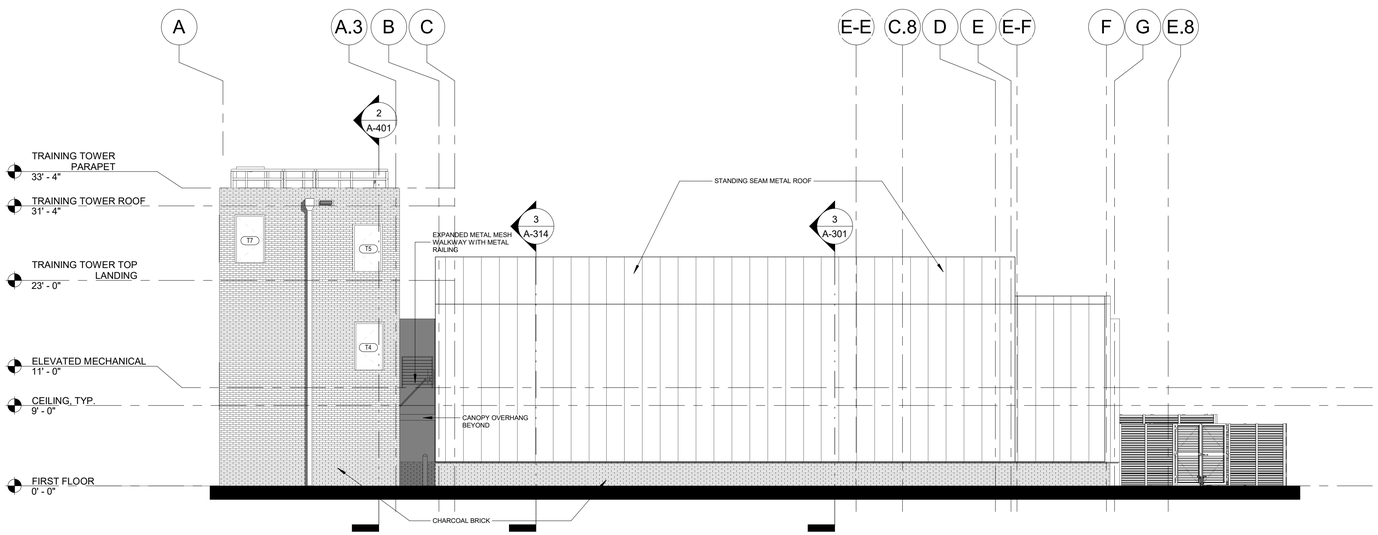

1 WEST EXTERIOR ELEVATION

1/8" = 1'-0"

Architects Design Group

Architects and Planners

I.S.K. Reeves V, F.A.I.A.
Ian A. Reeves, A.I.A.
Susan Gantt A.I.A., LEED-AP

333 N. Knowles Ave.
Winter Park, Florida 32789
(407) 647-1706

Corporate Registration
Number: BR1177

REGISTERED ARCHITECT
IAN A. REEVES
22797
STATE OF TEXAS

06.05.2020

FIRE STATION NO.5

CITY OF LONGVIEW

100% BID SET

The architect hereby expressly reserves his common law copyright and other property rights in these drawings. These drawings shall not be reproduced without written permission and consent of the architect, nor are they to be assigned to any party without first obtaining written permission and consent.

REVISIONS/ADDENDA

Number	Description	Date Issued

SHEET TITLE:

EXTERIOR ELEVATIONS

scale: 1/8" = 1'-0"
drawn: Author
checked: Checker
approved: Approver
date: June 5, 2020

PROJECT NUMBER:

1006

SHEET NUMBER:

A-201 B

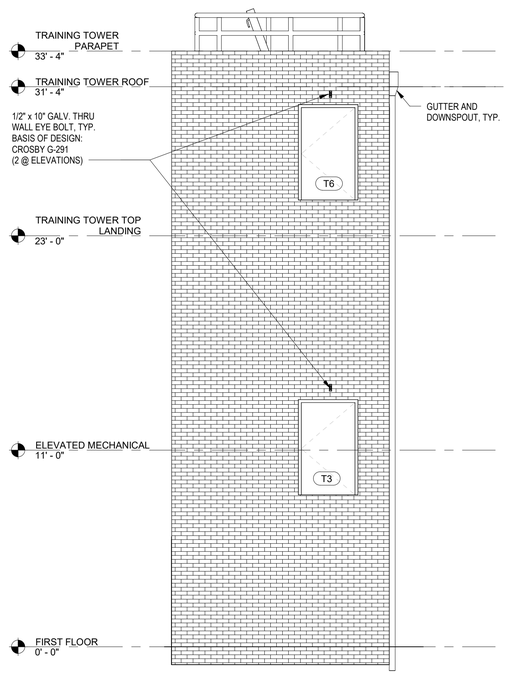

4 TOWER NORTH
1/4" = 1'-0"

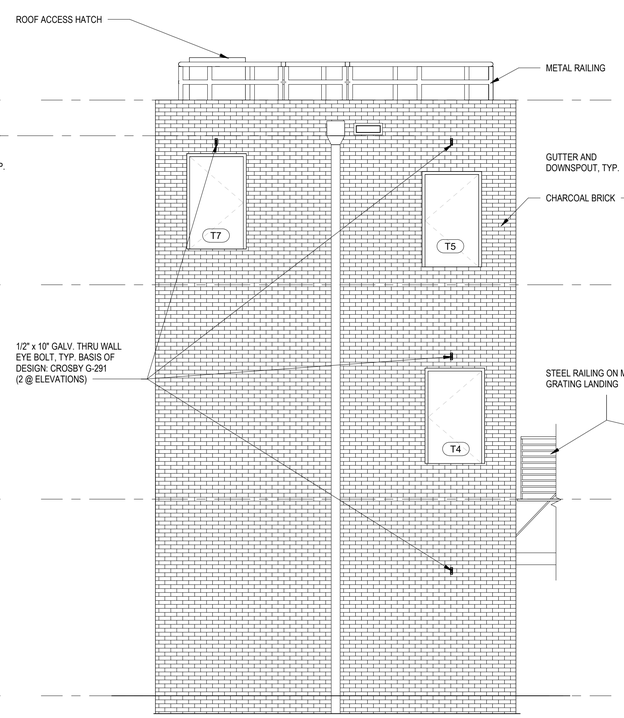

3 TOWER WEST
1/4" = 1'-0"

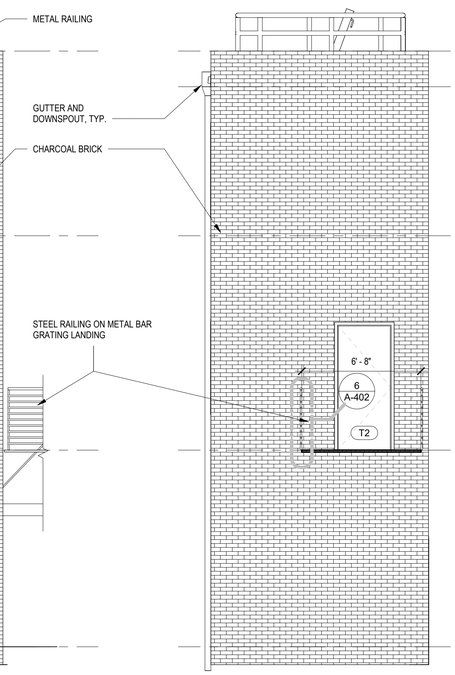

2 TOWER SOUTH
1/4" = 1'-0"

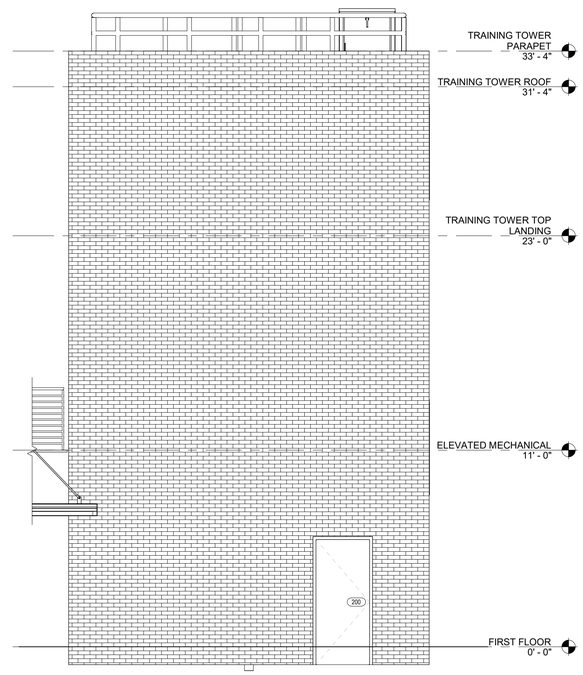

1 TOWER EAST
1/4" = 1'-0"

Architects Design Group

Architects and Planners

I.S.K. Reeves V, F.A.I.A.
Ian A. Reeves, A.I.A.
Susan Gantt A.I.A., LEED-AP

333 N. Knowles Ave.
Winter Park, Florida 32789
(407) 647-1706

Corporate Registration
Number: BR1177

REGISTERED ARCHITECT
IAN A. REEVES
22797
STATE OF TEXAS
06.05.2020

FIRE STATION NO.5

CITY OF LONGVIEW

100% BID SET

The architect hereby expressly reserves his common law copyright and other property rights in these drawings. These drawings shall not be reproduced without written permission and consent of the architect, nor are they to be assigned to any party without first obtaining written permission and consent.

REVISIONS/ADDENDA

Number	Description	Date Issued

SHEET TITLE:

TRAINING TOWER ELEVATIONS

scale: 1/4" = 1'-0"
drawn: ADG DALLAS
checked: SB/MBV
approved: IAR
date: June 5, 2020
PROJECT NUMBER:
1006
SHEET NUMBER:
A-202

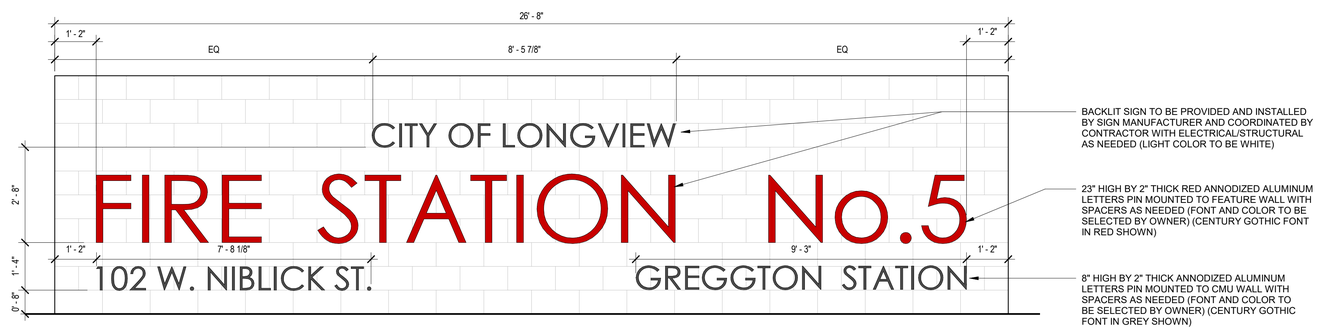

1 SIGNAGE AT NORTH ELEVATION
1/2" = 1'-0"

Architects Design Group

Architects and Planners

I.S.K. Reeves V, F.A.I.A.
Ian A. Reeves, A.I.A.
Susan Gantt A.I.A., LEED-AP

333 N. Knowles Ave.
Winter Park, Florida 32789
(407) 647-1706

Corporate Registration
Number: BR1177

REGISTERED ARCHITECT
IAN A. REEVES
22797
STATE OF TEXAS
06.05.2020

FIRE STATION NO.5

CITY OF LONGVIEW

100% BID SET

The architect hereby expressly reserves his common law copyright and other property rights in these drawings. These drawings shall not be reproduced without written permission and consent of the architect, nor are they to be assigned to any party without first obtaining written permission and consent.

REVISIONS/ADDENDA

Number	Description	Date Issued

SHEET TITLE:

EXTERIOR SIGNAGE

scale: 1/2" = 1'-0"
drawn: ADG DALLAS
checked: SB/MBV
approved: IAR
date: June 5, 2020

PROJECT NUMBER:

1006

SHEET NUMBER:

A-221

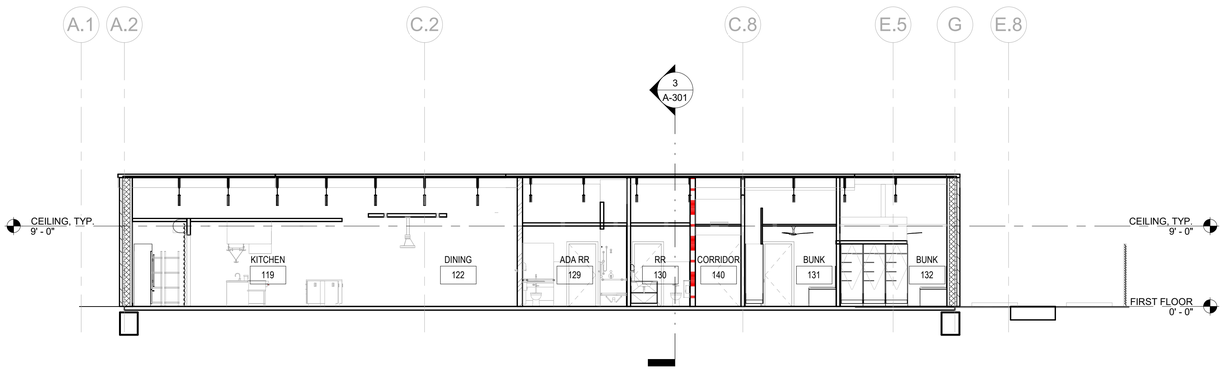

1 BUILDING SECTION - NORTH / SOUTH AT KITCHEN / BUNKS

1/8" = 1'-0"

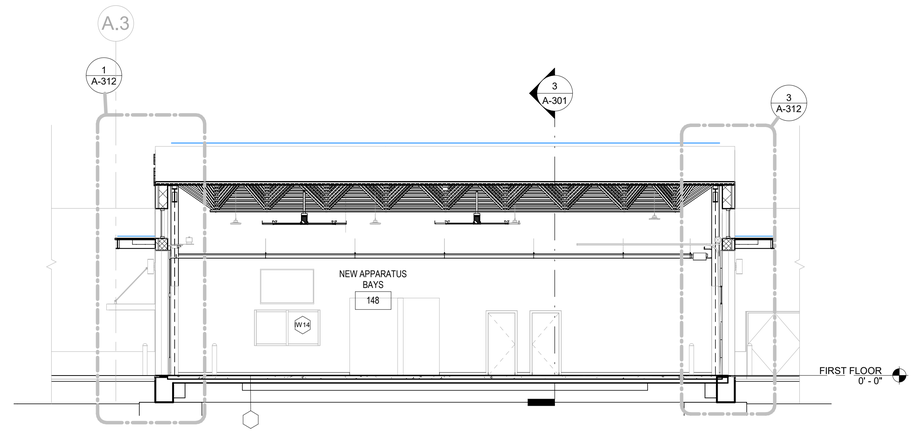

2 BUILDING SECTION - NORTH / SOUTH AT NEW APP BAYS

1/8" = 1'-0"

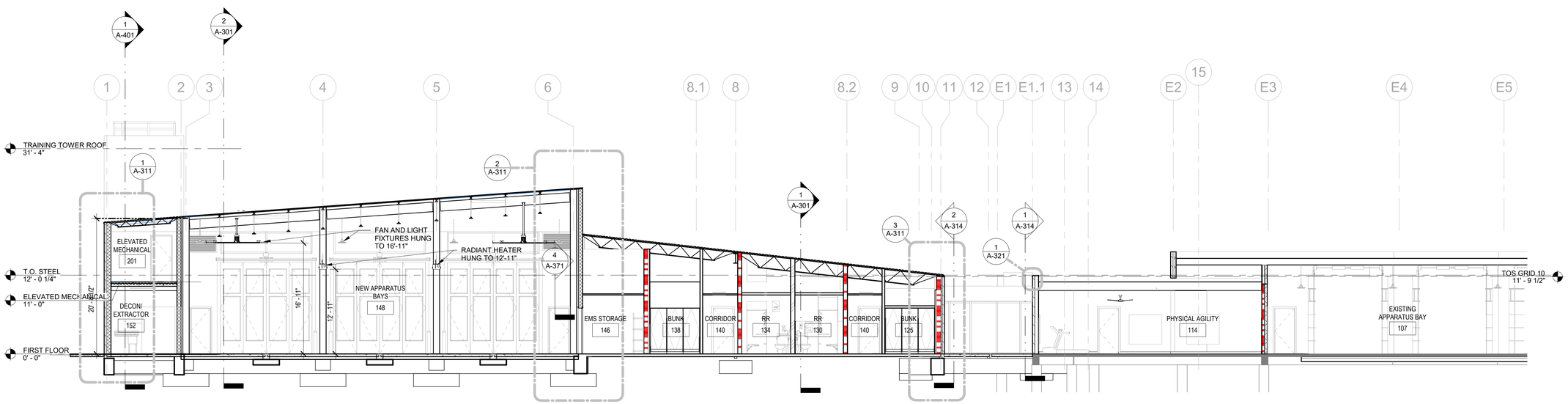

3 BUILDING SECTION - WEST / EAST LOOKING NORTH

1/8" = 1'-0"

Architects Design Group

Architects and Planners

I.S.K. Reeves V, F.A.I.A.
Ian A. Reeves, A.I.A.
Susan Gantt A.I.A., LEED-AP

333 N. Knowles Ave.
Winter Park, Florida 32789
(407) 647-1706

Corporate Registration
Number: BR1177

REGISTERED ARCHITECT
IAN A. REEVES
22797
STATE OF TEXAS

06.05.2020

FIRE STATION NO.5

CITY OF LONGVIEW

100% BID SET

The architect hereby expressly reserves his common law copyright and other property rights in these drawings. These drawings shall not be reproduced without written permission and consent of the architect, nor are they to be assigned to any party without first obtaining written permission and consent.

REVISIONS/ADDENDA

Number	Description	Date Issued

SHEET TITLE:

BUILDING SECTIONS

scale: 1/8" = 1'-0"
drawn: ADG DALLAS
checked: SB/MBV
approved: IAR
date: June 5, 2020

PROJECT NUMBER:

1006

SHEET NUMBER:

A-301

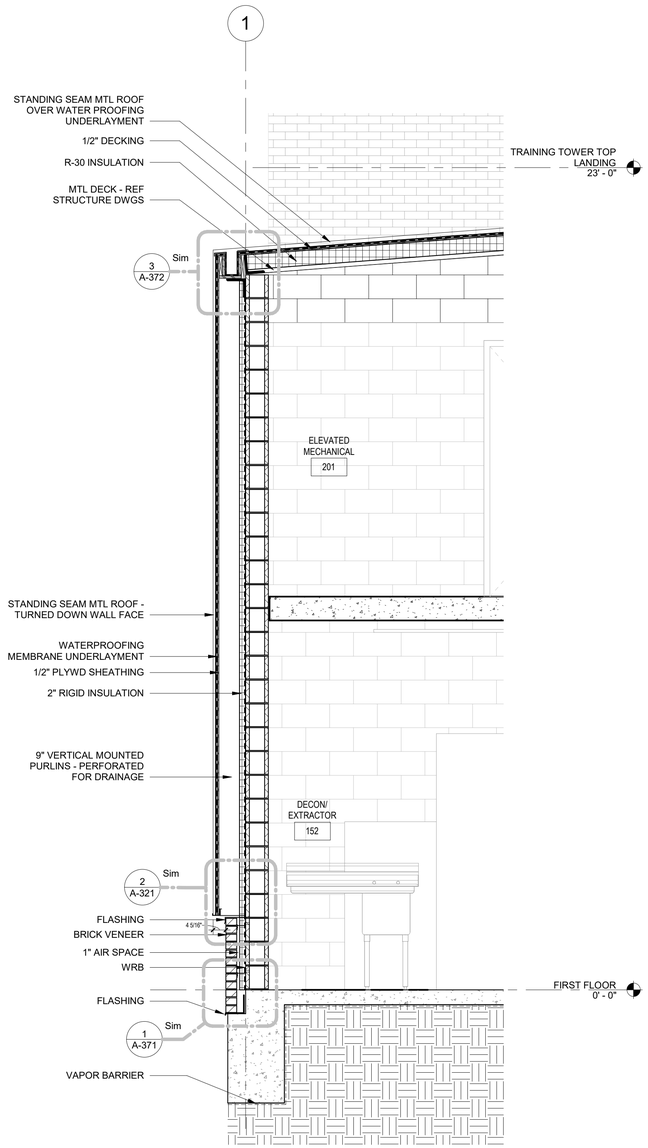

1 WALL SECTION @ APP BAY WEST WALL
1/2" = 1'-0"

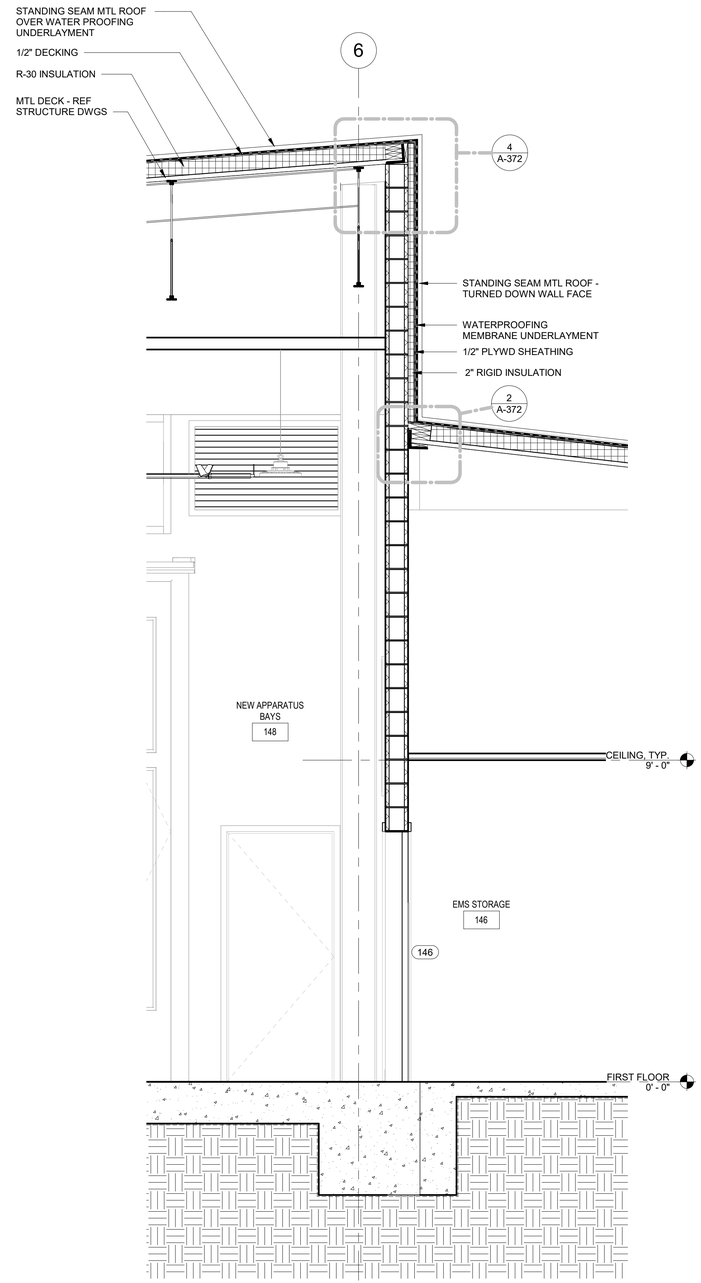

2 WALL SECTION @ APP BAY EAST WALL
1/2" = 1'-0"

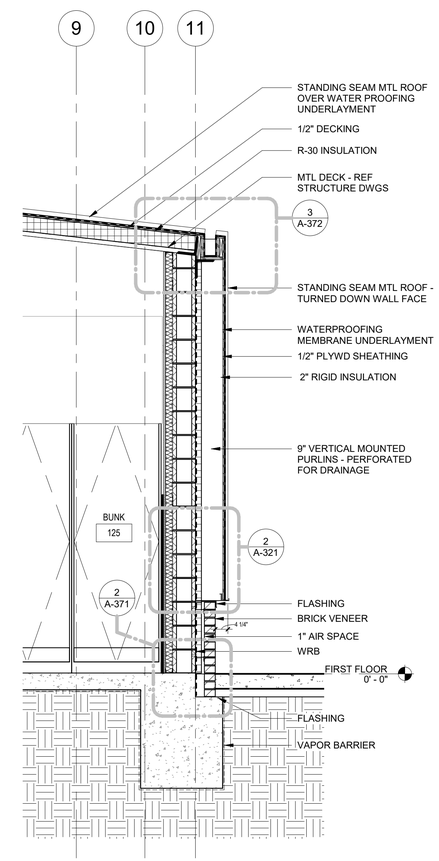

3 WALL SECTION @ BUNK / FITNESS
1/2" = 1'-0"

Architects Design Group

Architects and Planners

I.S.K. Reeves V, F.A.I.A.
Ian A. Reeves, A.I.A.
Susan Gantt A.I.A., LEED-AP

333 N. Knowles Ave.
Winter Park, Florida 32789
(407) 647-1706

Corporate Registration
Number: BR1177

REGISTERED ARCHITECT IAN A. REEVES 22797 STATE OF TEXAS
06.05.2020

FIRST STATION NO.5

CITY OF LONGVIEW

100% BID SET

The architect hereby expressly reserves his common law copyright and other property rights in these drawings. These drawings shall not be reproduced without written permission and consent of the architect, nor are they to be assigned to any party without first obtaining written permission and consent.

REVISIONS/ADDENDA

Number	Description	Date Issued

SHEET TITLE:

WALL SECTIONS

scale: 1/2" = 1'-0"
drawn: ADG DALLAS
checked: SB/MBV
approved: IAR
date: June 5, 2020

PROJECT NUMBER:

1006

SHEET NUMBER:

A-311

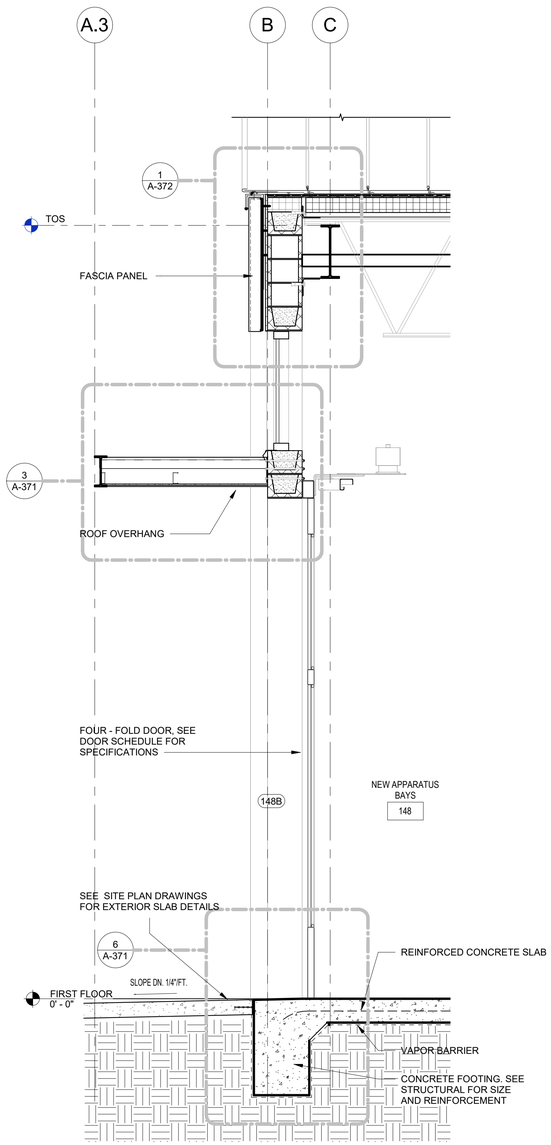

1 WALL SECTION @ APP BAY BIFOLD
1/2" = 1'-0"

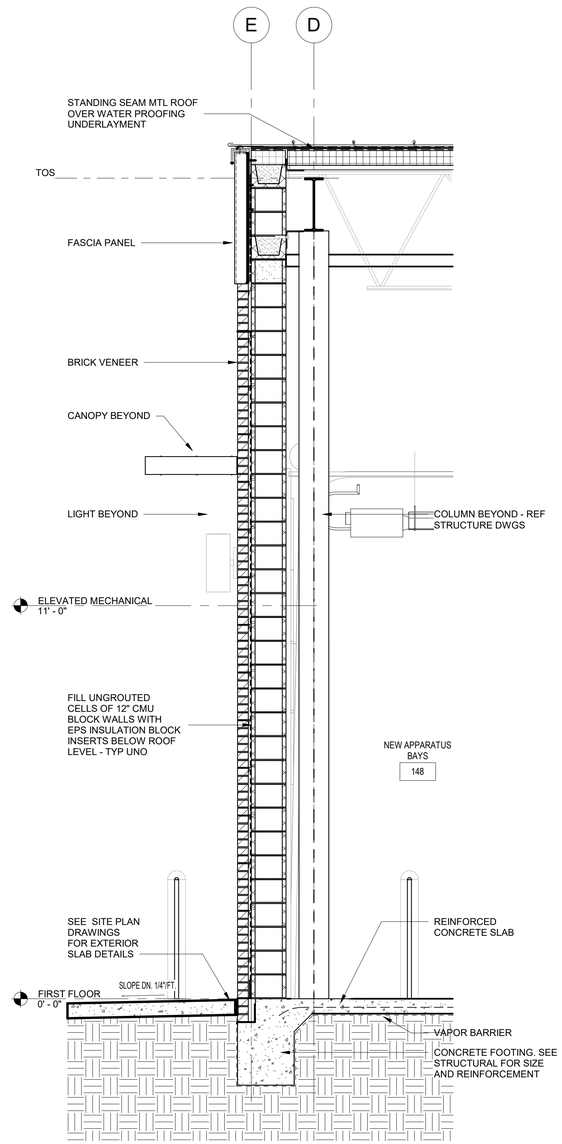

2 WALL SECTION @ APPARATUS BAY 2
1/2" = 1'-0"

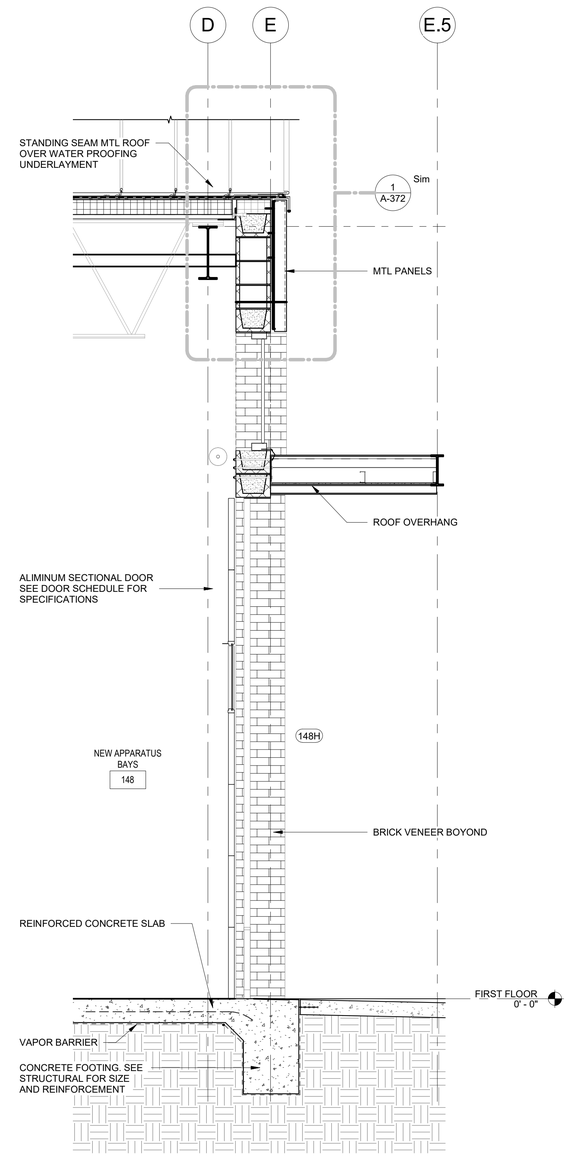

3 WALL SECTION @ APP BAY DOOR
1/2" = 1'-0"

Architects Design Group

Architects and Planners

I.S.K. Reeves V, F.A.I.A.
Ian A. Reeves, A.I.A.
Susan Gantt A.I.A., LEED-AP

333 N. Knowles Ave.
Winter Park, Florida 32789
(407) 647-1706

Corporate Registration
Number: BR1177

REGISTERED ARCHITECT
IAN A. REEVES
22797
STATE OF TEXAS
06.05.2020

FIRE STATION NO.5

CITY OF LONGVIEW

100% BID SET

The architect hereby expressly reserves his common law copyright and other property rights in these drawings. These drawings shall not be reproduced without written permission and consent of the architect, nor are they to be assigned to any party without first obtaining written permission and consent.

REVISIONS/ADDENDA

Number	Description	Date Issued

SHEET TITLE:

WALL SECTIONS

scale: 1/2" = 1'-0"
drawn: ADG DALLAS
checked: SB/MBV
approved: IAR
date: June 5, 2020
PROJECT NUMBER:
1006
SHEET NUMBER:
A-312

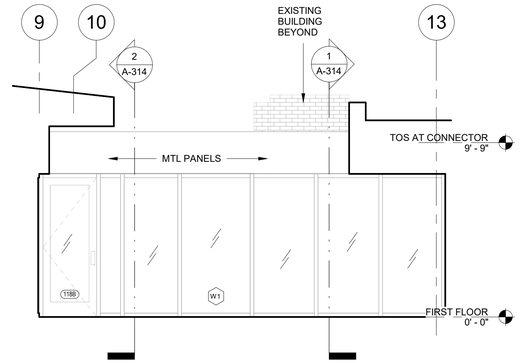

4 SOUTH ELEV - CONNECTOR
1/4" = 1'-0"

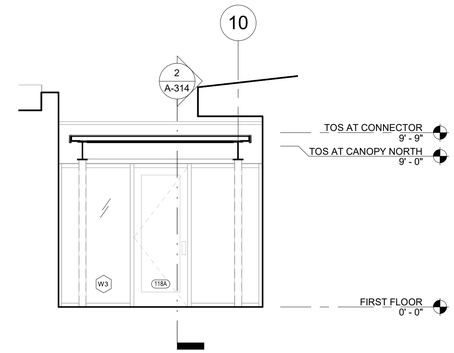

3 NORTH ELEV - CONNECTOR
1/4" = 1'-0"

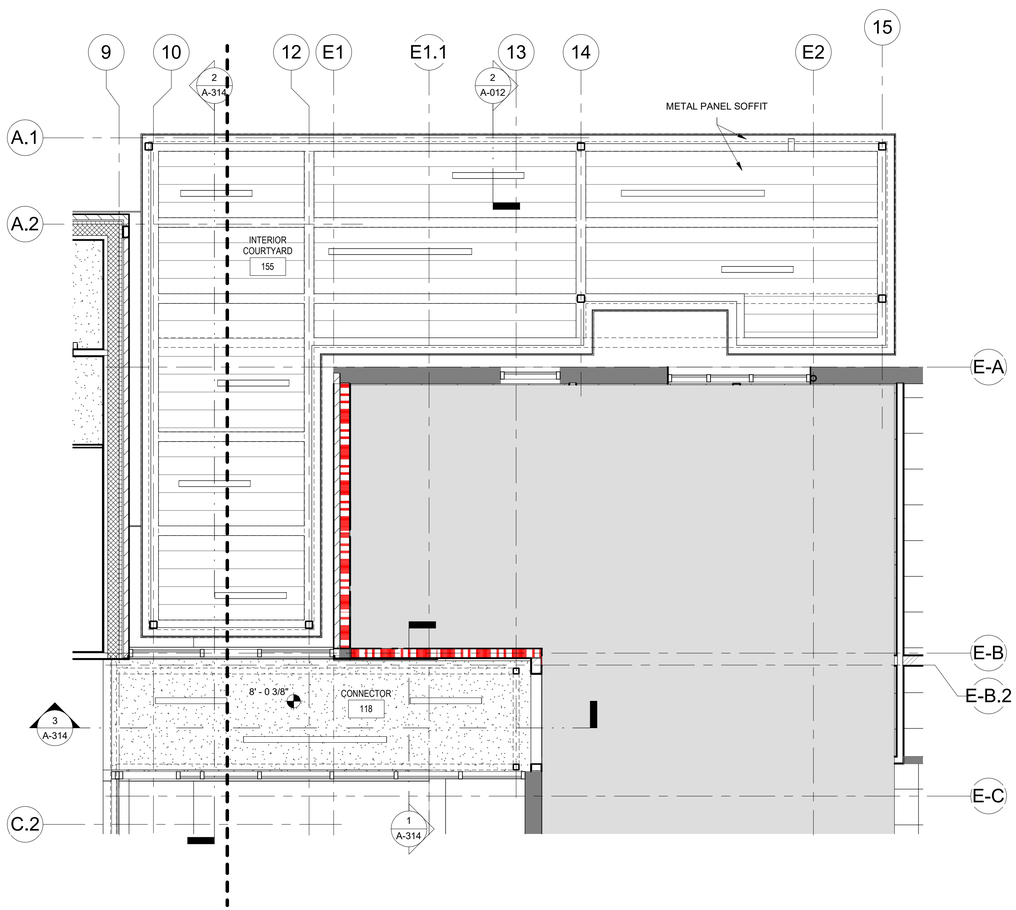

2 REFLECTED CEILING PLAN - CONNECTOR / CANOPY
1/4" = 1'-0"

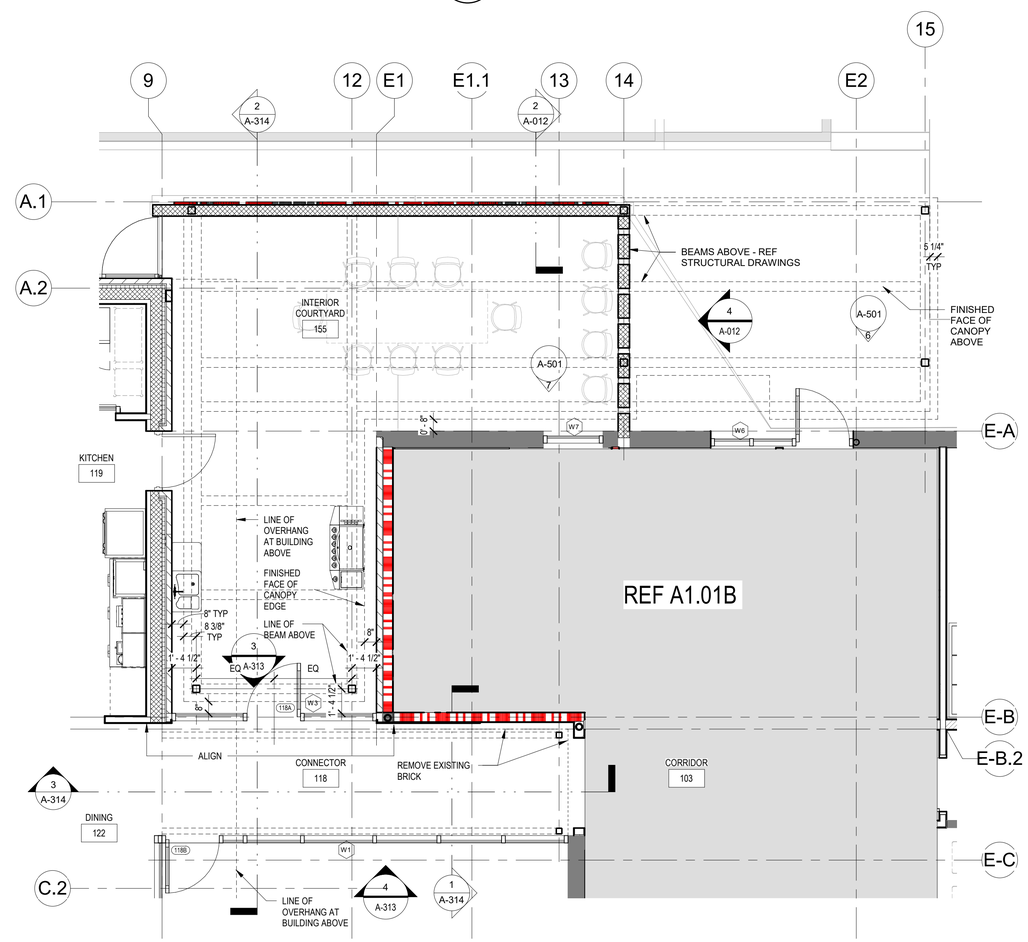

1 ENLARGED FLOOR PLAN - CONNECTOR / CANOPY
1/4" = 1'-0"

Architects Design Group

Architects and Planners

I.S.K. Reeves V, F.A.I.A.
Ian A. Reeves, A.I.A.
Susan Gantt A.I.A., LEED-AP

333 N. Knowles Ave.
Winter Park, Florida 32789
(407) 647-1706

Corporate Registration
Number: BR1177

REGISTERED ARCHITECT
IAN A. REEVES
22797
STATE OF TEXAS
06.05.2020

FIRE STATION NO.5

CITY OF LONGVIEW

100% BID SET

The architect hereby expressly reserves his common law copyright and other property rights in these drawings. These drawings shall not be reproduced without written permission and consent of the architect, nor are they to be assigned to any party without first obtaining written permission and consent.

REVISIONS/ADDENDA

Number	Description	Date Issued

SHEET TITLE:

ENLARGED PLAN - CONNECTOR / CANOPY

scale: 1/4" = 1'-0"
drawn: ADG DALLAS
checked: SB/MBV
approved: IAR
date: June 5, 2020

PROJECT NUMBER:

1006

SHEET NUMBER:

A-313

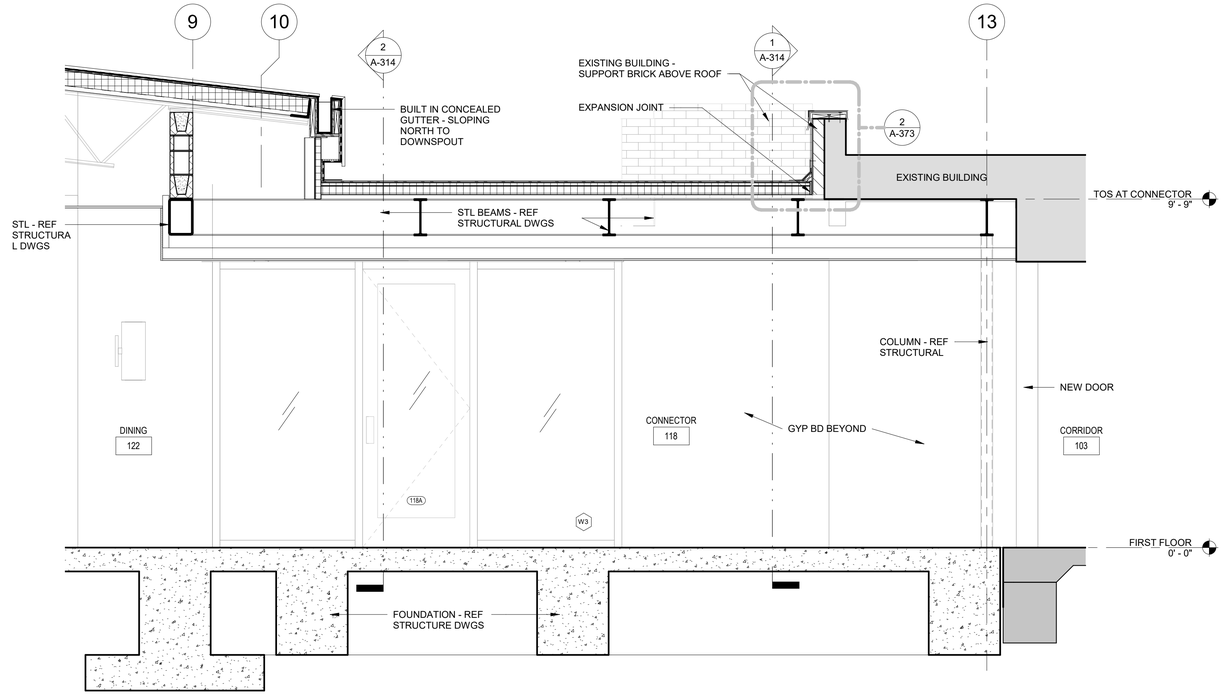

3 WALL SECTION AT CONNECTOR - WEST/EAST

1/2" = 1'-0"

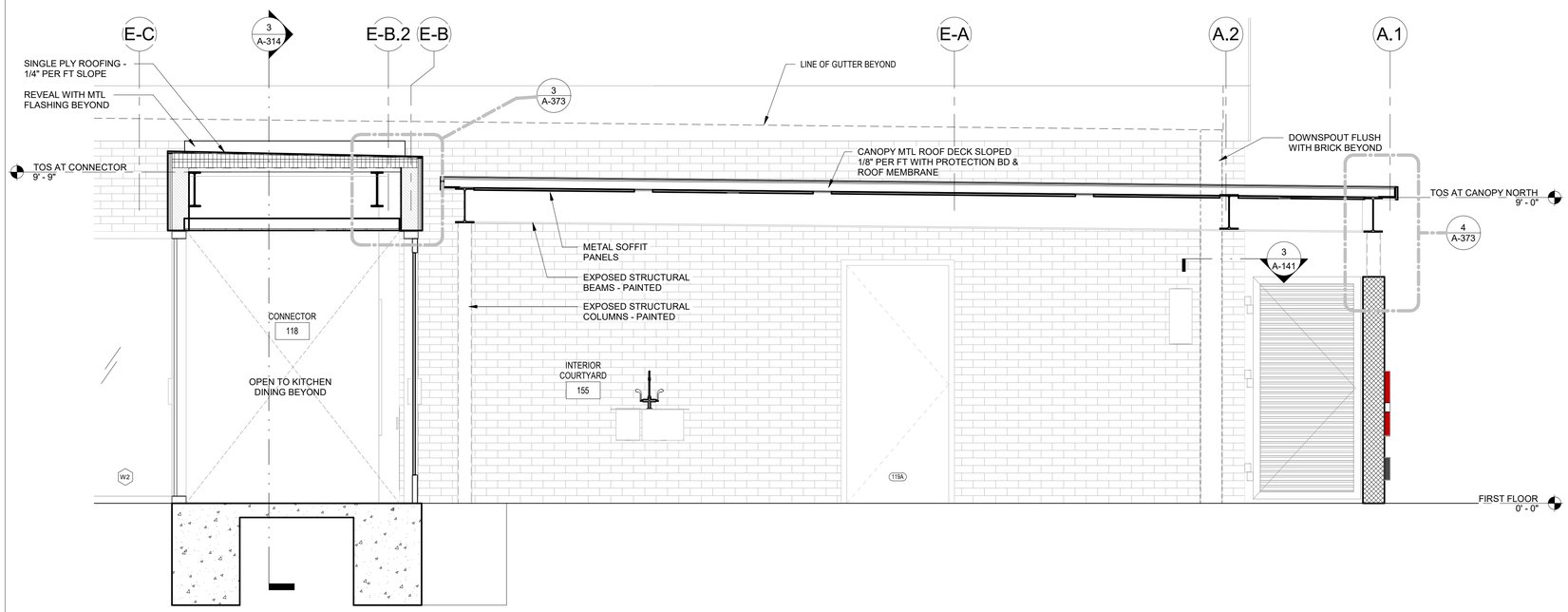

2 SECTION - CONNECTOR LOOKING WEST

1/2" = 1'-0"

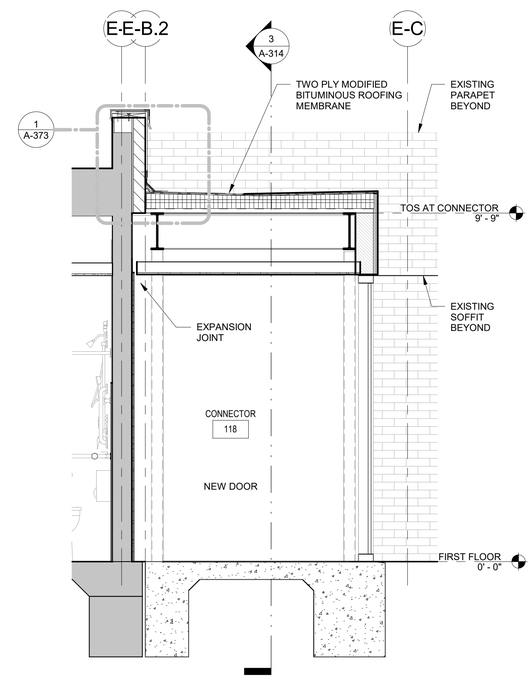

1 WALL SECTION AT CONNECTOR

1/2" = 1'-0"

Architects Design Group

Architects and Planners

I.S.K. Reeves V, F.A.I.A.
Ian A. Reeves, A.I.A.
Susan Gantt A.I.A., LEED-AP

333 N. Knowles Ave.
Winter Park, Florida 32789
(407) 647-1706

Corporate Registration Number: BR1177

REGISTERED ARCHITECT IAN A. REEVES 22797 STATE OF TEXAS

06.05.2020

FIRE STATION NO.5

CITY OF LONGVIEW

100% BID SET

The architect hereby expressly reserves his common law copyright and other property rights in these drawings. These drawings shall not be reproduced without written permission and consent of the architect, nor are they to be assigned to any party without first obtaining written permission and consent.

REVISIONS/ADDENDA

Number	Description	Date Issued

SHEET TITLE:

WALL SECTIONS - CONNECTOR

scale: 1/2" = 1'-0"
drawn: ADG DALLAS
checked: SB/MBV
approved: IAR
date: June 5, 2020

PROJECT NUMBER:

1006

SHEET NUMBER:

A-314

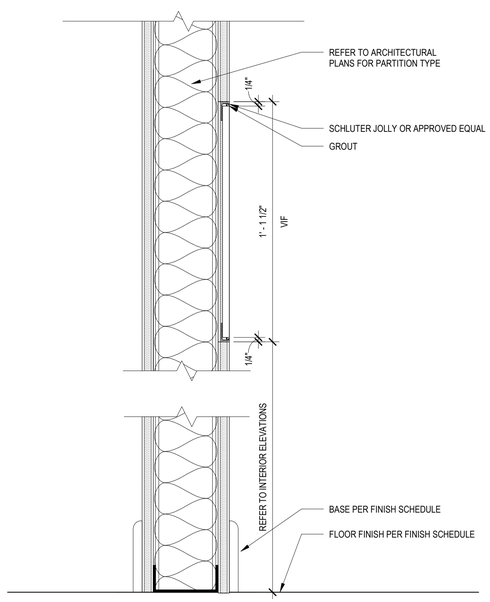

3 FLUSH TILE IN WALL DETAIL
3" = 1'-0"

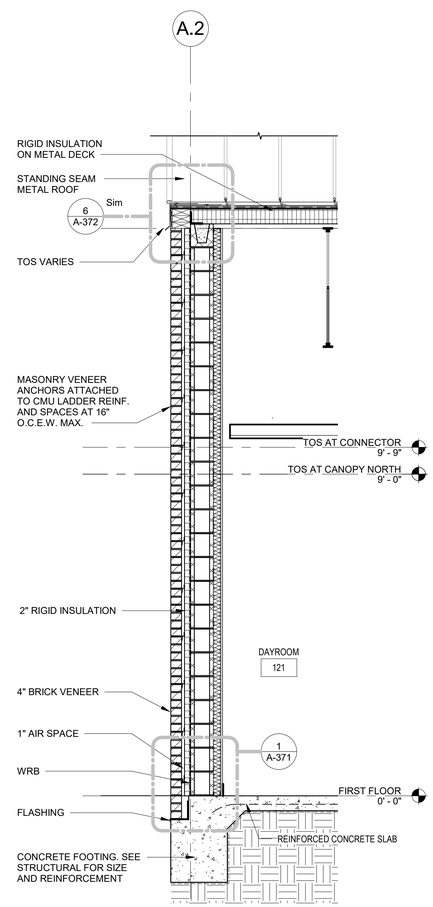

2 WALL SECTION @ DAYROOM & EXTERIOR
1/2" = 1'-0"

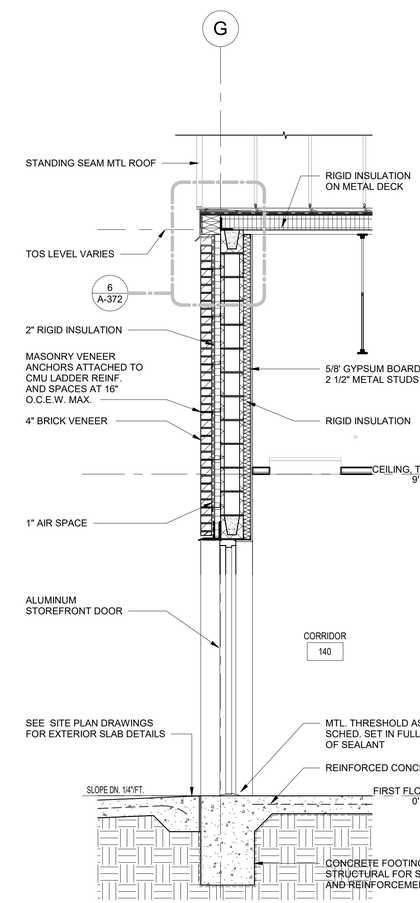

1 WALL SECTION @ CORRIDOR
1/2" = 1'-0"

Architects Design Group

Architects and Planners

I.S.K. Reeves V, F.A.I.A.
Ian A. Reeves, A.I.A.
Susan Gantt A.I.A., LEED-AP

333 N. Knowles Ave.
Winter Park, Florida 32789
(407) 647-1706

Corporate Registration
Number: BR1177

REGISTERED ARCHITECT
IAN A. REEVES
22797
STATE OF TEXAS
06.05.2020

FIRE STATION NO.5

CITY OF LONGVIEW

100% BID SET

The architect hereby expressly reserves his common law copyright and other property rights in these drawings. These drawings shall not be reproduced without written permission and consent of the architect, nor are they to be assigned to any party without first obtaining written permission and consent.

REVISIONS/ADDENDA

Number	Description	Date Issued

SHEET TITLE:
WALL SECTIONS

scale: As indicated
drawn: ADG DALLAS
checked: SB/MBV
approved: IAR
date: June 5, 2020
PROJECT NUMBER:
1006
SHEET NUMBER:
A-315

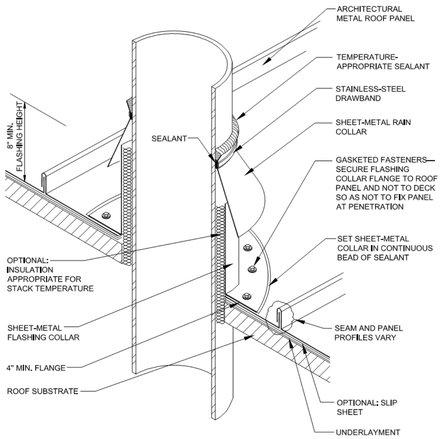

NOTES:

1. NRCA STRONGLY RECOMMENDS PENETRATIONS SHOULD NOT INTERFERE WITH PANEL SEAMS OR OCCUR AT TRANSVERSE SEAMS.
2. VENT STACKS AND OTHER PIPES SHOULD HAVE ADEQUATE CLEARANCE ON ALL SIDES FROM WALLS AND OTHER PROJECTIONS TO FACILITATE PROPER FLASHING AND PANEL DRAINAGE.
3. REFER TO THE INTRODUCTION OF THE CONSTRUCTION DETAILS CHAPTER FOR ADDITIONAL INFORMATION.

SHEET-METAL STACK VENT [HOT OR COLD]

2016 *NOT DRAWN TO SCALE* **AM-16**

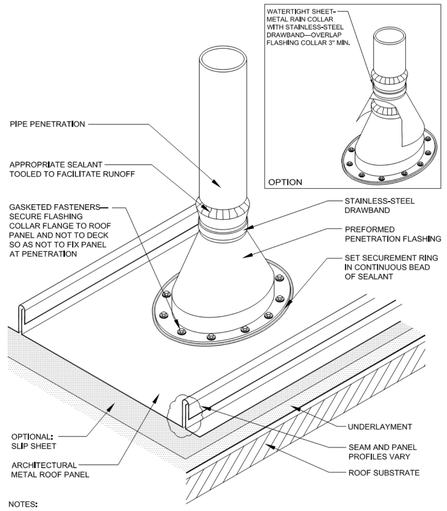

NOTES:

1. NRCA STRONGLY RECOMMENDS PENETRATIONS SHOULD NOT INTERFERE WITH PANEL SEAMS OR OCCUR AT TRANSVERSE SEAMS.
2. VENT STACKS AND OTHER PIPES SHOULD HAVE A MINIMUM 12 INCHES OF CLEARANCE ON ALL SIDES FROM WALLS, CURBS AND OTHER PROJECTIONS TO FACILITATE PROPER FLASHING.
3. FOR HOT PIPES, SPECIFIC HIGH-TEMPERATURE BOOTS SHOULD BE USED.
4. REFER TO THE INTRODUCTION OF THE CONSTRUCTION DETAILS CHAPTER FOR ADDITIONAL INFORMATION.

PIPE PENETRATION FLASHING

2016 *NOT DRAWN TO SCALE* **AM-15**

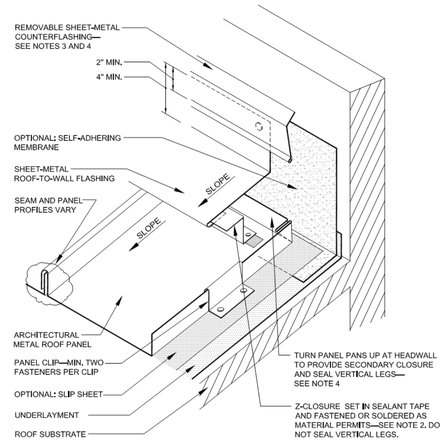

NOTES:

1. SPECIFIC FASTENING REQUIREMENTS ARE NOT INDICATED AS THEY VARY FROM SYSTEM TO SYSTEM DEPENDING ON PANEL MANUFACTURER'S REQUIREMENTS, WIND ZONE AND BUILDING CODE.
2. IF THE Z-CLOSURE IS FASTENED THROUGH THE ROOF DECK, THE PANELS ARE FIXED ALONG THE HEADWALL. IF THE Z-CLOSURE IS FASTENED TO THE PANELS WITH POP RIVETS OR SOLDERED, THE PANELS ARE NOT FIXED AT THE HEADWALL (I.E., FLOATING).
3. REFER TO THE ARCHITECTURAL METAL FLASHING SECTION OF THE NRCA ROOFING MANUAL: ARCHITECTURAL METAL FLASHING, CONDENSATION AND AIR LEAKAGE CONTROL, AND REROOFING FOR COUNTERFLASHING OPTIONS.
4. REFER TO THE INTRODUCTION OF THE CONSTRUCTION DETAILS CHAPTER FOR ADDITIONAL INFORMATION.

ROOF-TO-WALL (HEADWALL) TRANSITION

2016 *NOT DRAWN TO SCALE* **AM-10**

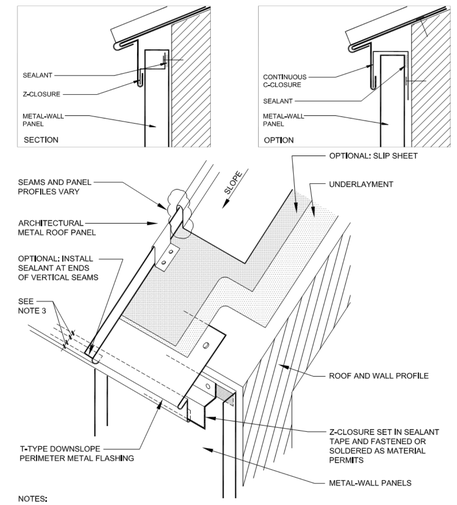

NOTES:

1. SPECIFIC FASTENING REQUIREMENTS ARE NOT INDICATED AS THEY VARY FROM SYSTEM TO SYSTEM DEPENDING ON PANEL MANUFACTURER'S REQUIREMENTS, WIND ZONE AND BUILDING CODE.
2. THIS DETAIL OF FLASHING FIXES THE WALL PANELS IF THE Z-CLOSURE IS FASTENED THROUGH THE WALL.
3. DIMENSIONS SHOULD ACCOMMODATE EXPECTED MOVEMENT. REFER TO SECTION 4.12 FOR INFORMATION ABOUT THERMAL MOVEMENT CONSIDERATIONS.
4. REFER TO THE INTRODUCTION OF THE CONSTRUCTION DETAILS CHAPTER FOR ADDITIONAL INFORMATION.

METAL-ROOF-TO-METAL-WALL TRANSITION

2016 *NOT DRAWN TO SCALE* **AM-20**

GENERAL NOTES

1. NRCA DETAILS SHOWN ARE GUIDELINES TO ESTABLISH MINIMUM STANDARD. ROOFING MANUFACTURER'S STANDARD DETAILS MAY BE USED IN ACCORDANCE WITH SPECIFICATIONS & IF APPROVED BY ARCHITECT THROUGH SUBMITTAL PROCESS AS SPECIFIED.
2. ALL WOOD NAILERS & BLOCKING USED AT ROOF SHALL BE PRESSURE TREATED WITH PRESERVATIVE THAT COMPLIES WITH SPECIFICATIONS & ROOFING MANUFACTURER'S RECOMMENDATIONS INCLUDING COMPATIBILITY WITH ROOFING SYSTEM. ALL FASTENERS THAT ARE IN CONTACT WITH TREATED WOOD NAILERS & BLOCKING SHALL BE CORROSION-RESISTANT & CERTIFIED BY THE FASTENER MANUFACTURER FOR USE WITH THE PRESERVATIVE TREATMENT. CARBON STEEL, ALUMINUM, AND ELECTROPLATED GALVANIZED STEEL FASTENERS SHALL NOT BE USED. ALUMINUM FLASHINGS AND ACCESSORIES SHALL NOT BE INSTALLED IN DIRECT CONTACT WITH TREATED WOOD.
3. ALL ROOF TO WALL/CURB FLASHINGS SHALL EXTEND TO 8" MINIMUM HEIGHT ABOVE ROOF SURFACE U.N.O.
4. ALL ROOFING UNDERLAYMENT OR SELF ADHERING FLASHINGS SHALL BE RATED FOR HIGH TEMPERATURE DUTY.

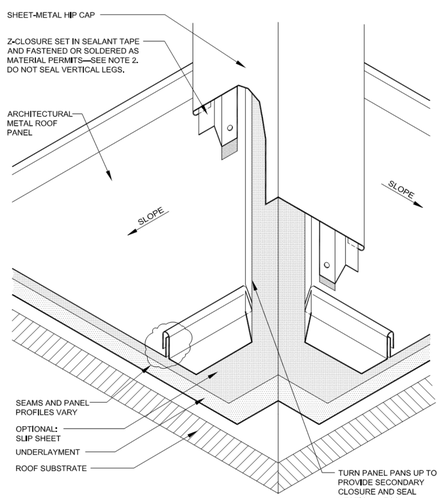

NOTES:

1. SPECIFIC FASTENING REQUIREMENTS ARE NOT INDICATED AS THEY VARY FROM SYSTEM TO SYSTEM DEPENDING ON PANEL MANUFACTURER'S REQUIREMENTS, WIND ZONE AND BUILDING CODE.
2. IF THE Z-CLOSURE IS FASTENED THROUGH THE ROOF DECK, THE PANELS ARE FIXED ALONG THE HIP. IF THE Z-CLOSURE IS FASTENED TO THE PANELS WITH POP RIVETS OR SOLDERED, THE PANELS ARE NOT FIXED AT THE HIP (I.E., FLOATING).
3. REFER TO THE INTRODUCTION OF THE CONSTRUCTION DETAILS CHAPTER FOR ADDITIONAL INFORMATION.

HIP CAP FLASHING

2016 *NOT DRAWN TO SCALE* **AM-8**

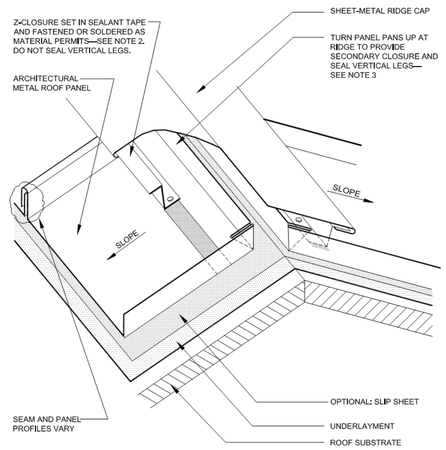

NOTES:

1. SPECIFIC FASTENING REQUIREMENTS ARE NOT INDICATED AS THEY VARY FROM SYSTEM TO SYSTEM DEPENDING ON PANEL MANUFACTURER'S REQUIREMENTS, WIND ZONE AND BUILDING CODE.
2. IF THE Z-CLOSURE IS FASTENED THROUGH THE ROOF DECK, THE PANELS ARE FIXED ALONG THE RIDGE. IF THE Z-CLOSURE IS FASTENED TO THE PANELS WITH POP RIVETS OR SOLDERED, THE PANELS ARE NOT FIXED AT THE RIDGE (I.E., FLOATING).
3. REFER TO THE INTRODUCTION OF THE CONSTRUCTION DETAILS CHAPTER FOR ADDITIONAL INFORMATION.

RIDGE CAP FLASHING

2016 *NOT DRAWN TO SCALE* **AM-6**

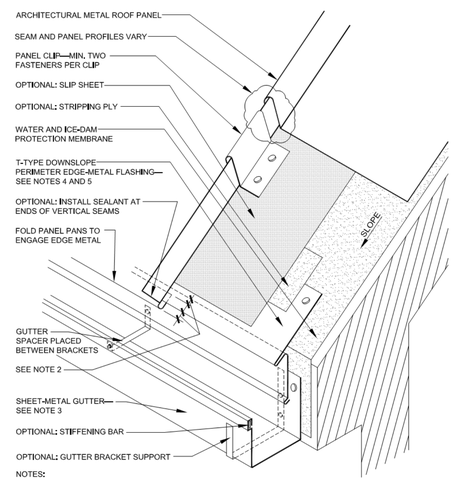

NOTES:

1. SPECIFIC FASTENING REQUIREMENTS ARE NOT INDICATED AS THEY VARY FROM SYSTEM TO SYSTEM DEPENDING ON PANEL MANUFACTURER'S REQUIREMENTS, WIND ZONE AND BUILDING CODE.
2. DIMENSIONS SHOULD ACCOMMODATE EXPECTED MOVEMENT. REFER TO SECTION 4.12 FOR INFORMATION ABOUT THERMAL MOVEMENT CONSIDERATIONS.
3. REFER TO THE ARCHITECTURAL METAL FLASHING SECTION OF THE NRCA ROOFING MANUAL: ARCHITECTURAL METAL FLASHING.
4. REFER TO THE ARCHITECTURAL METAL FLASHING SECTION OF THE NRCA ROOFING MANUAL: ARCHITECTURAL METAL FLASHING, CONDENSATION AND AIR LEAKAGE CONTROL, AND REROOFING FOR MORE INFORMATION ABOUT GUTTERS.
5. REFER TO THE ARCHITECTURAL METAL FLASHING SECTION OF THE NRCA ROOFING MANUAL: ARCHITECTURAL METAL FLASHING, CONDENSATION AND AIR LEAKAGE CONTROL, AND REROOFING FOR PERIMETER EDGE-METAL THICKNESS AND CLEAT RECOMMENDATIONS.
6. REFER TO THE INTRODUCTION OF THE CONSTRUCTION DETAILS CHAPTER FOR ADDITIONAL INFORMATION.

EAVE WITH GUTTER AND WATER AND ICE-DAM PROTECTION MEMBRANE

2016 *NOT DRAWN TO SCALE* **AM-3**

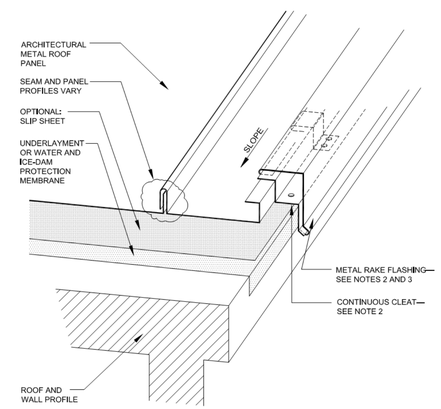

NOTES:

1. SPECIFIC FASTENING REQUIREMENTS ARE NOT INDICATED AS THEY VARY FROM SYSTEM TO SYSTEM DEPENDING ON PANEL MANUFACTURER'S REQUIREMENTS, WIND ZONE AND BUILDING CODE.
2. REFER TO THE ARCHITECTURAL METAL FLASHING SECTION OF THE NRCA ROOFING MANUAL: ARCHITECTURAL METAL FLASHING, CONDENSATION AND AIR LEAKAGE CONTROL, AND REROOFING FOR PERIMETER EDGE-METAL THICKNESS AND CLEAT RECOMMENDATIONS.
3. REFER TO THE INTRODUCTION OF THE CONSTRUCTION DETAILS CHAPTER FOR ADDITIONAL INFORMATION.

RAKE EDGE FLASHING

2016 *NOT DRAWN TO SCALE* **AM-5A**

Architects Design Group

Architects and Planners

I.S.K. Reeves V, F.A.I.A.
Ian A. Reeves, A.I.A.
Susan Gantt A.I.A., LEED-AP

333 N. Knowles Ave.
Winter Park, Florida 32789
(407) 647-1706

Corporate Registration Number: BR1177

REGISTERED ARCHITECT — IAN A. REEVES — 22797 — STATE OF TEXAS

06.05.2020

FIRE STATION NO.5

CITY OF LONGVIEW

100% BID SET

The architect hereby expressly reserves his common law copyright and other property rights in these drawings. These drawings shall not be reproduced without written permission and consent of the architect, nor are they to be assigned to any party without first obtaining written permission and consent.

REVISIONS/ADDENDA

Number	Description	Date Issued

SHEET TITLE:

TYPICAL ARCHITECTURAL METAL ROOFING SYSTEM DETAILS

scale: 12" = 1'-0"
drawn: Author
checked: Checker
approved: Approver
date: June 5, 2020

PROJECT NUMBER: 1006

SHEET NUMBER: A-320

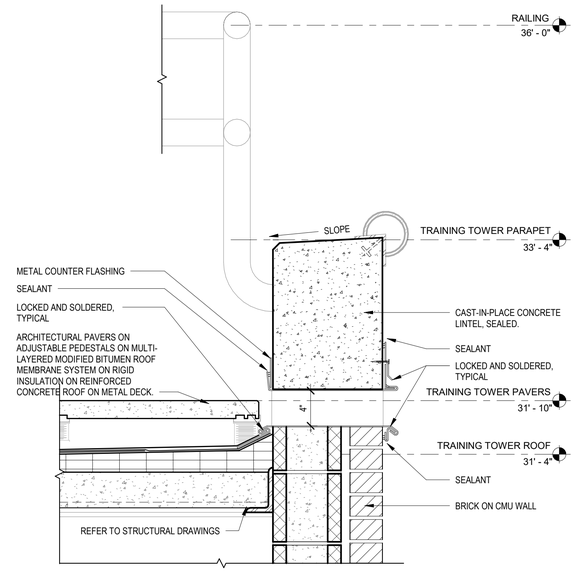

5 TOWER ROOF - OVERFLOW SCUPPER
1 1/2" = 1'-0"

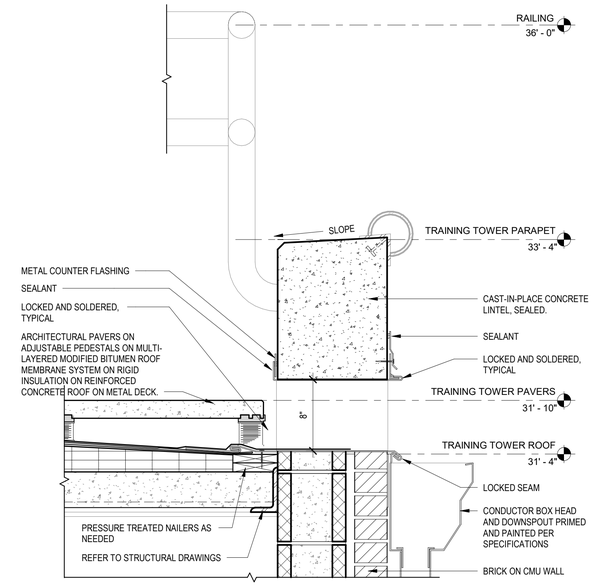

4 TOWER ROOF - SCUPPER AND DOWNSPOUT
1 1/2" = 1'-0"

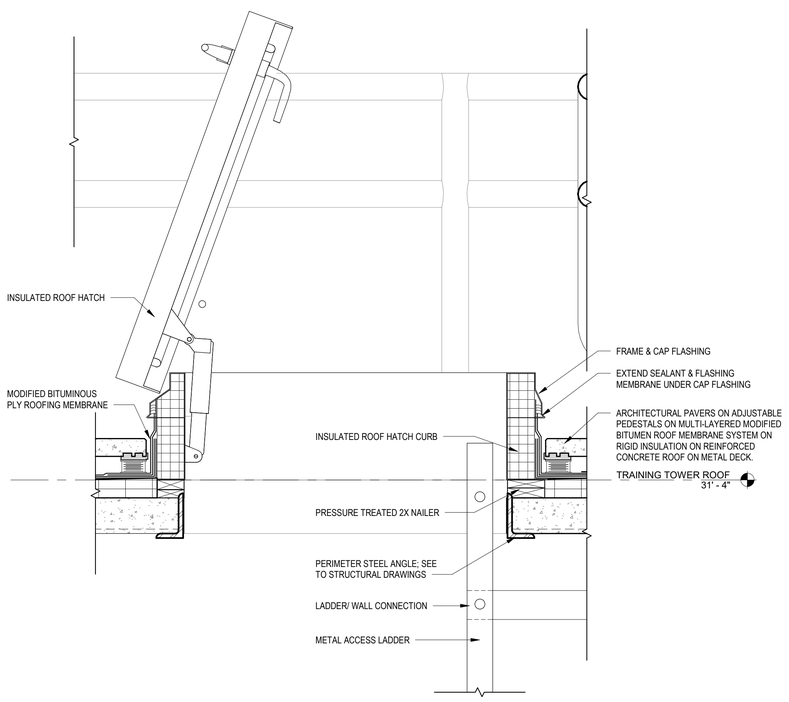

3 TOWER ROOF - HATCH DETAIL
1 1/2" = 1'-0"

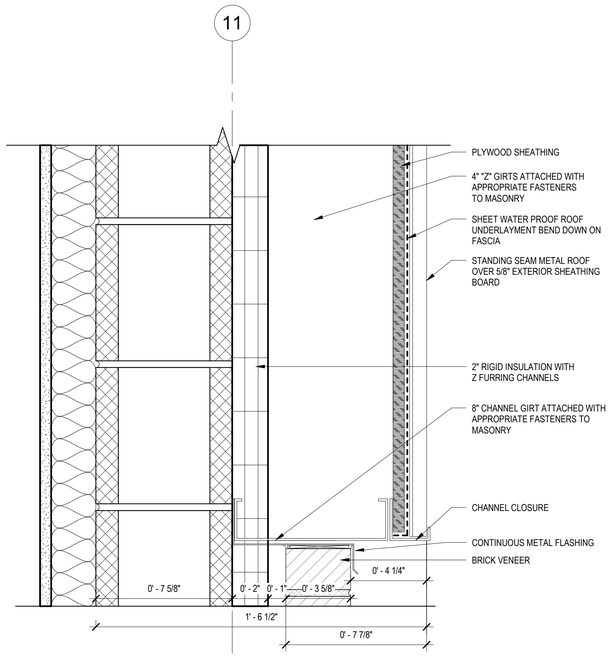

2 TYP.FASCIA DETAIL
3" = 1'-0"

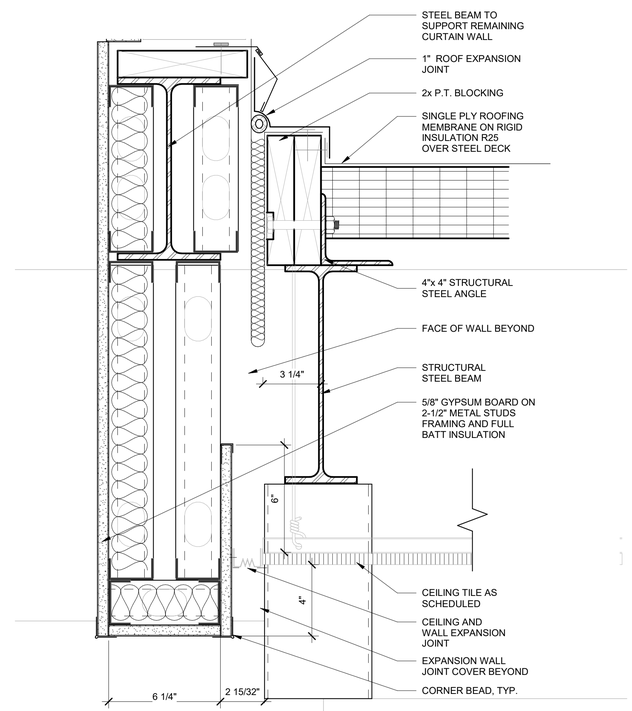

1 ROOF EXPANSION JOINT
3" = 1'-0"

Architects Design Group

Architects and Planners

I.S.K. Reeves V, F.A.I.A.
Ian A. Reeves, A.I.A.
Susan Gantt A.I.A., LEED-AP

333 N. Knowles Ave.
Winter Park, Florida 32789
(407) 647-1706

Corporate Registration Number: BR1177

REGISTERED ARCHITECT IAN A. REEVES 22797 STATE OF TEXAS
06.05.2020

FIRE STATION NO.5

CITY OF LONGVIEW

100% BID SET

The architect hereby expressly reserves his common law copyright and other property rights in these drawings. These drawings shall not be reproduced without written permission and consent of the architect, nor are they to be assigned to any party without first obtaining written permission and consent.

REVISIONS/ADDENDA

Number	Description	Date Issued

SHEET TITLE:

ROOF + VERTICAL DETAILS

scale: As indicated
drawn: ADG DALLAS
checked: SB/MBV
approved: IAR
date: June 5, 2020

PROJECT NUMBER:

1006

SHEET NUMBER:

A-321

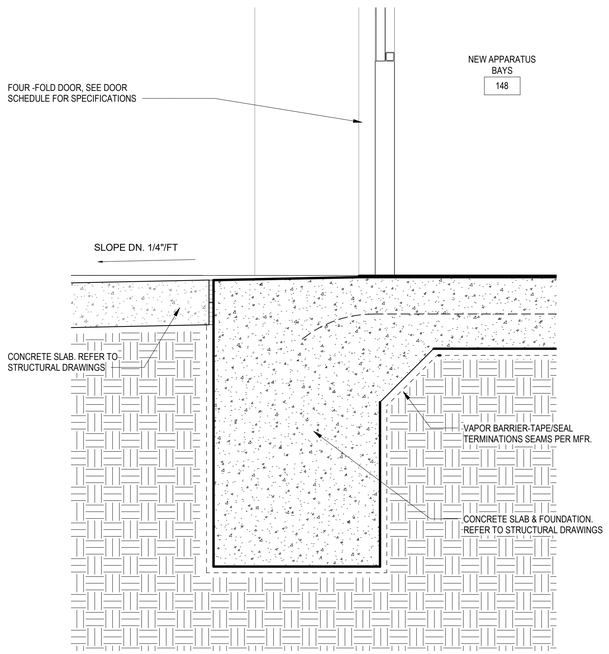

6 WALL SECTION @ APP BAY BIFOLD DETAIL

1 1/2" = 1'-0"

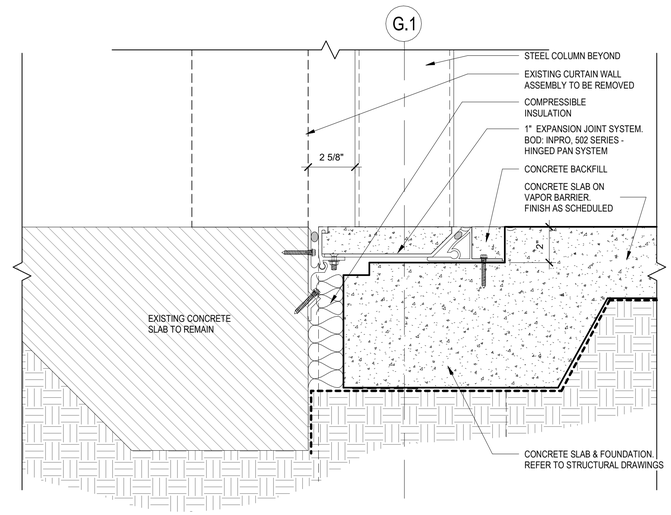

5 FLOOR EXPANSION JOINT

3" = 1'-0"

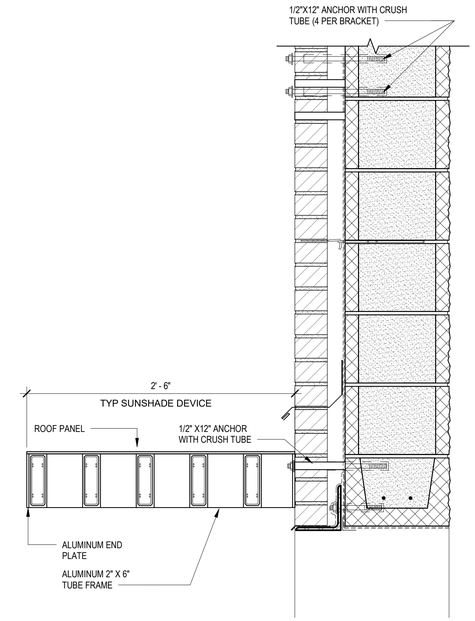

4 ENTRY CANOPY @ APPARATUS BAY

1 1/2" = 1'-0"

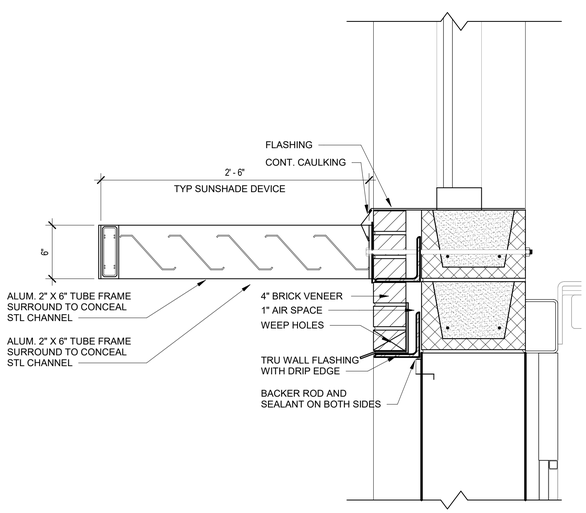

3 CANOPY @ APP BAY BIFOLD DOORS

1 1/2" = 1'-0"

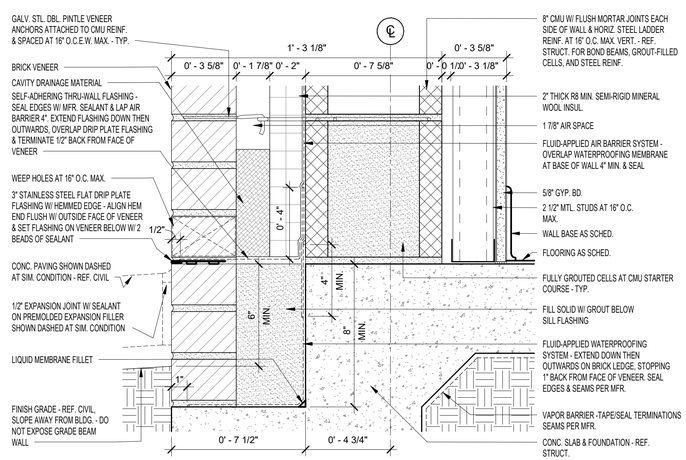

2 BASE DETAIL AT BRICK LEDGE

3" = 1'-0"

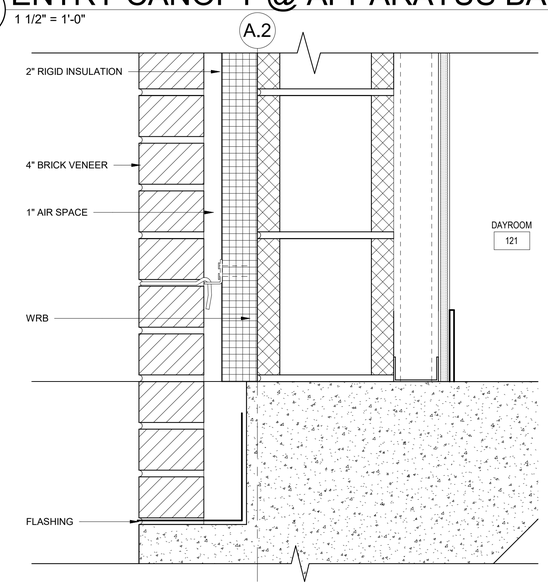

1 DETAIL @ WALL BASE

3" = 1'-0"

Architects Design Group

Architects and Planners

I.S.K. Reeves V, F.A.I.A.
Ian A. Reeves, A.I.A.
Susan Gantt A.I.A., LEED-AP

333 N. Knowles Ave.
Winter Park, Florida 32789
(407) 647-1706

Corporate Registration Number: BR1177

REGISTERED ARCHITECT IAN A. REEVES 22797 STATE OF TEXAS

06.05.2020

FIRE STATION NO.5

CITY OF LONGVIEW

100% BID SET

The architect hereby expressly reserves his common law copyright and other property rights in these drawings. These drawings shall not be reproduced without written permission and consent of the architect, nor are they to be assigned to any party without first obtaining written permission and consent.

REVISIONS/ADDENDA

Number	Description	Date Issued

SHEET TITLE:

ENLARGED EXTERIOR DETAILS

scale: As indicated
drawn: ADG DALLAS
checked: SB/MBV
approved: IAR
date: June 5, 2020

PROJECT NUMBER:

1006

SHEET NUMBER:

A-371

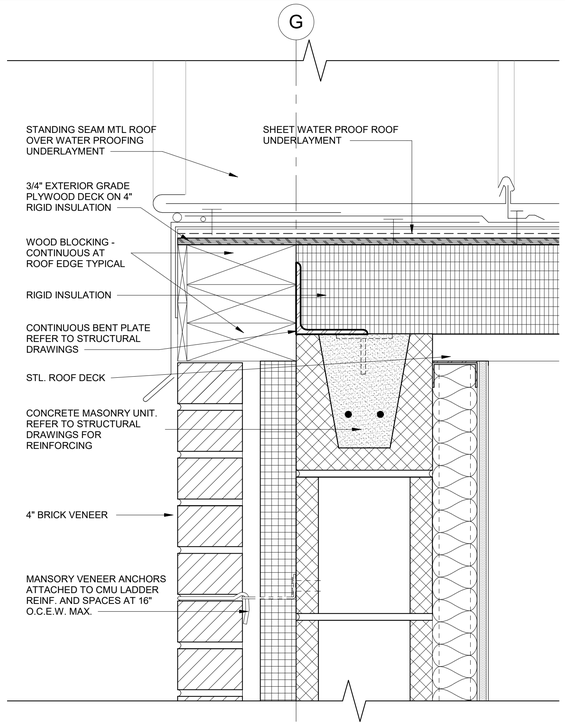

6 DETAIL @ HEAD WALL / ROOF
3" = 1'-0"

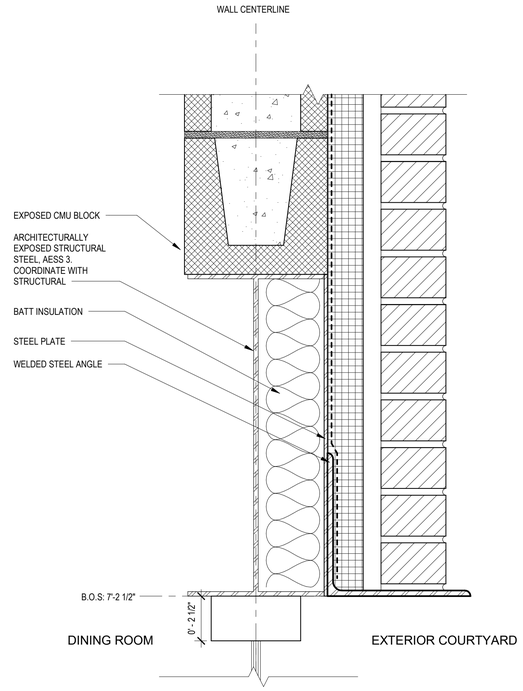

5 EXPOSED BEAM DETAIL
3" = 1'-0"

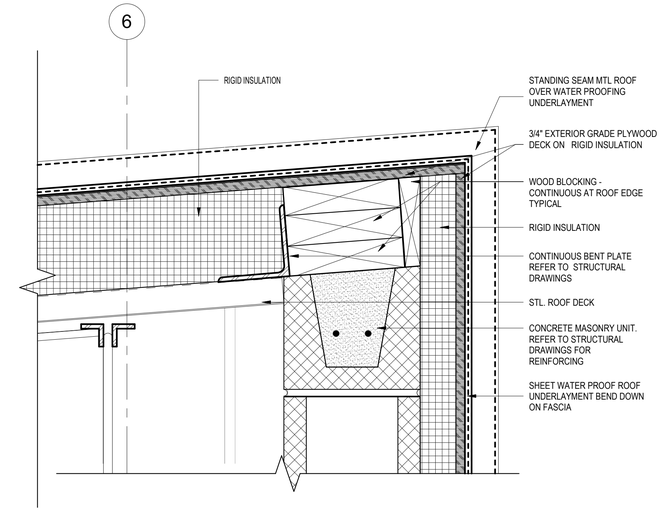

4 TYP. ROOF/FASCIA DETAIL
3" = 1'-0"

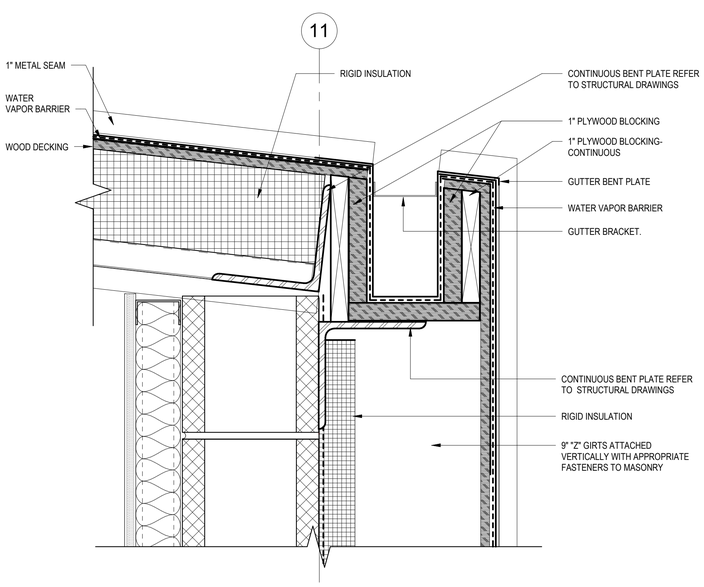

3 DETAIL @ BUNK
3" = 1'-0"

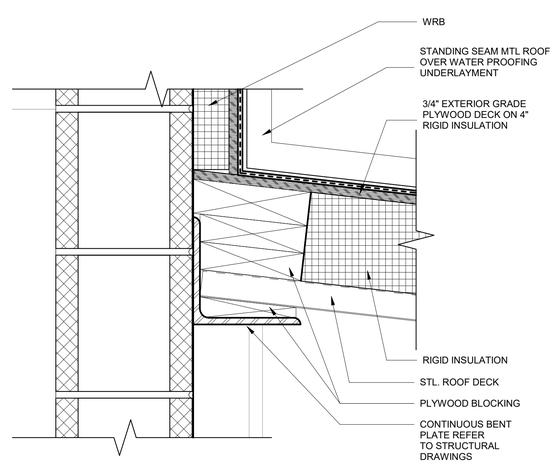

2 TYP. HEAD WALL DETAIL
3" = 1'-0"

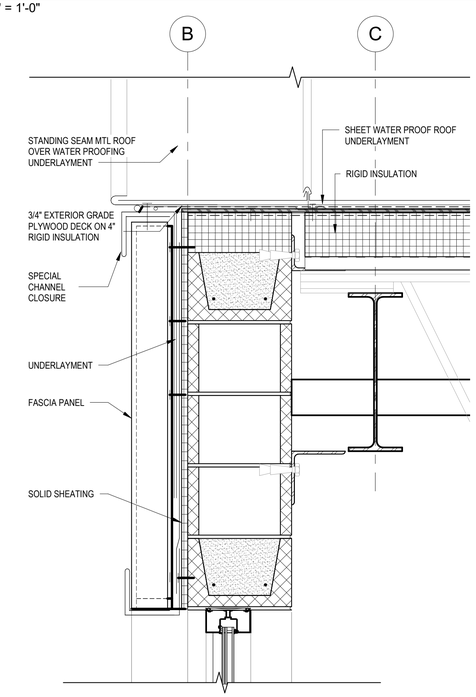

1 WALL SECTION @ APP BAY BIFOLD - DETAIL
1 1/2" = 1'-0"

Architects Design Group

Architects and Planners

I.S.K. Reeves V, F.A.I.A.
Ian A. Reeves, A.I.A.
Susan Gantt A.I.A., LEED-AP

333 N. Knowles Ave.
Winter Park, Florida 32789
(407) 647-1706

Corporate Registration Number: BR1177

REGISTERED ARCHITECT IAN A. REEVES 22797 STATE OF TEXAS
06.05.2020

FIRE STATION NO.5

CITY OF LONGVIEW

100% BID SET

The architect hereby expressly reserves his common law copyright and other property rights in these drawings. These drawings shall not be reproduced without written permission and consent of the architect, nor are they to be assigned to any party without first obtaining written permission and consent.

REVISIONS/ADDENDA

Number	Description	Date Issued

SHEET TITLE:

ENLARGED EXTERIOR DETAILS

scale: As indicated
drawn: ADG DALLAS
checked: SB/MBV
approved: IAR
date: June 5, 2020

PROJECT NUMBER:

1006

SHEET NUMBER:

A-372

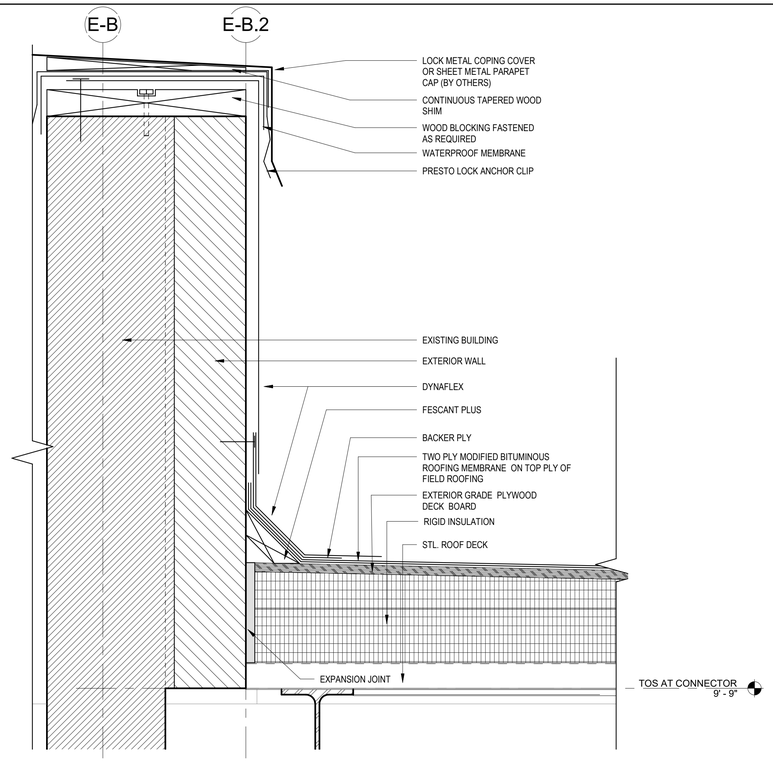

1 WALL SECTION @ CONNECTOR

3" = 1'-0"

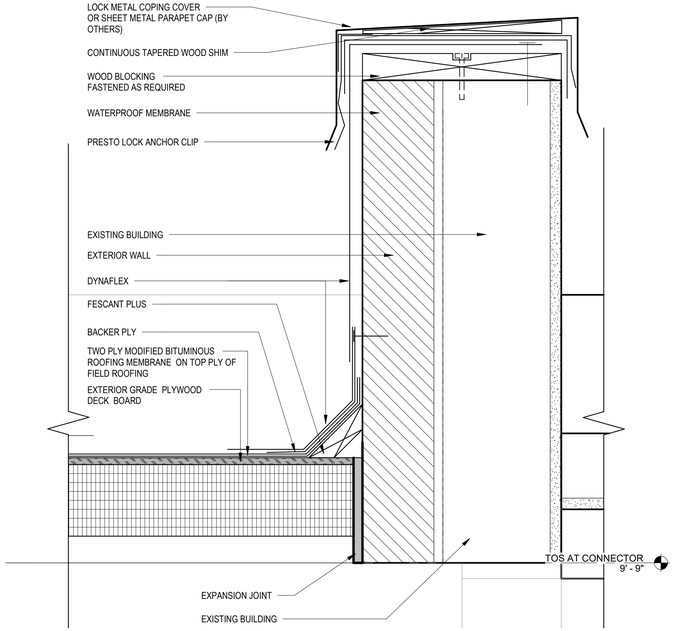

2 WALL SECTION DETAIL @ CONNECTOR WEST/EAST

3" = 1'-0"

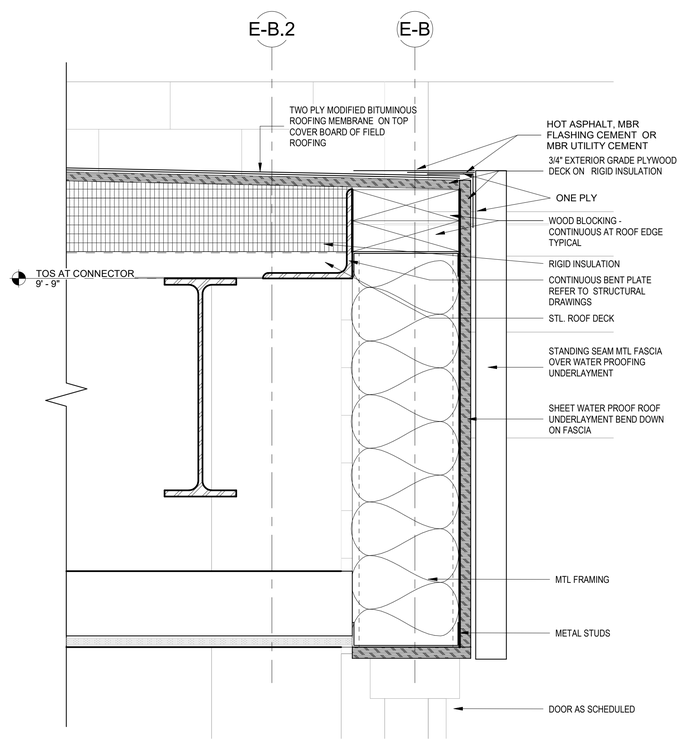

3 SECTION @ CONNECTOR WEST

3" = 1'-0"

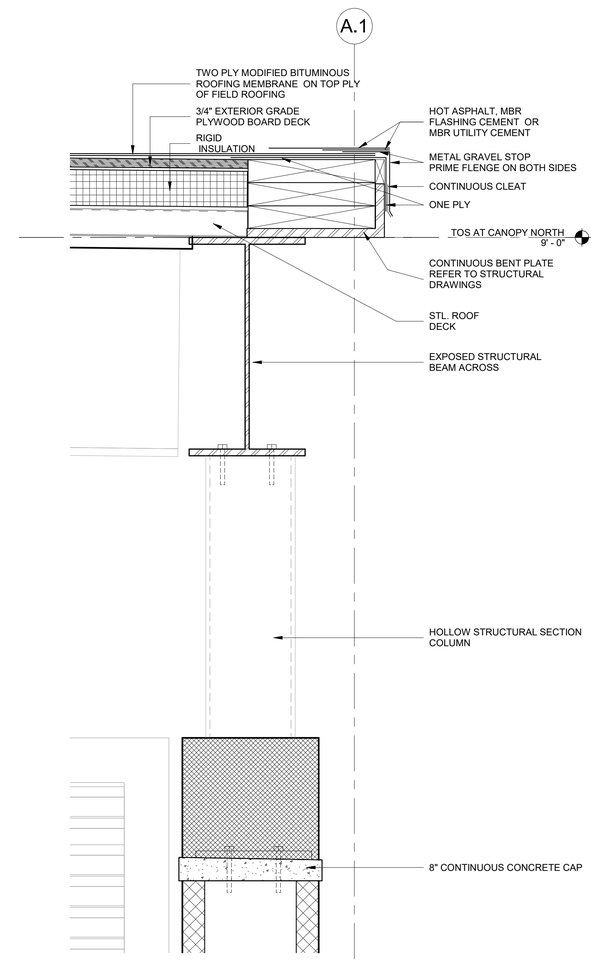

4 SECTION @ CONNECTOR LOOKING WEST

3" = 1'-0"

Architects Design Group

Architects and Planners

I.S.K. Reeves V, F.A.I.A.
Ian A. Reeves, A.I.A.
Susan Gantt A.I.A., LEED-AP

333 N. Knowles Ave.
Winter Park, Florida 32789
(407) 647-1706

Corporate Registration Number: BR1177

REGISTERED ARCHITECT IAN A. REEVES 22797 STATE OF TEXAS

06.05.2020

FIRE STATION NO.5

CITY OF LONGVIEW

100% BID SET

The architect hereby expressly reserves his common law copyright and other property rights in these drawings. These drawings shall not be reproduced without written permission and consent of the architect, nor are they to be assigned to any party without first obtaining written permission and consent.

REVISIONS/ADDENDA

Number	Description	Date Issued

SHEET TITLE:

ENLARGED EXTERIOR DETAILS @ CONNECTOR

scale: 3" = 1'-0"
drawn: ADG DALLAS
checked: SB/MBV
approved: IAR
date: June 5, 2020

PROJECT NUMBER:

1006

SHEET NUMBER:

A-373

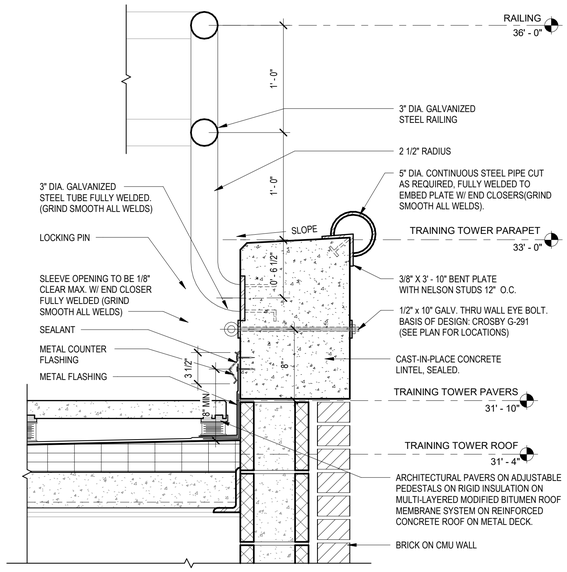

4 TOWER RAILING
1 1/2" = 1'-0"

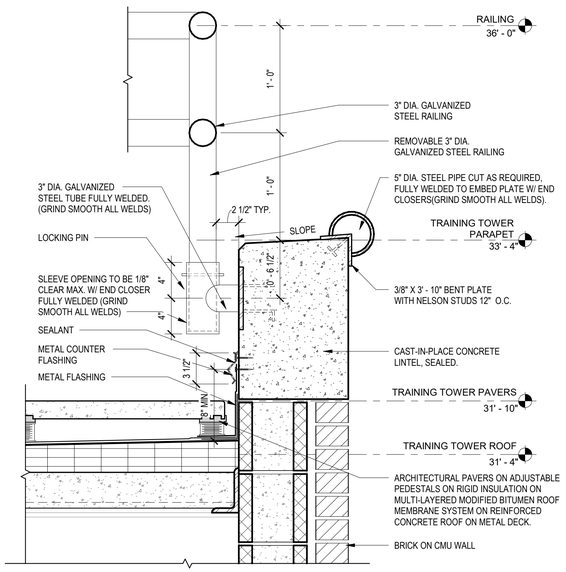

3 TOWER REMOVABLE RAILING
1 1/2" = 1'-0"

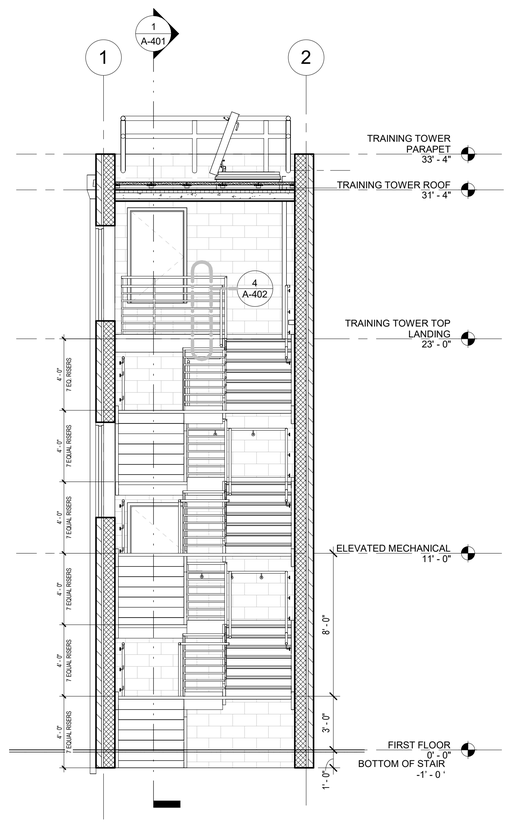

2 TRAINING TOWER SECTION 2
1/4" = 1'-0"

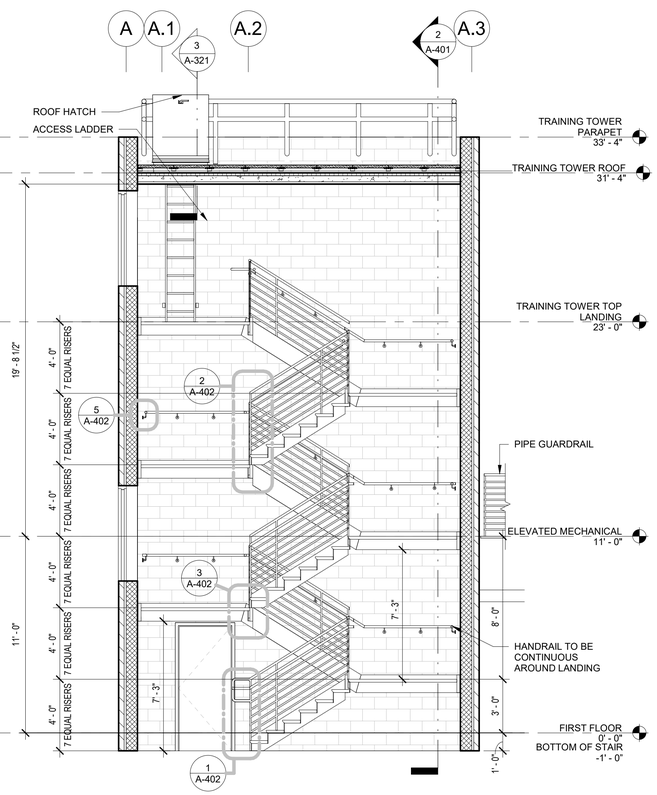

1 TRAINING TOWER SECTION
1/4" = 1'-0"

Architects Design Group

Architects and Planners

I.S.K. Reeves V, F.A.I.A.
Ian A. Reeves, A.I.A.
Susan Gantt A.I.A., LEED-AP

333 N. Knowles Ave.
Winter Park, Florida 32789
(407) 647-1706

Corporate Registration Number: BR1177

06.05.2020

FIRE STATION NO.5

CITY OF LONGVIEW

100% BID SET

The architect hereby expressly reserves his common law copyright and other property rights in these drawings. These drawings shall not be reproduced without written permission and consent of the architect, nor are they to be assigned to any party without first obtaining written permission and consent.

REVISIONS/ADDENDA

Number	Description	Date Issued

SHEET TITLE:

VERTICAL CIRCULATION DETAILS

scale: As indicated
drawn: ADG DALLAS
checked: SB/MBV
approved: IAR
date: June 5, 2020

PROJECT NUMBER:

1006

SHEET NUMBER:

A-401

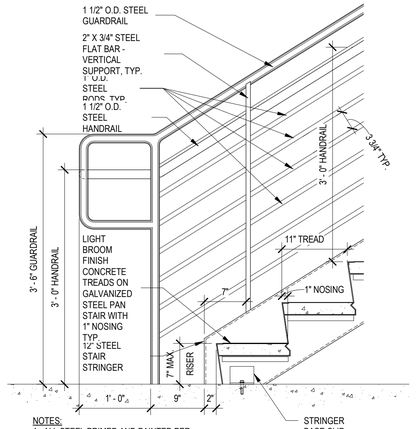

NOTES:
1. ALL STEEL PRIMED AND PAINTED PER SPECIFICATIONS.
2. SIGNED AND SEALED STAIR DESIGN AND CALCULATIONS MUST BE PROVIDED BY STAIR MANUFACTURER. SEE SPECIFICATIONS

1 STAIR - HANDRAIL DETAIL
1" = 1'-0"

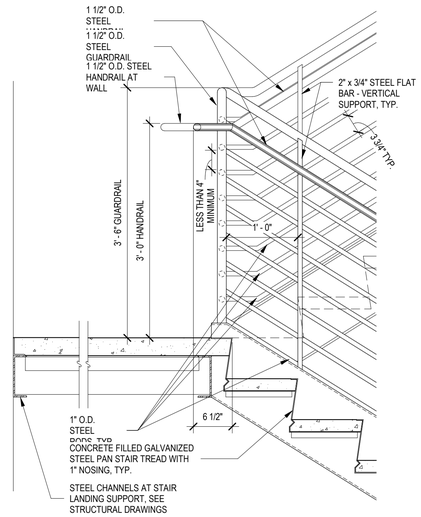

2 STAIR - LANDING DETAIL
1" = 1'-0"

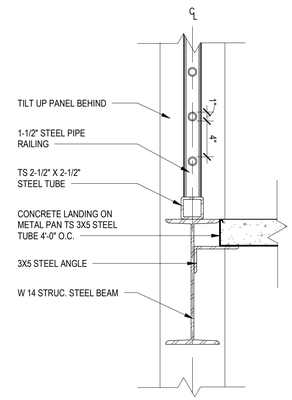

3 STAIR - LANDING DETAIL
1 1/2" = 1'-0"

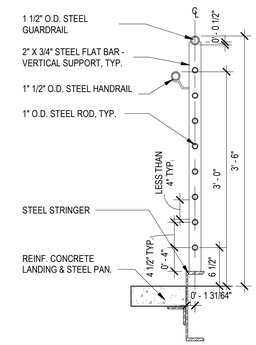

4 STAIR - RAIL SECTION
1" = 1'-0"

GENERAL NOTES:
1. ALL STEEL PRIMED AND PAINTED PER SPECIFICATIONS.
2. SIGNED AND SEALED STAIR DESIGN AND CALCULATIONS MUST BE PROVIDED BY STAIR MANUFACTURER. SEE SPECIFICATIONS.

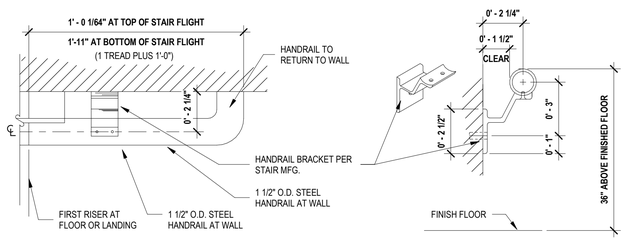

5 STAIR HANDRAIL WALL ATTACHMENT DETAIL
3" = 1'-0"

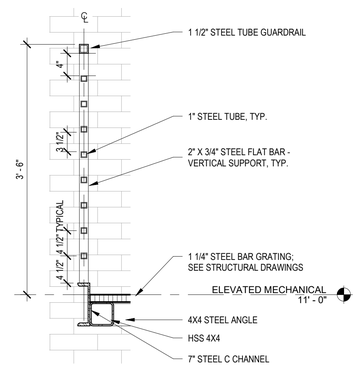

6 GUARDRAIL LANDING DETAIL
1" = 1'-0"

Architects Design Group

Architects and Planners
I.S.K. Reeves V, F.A.I.A.
Ian A. Reeves, A.I.A.
Susan Gantt A.I.A., LEED-AP

333 N. Knowles Ave.
Winter Park, Florida 32789
(407) 647-1706

Corporate Registration
Number: BR1177

REGISTERED ARCHITECT IAN A. REEVES 22797 STATE OF TEXAS
06.05.2020

FIRE STATION NO.5

CITY OF LONGVIEW

100% BID SET

The architect hereby expressly reserves his common law copyright and other property rights in these drawings. These drawings shall not be reproduced without written permission and consent of the architect, nor are they to be assigned to any party without first obtaining written permission and consent.

REVISIONS/ADDENDA

Number	Description	Date Issued

SHEET TITLE:
VERTICAL CIRCULATION DETAILS

scale: As indicated
drawn: ADG DALLAS
checked: SB/MBV
approved: IAR
date: June 5, 2020
PROJECT NUMBER:
1006
SHEET NUMBER:
A-402

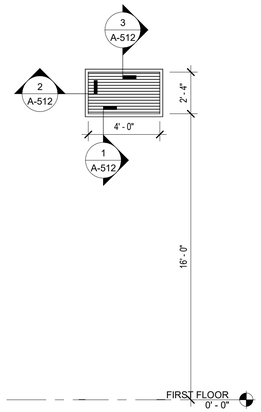

LV1
1/4" = 1'-0"

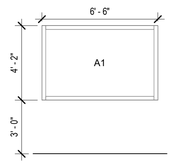

IW15
1/4" = 1'-0"

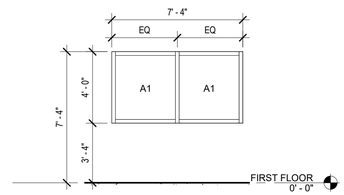

IW14
1/4" = 1'-0"

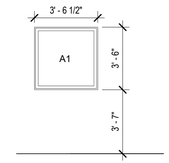

W8
1/4" = 1'-0"

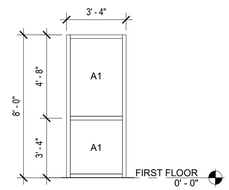

W7
1/4" = 1'-0"

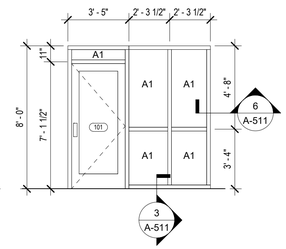

W6
1/4" = 1'-0"

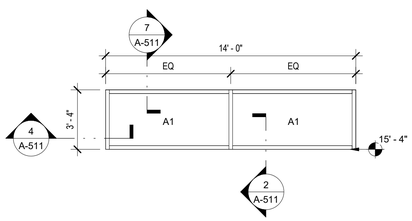

W4
1/4" = 1'-0"

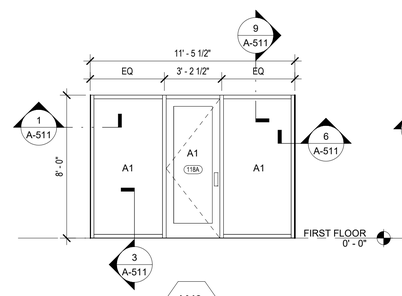

W3
1/4" = 1'-0"

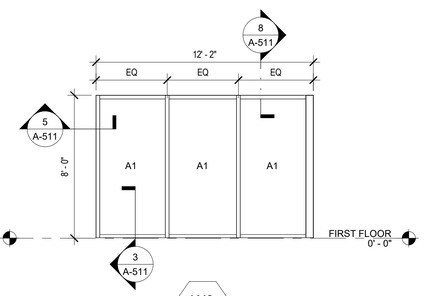

W2
1/4" = 1'-0"

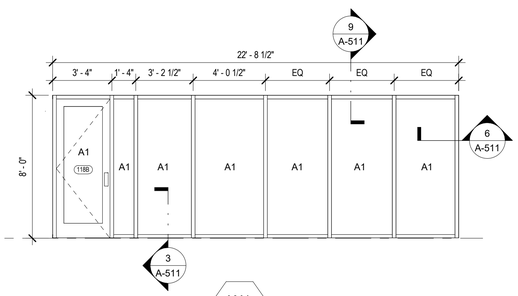

W1
1/4" = 1'-0"

GLASS TYPE

TYPE A1 = LAMINATED & INSULATED LARGE MISSILE HURRICANE IMPACT LEVEL "D" GLAZING, LOW E COATING

NOTE: GC TO FIELD VERIFY ALL OPENING DIMENSIONS PRIOR TO FABRICATION

Architects Design Group

Architects and Planners

I.S.K. Reeves V, F.A.I.A.
Ian A. Reeves, A.I.A.
Susan Gantt A.I.A., LEED-AP

333 N. Knowles Ave.
Winter Park, Florida 32789
(407) 647-1706

Corporate Registration
Number: BR1177

REGISTERED ARCHITECT
IAN A. REEVES
22797
STATE OF TEXAS
06.05.2020

FIRE STATION NO.5

CITY OF LONGVIEW

100% BID SET

The architect hereby expressly reserves his common law copyright and other property rights in these drawings. These drawings shall not be reproduced without written permission and consent of the architect, nor are they to be assigned to any party without first obtaining written permission and consent.

REVISIONS/ADDENDA

Number	Description	Date Issued

SHEET TITLE:

WINDOW ELEVATIONS

scale: As indicated
drawn: ADG DALLAS
checked: SB/MBV
approved: IAR
date: June 5, 2020

PROJECT NUMBER:

1006

SHEET NUMBER:

A-501

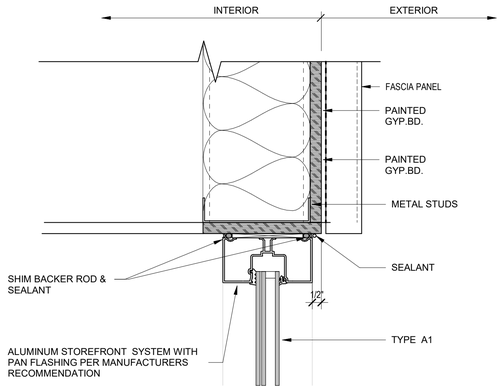

9 WINDOW HEAD
3" = 1'-0"

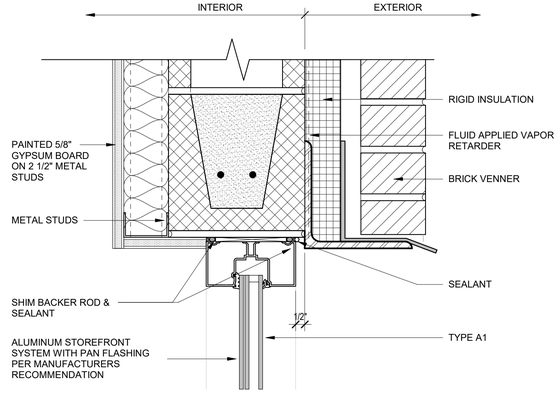

8 WINDOW HEAD
3" = 1'-0"

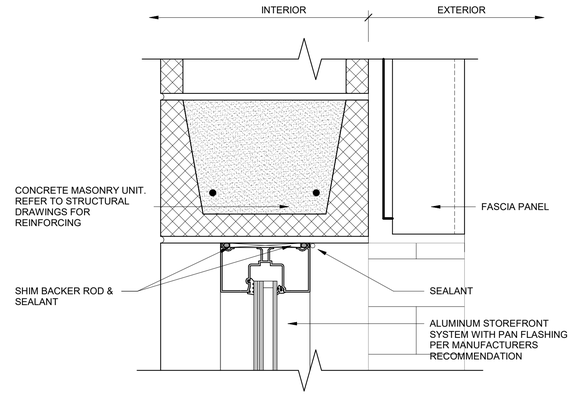

7 WINDOW HEAD
3" = 1'-0"

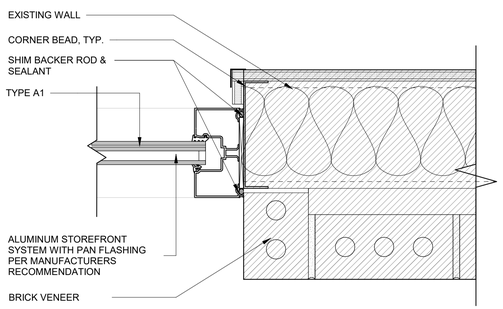

6 WINDOW JAMB
3" = 1'-0"

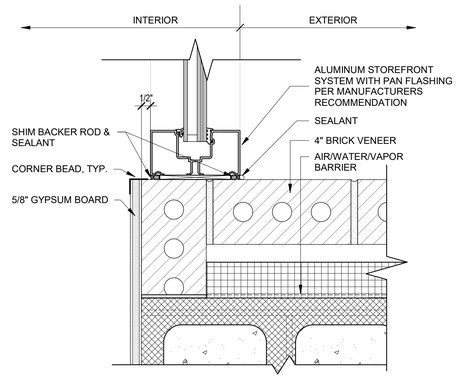

5 WINDOW JAMB
3" = 1'-0"

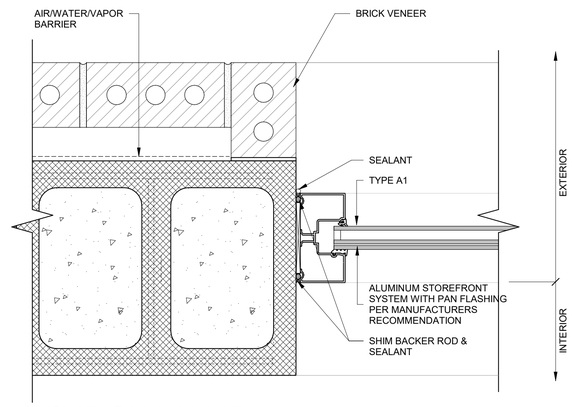

4 WINDOW JAMB
3" = 1'-0"

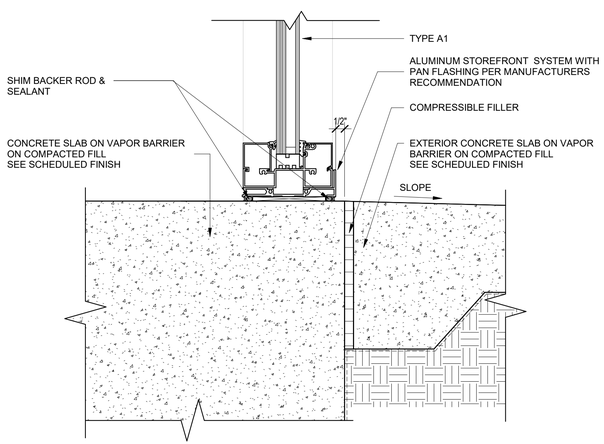

3 WINDOW SILL
3" = 1'-0"

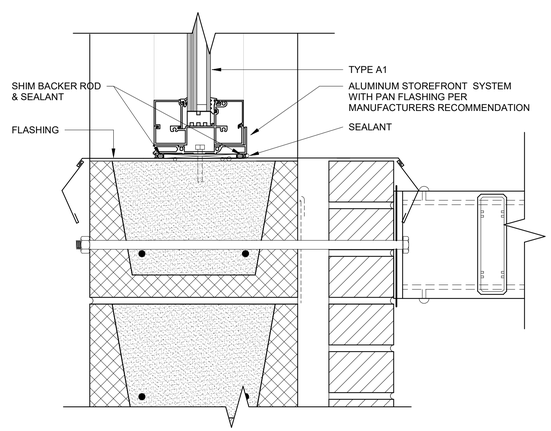

2 WINDOW SILL
3" = 1'-0"

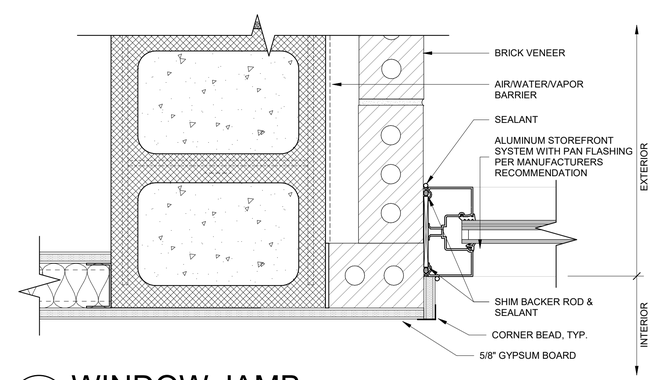

1 WINDOW JAMB
3" = 1'-0"

Architects Design Group

Architects and Planners

I.S.K. Reeves V, F.A.I.A.
Ian A. Reeves, A.I.A.
Susan Gantt A.I.A., LEED-AP

333 N. Knowles Ave.
Winter Park, Florida 32789
(407) 647-1706

Corporate Registration Number: BR1177

REGISTERED ARCHITECT IAN A. REEVES 22797 STATE OF TEXAS
06.05.2020

FIRE STATION NO.5

CITY OF LONGVIEW

100% BID SET

The architect hereby expressly reserves his common law copyright and other property rights in these drawings. These drawings shall not be reproduced without written permission and consent of the architect, nor are they to be assigned to any party without first obtaining written permission and consent.

REVISIONS/ADDENDA

Number	Description	Date Issued

SHEET TITLE:

WINDOW DETAILS

scale: 3" = 1'-0"
drawn: Author
checked: Checker
approved: Approver
date: June 5, 2020
PROJECT NUMBER:
1006
SHEET NUMBER:
A-511

DOOR SCHEDULE

Mark	Door Type	Closer	Card Reader	Glass Type	Frame Type	Width	Height	Frame Material	Door Material	Door Fire Rating	Door HW Set #	Existing OR Exterior Door	Description
						3' - 0"	1' - 0 19/32"						
101	D4	Closer			F2	3' - 0"	7' - 0"	AL	GL		1.0		STOREFRONT ENTRY DOOR - FULL LITE 12" AT BOTTOM
103	D1				F1	3' - 0"	7' - 0"	HM	SC		19.0		
104	D1				F1	3' - 0"	7' - 0"	HM	SC		14.0		
104A	D1				F1	3' - 0"	7' - 0"	HM	SC	20 MIN	21.0		
104B	D1				F1	3' - 0"	7' - 0"	HM	SC		22.0		
105	D3	Closer		TYPE B	F1	3' - 0"	7' - 0"	HM	SC		24.0		
106	D1				F1	3' - 0"	7' - 0"	HM	SC		19.0		
107A	D3			TYPE D	EXISTING FRAME	3' - 0"	7' - 0"	HM	HM	45 MIN	15.0		
107B	D3			TYPE D	EXISTING FRAME	3' - 0"	7' - 0"	HM	HM	45 MIN	15.0		
107C	D1				F2	3' - 0"	7' - 0"	HM	HM		7.0	EXISTING DOOR	
107D	D1				F2	3' - 0"	7' - 0"	HM	HM		7.0	EXISTING DOOR	
107E	D7				AS SPEC	10' - 0"	12' - 0"	AS SPEC	AS SPEC		27.0		1-3/8" thick polystyrene insulated, stucco embossed 27 gauge steel ext. with light ribbed pattern.
107F	D7				AS SPEC	10' - 0"	12' - 0"	AS SPEC	AS SPEC		27.0		1-3/8" thick polystyrene insulated, stucco embossed 27 gauge steel ext. with light ribbed pattern.
107G	D7				AS SPEC	10' - 0"	12' - 0"	AS SPEC	AS SPEC		27.0		1-3/8" thick polystyrene insulated, stucco embossed 27 gauge steel ext. with light ribbed pattern.
107H	D1				AS SPEC	6' - 0"	7' - 0"	AS SPEC	AS SPEC		25.0		
107K	D1				AS SPEC	6' - 0"	7' - 0"	AS SPEC	AS SPEC		25.0		
107L	D7				F2	3' - 0"	7' - 0"	HM	HM		12.0	EXISTING DOOR	
107N	D7				AS SPEC	10' - 0"	12' - 0"	AS SPEC	AS SPEC		27.0		1-3/8" thick polystyrene insulated, stucco embossed 27 gauge steel ext. with light ribbed pattern.
107P	D7				AS SPEC	10' - 0"	12' - 0"	AS SPEC	AS SPEC		27.0		1-3/8" thick polystyrene insulated, stucco embossed 27 gauge steel ext. with light ribbed pattern.
107R	D7				AS SPEC	10' - 0"	12' - 0"	AS SPEC	AS SPEC		27.0		1-3/8" thick polystyrene insulated, stucco embossed 27 gauge steel ext. with light ribbed pattern.
111	D3			TYPE B	F1	3' - 0"	7' - 0"	HM	SC		24.0		
112A	D1				F1	3' - 0"	7' - 0"	HM	HM		11.0		
113	D1				F1	3' - 0"	7' - 0"	HM	SC		11.0		
114A	D1				F1	3' - 0"	7' - 0"	HM	SC		19.0		
114B	D1				F1	3' - 0"	7' - 0"	HM	HM		8.0		
115	D4				F2	3' - 0"	7' - 0"	AL	GL		1.0	EXISTING DOOR	
117	D1				F1	3' - 0"	7' - 0"	HM	SC		14.0		
118A	D4	Closer			AS SPEC	3' - 0"	7' - 9 1/2"	AL	GL		1.0		STOREFRONT ENTRY DOOR - FULL LITE 12" AT BOTTOM
118B	D4	Closer			AS SPEC	3' - 0"	7' - 9 1/2"	AL	GL		1.0		STOREFRONT ENTRY DOOR - FULL LITE 12" AT BOTTOM
119A	D4	Closer			F2	3' - 0"	7' - 0"	AL	GL		1.0		
120A	D5				F3	3' - 6"	8' - 0"	AS SPEC	AS SPEC		27.0		OVERHEAD ROLLING DOOR-AS SPECIFIED
120B	D5				F3	3' - 6"	8' - 0"	AS SPEC	AS SPEC		27.0		OVERHEAD ROLLING DOOR-AS SPECIFIED
120C	D5				F3	3' - 6"	8' - 0"	AS SPEC	AS SPEC		27.0		OVERHEAD ROLLING DOOR-AS SPECIFIED
124	D1				F1	3' - 0"	7' - 0"	HM	SC		22.0		
125	D1				F1	3' - 0"	7' - 0"	HM	SC		22.0		
126	D1				F1	3' - 0"	7' - 0"	HM	SC		22.0		
127	D1				F1	3' - 0"	7' - 0"	HM	SC		22.0		
128	D1				F2	4' - 0"	7' - 0"	HM	HM		6.0		
129	D1				F1	3' - 0"	7' - 0"	HM	SC		22.0		
130	D1	Closer			F1	3' - 0"	7' - 0"	HM	SC	20 MIN	21.0		
131	D1				F1	3' - 0"	7' - 0"	HM	SC		22.0		
132	D1				F1	3' - 0"	7' - 0"	HM	SC		22.0		
133	D1				F1	3' - 0"	7' - 0"	HM	SC		22.0		
134	D1	Closer			F1	3' - 0"	7' - 0"	HM	SC	20 MIN	21.0		
135	D1				F1	3' - 0"	7' - 0"	HM	SC		22.0		
136	D1				F1	3' - 0"	7' - 0"	HM	SC		22.0		
137	D1				F1	3' - 0"	7' - 0"	HM	SC		22.0		
138	D1				F1	3' - 0"	7' - 0"	HM	SC		22.0		
139	D1				F1	3' - 0"	7' - 0"	HM	SC		22.0		
140	D1				F1	3' - 0"	7' - 0"	HM	SC		22.0		
140A	D1	Closer			F1	3' - 0"	7' - 0"	HM	SC	20 MIN	17.0		
140B	D1	Closer			F1	3' - 0"	7' - 0"	HM	SC	20 MIN	17.0		
140C	D1	Closer			F1	3' - 0"	7' - 0"	HM	HM		5.0		
141	D1				F2	3' - 0"	7' - 0"	HM	HM		5.0		
142	D1				F1	3' - 0"	7' - 0"	HM	SC		19.0		
143	D3			TYPE B	F1	3' - 0"	7' - 0"	HM	SC		14.0		
144	D3	Closer		TYPE B	F1	3' - 0"	7' - 0"	HM	SC		24.0		
145	D1				F2	3' - 0"	7' - 0"	HM	HM		23.0		
146	D1				F2	3' - 0"	7' - 0"	HM	HM		12.0		
147	D2				F4	6' - 0"	7' - 0"	HM	HM		2.0		
148A	D1	Closer			F2	3' - 0"	7' - 0"	HM	HM		8.0		
148B	D6				AS SPEC	14' - 0"	14' - 0"	AS SPEC	AS SPEC		27.0		
148C	D6				AS SPEC	14' - 0"	14' - 0"	AS SPEC	AS SPEC		27.0		
148D	D6				AS SPEC	14' - 0"	14' - 0"	AS SPEC	AS SPEC		27.0		

DOOR SCHEDULE

Mark	Door Type	Closer	Card Reader	Glass Type	Frame Type	Width	Height	Frame Material	Door Material	Door Fire Rating	Door HW Set #	Existing OR Exterior Door	Description
148E	D1	Closer	Card Reader		F2	3' - 0"	7' - 0"	HM	HM		3.0		
148F	D3	Closer		TYPE D	F2	3' - 0"	7' - 0"	HM	HM	45 MIN	15.0		
148G	D1	Closer	Card Reader		F2	3' - 0"	7' - 0"	HM	HM		3.0		
148H	D6				AS SPEC	14' - 0"	14' - 0"	NA	NA		27.0		1-3/8" thick polystyrene insulated, stucco embossed 27 gauge steel exterior with light ribbed pattern.
148L	D6				AS SPEC	14' - 0"	14' - 0"	NA	NA		27.0		1-3/8" thick polystyrene insulated, stucco embossed 27 gauge steel exterior with light ribbed pattern.
148M	D6				AS SPEC	14' - 0"	14' - 0"	NA	NA		27.0		1-3/8" thick polystyrene insulated, stucco embossed 27 gauge steel exterior with light ribbed pattern.
149	D1	Closer			F2	3' - 0"	7' - 0"	HM	HM		16.0		
150	D1	Closer			F2	3' - 0"	7' - 0"	HM	HM		18.0		
151	D1	Closer			F2	3' - 0"	7' - 0"	HM	HM		18.0		
152	D1				F2	4' - 0"	7' - 0"	HM	HM		20.0		
154A	D1				F2	3' - 0"	7' - 0"	HM	HM		20.0		
154B	D5				F4	6' - 0"	8' - 0"	AS SPEC	AS SPEC		27.0		EXTERIOR SHOP INSULATED OVERHEAD COILING DOOR
200	D1	Closer			F2	3' - 0"	7' - 0"	HM	HM		5.0	EXTERIOR DOOR	DOOR STOP AND HOLD LATCH TO EXT. WALL REQUIRED; 180 DEGREE DOOR SWING
201	D1	Closer			F2	3' - 0"	7' - 0"	HM	HM	45 MIN	4.0		
201A	D2				F4	6' - 0"	7' - 0"	HM	HM		10.0		
T2	D8				F5	3' - 0"	7' - 0"	HM	HM		12.0		
T3	D8				F5	3' - 0"	5' - 0"	HM	HM		13.0		TRAINING TOWER METAL ACCESS PANEL
T4	D8				F5	3' - 0"	5' - 0"	HM	HM		13.0		TRAINING TOWER METAL ACCESS PANEL
T5	D8				F5	3' - 0"	5' - 0"	HM	HM		13.0		TRAINING TOWER METAL ACCESS PANEL
T6	D8				F5	3' - 0"	5' - 0"	HM	HM		13.0		TRAINING TOWER METAL ACCESS PANEL
T7	D8				F5	3' - 0"	5' - 0"	HM	HM		13.0		TRAINING TOWER METAL ACCESS PANEL

GENERAL NOTES

1. REFER TO FINISH SCHEDULE FOR ALL FINISH MATERIAL AND FINISH LOCATIONS ALL SURFACES EXPOSED TO VIEW ARE TO BE PAINTED PER SPECIFICATIONS DIVISION 9
2. HOLLOW METAL FRAMES IN CMU/CONCRETE WALLS TO BE BITUMINOUS BACK COATED AND GROUT FILLED. PROVIDE CONDUIT RACEWAYS FOR ELECTRONIC WIRING PRIOR TO FRAME GROUTING. PROVIDE ADDITIONAL STIFFENING / SUPPORT AS RECOMMENDED BY THE DOOR / FRAME MANUFACTURER.
3. ALL DOORS TO BE 1 3/4" UNLESS NOTED OTHERWISE\
4. FIELD VERIFY ALL DIMENSIONS
5. REFER TO SPECIFICATION SECTION 08800 FOR GLAZING TYPES AND MATERIALS.
6. ALL DOORS IN MASONRY OPENINGS SHALL MATCH BLOCK COURSING.
7. FIRE RATED GLAZING SHALL NOT BE WIRED GLASS.
8. CONTRACTOR TO COORDINATE DOORS & FRAMES, WITH HARDWARE, SECURITY DEVICES, POWER AND RELATED ITEMS TO ENSURE COMPLETE INSTALLATION AND FUNCTIONAL OPERATION.

DOOR SCHEDULE ABBREVIATIONS

AL	=	ALUMINUM
DBL	=	DOUBLE DOORS
HM	=	HOLLOW METAL DOOR/ OR FRAME
X	=	INDICATES LABEL, CLOSER OR ELECT. LOCK IS INCLUDED
N/A	=	NOT APPLICABLE
STL	=	GALVANIZED STEEL
SC	=	SOLID CORE WOOD DOOR
CR	=	ACCESS CONTROL CARD READER
GL	=	GLAZING
G	=	GATE
SG	=	SLIDE GATE

DOOR SCHEDULE NOTES

1. ALL DOORS TO BE 1 3/4" UNLESS NOTED OTHERWISE.
2. FIELD VERIFY ALL DIMENSIONS.
3. PROVIDE PANIC HARDWARE. SEE SPECS, DOOR HARDWARE SECTION 8.71.00.
4. PROVIDE DOOR CLOSURE & LATCHING MECHANISM.

GLAZING MATERIAL TYPES

A. FLOAT OR PLATE GLASS; CLEAR; GLAZING QUALITY; 1/4" THICK MINIMUM.

B. SAFETY GLASS; CLEAR, FULLY TEMPERED; 1/4" THICK MINIMUM.

C. 1-5/16" LAMINATED / INSULATED BASIC LEVEL D / LARGE MISSILE HURRICANE IMPACT GLAZING, LOW "E"

D. FIRE RATED GLAZING

NOTE: REF SPECIFICATIONS FOR ADDITIONAL INFORMATION ON GLASS TYPES.

Architects Design Group

Architects and Planners

I.S.K. Reeves V, F.A.I.A.
Ian A. Reeves, A.I.A.
Susan Gantt A.I.A., LEED-AP

333 N. Knowles Ave.
Winter Park, Florida 32789
(407) 647-1706

Corporate Registration Number: BR1177

REGISTERED ARCHITECT IAN A. REEVES 22797 STATE OF TEXAS

06.05.2020

FIRE STATION NO.5

CITY OF LONGVIEW

100% BID SET

The architect hereby expressly reserves his common law copyright and other property rights in these drawings. These drawings shall not be reproduced without written permission and consent of the architect, nor are they to be assigned to any party without first obtaining written permission and consent.

REVISIONS/ADDENDA

Number	Description	Date Issued

SHEET TITLE:

DOOR SCHEDULES & NOTES

scale: 3/8" = 1'-0"
drawn: ADG DALLAS
checked: SB/MBV
approved: IAR
date: June 5, 2020

PROJECT NUMBER:

1006

SHEET NUMBER:

A-601

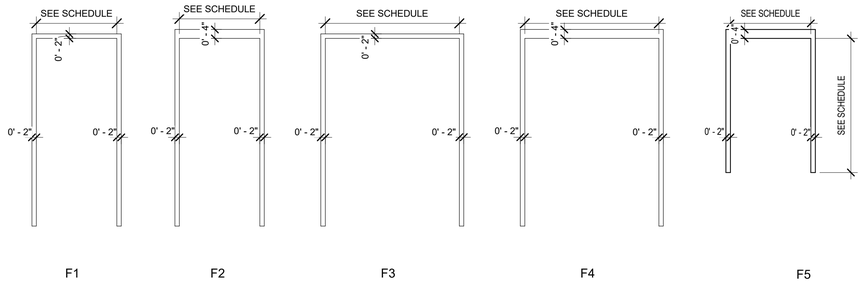

DOOR FRAME ELEVATIONS

3/8" = 1'-0"

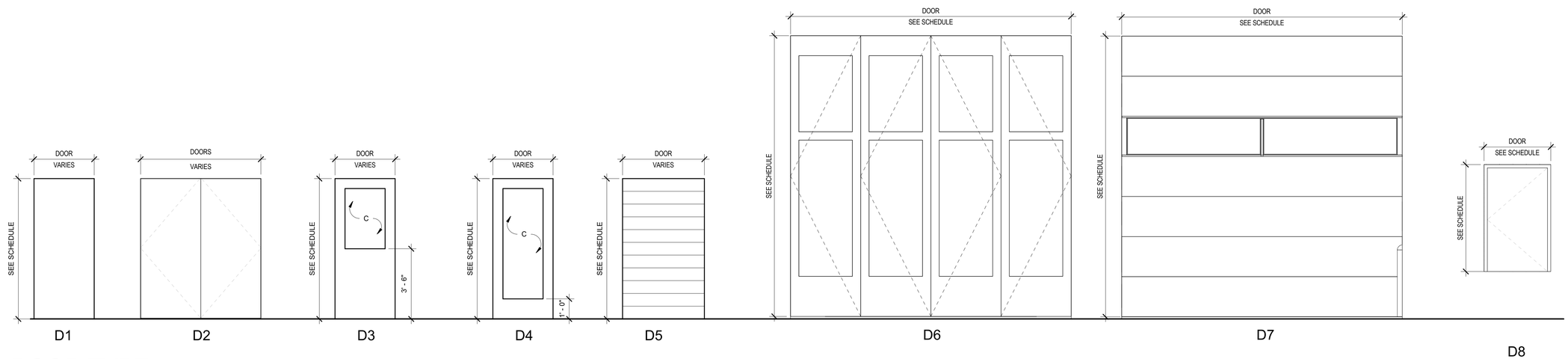

DOOR TYPE

3/8" = 1'-0"

Architects Design Group

Architects and Planners

I.S.K. Reeves V, F.A.I.A.
Ian A. Reeves, A.I.A.
Susan Gantt A.I.A., LEED-AP

333 N. Knowles Ave.
Winter Park, Florida 32789
(407) 647-1706

Corporate Registration
Number: BR1177

REGISTERED ARCHITECT
IAN A. REEVES
22797
STATE OF TEXAS
06.05.2020

FIRE STATION NO.5

CITY OF LONGVIEW

100% BID SET

The architect hereby expressly reserves his common law copyright and other property rights in these drawings. These drawings shall not be reproduced without written permission and consent of the architect, nor are they to be assigned to any party without first obtaining written permission and consent.

REVISIONS/ADDENDA

Number	Description	Date Issued

SHEET TITLE:

DOOR SCHEDULES & NOTES

scale: 3/8" = 1'-0"
drawn: ADG DALLAS
checked: SB/MBV
approved: IAR
date: June 5, 2020

PROJECT NUMBER:

1006

SHEET NUMBER:

A-602

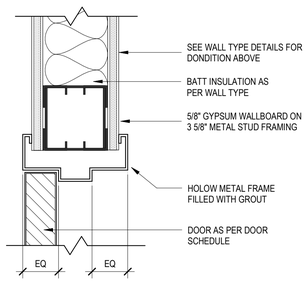

1 HM DOOR HEAD-INT
3" = 1'-0"

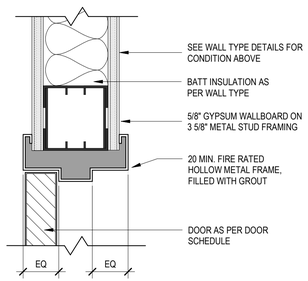

4 HM DOOR HEAD-INT.
3" = 1'-0"

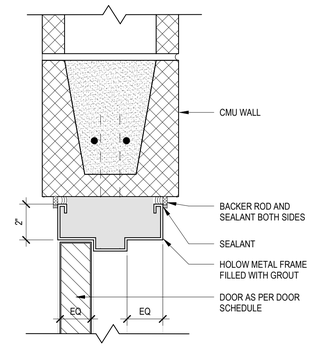

6 HM DOOR HEAD-INT
3" = 1'-0"

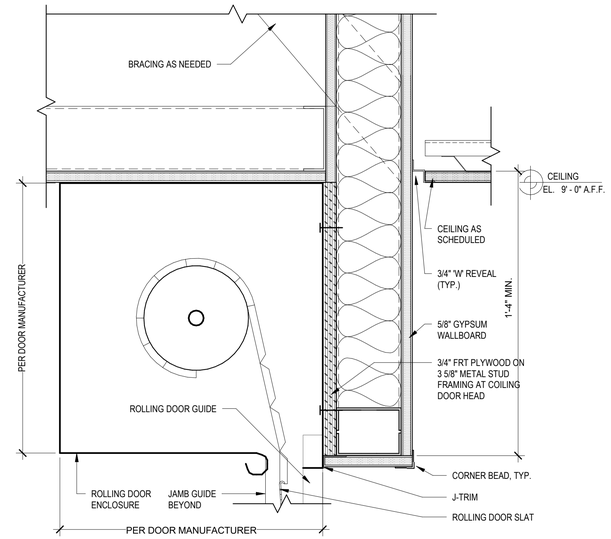

9 COILING DOOR HEAD
3" = 1'-0"

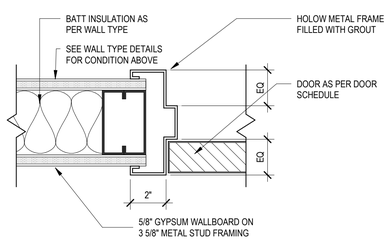

3 HM DOOR JAMB - INT.
3" = 1'-0"

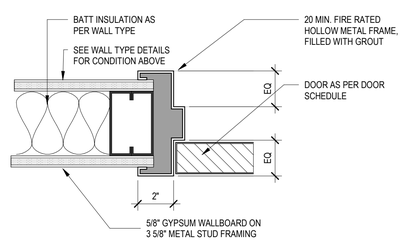

5 HM DOOR JAMB-INT.
3" = 1'-0"

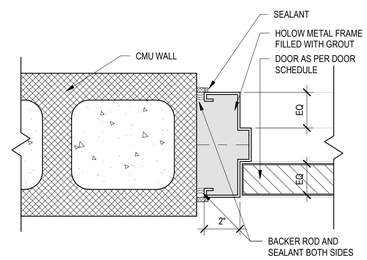

8 HM INT. DOOR JAMB
3" = 1'-0"

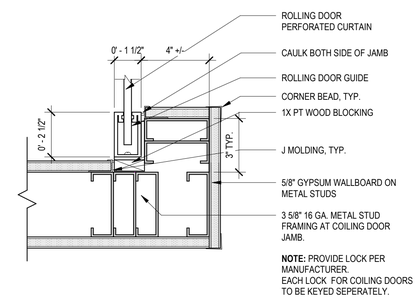

10 COILING DOOR JAMB
3" = 1'-0"

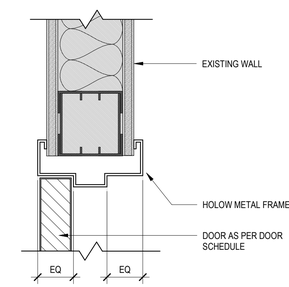

12 HM DOOR HEAD-INT ON EXISTING WALL
3" = 1'-0"

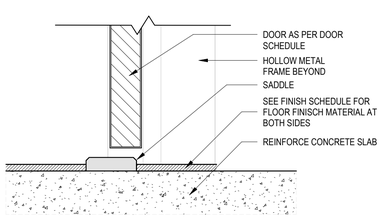

2 HM DOOR SILL- INT.
3" = 1'-0"

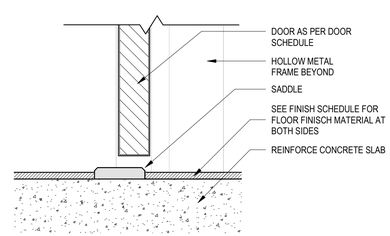

7 HM DOOR SILL-INT.
3" = 1'-0"

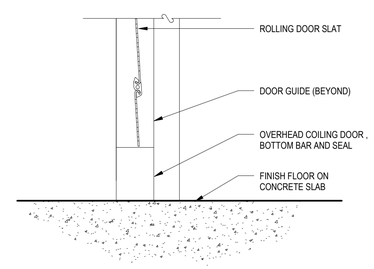

11 COILING DOOR SILL
3" = 1'-0"

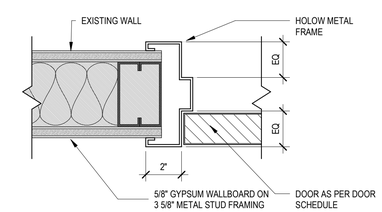

13 HM DOOR JAMB-INT ON EXISTING WALL
3" = 1'-0"

Architects Design Group

Architects and Planners
I.S.K. Reeves V, F.A.I.A.
Ian A. Reeves, A.I.A.
Susan Gantt A.I.A., LEED-AP

333 N. Knowles Ave.
Winter Park, Florida 32789
(407) 647-1706

Corporate Registration Number: BR1177

REGISTERED ARCHITECT IAN A. REEVES 22797 STATE OF TEXAS
06.05.2020

FIRE STATION NO.5

CITY OF LONGVIEW

100% BID SET

The architect hereby expressly reserves his common law copyright and other property rights in these drawings. These drawings shall not be reproduced without written permission and consent of the architect, nor are they to be assigned to any party without first obtaining written permission and consent.

REVISIONS/ADDENDA

Number	Description	Date Issued

SHEET TITLE:
DOOR DETAILS - INTERIOR

scale: 3" = 1'-0"
drawn: ADG DALLAS
checked: SB/MBV
approved: IAR
date: June 5, 2020
PROJECT NUMBER:
1006
SHEET NUMBER:
A-611

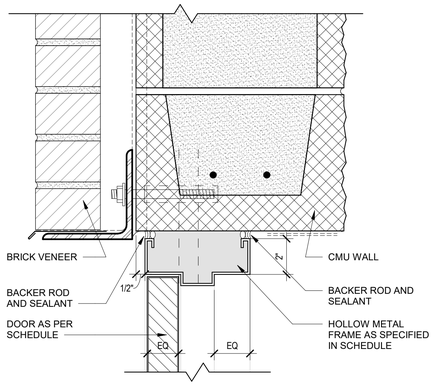

1 HM DOOR HEAD
3" = 1'-0"

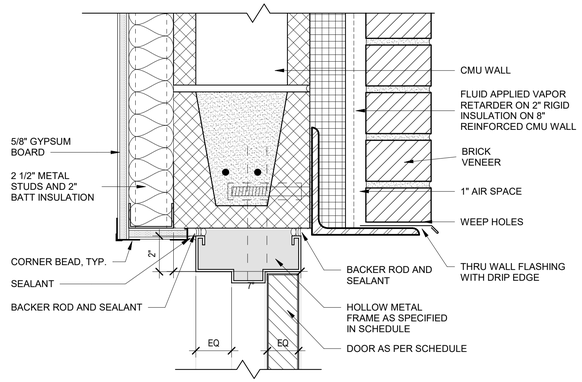

4 HM DOOR HEAD
3" = 1'-0"

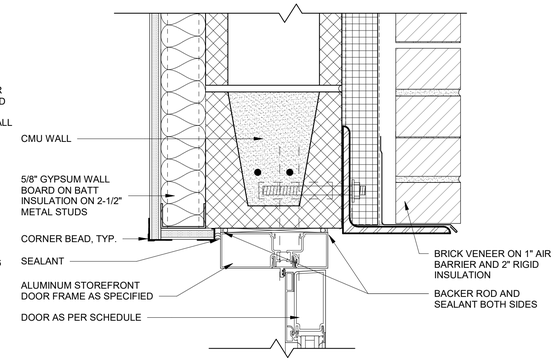

6 ALUMINUM DOOR HEAD
3" = 1'-0"

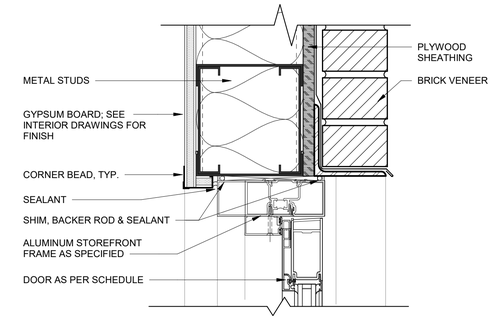

9 STOREFRONT DOOR HEAD
3" = 1'-0"

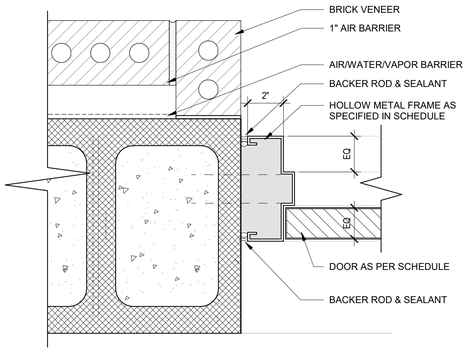

2 HM DOOR JAMB
3" = 1'-0"

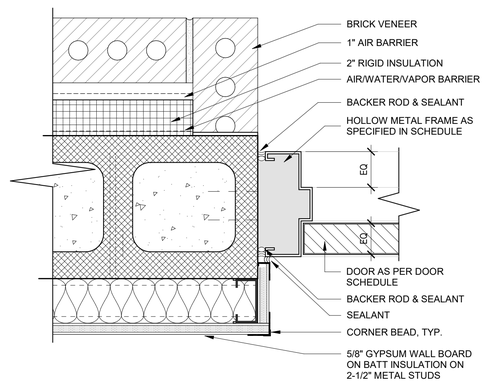

5 HM DOOR JAMB
3" = 1'-0"

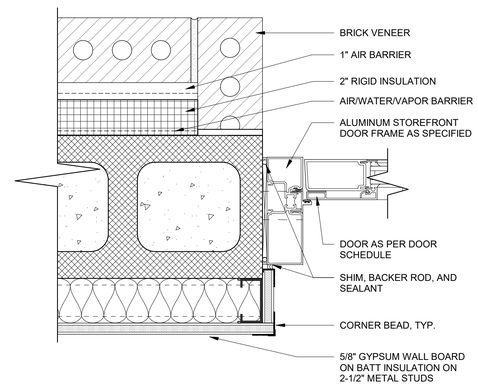

7 ALUMINUM DOOR JAMB
3" = 1'-0"

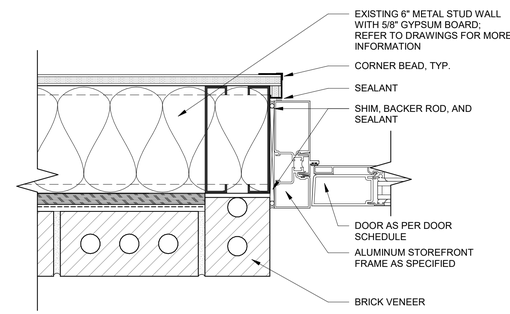

10 ALUMINUM DOOR JAMB
3" = 1'-0"

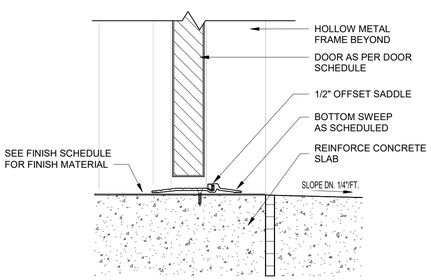

3 HM DOOR SILL
3" = 1'-0"

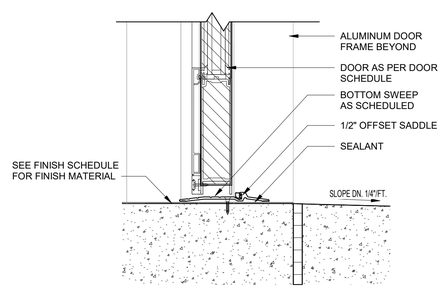

8 ALUMINUM DOOR SILL
3" = 1'-0"

Architects Design Group

Architects and Planners

I.S.K. Reeves V, F.A.I.A.
Ian A. Reeves, A.I.A.
Susan Gantt A.I.A., LEED-AP

333 N. Knowles Ave.
Winter Park, Florida 32789
(407) 647-1706

Corporate Registration
Number: BR1177

REGISTERED ARCHITECT
IAN A. REEVES
22797
STATE OF TEXAS
06.05.2020

FIRE STATION NO.5

CITY OF LONGVIEW

100% BID SET

The architect hereby expressly reserves his common law copyright and other property rights in these drawings. These drawings shall not be reproduced without written permission and consent of the architect, nor are they to be assigned to any party without first obtaining written permission and consent.

REVISIONS/ADDENDA

Number	Description	Date Issued

SHEET TITLE:

DOOR DETAILS - EXTERIOR

scale: 3" = 1'-0"
drawn: Author
checked: Checker
approved: Approver
date: June 5, 2020

PROJECT NUMBER:

1006

SHEET NUMBER:

A-612

INTERIOR FINISH ABBREVIATIONS

ACT	= ACOUSTICAL CEILING TILE	FF	= FACTORY FINISH	PTW	= PORCELAIN TILE, WALL
AF	= ACCESS FLOORING	FW	= FABRIC WALLCOVERING	QTZ	= QUARTZ
AFF	= ABOVE FINISHED FLOOR	GL	= GLASS	RP	= RESIN PANEL
AP	= ACRYLIC PANEL	GWB	= GYPSUM WALL BOARD	RT	= RESILIENT TILE
AWP	= ACOUSTIC WALL PANEL	GWT	= GLASS WALL TILE	RB	= RESILIENT BASE
CG	= CORNER GUARD	LD	= LAMINATED DOOR	RS	= ROLLER SHADE
CMU	= CONCRETE MASONRY UNIT	LVT	= VINYL TILE OR PLANK	SC	= SEALED CONCRETE, CLEAR FINISH
CONC	= CONCRETE	ML	= METAL LOCKERS	STSC	= STAINED & SEALED CONCRETE
CPT	= CARPET	MR	= MOISTURE-RESISTANT	SG	= SEMI-GLOSS
CTB	= CERAMIC TILE, BASE	MTL	= METAL	SR	= SYNTHETIC RESINOUS PADDING FINISH
CTF	= CERAMIC TILE, FLOOR	N/A	= NOT APPLICABLE	SS	= STAINLESS STEEL
CTW	= CERAMIC TILE, WALL	OWP	= OPERABLE WALL PARTITION	ST	= STAIN
DEW	= DRY ERASE WALLCOVERING	P	= PAINT	STN	= STONE
DR	= DOOR	PE	= PAINT, EPOXY	SOS	= SOLID SURFACE
ESD	= ELECTROSTATIC-DISSIPATIVE	PL	= PLASTIC LAMINATE	TP	= TOILET PARTITION
ESF	= EPOXY SHOP FLOOR	PM	= PAINT, ON METAL	TW	= TACKABLE WALLCOVERING
EF	= EPOXY FLOOR	PP	= POLISHED PLASTER	VCT	= VINYL COMPOSITION TILE
EB	= EPOXY BASE	PS	= PAINT, SPECIAL- EPOXY	WD	= WOOD DOOR
ELEV	= ELEVATOR CAB	PTB	= PORCELAIN TILE, BASE	WG	= WALL GUARD
EXP	= EXPOSED	PTF	= PORCELAIN TILE, FLOOR	WP	= WALL PANEL

NOTE: NOT ALL ABBREVIATIONS ARE SPECIFIC TO THIS JOB.

GENERAL FINISH NOTES

1. AT ALL INTERIOR RESTROOMS, START WALL TILE INSTALLATION WITH A FULL TILE AT CEILING AND WORK DOWN TOWARD BASE.
2. ALIGN WALL AND BASE TILE JOINTS WITH FLOOR TILE JOINTS.
3. ALL PAINT TO HAVE SATIN FINISH U.N.O. ON FINISH SCHEDULE. PAINT FINISH TO BE SEMI-GLOSS @ WET LOCATIONS (BREAK ALCOVES, JANITOR CLOSETS, KITCHENS, SINKS, SHOWER CEILINGS).
4. GWB CEILINGS (HORIZONTAL SURFACE) TO HAVE FLAT FINISH U.N.O. ON FINISH LEGEND / SCHEDULE. GWB SOFFITS (VERTICAL SURFACE) TO MATCH SPECIFIED PAINT ON WALL BEYOND U.N.O ON FINISH SCHEDULE, WALL FINISH PLANS, OR ELEVATIONS.

INTERIOR ELEVATION, MILLWORK & GENERAL NOTES

1. PROVIDE FIRE-RATED WOOD BLOCKING AT ALL CABINETS, COUNTER, WALL-MOUNTED ACCESSORIES, ETC. AS NECESSARY
2. PROVIDE 1.5" SCRIBE WHERE CABINETRY MEETS PERPENDICULAR WALL UNLESS NOTED OTHERWISE
3. PROVIDE 4" HIGH TOE KICK AT ALL BASE CABINETS
4. PROVIDE PLASTIC WIRE ACCESS GROMMETS WITH RAISED EDGE AND REMOVABLE CAP THAT COMPLETELY COVERS THE GROMMET LINER.
   GROMMET TO BE 2.5" DIAMETER. COLOR TO BE FLAT BLACK, U.N.O.
   INSTALLATION TO BE AT EVERY 24" O.C. AT OPEN BELOW WORKSURFACES AND CENTERLINE SHALL BE 3.25" FROM WORKSURFACE BACK EDGE.
   FINAL GROMMET HOLE LOCATIONS TO BE DRILLED ON-SITE AS DETERMINED BY ARCHITECT.

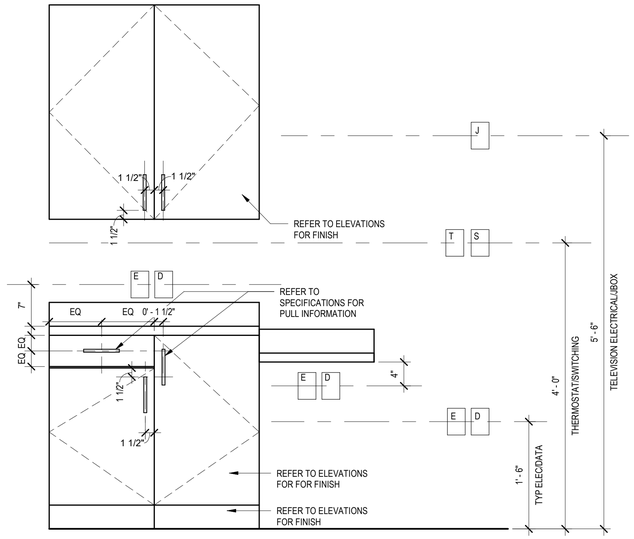

TYPICAL ELECTRICAL OUTLET & PULL INSTALLATION

1 — 1" = 1'-0"

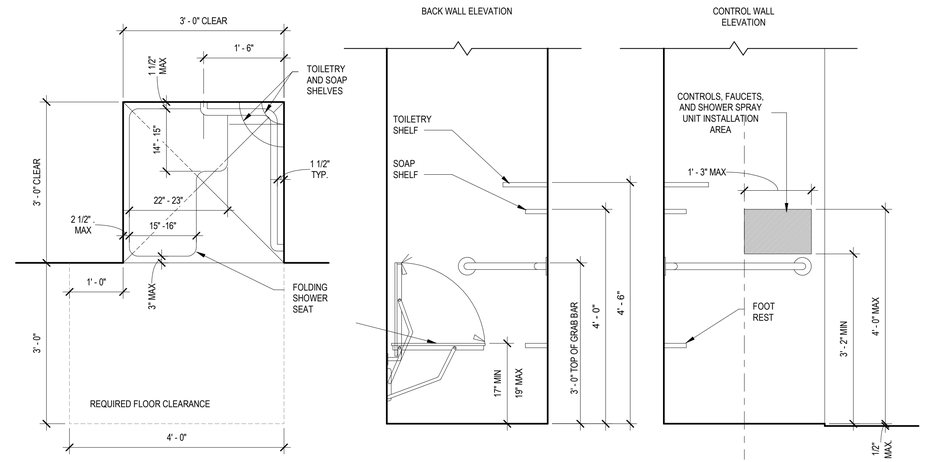

TYPICAL SHOWER INSTALLATION

2 — 3/4" = 1'-0"

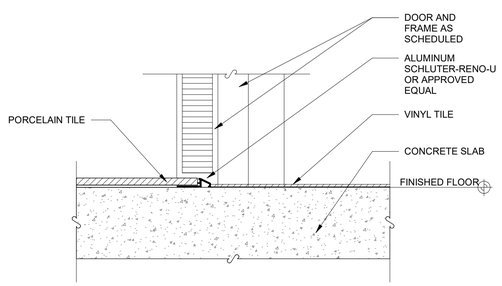

FLOOR TRANSITION - PORCELAIN TILE TO VINYL TILE

3 — 3" = 1'-0"

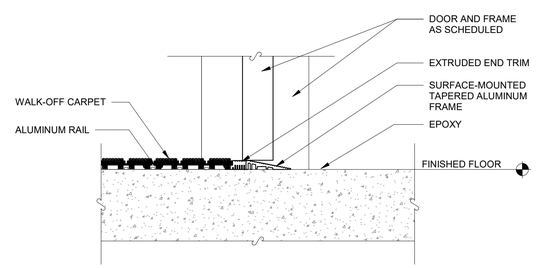

FLOOR TRANSITION - WALK-OFF CARPET TO EPOXY

4 — 3" = 1'-0"

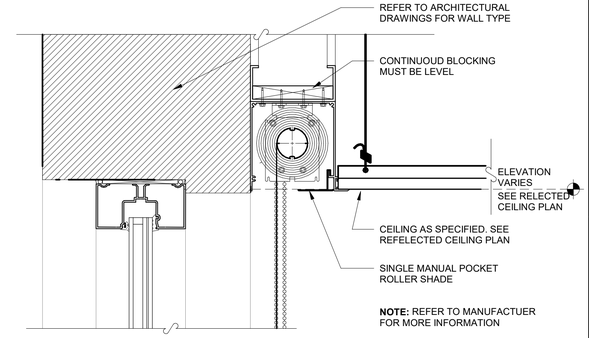

SINGLE MANUAL SHADE: POCKET MOUNTED WITHIN ACT CEILING

7 — 3" = 1'-0"

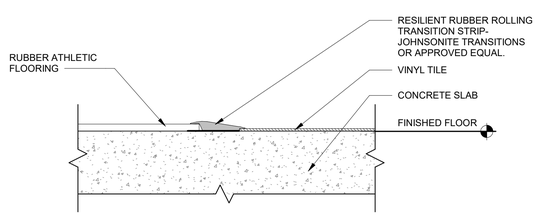

FLOOR TRANSITION - VINYL TILE TO RAF

5 — 3" = 1'-0"

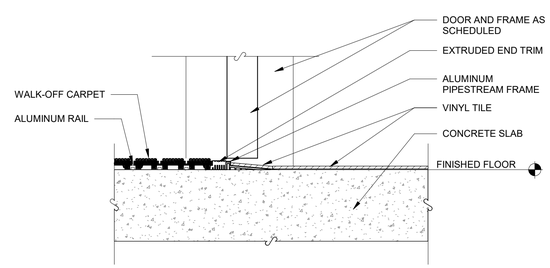

FLOOR TRANSITION - WALK-OFF CARPET TO VINYL TILE

6 — 3" = 1'-0"

Architects Design Group

Architects and Planners

I.S.K. Reeves V, F.A.I.A.
Ian A. Reeves, A.I.A.
Susan Gantt A.I.A., LEED-AP

333 N. Knowles Ave.
Winter Park, Florida 32789
(407) 647-1706

Corporate Registration Number: BR1177

REGISTERED ARCHITECT — IAN A. REEVES — 22797 — STATE OF TEXAS

06.05.2020

FIRE STATION NO.5

CITY OF LONGVIEW

100% BID SET

The architect hereby expressly reserves his common law copyright and other property rights in these drawings. These drawings shall not be reproduced without written permission and consent of the architect, nor are they to be assigned to any party without first obtaining written permission and consent.

REVISIONS/ADDENDA

Number	Description	Date Issued

SHEET TITLE:

GENERAL FINISH NOTES & ELEVATIONS

scale: As indicated
drawn: NG
checked: GG
approved: MBV
date: June 5, 2020

PROJECT NUMBER:

1006

SHEET NUMBER:

ID-001

FLOOR FINISH LEGEND

- PTF-1 = PORCELAIN TILE
- PTF-2 = PORCELAIN TILE
- CPT-1 = WALK-OFF CARPET
- LVT-1 = VINYL TILE
- RAF-1 = RUBBER ATHLETIC FLOORING
- EF-1 = EPOXY FLOOR
- SC-1 = SEALED CONCRETE
- EXISTING

WALL FINISH & WINDOW TREATMENT LEGEND

CG — CORNER GUARD

RS-1 — SINGLE SOLAR SHADE, MANUAL

WALL FINISH & WINDOW TREATMENT GENERAL NOTES

1. ALL EXPOSED STRUCTURE AND COLUMNS TO BE PAINTED PER 099100, REFER TO INTERIOR FINISH LEGEND, SHEET ID-402, FOR SPECIFICATIONS.
2. PROVIDE CORNER GUARDS AT ALL OUTSIDE CORNERS IN MAIN CORRIDORS. REFER TO INTERIOR FINISH LEGEND FOR FOR SPECIFICATIONS.
3. REFER TO INTERIOR FINISH PLAN AND LEGEND FOR TYPES AND LOCATIONS OF ALL ROLLER SHADES. UNLESS NOTED OTHERWISE:
   REFER TO SHEET ID-001 FOR ROLLER SHADE MOUNTING DETAILS. REFER TO INTERIOR FINISH LEGEND AND SPECIFICATIONS FOR ROLLER SHADE FABRIC BASIS OF DESIGN.

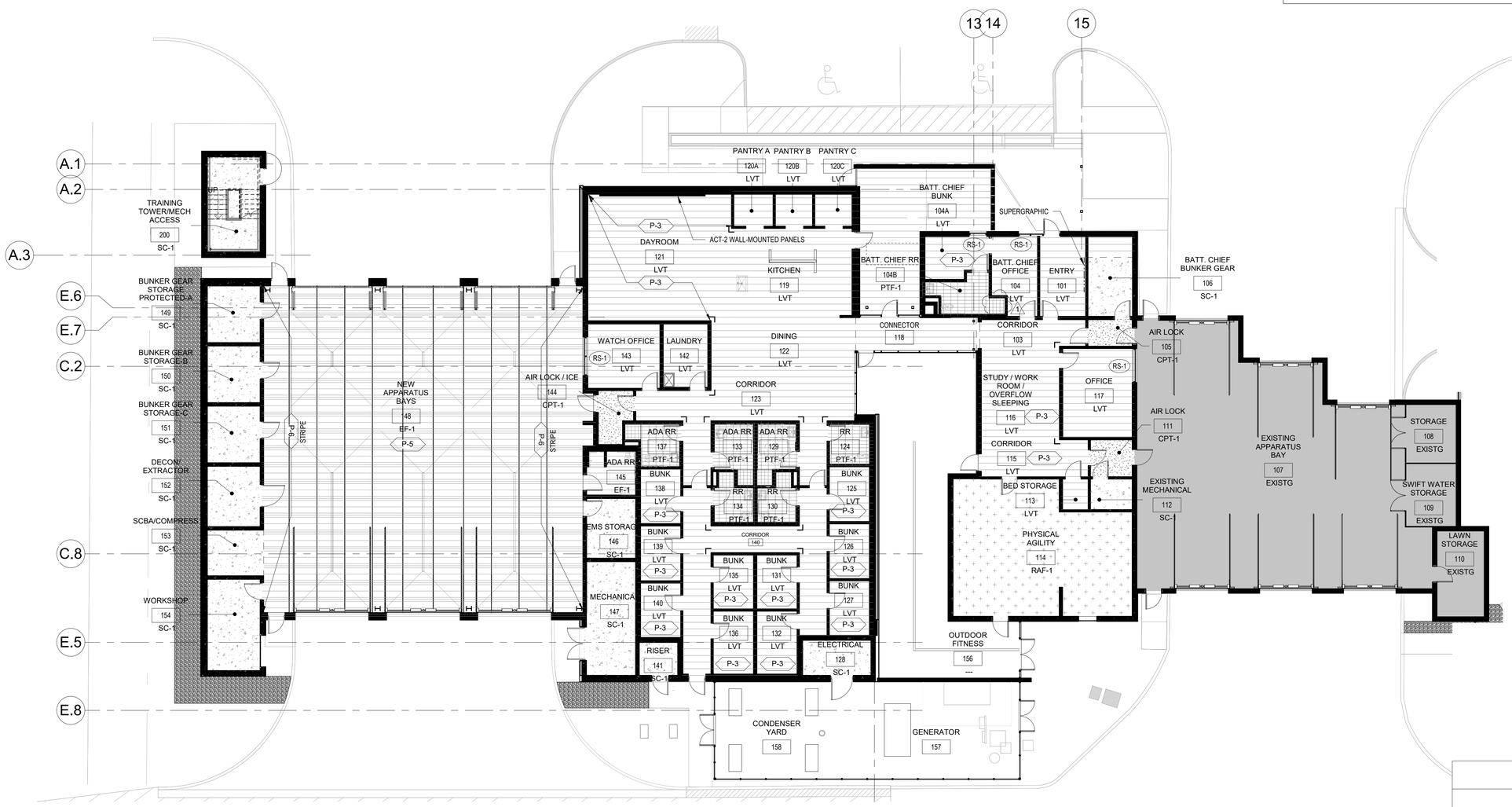

1 FIRST FLOOR WALL AND FLOOR FINISH PLAN
3/32" = 1'-0"

KEY PLAN

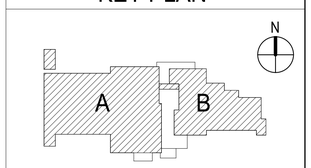

Architects Design Group

Architects and Planners

I.S.K. Reeves V, F.A.I.A.
Ian A. Reeves, A.I.A.
Susan Gantt A.I.A., LEED-AP

333 N. Knowles Ave.
Winter Park, Florida 32789
(407) 647-1706

Corporate Registration Number: BR1177

REGISTERED ARCHITECT IAN A. REEVES 22797 STATE OF TEXAS
06.05.2020

FIRE STATION NO.5

CITY OF LONGVIEW

100% BID SET

The architect hereby expressly reserves his common law copyright and other property rights in these drawings. These drawings shall not be reproduced without written permission and consent of the architect, nor are they to be assigned to any party without first obtaining written permission and consent.

REVISIONS/ADDENDA

Number	Description	Date Issued
1	Revision 1	Date 1

SHEET TITLE:

FIRST FLOOR FINISH PLAN

scale: As indicated
drawn: NG
checked: GG
approved: MBV
date: June 5, 2020

PROJECT NUMBER:

1006

SHEET NUMBER:

ID-101

RESTROOM ACCESSORY ELEVATIONS

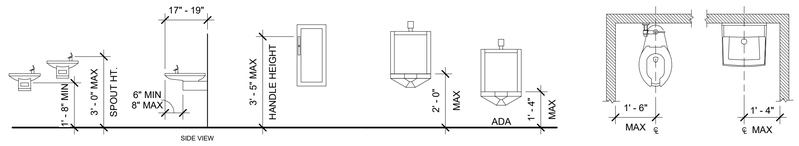

DRINKING FOUNTAINS

FIRE EXTINGUISHER CABINET

URINAL MOUNTING HEIGHTS

ADA TYPICAL MOUNTING DIMENSIONS

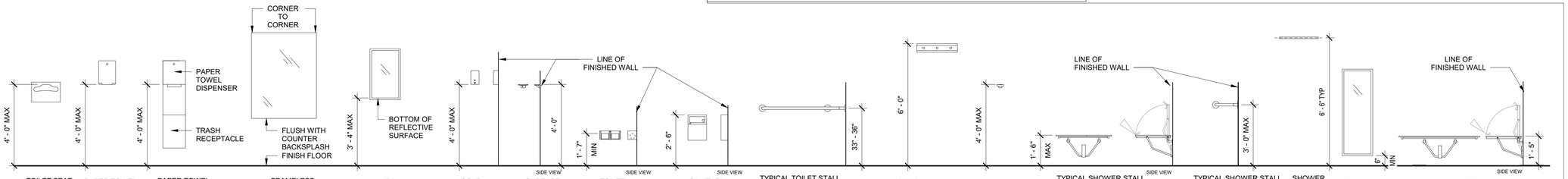

TOILET SEAT COVER DISPENSER | PAPER TOWEL DISPENSER | PAPER TOWEL DISPENSER & TRASH RECEPTACLE | FRAMELESS MIRROR | ADA COMPLIANT LAVATORY MIRROR | SOAP DISPENSER | SURFACE MOUNTED SOAP DISH | TOILET PAPER DISPENSER | SANITARY DISPOSAL | TYPICAL TOILET STALL ELEVATION | WALL MOUNTED HOOK BAR | DOUBLE ROBE HOOK | TYPICAL SHOWER STALL ELEVATION | TYPICAL SHOWER STALL ELEVATION | SHOWER CURTAIN ROD | FULL-HEIGHT MIRROR | WALL MOUNTED FOLDING BENCH 20" D X 48" W, 17" MOUNTING HEIGHT

RESTROOM GENERAL NOTES

1. REFER TO SHEET ID-201FOR TOILET ACCESSORIES LEGEND AND MOUNTING HEIGHT.
2. REFER TO SHEETS A.131 AND A.132 FOR ENLARGED PLANS OF ALL TOILET ROOMS.
3. PROVIDE WOOD BLOCKING AROUND WATER CLOSETS & SHOWERS AND AT ALL GRAB BARS & SHOWER SEATS.
4. PROVIDE ADA PIPE SHROUD AT ALL EXPOSED PIPE LOCATIONS UNDER SINKS, LAVATORIES, ETC.
5. PROVIDE DOUBLE ROBE HOOK AT ALL TOILET PARTITION DOORS (INSIDE STALL), TYPICAL.
6. TILE SHOWN FOR REPRESENTATION ONLY.
7. REFER TO SHEET ID-201, ELEVATIONS 1, 2 AND 3 FOR TYPICAL PAINT AND TILE LAYOUT AT RESTROOMS.

RESTROOM ACCESSORIES SCHEDULE

A.1	SEAT COVER DISPENSER, SURFACE-MOUNTED	BOBRICK B-4221, CLASSIC SERIES	A.15	ADA SHOWER BAR, 16" X 30", 1 1/2" DIAMETER, 'L' SHAPE	BOBRICK B-6861
A.2	PAPER TOWEL DISPENSER, SURFACE-MOUNTED / TOWEL MATE	BOBRICK B-35903 / -130, CLASSIC SERIES	A.16	ADA SHOWER BAR, 24" X 36", 1 1/2" DIAMETER, 'L' SHAPE	BOBRICK B-68616
A.3	PAPER TOWEL DISPENSER & TRASH RECEPTACLE, SEMI-RECESSED - (12 GALLON WASTE) / TOWEL MATE / LINER MATE	BOBRICK B-38032 / -130 /-134, CLASSIC SERIES	A.17	NOT USED	
A.4	PAPER TOWEL DISPENSER AND WASTE RECEPTACLE, RECESSED	BOBRICK B-38034	A.18	FOLDING WALL-MOUNTED ADA BENCH WITH DROP-DOWN LEGS, 16" D x 32" W	TEAKWORKS4U TBF2-320160W
A.5	FRAMELESS MIRROR (SEE INTERIOR DRAWINGS FOR WIDTH AND HEIGHT)	BRADLEY MODEL 747	A.19	HEAVY-DUTY SHOWER CURTAIN ROD W/ VINYL SHOWER CURTAIN AND CURTAIN HOOKS, TYPICAL EACH SHOWER	BOBRICK B-6107 / 204-X
A.6	SOAP DISPENSER, WALL-MOUNTED	BOBRICK B-2111, CLASSIC SERIES	A.20	PIPING SHROUD	
A.7	TOILET TISSUE DISPENSER, SURFACE-MOUNTED, DUAL ROLL	BOBRICK B-2888, CLASSIC SERIES	A.21	FRAMED MIRROR	BOBRICK B-293 1836
A.8	TOILET GRAB BAR, 42" x 54", L-SHAPE	BOBRICK B-6897	A.22	CAST STONE CORNER SHOWER SHELF, 'METRO LUGGED', 10" DEEP, POLISHED WHITE, MOUNTING HEIGHT: 54" AFF	QUESTECH SBA 117-13
A.9	SHOWER GRAB BAR, STRAIGHT, 30" LONG, 1 1/2" DIAMETER	BOBRICK B-6806 X 30	A.23	CAST STONE CORNER SHOWER SHELF, 'METRO RETROFIT', 5" DEEP, POLISHED WHITE, MOUNTING HEIGHT: 48" AFF	QUESTECH SBA 157-13
A.10	DOUBLE ROBE HOOK	BOBRICK B-672	A.24	CAST STONE CORNER SHOWER SHELF, 'METRO RETROFIT', 5" DEEP, POLISHED WHITE, MOUNTING HEIGHT: 18" AFF	QUESTECH SBA 159-13
A.11	WASTE RECEPTACLE, RECESSED - (12 GALLON WASTE) / LINER MATE	BOBRICK B-3644 / 134	A.25	SHOWER GRAB BAR, STRAIGHT, 18" LONG, 1 1/2" DIAMETER, INSTALL VERTICAL	BOBRICK B-6806 X 18
A.12	WASTE RECEPTACLE WITH LINERMATE, SURFACE-MOUNTED - (12 GALLON WASTE)	BOBRICK B-277			
A.13	MOP/BROOM HOLDER, WALL-MOUNTED, HOLDS 3 MOPS	BOBRICK B-223 X 24			
A.14	FOLDING ADA SHOWER SEAT, 20" X 33", REVERSIBLE	BOBRICK B-5181			

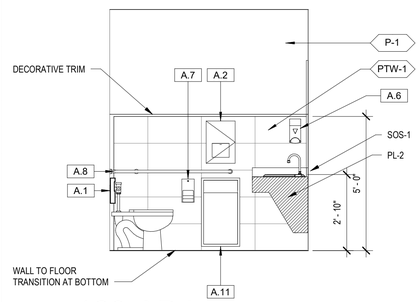

1 129 ADA RESTROOM - NORTH
3/8" = 1'-0"

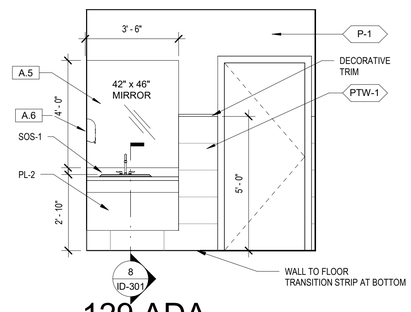

2 129 ADA RESTROOM - EAST
3/8" = 1'-0"

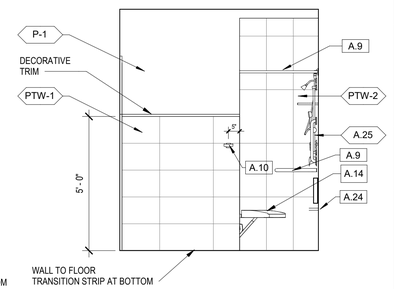

3 129 ADA RESTROOM - SOUTH
3/8" = 1'-0"

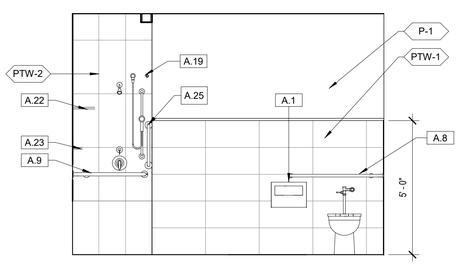

4 129 ADA RESTROOM - WEST
3/8" = 1'-0"

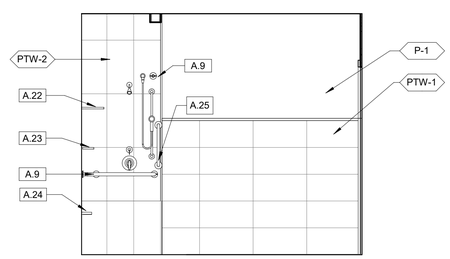

5 137 ADA RESTROOM - NORTH
3/8" = 1'-0"

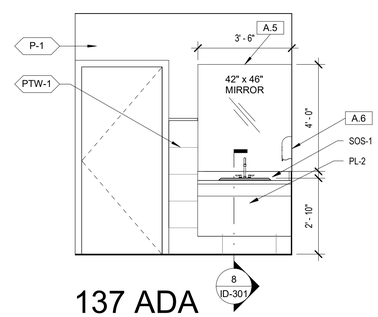

6 137 ADA RESTROOM - EAST
3/8" = 1'-0"

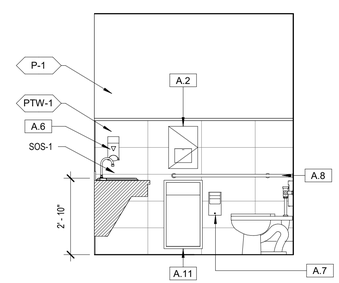

7 137 ADA RESTROOM - SOUTH
3/8" = 1'-0"

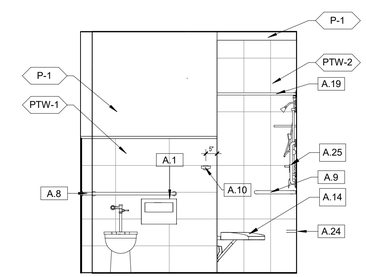

8 137 ADA RESTROOM - WEST
3/8" = 1'-0"

Architects Design Group

Architects and Planners

I.S.K. Reeves V, F.A.I.A.
Ian A. Reeves, A.I.A.
Susan Gantt A.I.A., LEED-AP

333 N. Knowles Ave.
Winter Park, Florida 32789
(407) 647-1706

Corporate Registration
Number: BR1177

REGISTERED ARCHITECT IAN A. REEVES 22797 STATE OF TEXAS

06.05.2020

FIRE STATION NO.5

CITY OF LONGVIEW

100% BID SET

The architect hereby expressly reserves his common law copyright and other property rights in these drawings. These drawings shall not be reproduced without written permission and consent of the architect, nor are they to be assigned to any party without first obtaining written permission and consent.

REVISIONS/ADDENDA

Number	Description	Date Issued

SHEET TITLE:

INTERIOR ELEVATIONS

scale: As indicated
drawn: NG
checked: GG
approved: MBV
date: June 5, 2020

PROJECT NUMBER:

1006

SHEET NUMBER:

ID-201

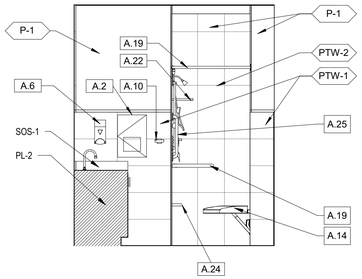

1 130 RESTROOM - NORTH
3/8" = 1'-0"

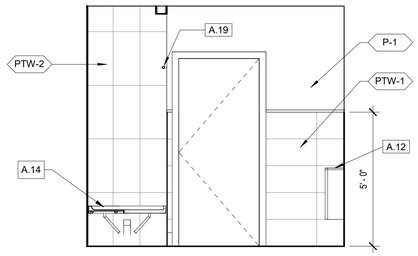

2 130 RESTROOM - EAST
3/8" = 1'-0"

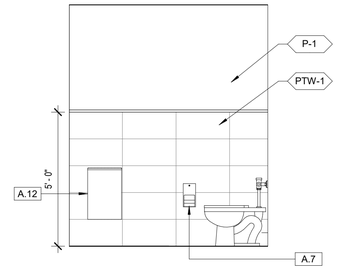

3 130 RESTROOM - SOUTH
3/8" = 1'-0"

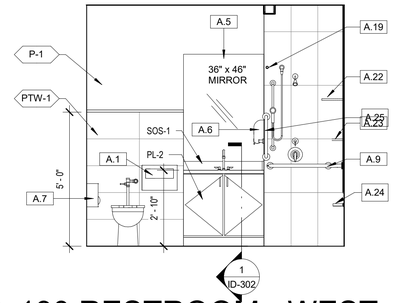

4 130 RESTROOM - WEST
3/8" = 1'-0"

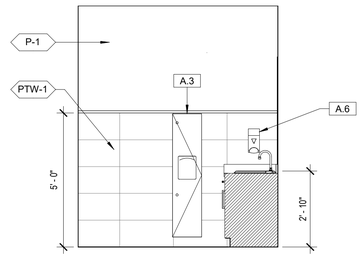

5 124 RESTROOM - NORTH
3/8" = 1'-0"

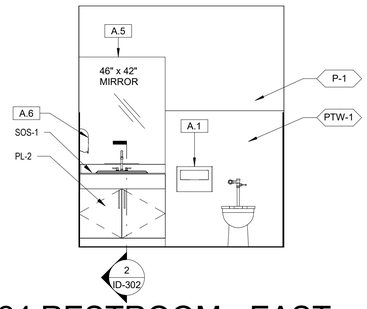

6 124 RESTROOM - EAST
3/8" = 1'-0"

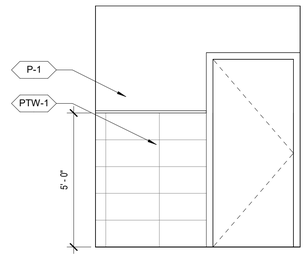

7 124 RESTROOM - WEST
3/8" = 1'-0"

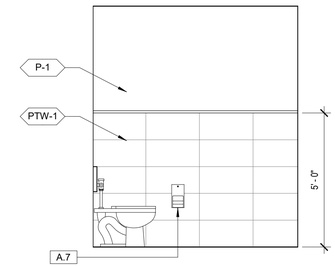

8 124 RESTROOM - SOUTH
3/8" = 1'-0"

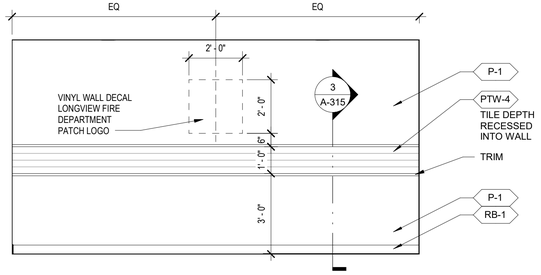

9 101 PUBLIC ENTRY - EAST
3/8" = 1'-0"

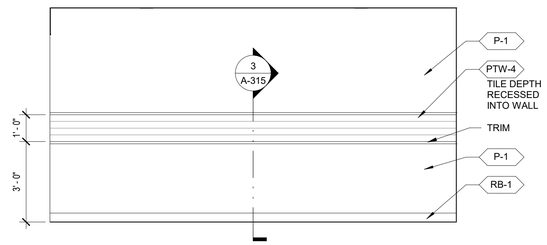

10 101 PUBLIC ENTRY - WEST
3/8" = 1'-0"

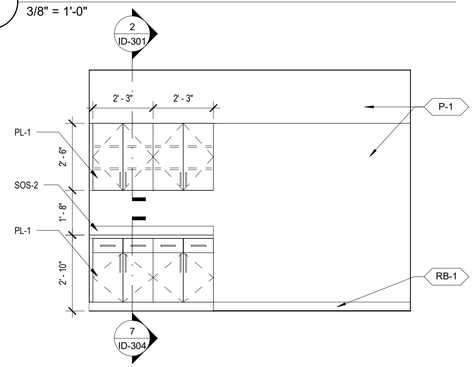

11 136 LAUNDRY - EAST
3/8" = 1'-0"

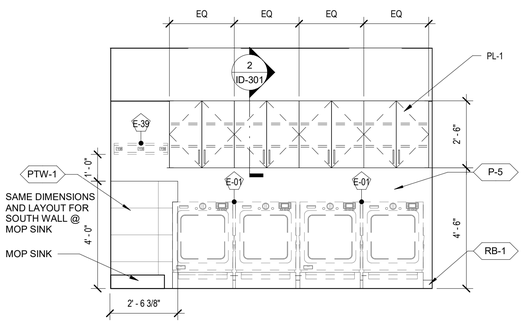

12 142 LAUNDRY - WEST
3/8" = 1'-0"

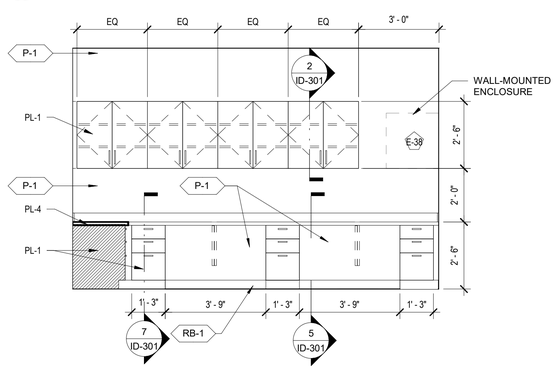

13 143 WATCH OFFICE - NORTH
3/8" = 1'-0"

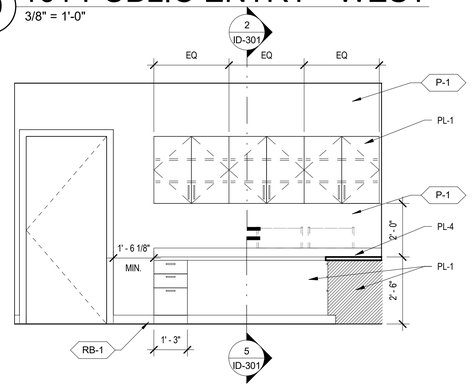

14 143 WATCH OFFICE - SOUTH
3/8" = 1'-0"

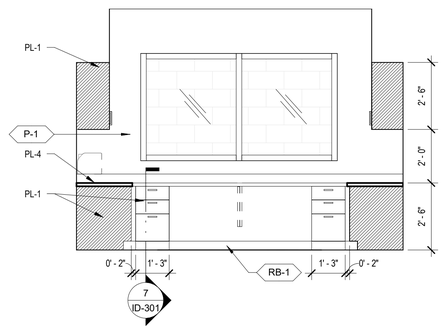

15 143 WATCH OFFICE - WEST
3/8" = 1'-0"

Architects Design Group

Architects and Planners

I.S.K. Reeves V, F.A.I.A.
Ian A. Reeves, A.I.A.
Susan Gantt A.I.A., LEED-AP

333 N. Knowles Ave.
Winter Park, Florida 32789
(407) 647-1706

Corporate Registration
Number: BR1177

REGISTERED ARCHITECT
IAN A. REEVES
22797
STATE OF TEXAS
06.05.2020

FIRE STATION NO.5

CITY OF LONGVIEW

100% BID SET

The architect hereby expressly reserves his common law copyright and other property rights in these drawings. These drawings shall not be reproduced without written permission and consent of the architect, nor are they to be assigned to any party without first obtaining written permission and consent.

REVISIONS/ADDENDA

Number	Description	Date Issued

SHEET TITLE:

INTERIOR ELEVATIONS

scale: 3/8" = 1'-0"
drawn: NG
checked: GG
approved: MBV
date: June 5, 2020

PROJECT NUMBER:

1006

SHEET NUMBER:

ID-202

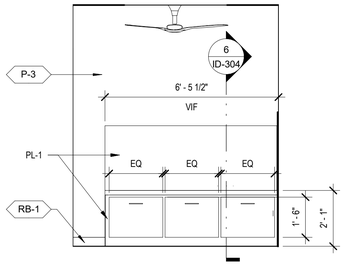

139 BUNK - SOUTH / TYPICAL

1 3/8" = 1'-0"

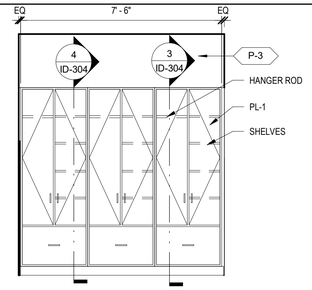

139 BUNK - NORTH / TYPICAL

2 3/8" = 1'-0"

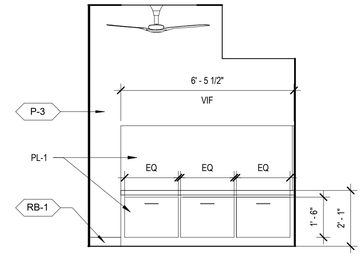

139 BUNK - SOUTH / NOT TYPICAL

3 3/8" = 1'-0"

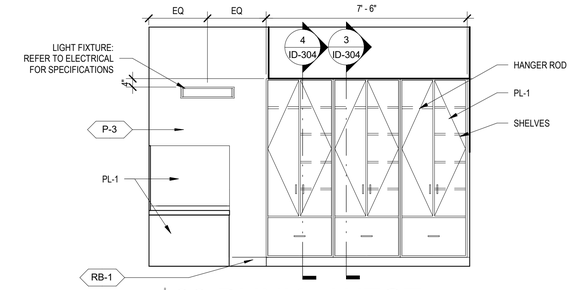

139 BUNK - WEST / NOT TYPICAL

4 3/8" = 1'-0"

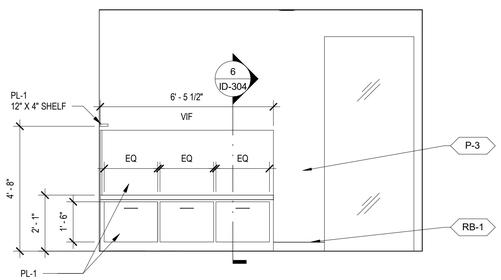

104A BATTALION CAPTAIN BUNK - NORTH

5 3/8" = 1'-0"

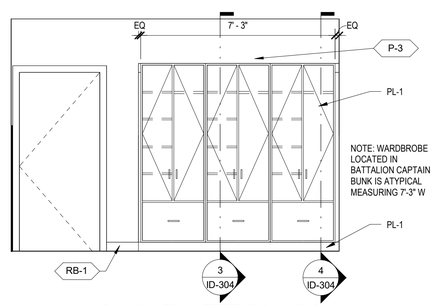

104A BATTALION CAPTAIN BUNK - SOUTH

6 3/8" = 1'-0"

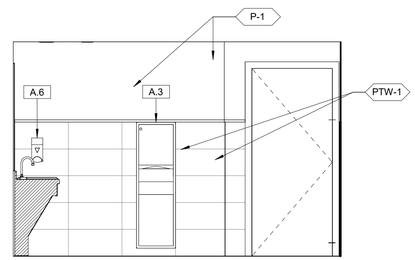

104B BATTALION CHIEF RESTROOM - N

7 3/8" = 1'-0"

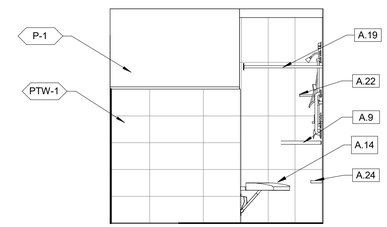

104B BATTALION CAPTAIN RESTROOM - E

8 3/8" = 1'-0"

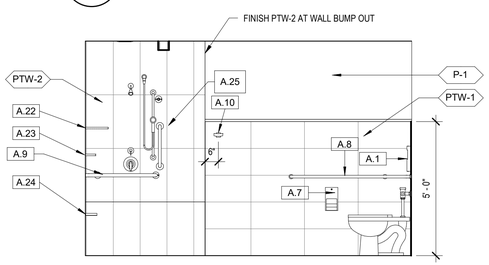

104B BATTALION CAPTAIN RESTROOM - S

9 3/8" = 1'-0"

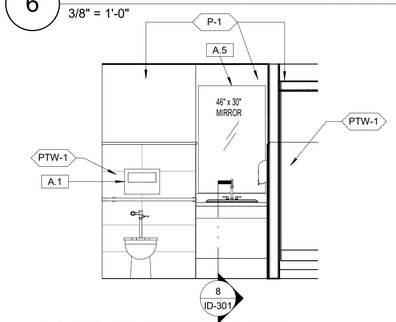

104B BATTALION CAPTAIN RESTROOM - W

10 3/8" = 1'-0"

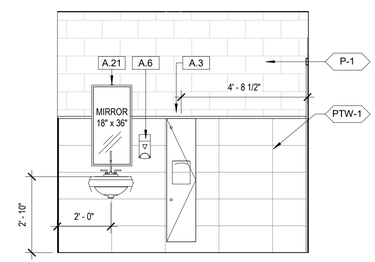

145 ADA RESTROOM - S

11 3/8" = 1'-0"

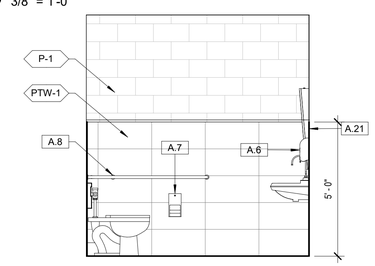

145 ADA RESTROOM - E

12 3/8" = 1'-0"

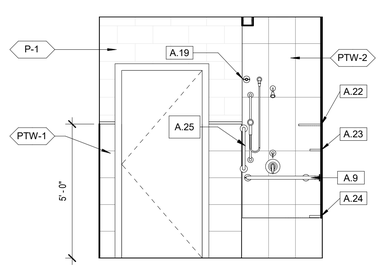

145 ADA RESTROOM - W

13 3/8" = 1'-0"

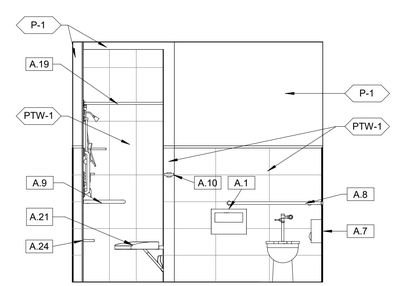

145 ADA RESTROOM - N

14 3/8" = 1'-0"

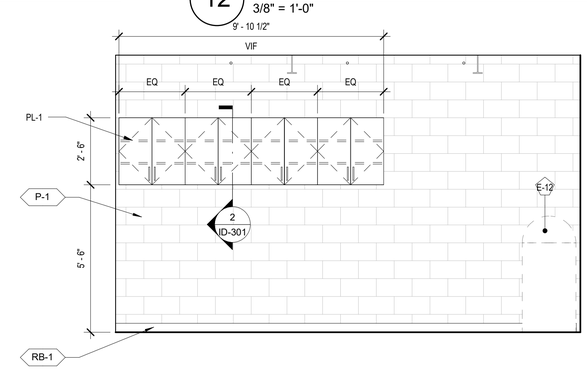

154 WORKSHOP - WEST

15 3/8" = 1'-0"

Architects Design Group

Architects and Planners

I.S.K. Reeves V, F.A.I.A.
Ian A. Reeves, A.I.A.
Susan Gantt A.I.A., LEED-AP

333 N. Knowles Ave.
Winter Park, Florida 32789
(407) 647-1706

Corporate Registration
Number: BR1177

REGISTERED ARCHITECT IAN A. REEVES 22797 STATE OF TEXAS
06.05.2020

FIRE STATION NO.5

CITY OF LONGVIEW

100% BID SET

The architect hereby expressly reserves his common law copyright and other property rights in these drawings. These drawings shall not be reproduced without written permission and consent of the architect, nor are they to be assigned to any party without first obtaining written permission and consent.

REVISIONS/ADDENDA

Number	Description	Date Issued

SHEET TITLE:

INTERIOR ELEVATIONS

scale: 3/8" = 1'-0"
drawn: NG
checked: GG
approved: MBV
date: June 5, 2020

PROJECT NUMBER:

1006

SHEET NUMBER:

ID-203

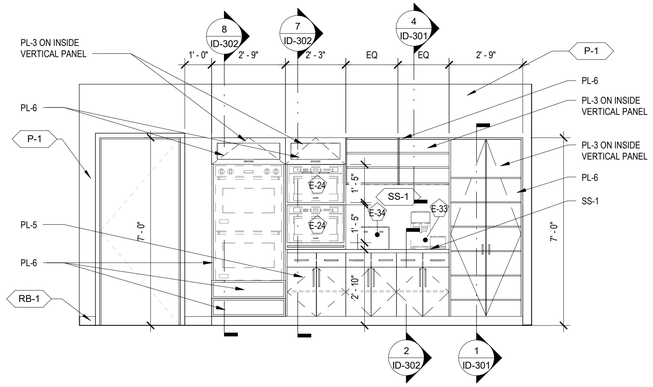

1 119 KITCHEN - EAST
3/8" = 1'-0"

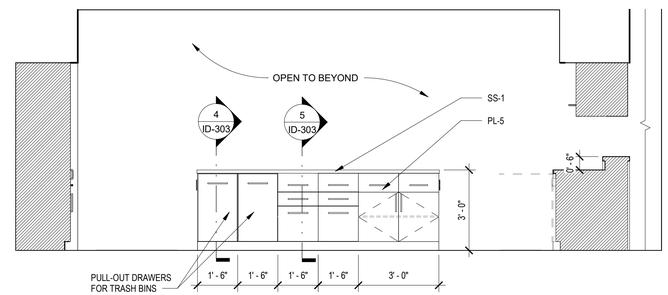

2 119 KITCHEN - SOUTH
3/8" = 1'-0"

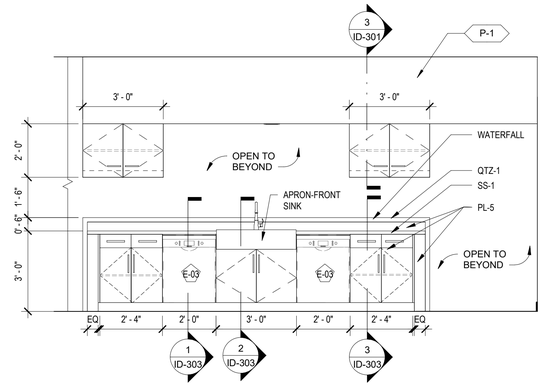

3 119 KITCHEN - WEST
3/8" = 1'-0"

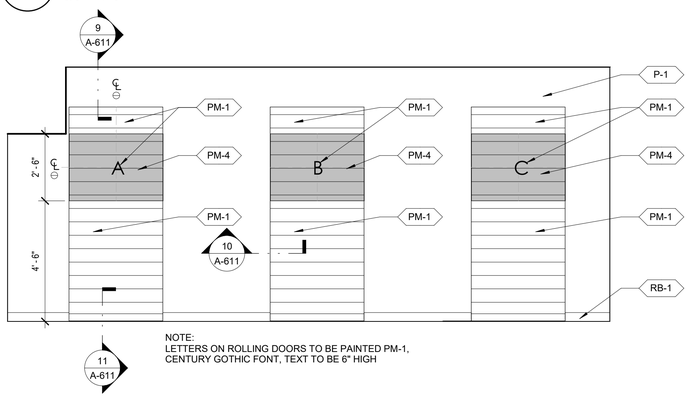

4 119 KITCHEN - NORTH
3/8" = 1'-0"

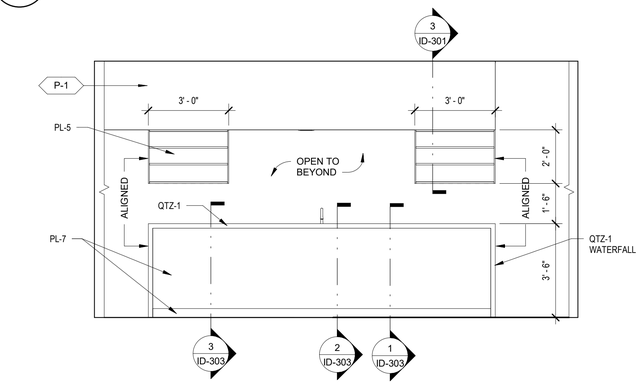

5 119 KITCHEN LONG COUNTER - EAST
3/8" = 1'-0"

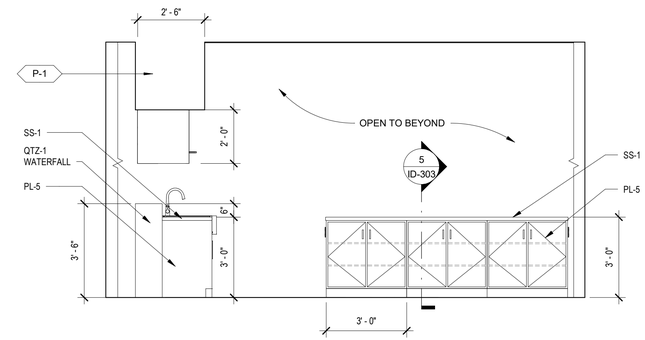

6 119 KITCHEN ISLAND 2 - NORTH
3/8" = 1'-0"

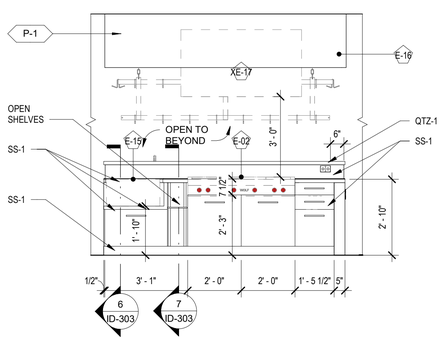

7 119 ISLAND 1 - NORTH
3/8" = 1'-0"

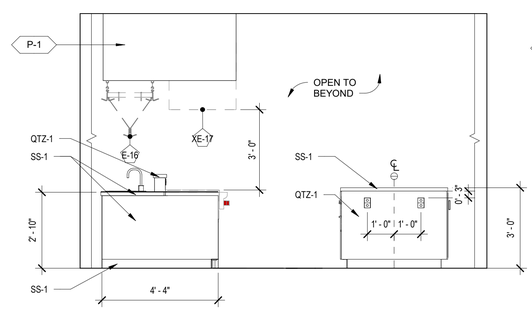

8 119 ISLANDS 1 & 2 - EAST
3/8" = 1'-0"

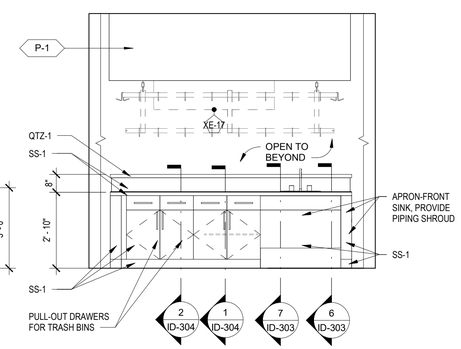

9 119 ISLAND 1 - SOUTH
3/8" = 1'-0"

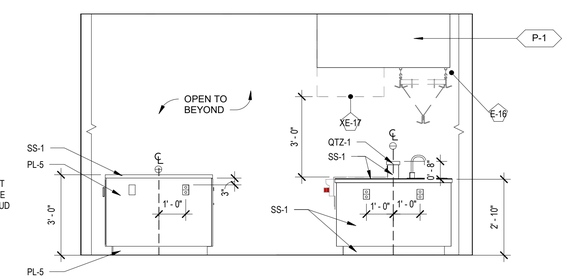

10 119 ISLANDS 1 & 2 - WEST
3/8" = 1'-0"

Architects Design Group

Architects and Planners
I.S.K. Reeves V, F.A.I.A.
Ian A. Reeves, A.I.A.
Susan Gantt A.I.A., LEED-AP

333 N. Knowles Ave.
Winter Park, Florida 32789
(407) 647-1706

Corporate Registration
Number: BR1177

REGISTERED ARCHITECT
IAN A. REEVES
22797
STATE OF TEXAS
06.05.2020

FIRE STATION NO.5

CITY OF LONGVIEW

100% BID SET

The architect hereby expressly reserves his common law copyright and other property rights in these drawings. These drawings shall not be reproduced without written permission and consent of the architect, nor are they to be assigned to any party without first obtaining written permission and consent.

REVISIONS/ADDENDA

Number	Description	Date Issued

SHEET TITLE:

INTERIOR ELEVATIONS

scale: 3/8" = 1'-0"
drawn: NG
checked: GG
approved: MBV
date: June 5, 2020

PROJECT NUMBER:

1006

SHEET NUMBER:

ID-204

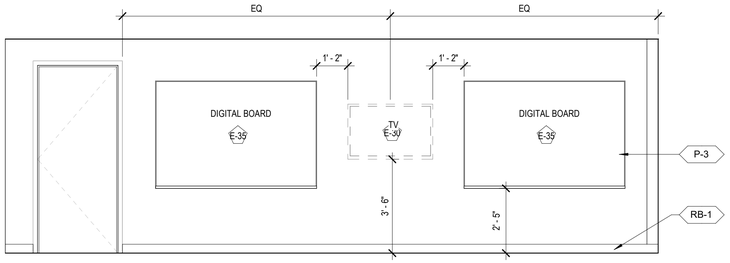

1 103 STUDY/WORK ROOM/OVERFLOW SLEEPING - WEST
3/8" = 1'-0"

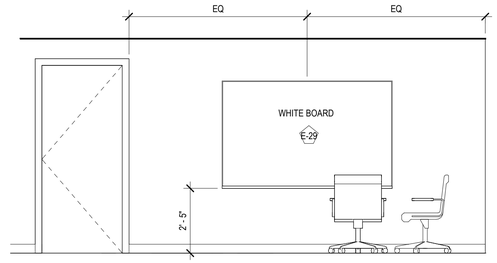

2 103 STUDY/WORK ROOM/OVERFLOW SLEEPING - EAST
3/8" = 1'-0"

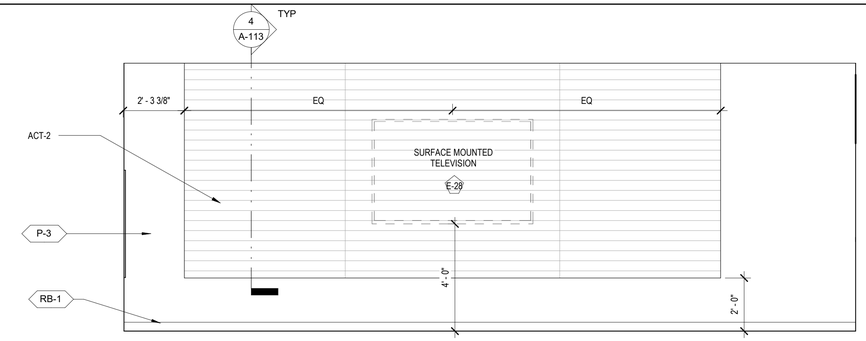

3 121 DAYROOM - NORTH
3/8" = 1'-0"

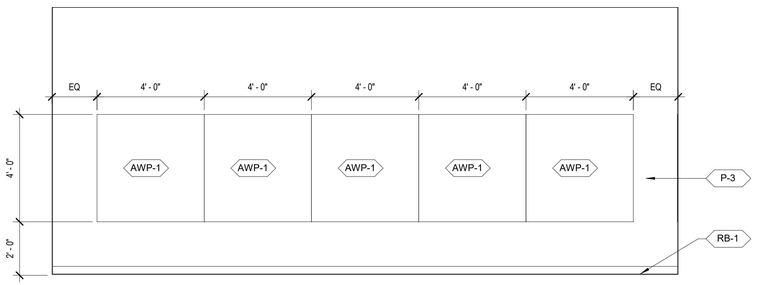

4 121 DAYROOM - SOUTH
3/8" = 1'-0"

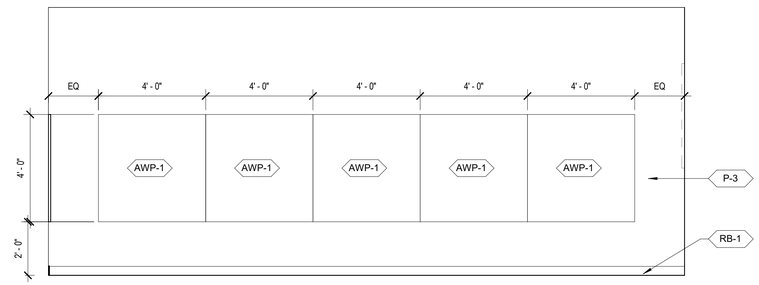

5 121 DAYROOM - WEST
3/8" = 1'-0"

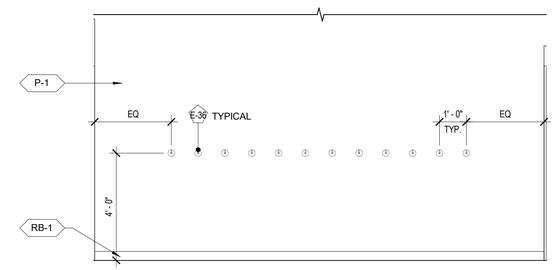

6 123 CORRIDOR - SOUTH
3/8" = 1'-0"

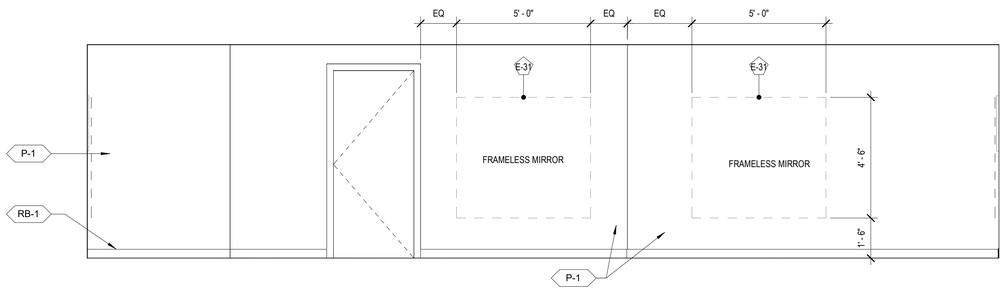

7 107 PHYSICAL AGILITY - NORTH
3/8" = 1'-0"

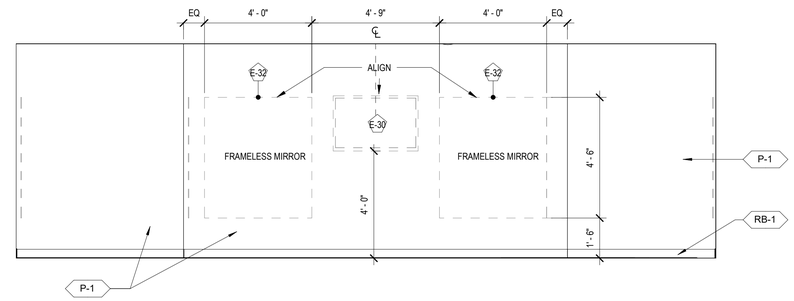

8 107 PHYSICAL AGILITY - EAST
3/8" = 1'-0"

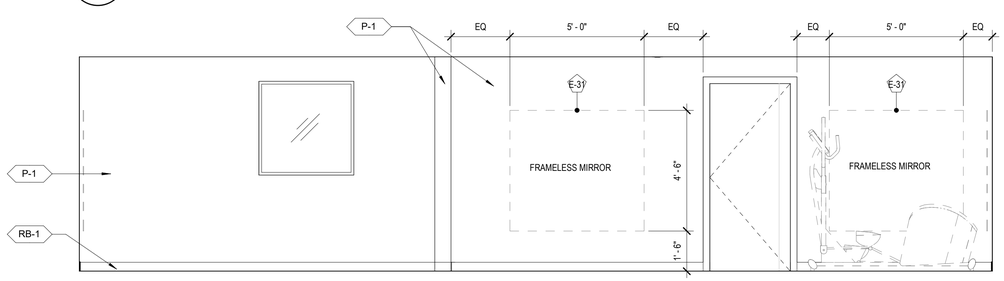

9 107 PHYSICAL AGILITY - SOUTH
3/8" = 1'-0"

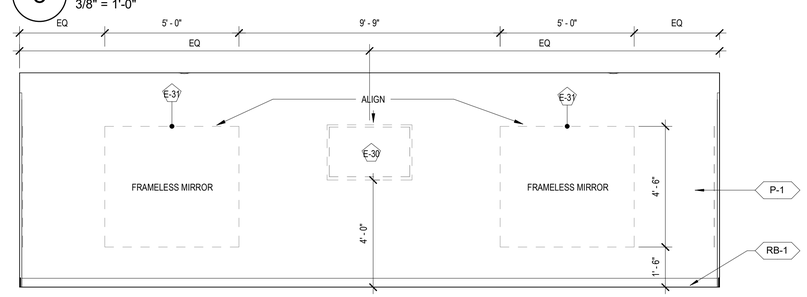

10 107 PHYSICAL AGILITY - WEST
3/8" = 1'-0"

Architects Design Group

Architects and Planners

I.S.K. Reeves V, F.A.I.A.
Ian A. Reeves, A.I.A.
Susan Gantt A.I.A., LEED-AP

333 N. Knowles Ave.
Winter Park, Florida 32789
(407) 647-1706

Corporate Registration
Number: BR1177

REGISTERED ARCHITECT
IAN A. REEVES
22797
STATE OF TEXAS
06.05.2020

FIRE STATION NO.5

CITY OF LONGVIEW

100% BID SET

The architect hereby expressly reserves his common law copyright and other property rights in these drawings. These drawings shall not be reproduced without written permission and consent of the architect, nor are they to be assigned to any party without first obtaining written permission and consent.

REVISIONS/ADDENDA

Number	Description	Date Issued

SHEET TITLE:

INTERIOR ELEVATIONS

scale: 3/8" = 1'-0"
drawn: NG
checked: GG
approved: MBV
date: June 5, 2020

PROJECT NUMBER:

1006

SHEET NUMBER:

ID-205

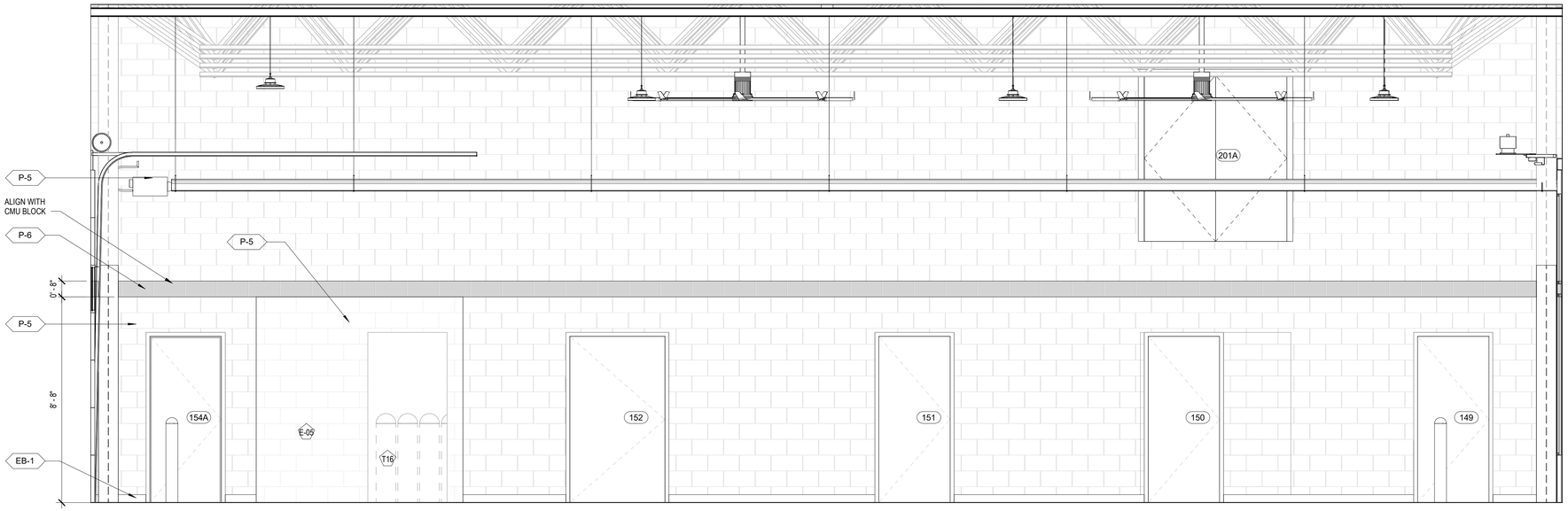

1 150 NEW APPARATUS BAYS - WEST
3/8" = 1'-0"

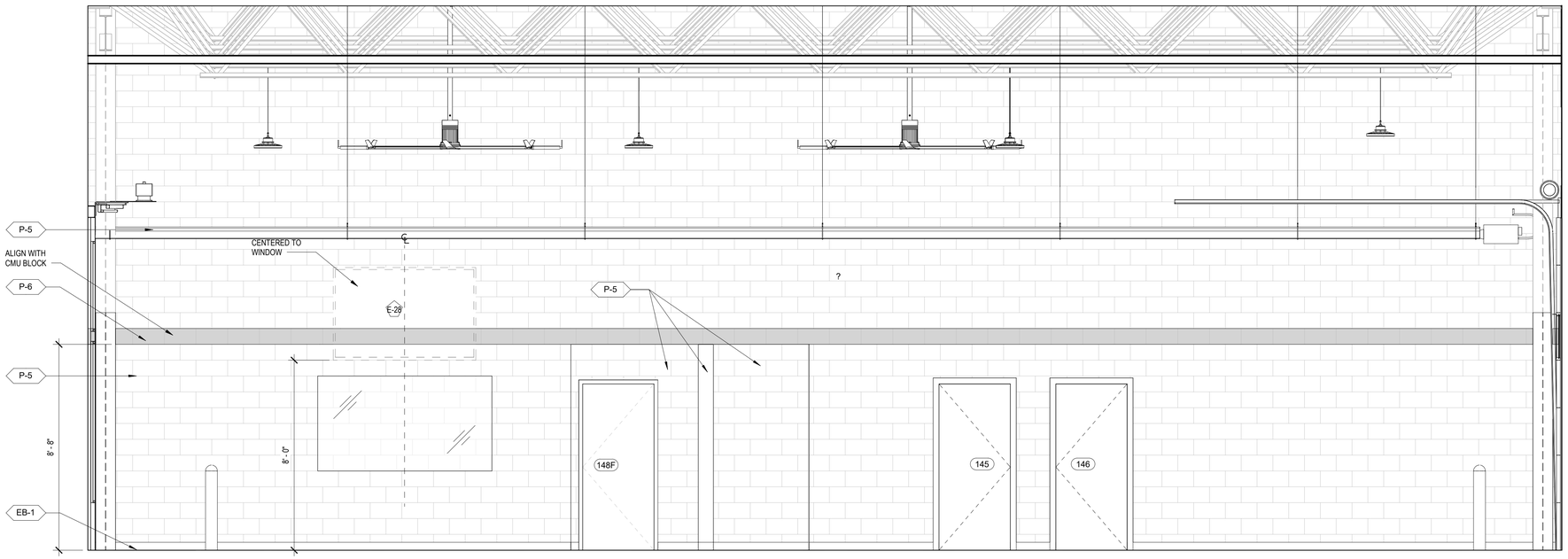

2 150 NEW APPARATUS BAYS - EAST
3/8" = 1'-0"

Architects Design Group

Architects and Planners

I.S.K. Reeves V, F.A.I.A.
Ian A. Reeves, A.I.A.
Susan Gantt A.I.A., LEED-AP

333 N. Knowles Ave.
Winter Park, Florida 32789
(407) 647-1706

Corporate Registration
Number: BR1177

REGISTERED ARCHITECT
IAN A. REEVES
22797
STATE OF TEXAS
06.05.2020

FIRE STATION NO.5

CITY OF LONGVIEW

100% BID SET

The architect hereby expressly reserves his common law copyright and other property rights in these drawings. These drawings shall not be reproduced without written permission and consent of the architect, nor are they to be assigned to any party without first obtaining written permission and consent.

REVISIONS/ADDENDA

Number	Description	Date Issued

SHEET TITLE:

INTERIOR ELEVATIONS

scale: 3/8" = 1'-0"
drawn: NG
checked: GG
approved: MVB
date: June 5, 2020

PROJECT NUMBER:

1006

SHEET NUMBER:

ID-206

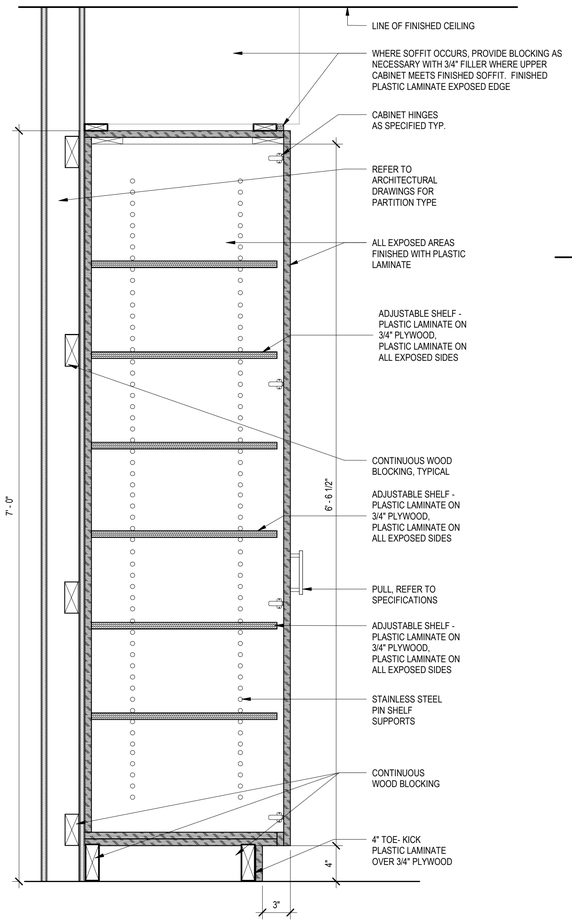

1 FULL HEIGHT CABINET
1 1/2" = 1'-0"

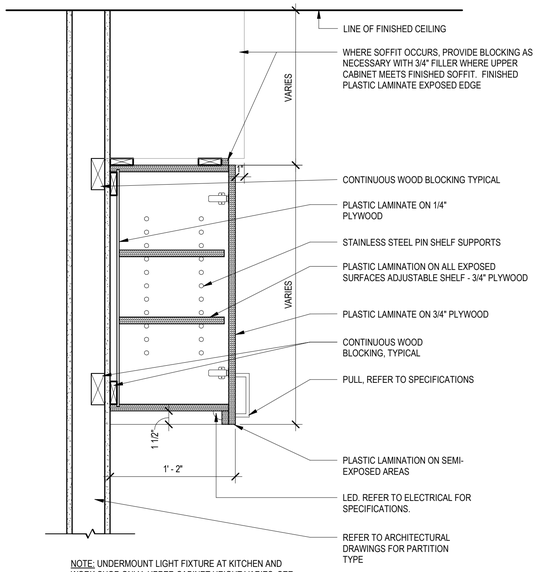

NOTE: UNDERMOUNT LIGHT FIXTURE AT KITCHEN AND WORK SHOP ONLY. UPPER CABINET HEIGHT VARIES. SEE INTERIOR ELEVATIONS FOR SCHEDULED HEIGHT. AT UPPER CABINETS THAT ARE LESS THAN 30" HIGH, ONLY 1 ADJUSTABLE SHELF IS REQUIRED.

2 UPPER CABINET
1 1/2" = 1'-0"

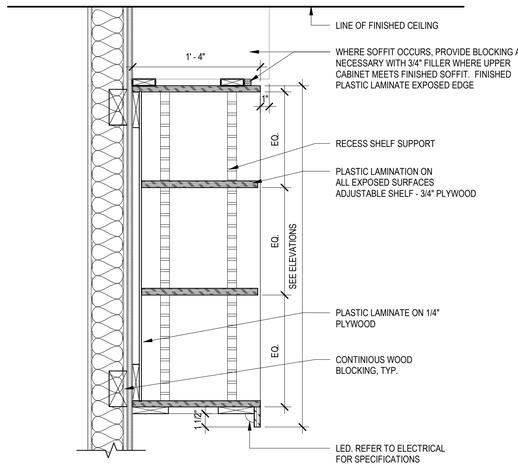

NOTE: UNDERMOUNT LIGHT FIXTURE AT KITCHEN AND WORK SHOP ONLY.

4 UPPER CABINET, SHELVES
1 1/2" = 1'-0"

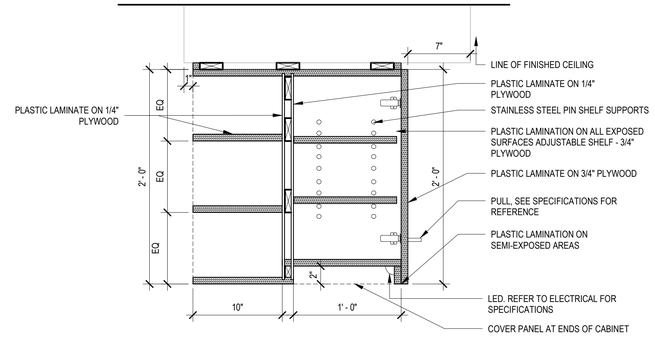

NOTE: UNDERMOUNT LIGHT FIXTURE AT KITCHEN AND WORK SHOP ONLY.

3 UPPER DOUBLE SIDED CABINET AND SHELVES
1 1/2" = 1'-0"

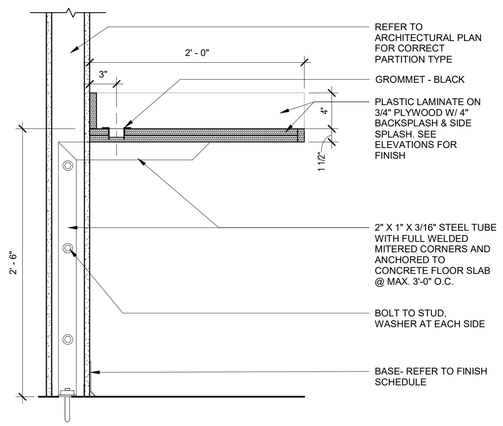

5 COUNTERTOP, PL
1 1/2" = 1'-0"

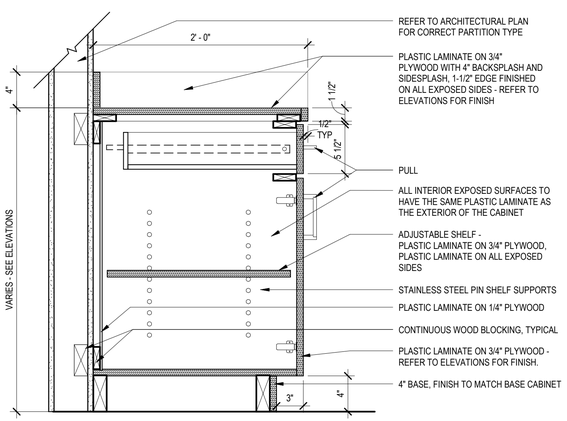

6 BASE CABINET, DRAWER AND DOOR, PL
1 1/2" = 1'-0"

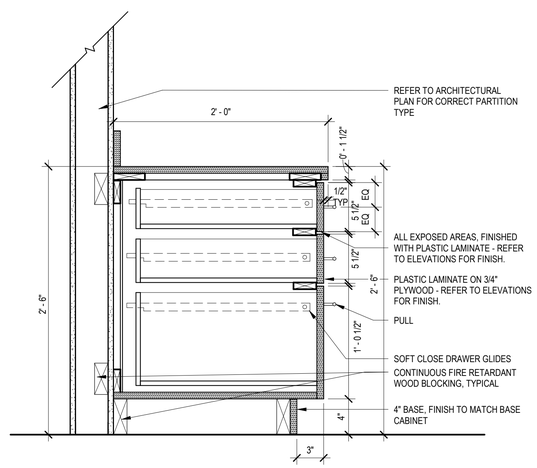

7 BASE CABINET, 3 DRAWER, PL
1 1/2" = 1'-0"

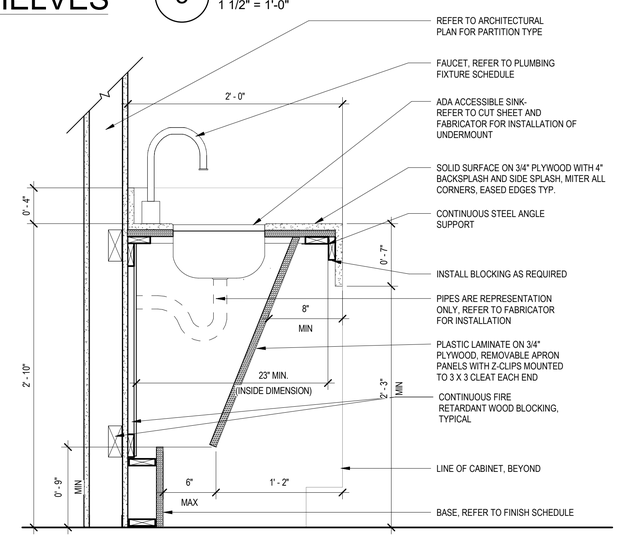

8 ADA, LAVATORY
1 1/2" = 1'-0"

Architects Design Group

Architects and Planners

I.S.K. Reeves V, F.A.I.A.
Ian A. Reeves, A.I.A.
Susan Gantt A.I.A., LEED-AP

333 N. Knowles Ave.
Winter Park, Florida 32789
(407) 647-1706

Corporate Registration Number: BR1177

REGISTERED ARCHITECT IAN A. REEVES 22797 STATE OF TEXAS
06.05.2020

FIRE STATION NO.5

CITY OF LONGVIEW

100% BID SET

The architect hereby expressly reserves his common law copyright and other property rights in these drawings. These drawings shall not be reproduced without written permission and consent of the architect, nor are they to be assigned to any party without first obtaining written permission and consent.

REVISIONS/ADDENDA

Number	Description	Date Issued

SHEET TITLE:

MILLWORK DETAILS

scale: 1 1/2" = 1'-0"
drawn: ADG WP
checked: GG
approved: MBV
date: June 5, 2020

PROJECT NUMBER:

1006

SHEET NUMBER:

ID-301

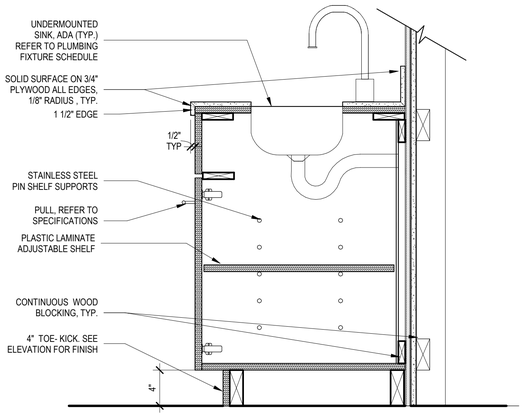

VANITY CABINET WITH SINK, SOLID SURFACE

1 1/2" = 1'-0"

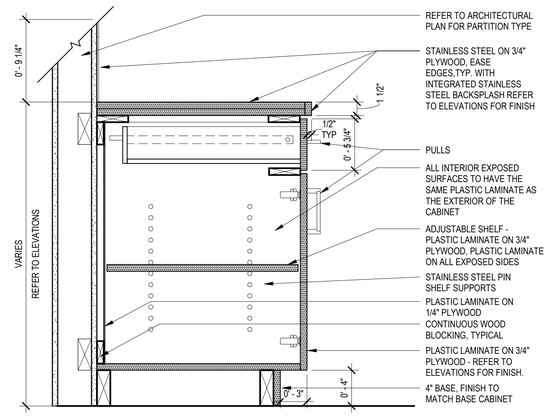

BASE CABINET, 1 DRAWER, STAINLESS STEEL

1 1/2" = 1'-0"

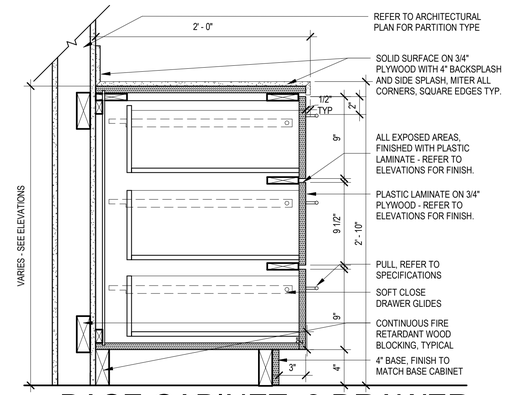

BASE CABINET, 3 DRAWER, SOLID SURFACE

1 1/2" = 1'-0"

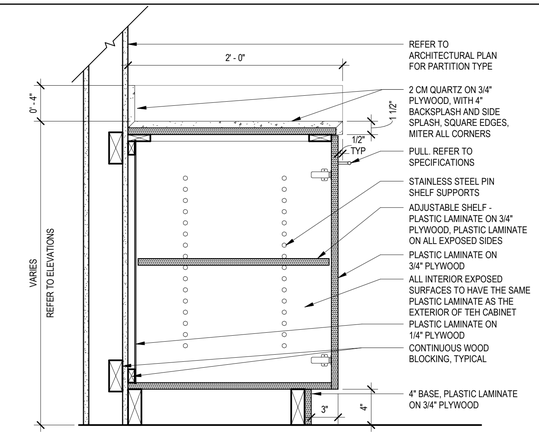

BASE CABINET, QUARTZ

1 1/2" = 1'-0"

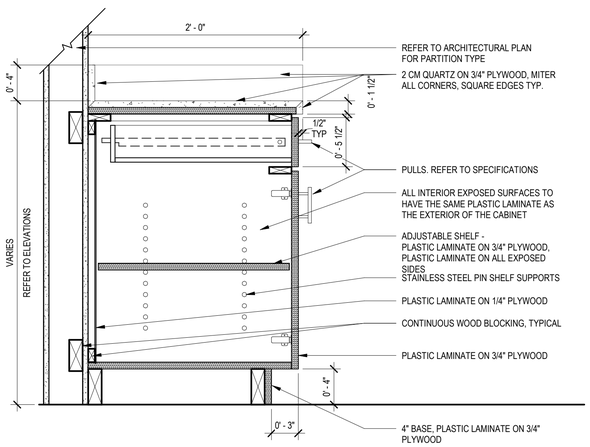

BASE CABINET, 1 DRAWER, QUARTZ

1 1/2" = 1'-0"

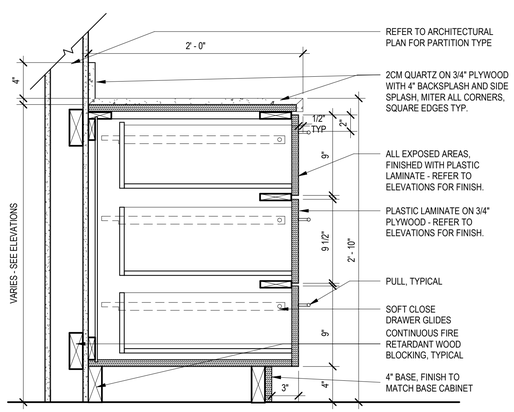

BASE CABINET, 3 DRAWER, QUARTZ

1 1/2" = 1'-0"

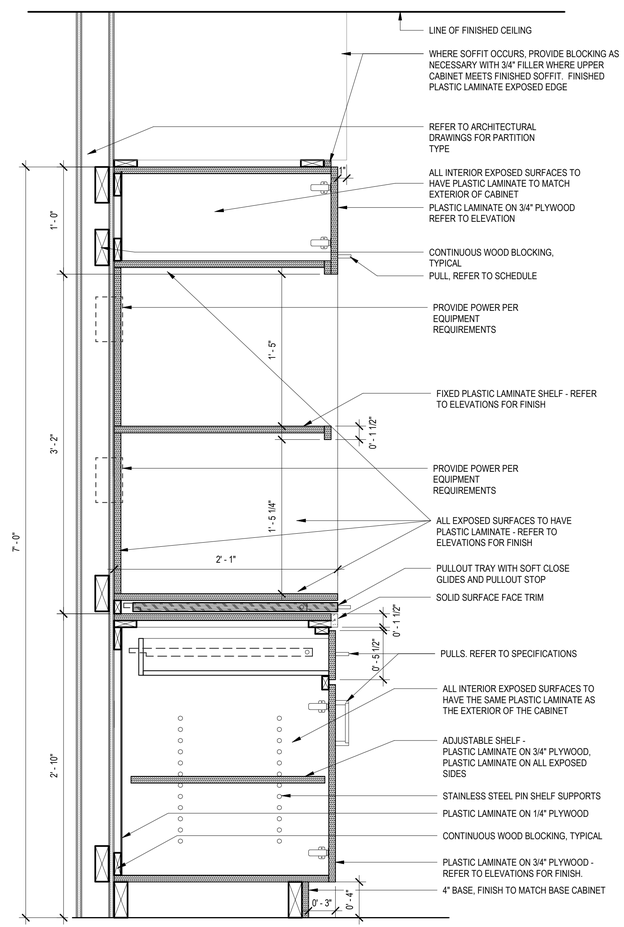

BASE, DBL MICROWAVE SHELF

1 1/2" = 1'-0"

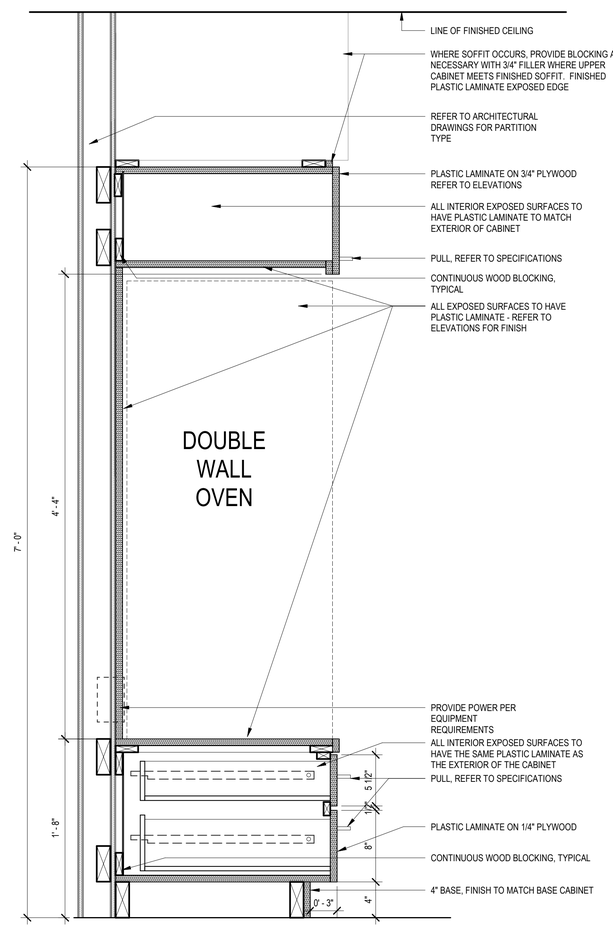

BASE, DOUBLE WALL OVEN

1 1/2" = 1'-0"

Architects Design Group

Architects and Planners

I.S.K. Reeves V, F.A.I.A.
Ian A. Reeves, A.I.A.
Susan Gantt A.I.A., LEED-AP

333 N. Knowles Ave.
Winter Park, Florida 32789
(407) 647-1706

Corporate Registration Number: BR1177

06.05.2020

FIRE STATION NO.5

CITY OF LONGVIEW

100% BID SET

The architect hereby expressly reserves his common law copyright and other property rights in these drawings. These drawings shall not be reproduced without written permission and consent of the architect, nor are they to be assigned to any party without first obtaining written permission and consent.

REVISIONS/ADDENDA

Number	Description	Date Issued

SHEET TITLE:

MILLWORK DETAILS

scale: 1 1/2" = 1'-0"
drawn: ADG WP
checked: GG
approved: MBV
date: June 5, 2020

PROJECT NUMBER:

1006

SHEET NUMBER:

ID-302

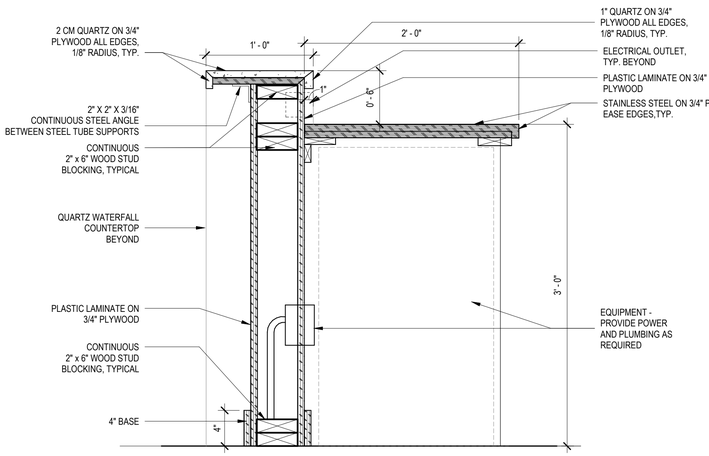

1 ISLAND APPLIANCE

1 1/2" = 1'-0"

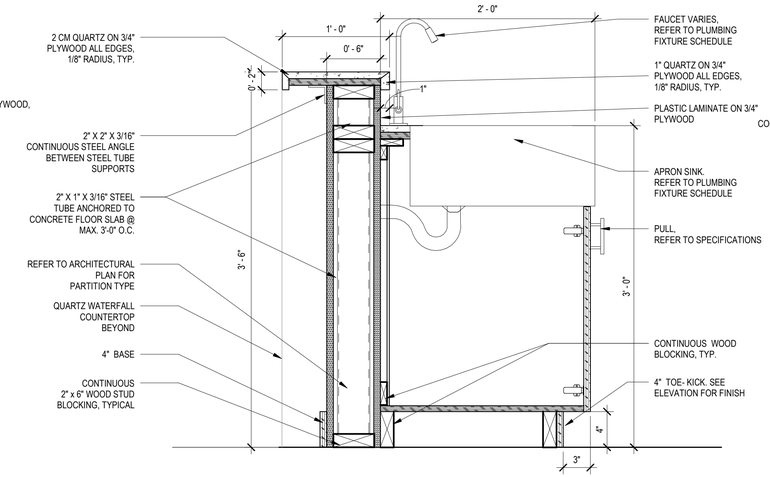

2 ISLAND BAR SINK

1 1/2" = 1'-0"

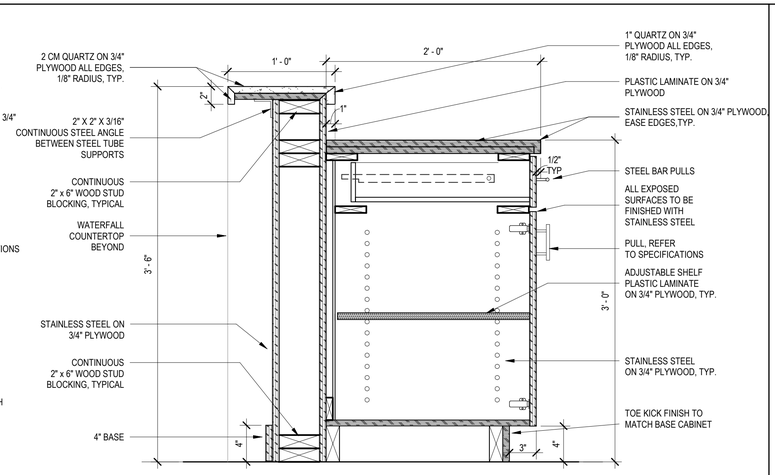

3 ISLAND BASE CABINET, 1 DRAWER

1 1/2" = 1'-0"

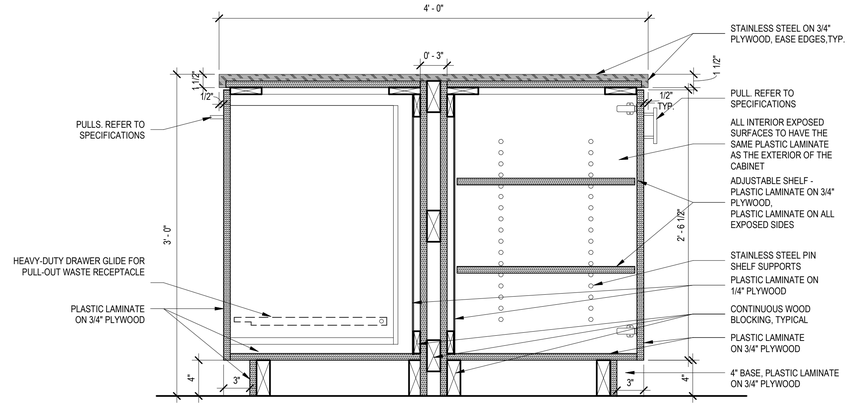

4 DOUBLE-SIDED ISLAND 1 DRAWER QTZ

1 1/2" = 1'-0"

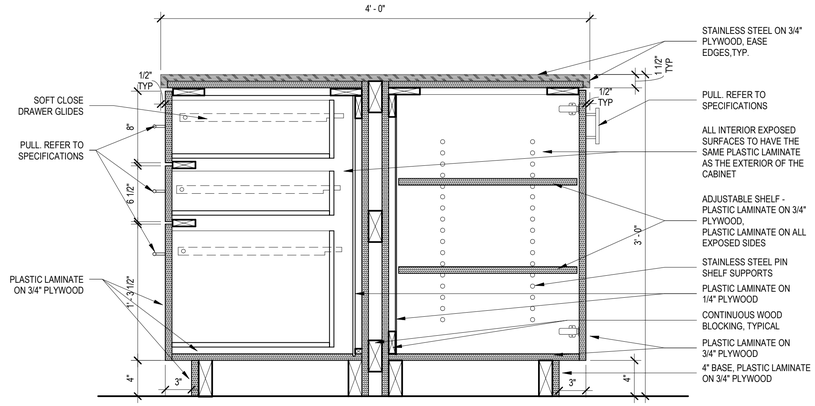

5 DOUBLE-SIDED ISLAND 3 DRAWER QTZ

1 1/2" = 1'-0"

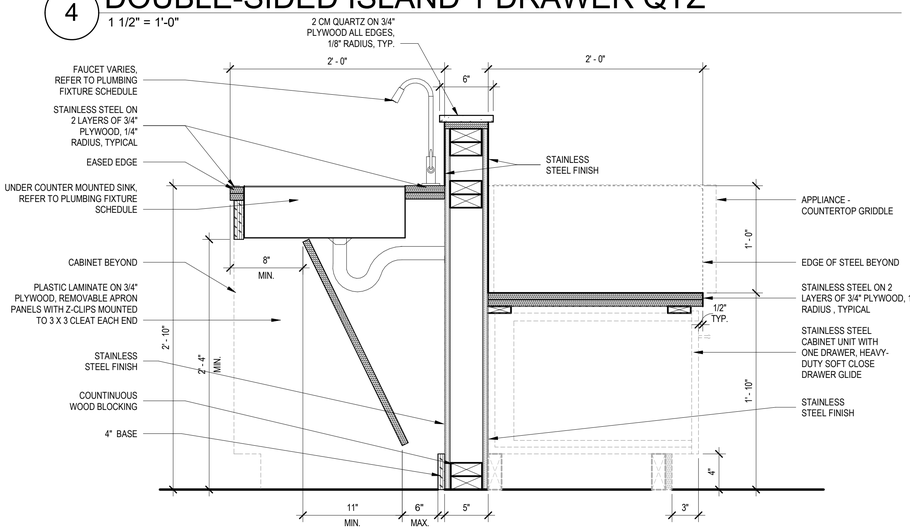

6 ISLAND AT SINK, STAINLESS STEEL

1 1/2" = 1'-0"

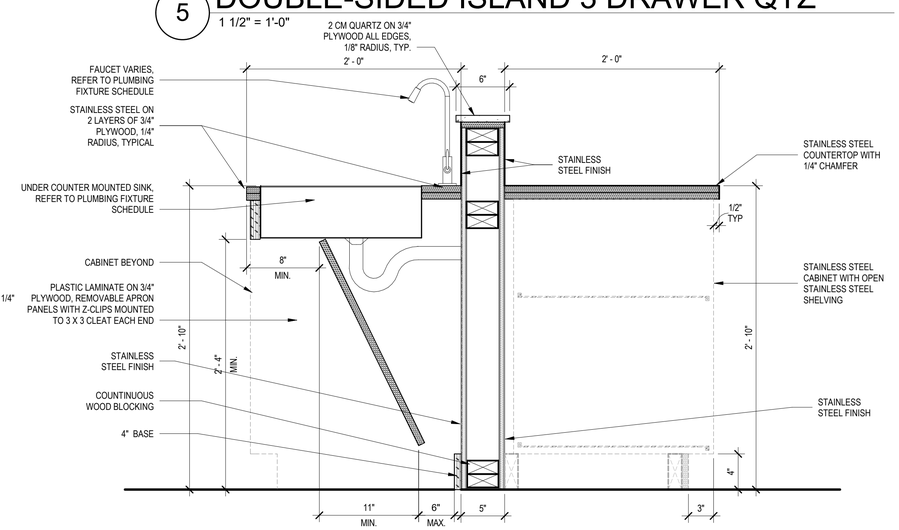

7 ISLAND AT OPEN SHELVES, STAINLESS STEEL

1 1/2" = 1'-0"

Architects Design Group

Architects and Planners

I.S.K. Reeves V, F.A.I.A.
Ian A. Reeves, A.I.A.
Susan Gantt A.I.A., LEED-AP

333 N. Knowles Ave.
Winter Park, Florida 32789
(407) 647-1706

Corporate Registration Number: BR1177

REGISTERED ARCHITECT IAN A. REEVES 22797 STATE OF TEXAS

06.05.2020

FIRE STATION NO.5

CITY OF LONGVIEW

100% BID SET

The architect hereby expressly reserves his common law copyright and other property rights in these drawings. These drawings shall not be reproduced without written permission and consent of the architect, nor are they to be assigned to any party without first obtaining written permission and consent.

REVISIONS/ADDENDA

Number	Description	Date Issued

SHEET TITLE:

MILLWORK DETAILS

scale: 1 1/2" = 1'-0"
drawn: ADG WP
checked: GG
approved: MBV
date: June 5, 2020

PROJECT NUMBER:

1006

SHEET NUMBER:

ID-303

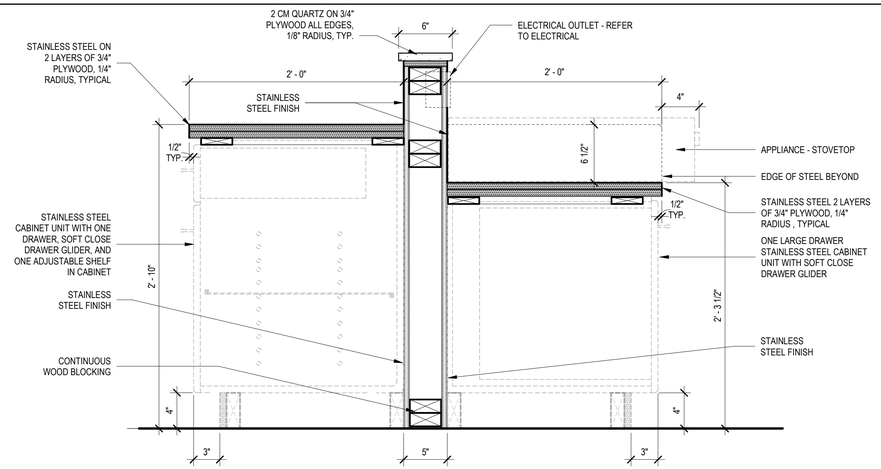

1 ISLAND AT STOVE TOP, STAINLESS STEEL
1 1/2" = 1'-0"

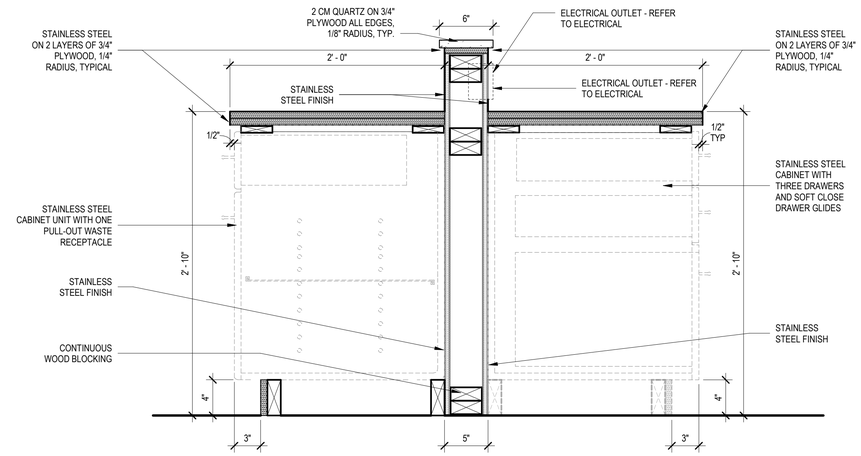

2 ISLAND AT TRIPLE DRAWERS, STAINLESS STEEL
1 1/2" = 1'-0"

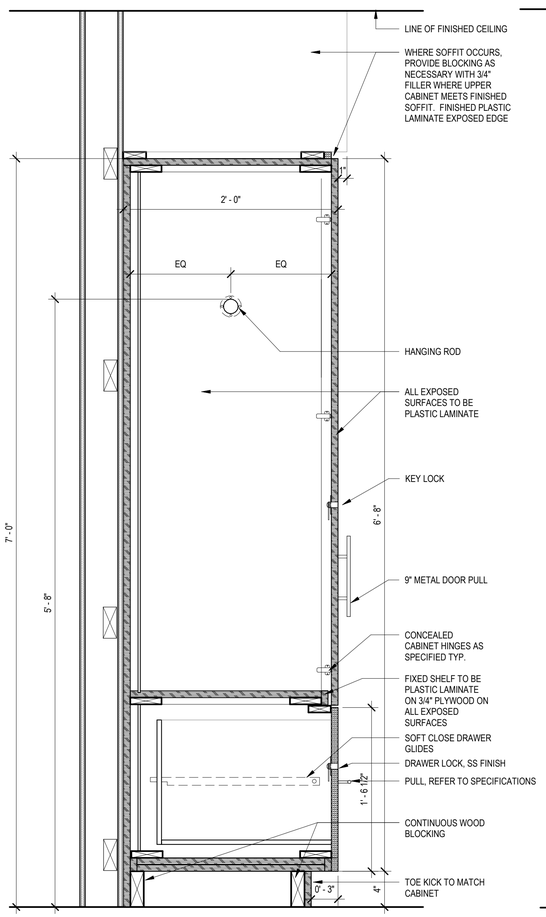

3 WARDROBE WITH ROD
1 1/2" = 1'-0"

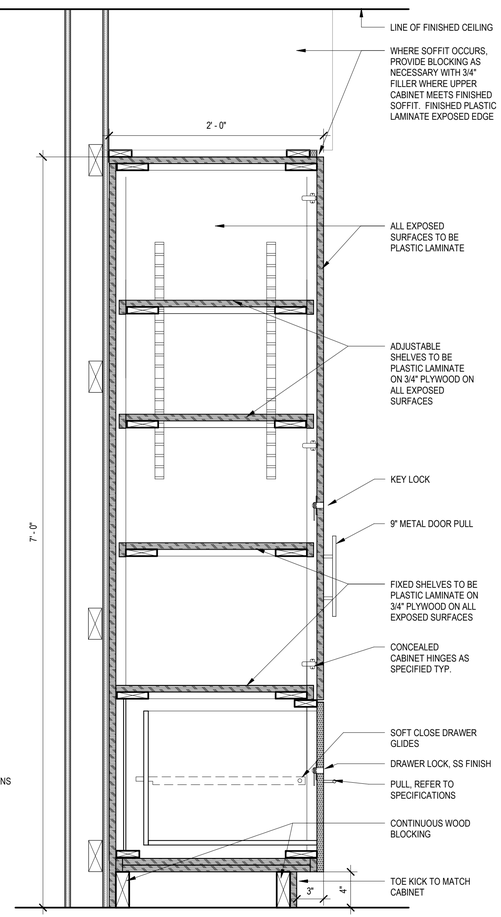

4 WARDROBE WITH SHELVES
1 1/2" = 1'-0"

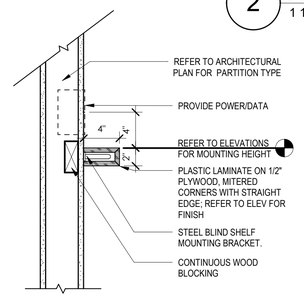

5 BUNK - SHELF
1 1/2" = 1'-0"

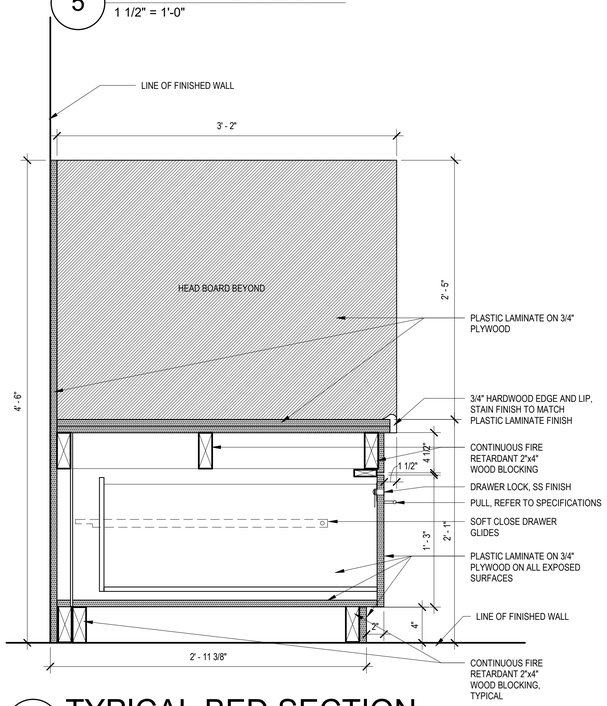

6 TYPICAL BED SECTION
1 1/2" = 1'-0"

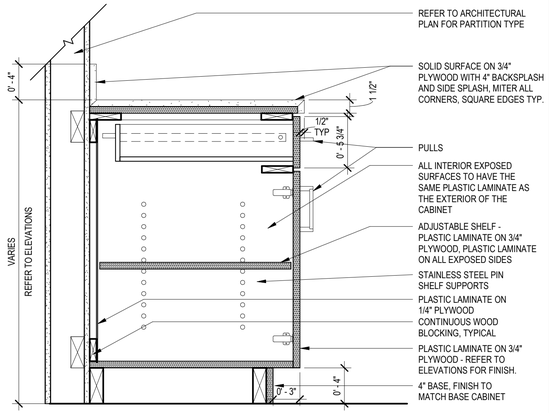

7 BASE CAB. - SOLID SURFACE
1 1/2" = 1'-0"

Architects Design Group

Architects and Planners

I.S.K. Reeves V, F.A.I.A.
Ian A. Reeves, A.I.A.
Susan Gantt A.I.A., LEED-AP

333 N. Knowles Ave.
Winter Park, Florida 32789
(407) 647-1706

Corporate Registration Number: BR1177

06.05.2020

FIRE STATION NO.5

CITY OF LONGVIEW

100% BID SET

The architect hereby expressly reserves his common law copyright and other property rights in these drawings. These drawings shall not be reproduced without written permission and consent of the architect, nor are they to be assigned to any party without first obtaining written permission and consent.

REVISIONS/ADDENDA

Number	Description	Date Issued

SHEET TITLE:

MILLWORK DETAILS

scale: 1 1/2" = 1'-0"
drawn: ADG WP
checked: GG
approved: Approver
date: June 5, 2020

PROJECT NUMBER:

1006

SHEET NUMBER:

ID-304

FINISH SCHEDULE

ROOM #	ROOM NAME	FLOORING	BASE	WALLS NORTH	WALLS SOUTH	WALLS EAST	WALLS WEST	CEILING / FINISH	COMMENTS
101	ENTRY	LVT	RB-1	P-1	P-1	P-1, PTW-4	P-1, PTW-4	P-4 / GWB-1	
103	CORRIDOR	LVT	RB-1	P-1	P-1	P-1	P-1	ACT-1	
104	BATT. CHIEF OFFICE	LVT	PTB-1	P-1, PTW-1	P-1, PTW-1	P-1, PTW-1	P-1, PTW-1	ACT-1	
104A	BATT. CHIEF BUNK	LVT	RB-1	P-3	P-3	P-3	P-3	ACT-1	
104B	BATT. CHIEF RR	PTF-1	RB-1	P-1, PTW-1	P-1, PTW-1	P-1, PTW-1	P-1, PTW-1	P-4 / GWB-1	P-8 @ SHOWER CEILING, PTF-2 @ SHOWER
105	AIR LOCK	CPT-1	RB-1	P-1	P-1	P-1	P-1	ACT-1	
106	BATT. CHIEF BUNKER GEAR	SC-1	RB-1	P-1	P-1	P-1	P-1	ACT-1	
107	EXISTING APPARATUS BAY	EXISTG	EXISTING	EXISTING	EXISTING	EXISTING	EXISTING	EXP / PM-3	
108	STORAGE	EXISTG	EXISTING	EXISTING	EXISTING	EXISTING	EXISTING	EXP / PM-3	
108	CORRIDOR	LVT	RB-1	P-1	P-1	P-1	P-1	EXP / PM-1	
109	SWIFT WATER STORAGE	EXISTG	EXISTING	EXISTING	EXISTING	EXISTING	EXISTING	EXP / PM-3	
110	LAWN STORAGE	EXISTG	EXISTING	EXISTING	EXISTING	EXISTING	EXISTING	EXP / PM-1	
111	AIR LOCK	CPT-1	RB-1	P-1	P-1	P-1	P-1	ACT-1	
112	EXISTING MECHANICAL	SC-1	RB-1	P-1	P-1	P-1	P-1	EXP / PM-1	
113	BED STORAGE	LVT	RB-1	P-1	P-1	P-1	P-1	ACT-1	
114	PHYSICAL AGILITY	RAF-1	RB-1	P-1	P-1	P-1	P-1	EXP / PM-1	
115	CORRIDOR	LVT	RB-1	P-3	P-3	P-3	P-3	ACT-1	
116	STUDY / WORK ROOM / OVERFLOW SLEEPING	LVT	RB-1	P-3	P-3	P-3	P-3	ACT-1	
117	OFFICE	LVT	RB-1	P-1	P-1	P-1	P-1	ACT-1	
118	CONNECTOR	LVT	---	---	---	---	---	ACT-1	
119	KITCHEN	LVT	PTB-1	P-1	P-1	P-1, PTW-3	P-1	P-4 / GWB-1	
120A	PANTRY A	LVT	RB-1	P-1	P-1	P-1	P-1	P-4 / GWB-1	
120B	PANTRY B	LVT	RB-1	P-1	P-1	P-1	P-1	P-4 / GWB-1	
120C	PANTRY C	LVT	RB-1	P-1	P-1	P-1	P-1	P-4 / GWB-1	
121	DAYROOM	LVT	RB-1	P-3	P-3	P-3	P-3	ACT-2, EXP / PM-1	
122	DINING	LVT	RB-1	P-1	---	P-1	P-1	ACT-2, EXP / PM-1	
123	CORRIDOR	LVT	RB-1	P-1	P-1	P-1	P-1	EXP / PM-1	
124	RR	PTF-1	RB-1	P-1, PTW-1	P-1, PTW-1	P-1, PTW-1	P-1, PTW-1	P-4 / GWB-1	
125	BUNK	LVT	RB-1	P-3	P-3	P-3	P-3	ACT-1	
126	BUNK	LVT	RB-1	P-3	P-3	P-3	P-3	ACT-1	
127	BUNK	LVT	RB-1	P-3	P-3	P-3	P-3	ACT-1	
128	ELECTRICAL	SC-1	RB-1	P-1	P-1	P-1	P-1	EXP / PM-1	
129	ADA RR	PTF-1	PTB-1	P-1, PTW-1	P-1, PTW-1	P-1, PTW-1	P-1, PTW-1	P-4 / GWB-1	P-8 @ SHOWER CEILING, PTF-2 @ SHOWER
130	RR	PTF-1	RB-1	P-1, PTW-1	P-1, PTW-1	P-1, PTW-1	P-1, PTW-1	P-4 / GWB-1	P-8 @ SHOWER CEILING, PTF-2 @ SHOWER
131	BUNK	LVT	RB-1	P-3	P-3	P-3	P-3	ACT-1	
132	BUNK	LVT	RB-1	P-3	P-3	P-3	P-3	ACT-1	
133	ADA RR	PTF-1	PTB-1	P-1, PTW-1	P-1, PTW-1	P-1, PTW-1	P-1, PTW-1	P-4 / GWB-1	P-8 @ SHOWER CEILING, PTF-2 @ SHOWER
134	RR	PTF-1	RB-1	P-1, PTW-1	P-1, PTW-1	P-1, PTW-1	P-1, PTW-1	P-4 / GWB-1	P-8 @ SHOWER CEILING, PTF-2 @ SHOWER
135	BUNK	LVT	RB-1	P-3	P-3	P-3	P-3	ACT-1	
136	BUNK	LVT	RB-1	P-3	P-3	P-1	P-3	ACT-1	
137	ADA RR	PTF-1	RB-1	P-1, PTW-1	P-1, PTW-1	P-1, PTW-1	P-1, PTW-1	P-4 / GWB-1	P-8 @ SHOWER CEILING, PTF-2 @ SHOWER
138	BUNK	LVT	RB-1	P-3	P-3	P-3	P-3	ACT-1	
139	BUNK	LVT	RB-1	P-3	P-3	P-3	P-3	ACT-1	
140	BUNK	LVT	RB-1	P-3	P-3	P-3	P-3	ACT-1	
140	CORRIDOR	LVT	RB-1	P-1	P-1	P-1	P-1	ACT-1	
141	RISER	SC-1	RB-1	P-1	P-1	P-1	P-1	P-4 / GWB-1	
142	LAUNDRY	LVT	RB-1	P-5	P-5	P-5	P-5	ACT-1	
143	WATCH OFFICE	LVT	PTB-1	P-1, PTW-1	P-1, PTW-1	P-1, PTW-1	P-1, PTW-1	ACT-1	
144	AIR LOCK / ICE	CPT-1	RB-1	P-1	P-1	P-1	P-1	ACT-1	
145	ADA RR	EF-1	PTB-1	P-1, PTW-1	P-1, PTW-1	P-1, PTW-1	P-1, PTW-1	P-4 / GWB-1	P-8 @ SHOWER CEILING
146	EMS STORAGE	SC-1	---	P-1	P-1	P-1	P-1	ACT-1	
147	MECHANICAL	SC-1	---	P-1	P-1	P-1	P-1	EXP / PM-1	
148	NEW APPARATUS BAYS	EF-1	EB-1	P-5	P-5	P-5, P-6	P-5, P-6	EXP / PM-3	
149	BUNKER GEAR STORAGE PROTECTED-A	SC-1	---	P-1	P-1	P-1	P-1	EXP / PM-1	
150	BUNKER GEAR STORAGE-B	SC-1	---	P-1	P-1	P-1	P-1	EXP / PM-1	
151	BUNKER GEAR STORAGE-C	SC-1	---	P-1	P-1	P-1	P-1	EXP / PM-1	
152	DECON/ EXTRACTOR	SC-1	---	P-1	P-1	P-1	P-1	EXP / PM-1	
153	SCBA/COMPRESS	SC-1	---	P-1	P-1	P-1	P-1	EXP / PM-1	
153	CONNECTOR	LVT	---	---	---	---	---	ACT-1	
154	WORKSHOP	SC-1	RB-1	P-1	P-1	P-1	P-1	EXP / PM-1	
171	TRAINING TOWER	SC-1	---	P-1	P-1	P-1	P-1	EXP / PM-1	
200	TRAINING TOWER/MECH ACCESS	SC-1	---	P-1	P-1	P-1	P-1	EXP / PM-1	
X102	STORAGE	LVT	RB-1	P-1	P-1	P-1	P-1	P-4 / GWB-1	

Architects Design Group

Architects and Planners

I.S.K. Reeves V, F.A.I.A.
Ian A. Reeves, A.I.A.
Susan Gantt A.I.A., LEED-AP

333 N. Knowles Ave.
Winter Park, Florida 32789
(407) 647-1706

Corporate Registration
Number: BR1177

REGISTERED ARCHITECT
IAN A. REEVES
22797
STATE OF TEXAS
06.05.2020

FIRE STATION NO.5

CITY OF LONGVIEW

100% BID SET

The architect hereby expressly reserves his common law copyright and other property rights in these drawings. These drawings shall not be reproduced without written permission and consent of the architect, nor are they to be assigned to any party without first obtaining written permission and consent.

REVISIONS/ADDENDA

Number	Description	Date Issued

SHEET TITLE:

INTERIOR FINISH SCHEDULE

scale:
drawn: NG
checked: GG
approved: MBV
date: June 5, 2020

PROJECT NUMBER:

1006

SHEET NUMBER:

ID-401

INTERIOR FINISH LEGEND1

FINISH TAG	MATERIAL	MANUFACTURER	STYLE	COLOR	SIZE	Comments
033543	**Sealed Concrete**					
SC-1	Sealed Stained Concrete	L.M. Scofield Co.	Formula One Liquid Dye	Clear	-	
064116	**High Pressure Plastic Laminate**					
PL-1	Plastic Laminate	Wilsonart	Traceless Finish	Charcoal Velvet 15504-31	-	Upper and base cabinets, where indicated on elevations
PL-2	Plastic Laminate	Wilsonart	Traceless Finish	Pewter Velvet 1508-31	-	"Dry" countertops and RR sink bases/aprons; see elevations for exact locations
PL-3	Plastic Laminate	Wilsonart	Matte Finish, Compact Type	Regimental Red D12-60	-	Inside of Kitchen upper cabinets, vertical panel only.
PL-4	Plastic Laminate	Wilsonart	Fine Velvet Finish	Organic Cotton	-	Worksufaces.
PL-5	Plastic Laminate	Wilsonart	Aligned Texture Finish	Mercer Oak 17012K-57	-	Kitchen Lower Cabinets.
PL-6	Plastic Laminate	Wilsonart	Traceless Finish	Silver Velvet 15503-31	-	Kitchen Upper Cabinets.
PL-7	Plastic Laminate	Wilsonart	Decorative Metals	Brite Brushed Natural Aluminum	-	Single Panel Under Kitchen Serving Counter.
064020	**Stainless Steel**					
SS-1	Stainless Steel	Refer to specs	Type 316	-	-	Countertop - See elevations for exact locations.
066651	**Solid Polymer Fabrication**					
SOS-1	Solid Polymer Fabrication	Livingstone	-	L713 Shoreline	-	Restroom Counters
SOS-2	Solid Polymer Fabrication	Livingstone	-	L212 Monsoon	-	Laundry Room Counter
081416	**Flush Wood Doors**					
LD-1	Laminated Doors	VT Industries	The Heritage Collection / Laminart, Fine Grain Finish	3062-E Classic Maple		All Interior Wood Doors UNO
093013	**Porcelain Tile**					
PTF-1	Porcelain Tile - Floor	Trinity Tile	Excellar	Road, Matte Finish	12" x 24"	Restoom Floors. Installed Horizontal Stacked. Installed with Schluter®-DILEX-AHK for wall to floor transition, install out corners and in corner caps where required. 1/8 Sanded Grout Joint; Grout: Laticrete, #78 Sterling Silver.
PTF-2	Porcelain Tile - Floor	Daltile	Fabric Art, Modern Kaleidoscope	White Ash Prism MK71	12" x 24"	Shower Floors. Installed Horizontal Stacked. Installed with Schluter®-DILEX-AHK for wall to floor transition, install out corners and in corner caps where required. 1/8 Grout Sanded Joint; Grout: Laticrete, #78 Sterling Silver.
PTW-1	Porcelain Tile - Wall	Trinity Tile	Excellar	Clay, Matte Finish	12" x 24"	Restoom Walls. Installed Horizontal Stacked. Installed with Schluter®-Jolly A100ACGB, Anodized Aluminum at top edges. Installed with Schluter®-DILEX-AHK for wall to floor transition, install out corners and in corner caps where required. 1/8 Unsanded Grout Joint; Grout: Laticrete, #45 Raven.
PTW-2	Porcelain TIle - Wall	Daltile	Fabric Art, Modern Textile	Medium Gray MT53	12" x 24"	Shower Walls. Installed Vertical Stacked. Installed with Schluter®-DILEX-AHK for wall to floor transition, install out corners and in corner caps where required. 1/8 Unsanded Grout Joint; Grout: Laticrete, #78 Sterling Silver.
PTW-3	Porcelain Tile - Wall	Trinity Tile	Palais	Sombre, Polished Finish	12" x 24"	Kitchen Backsplash. Installed Horizontal Stacked.1/8 Unsanded Grout Joint; Grout: Laticrete, #45 Raven.
PTW-4	Porcelain TIle - Wall Accent	Daltile	Uniform Mosaics, Asher Mosaic	Volcanic Blend UM22	12 15/16" x 12 15/16"	Lobby Accent Band. Installed Horizontal Stacked, Pointing towards Plan South. Installed with Schluter®-Jolly A100ACGB, Anodized Aluminum at top and bottom.1/8 Unsanded Grout Joint; Grout: Laticrete, #78 Sterling Silver.
PTW-5	Porcelain TIle - Wall	Trinity Tile	Excellar	Salt, Matte Finish	12" x 24"	Installed Horizontal Stacked. Installed with Schluter®-DILEX-AHK for wall to floor transition, install out corners and in corner caps where required. 1/8 Unsanded Grout Joint; Grout: Laticrete, #45 Raven.
095123	**Acoustical Panel Ceilings**					
ACT-1	Acoustical Ceiling Tile	Rockfon	Alaska, Square Tegular Narrow, Fine Texture; SLN 10200, 24" x 24" x 3/4"; 0.90 NRC, 0.86 LR, 9/16" Suspension Grid	White	24" x 24" x 3/4"	Typical Ceiling UNO
ACT-2	Wood Panel Ceilings, Fire-retardant Particle Board	Armstrong Ceilings	Line Name: WOODWORKS Linear Veneered Planks Item: 6440W1, 5370 Suspension system, 4" Woodworks Trim 4" x 96" x 3/4" with Maple finish Item: 5415W1, Fiberglass Infill Panel Item: 8200T10	Natural Variations Maple	4 1/2" Wide Planks, 3 3/4" x 96" x 3/4" Reveal	Straight Ceiling-to-Walll Transition at Dayroom.
09651	**Vinyl Composite Tile**					
LVT-1	Luxury Vinyl Tile	Armstrong Flooring	Natural Creations with Diamond 10 Technology: Mystix Mixer	NA615 On The Rocks	18" x 18"	
096513	**Resilient Wall Base**					
RB-1	Resilient Rubber Base 4"	Johnsonite	Rubber Base	82 Black Pearl 'B'	4"	4" straight base at carpet and cove base at hard flooring
096500	**Resilient Athletic Flooring**					
RAF-1	Resilient Athletic Flooring Tile	Ecore Commercial	ECOfit	620 Red Hots	24" x 24" x 3/8"	Interlocking Tiles
096723	Resinous Flooring					
EF-1	Epoxy Quartz Flooring	Sherwin Williams	Ceramic Carpet #400, Fine Texture	Charcoal		
EB-1	Epoxy Quartz Integral Base	Sherwin Williams	Ceramic Carpet #400	Charcoal	4"	
096813	**Carpet Tile**					
CPT-1	Carpet Tile, Walk-Off	Construction Specialties	PediTred® G3, 1/2" deep, low-profile entrance grid system	Pewter	Verify in Field	Refer to finish plan for exact locations
098433	**Sound Absorbing Panels**					
AWP-1	Acoustical Sound-Absorbing Wall Panels	Koroseal	Performance 100 1" Fiberglass core with square edge detail, Wrapped with Guilford of Maine fabric Studio 54 2966	Celebrity 7045	See Elevations.	
099123	**Paints and Special Coatings**					
P-1	Interior Paint	Sherwin Williams	Satin UNO	Popular Gray SW 6071	-	Wall Paint
P-2	Interior Paint	Sherwin Williams	Satin UNO	Poinsettia SW 6594	-	Accent
P-3	Interior Paint	Sherwin Williams	Satin UNO	China Doll SW 7517	-	Bunk Rooms
P-4	Interior Paint	Sherwin Williams	Flat UNO	Ceiling Bright White SW 7007	-	Gypsum Board Ceilings
P-5	Interior Paint	Sherwin Williams	Semi-Gloss UNO	Versatile Gray SW 6072	-	Wall Paint at Apparatus Bay
P-6	Interior Paint	Sherwin Williams	Semi-Gloss UNO	Poinsettia SW 6594	-	Accent band at Apparatus Bay
P-7	Interior Paint	Sherwin Williams	Semi-Gloss UNO	Ceiling Bright White SW 7007	-	Gypsum Board Ceilings @ Showers
PM-1	Interior Paint	Sherwin Williams	Flat UNO	Acier SW 9170	-	Paint Exposed Structure (EXP)
PM-2	Interior Paint	Sherwin Williams	Semi-Gloss UNO	Versatile Gray SW 6072	-	Interior HM Door Frames
PM-3	Interior Paint	Sherwin Williams	Flat UNO	Bluebell SW 6793	-	Apparatus Bay Exposed Ceiling
PM-4	Interior Paint	Sherwin Williams	Semi-Gloss UNO	Poinsettia SW 6594	-	Pantry Rolling Doors Accent
102600	**Wall Protection**					
CG-1	Corner Guard	Nystrom	Stainless Steel 1" Wing, 7' A.F.F.	Satin #4		Refer to specifications
122413	**Roller Shades**					
RS-1	Solar Rollar Shades	Mecho Shade Systems	Mecho/5 Shade Manual: ThermoVeil Dense Basketweave, 1300 Series, 5% Open	1320 Shadow Grey	Varies - See Window Schedulde	All exterior windows to receive shades UNO. Field verify.
123661.19	**Quartz Surfacing**					
QTZ-1	Countertop	Caesarstone	-	2141 Blizzard	2 CM	

Architects Design Group

Architects and Planners

I.S.K. Reeves V, F.A.I.A.
Ian A. Reeves, A.I.A.
Susan Gantt A.I.A., LEED-AP

333 N. Knowles Ave.
Winter Park, Florida 32789
(407) 647-1706

Corporate Registration
Number: BR1177

REGISTERED ARCHITECT
IAN A. REEVES
22797
STATE OF TEXAS

06.05.2020

FIRE STATION NO.5

CITY OF LONGVIEW

100% BID SET

The architect hereby expressly reserves his common law copyright and other property rights in these drawings. These drawings shall not be reproduced without written permission and consent of the architect, nor are they to be assigned to any party without first obtaining written permission and consent.

REVISIONS/ADDENDA

Number	Description	Date Issued

SHEET TITLE:

INTERIOR FINISH LEGEND

scale:
drawn: NG
checked: GG
approved: MBV
date: June 5, 2020

PROJECT NUMBER:

1006

SHEET NUMBER:

ID-402

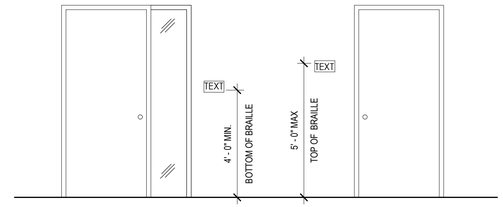

1 INTERIOR SIGNAGE PLACEMENT

3/8" = 1'-0"

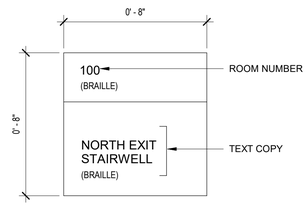

TYPE A.1

TYPE B.1

TYPE B.2

BASIS OF DESIGN: APCO (ELEVATE) FRAMELESS SYSTEM

ADA-COMPLIANT ACRYLIC WALL SIGNS, COPY IS RAISED 1/32". SIGNS ARE 1/8" THICK, TO BE INSTALLED USING D/S TAPE. (FINISH COLORS TO BE SELECTED BY OWNER)

2 SIGNAGE, ROOM ID - TYPE A.1, B.1, & B.2

3" = 1'-0"

SIGNAGE SCHEDULE

DOOR NO.	ROOM NAME	SIGN TEXT	SIGN TYPE
104	BATT. CHIEF OFFICE	BATTALION CHIEF OFFICE	A.1
106	BATT. CHIEF BUNKER GEAR	BATTALION CHIEF BUNKER GEAR	A.1
107L	LAWN STORAGE	STORAGE	A.1
112A	EXISTING MECHANICAL	MECHANICAL	A.1
113	BED STORAGE	BED STORAGE	A.1
117	OFFICE	OFFICE	A.1
124	RR	(RESTROOM SIGNAGE)	B.2
129	ADA RR	(ADA ACCESSIBLE RESTROOM SIGNAGE)	B.1
130	RR	(RESTROOM SIGNAGE)	B.2
133	ADA RR	(ADA ACCESSIBLE RESTROOM SIGNAGE)	B.1
134	RR	(RESTROOM SIGNAGE)	B.2
137	ADA RR	(ADA ACCESSIBLE RESTROOM SIGNAGE)	B.1
142	LAUNDRY	LAUNDRY	A.1
143	WATCH OFFICE	WATCH OFFICE	A.1
145	ADA RR	(ADA ACCESSIBLE RESTROOM SIGNAGE)	B.1
146	EMS STORAGE	EMS STORAGE	A.1
149	BUNKER GEAR STORAGE PROTECTED-A	BUNKER GEAR STORAGE PROTECTED-A	A.1
150	BUNKER GEAR STORAGE-B	BUNKER GEAR STORAGE-B	A.1
151	BUNKER GEAR STORAGE-C	BUNKER GEAR STORAGE-C	A.1
152	DECON/ EXTRACTOR	DECON/ EXTRACTOR	A.1
X155			
X157			
X158			
X160			
X161			

Architects Design Group

Architects and Planners

I.S.K. Reeves V, F.A.I.A.
Ian A. Reeves, A.I.A.
Susan Gantt A.I.A., LEED-AP

333 N. Knowles Ave.
Winter Park, Florida 32789
(407) 647-1706

Corporate Registration Number: BR1177

REGISTERED ARCHITECT IAN A. REEVES 22797 STATE OF TEXAS

06.05.2020

FIRE STATION NO.5

CITY OF LONGVIEW

100% BID SET

The architect hereby expressly reserves his common law copyright and other property rights in these drawings. These drawings shall not be reproduced without written permission and consent of the architect, nor are they to be assigned to any party without first obtaining written permission and consent.

REVISIONS/ADDENDA

Number	Description	Date Issued

SHEET TITLE:

INTERIOR SIGNAGE SCHEDULE

scale: As indicated
drawn: NG
checked: SZ
approved: MBV
date: June 5, 2020

PROJECT NUMBER:

1006

SHEET NUMBER:

ID-501

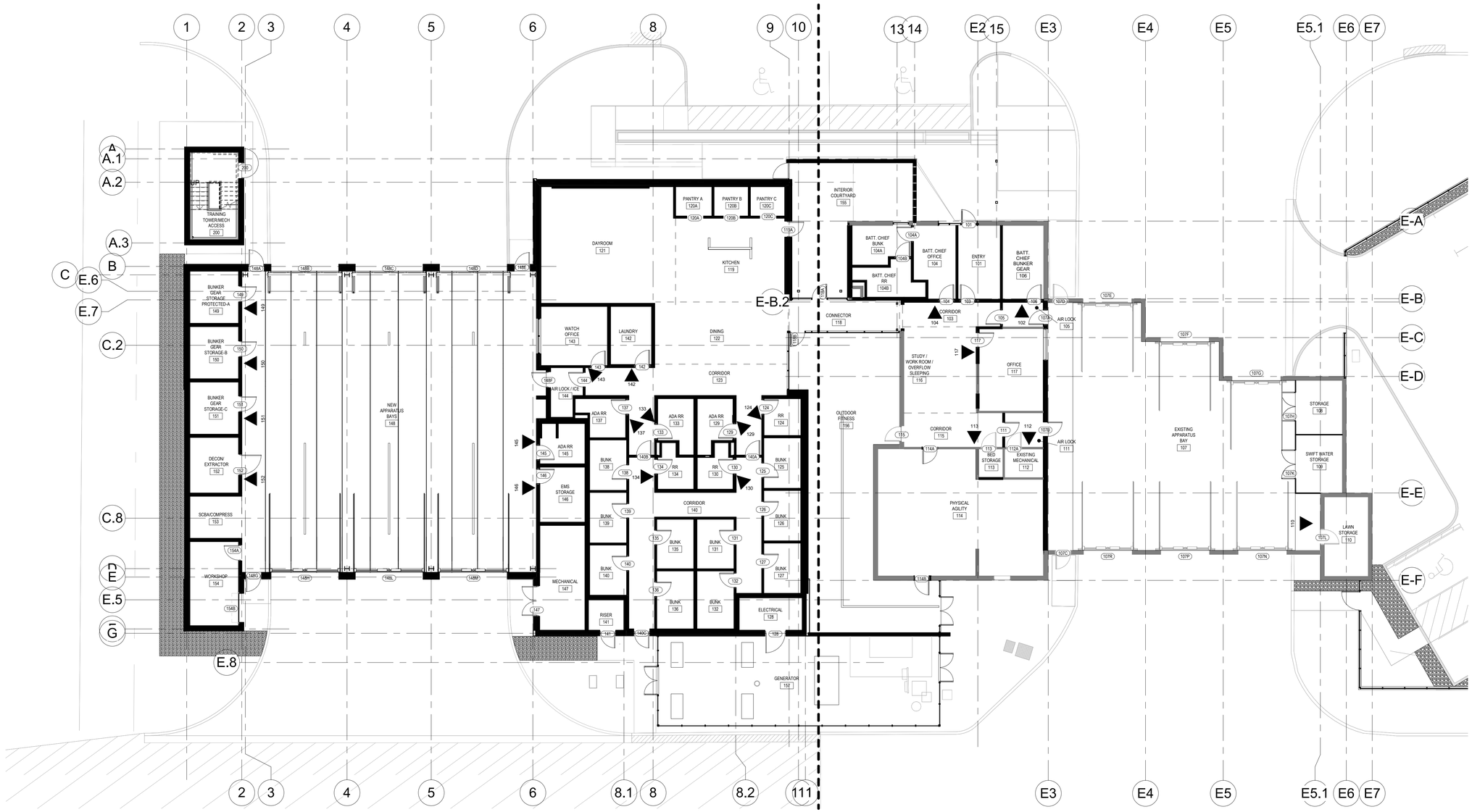

1 SIGNAGE INSTALLATION FLOOR PLAN

3/32" = 1'-0"

SIGNAGE PLAN LEGEND

▲ LOCATION OF SIGN

145 SIGN NUMBER

KEY PLAN

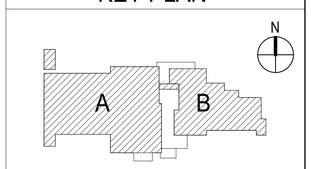

Architects Design Group

Architects and Planners

I.S.K. Reeves V, F.A.I.A.
Ian A. Reeves, A.I.A.
Susan Gantt A.I.A., LEED-AP

333 N. Knowles Ave.
Winter Park, Florida 32789
(407) 647-1706

Corporate Registration
Number: BR1177

REGISTERED ARCHITECT IAN A. REEVES 22797 STATE OF TEXAS

06.05.2020

FIRE STATION NO.5

CITY OF LONGVIEW

100% BID SET

The architect hereby expressly reserves his common law copyright and other property rights in these drawings. These drawings shall not be reproduced without written permission and consent of the architect, nor are they to be assigned to any party without first obtaining written permission and consent.

REVISIONS/ADDENDA

Number	Description	Date Issued

SHEET TITLE:

SIGNAGE INSTALLATION PLAN

scale: As indicated
drawn: NG
checked: GG
approved: MBV
date: June 5, 2020

PROJECT NUMBER:

1006

SHEET NUMBER:

ID-502

GENERAL NOTES:

1. THE SCOPE OF THE WORK SHALL INCLUDE THE FURNISHING AND INSTALLATION OF THE NECESSARY MATERIAL AND LABOR TO ACCOMPLISH THE WORK INDICATED BY THE DRAWINGS AND AS SPECIFIED. ALL WORK BY CONTRACTOR SHALL CONFORM TO ALL APPLICABLE FEDERAL, STATE AND LOCAL BUILDING CODES.

2. CONTRACTOR SHALL BE RESPONSIBLE FOR REVIEWING THE CONTRACT DOCUMENTS AND EXISTING CONDITIONS AT THE JOB SITE BEFORE SUBMITTING PROPOSALS. SUBMISSION OF PROPOSALS SHALL BE TAKEN AS EVIDENCE THAT SUCH INSPECTION HAS TAKEN PLACE. THE CONTRACTOR SHALL BECOME FAMILIAR WITH THE COMPLETE SET OF CONSTRUCTION DOCUMENTS. SUBMISSION OF PROPOSAL SHALL INDICATE THAT THE CONTRACTOR HAS INCLUDED ALL WORK AND MATERIALS NECESSARY FOR A FULLY FUNCTIONAL AND COORDINATED HVAC SYSTEM THAT MEETS THE INTENT OF THE DOCUMENTS.

3. MATERIALS AND EQUIPMENT FURNISHED UNDER THE CONTRACT SHALL BE NEW AND SHALL BEAR THE U.L. LABEL WHERE APPLICABLE, UNLESS NOTED OTHERWISE. ALL WORK SHALL BE GUARANTEED AGAINST DEFECTIVE MATERIALS AND WORKMANSHIP FOR A PERIOD OF NOT LESS THAN ONE (1) YEAR AFTER COMPLETION AND ACCEPTANCE BY THE OWNER.

4. CONTRACTOR SHALL INSTALL SYSTEMS WITHOUT INTERFERENCE AND IN STRICT COORDINATION WITH OTHER TRADES.

5. MATERIALS AND WORKMANSHIP SHALL COMPLY WITH THE CONTRACT DOCUMENTS AND APPLICABLE CODES AND STANDARDS. IN CASE OF DIFFERENCE BETWEEN APPLICABLE CODES AND STANDARDS AND THE CONTRACT DOCUMENTS, THE CONTRACTOR SHALL PROMPTLY NOTIFY THE OWNER'S REPRESENTATIVE IN WRITING OF SUCH DIFFERENCE. SHOULD THE CONTRACTOR PERFORM ANY WORK THAT DOES NOT COMPLY WITH REQUIREMENTS OF APPLICABLE CODES AND STANDARDS, THE CONTRACTOR SHALL BEAR ALL COSTS ARISING IN CORRECTING SUCH DEFECTS. APPLICABLE CODES AND STANDARDS SHALL INCLUDE ALL ORDINANCES, UTILITY COMPANY REGULATIONS, AND APPLICABLE REQUIREMENTS OF NATIONALLY ACCEPTED CODES AND STANDARDS. SHOULD THE CONTRACTOR SUPPLY EQUIPMENT DIFFERING FROM THE SPECIFIED ITEMS IN THE CONTRACT DOCUMENTS WITHOUT NOTIFICATION TO THE OWNER'S REPRESENTATIVE, THE CONTRACTOR SHALL BEAR ALL COSTS TO UPGRADE DEFICIENCIES ARISING FROM SUCH.

6. PROVIDE ACCESS, INCLUDING NECESSARY ACCESS DOORS, FOR EQUIPMENT REQUIRING OPERATION AND/OR MAINTENANCE. LOCATE ALL EQUIPMENT SUCH THAT OPERATION OR MAINTENANCE IS NOT RESTRICTED.

7. DO NOT RUN PIPING OR DUCTWORK, OR LOCATE EQUIPMENT, WITH RESPECT TO SWITCHBOARDS, PANELBOARDS, POWER PANELS, MOTOR CONTROL CENTERS OR DRY TYPE TRANSFORMERS WITHIN APPLICABLE CODE ALLOWANCES OR MANUFACTURER'S RECOMMENDATIONS, WHICHEVER IS GREATER.

8. REFER TO ARCHITECTURAL REFLECTED CEILING PLANS FOR EXACT LOCATIONS OF GRILLES, DIFFUSERS AND FOR CEILING TYPE.

9. MECHANICAL CONTRACTOR SHALL FIELD VERIFY CONDITIONS DURING CONSTRUCTION.

10. INITIAL BALANCING OF THE AIR SYSTEM SHALL BE PROVIDED BY THE MECHANICAL CONTRACTOR FOR ALL SYSTEMS TO PROVE SYSTEM IS OPERATIONAL. THE GENERAL CONTRACTOR SHALL PROVIDE FINAL SYSTEM BALANCING, TO BE PERFORMED BY AN INDEPENDENT CONTRACTOR MEETING THE REQUIREMENTS IN THE SPECIFICATIONS.

11. GAUGES FOR SHEET METAL DUCTS SHALL BE PER SMACNA STANDARDS.

12. ALL DUCT RUNOUTS TO INDIVIDUAL DIFFUSERS ARE SAME SIZE AS DIFFUSER NECK, UNLESS NOTED OTHERWISE, AND REQUIRE DAMPERS AT TAKEOFF FROM MAIN DUCT WHEREVER POSSIBLE. WHERE DIFFUSER IS SHOWN BELOW MAIN DUCT, DAMPER SHALL BE INSTALLED INSTALLED AT TAKEOFF FROM MAIN DUCT.

13. ALL DUCT JOINTS, BRACES, AND SUPPORTS SHALL BE PER SMACNA STANDARDS OF CONSTRUCTION. JOINTS SHALL BE SEALED INSIDE AND OUTSIDE WITH AN APPROVED DUCT SEALANT.

14. ALL DUCTS SHALL BE INSTALLED DEAD LEVEL AND/OR PLUMB. TRANSITIONS SHALL BE MADE FROM THE BOTTOM AND/OR SIDE OF THE DUCT.

15. ALL DUCT DIMENSIONS SHOWN ARE CLEAR INSIDE DIMENSIONS.

16. ALL ELBOWS IN SUPPLY AND RETURN DUCTS SHALL CONTAIN DOUBLE THICKNESS OR AIRFOIL TURNING VANES.

17. VERIFY LOCATION OF ALL THERMOSTATS, HUMIDISTATS AND CARBON DIOXIDE DETECTORS WITH ARCHITECT.

18. USE FLEX DUCT FOR ALL RUNOUTS TO DIFFUSERS. RUNOUTS SHALL BE SAME SIZE AS AS DIFFUSER NECK. SEE SCHEDULE FOR SIZES. FLEX DUCT SHALL NOT EXCEED 5' IN LENGTH

19. USE FLEXIBLE CONNECTIONS TO ALL UNITS WITH ROTATING EQUIPMENT

20. CONTRACTOR SHALL FURNISH AND INSTALL THERMOSTATS, HUMIDISTAT AND CARBON DIOXIDE DETECTORS FOR EACH SPACE. LOCATE ADJACENT TO LIGHT SWITCH OR AS DIRECTED BY OWNER IN SPACES SERVED BY EACH UNIT. PROVIDE A PERMANENT LABEL AFFIXED TO THE SENSORS INDICATING ZONE NUMBER.

21. CONTRACTOR SHALL FURNISH AND INSTALL FIRE DAMPERS IN ALL DUCTWORK PENETRATIONS OF FIRE RATE WALLS.

22. ALL DUCTWORK WITHIN 10 FEET OF THE AIR HANDLERS, EXTERIOR DUCTWORK AND EXPOSED DUCTWORK SHALL BE INTERNALLY LINED WITH INSULATION.

23. HIGH EFFICIENCY TAPS AND FITTINGS SHALL BE USED.

24. FLEXIBLE DUCT SHALL BE INSULATED METALLIC TYPE AND SHALL NOT EXCEED 5 FEET IN LENGTH.

25. COORDINATE ALL DUCT ROUTING WITH OTHER TRADES. DO NOT BIND OR TWIST FLEX DUCT IN ORDER TO REACH DIFFUSERS.

26. DO NOT SUPPORT DUCT FROM UTILITY PIPES OR OTHER DUCT.

27. ALL DUCT PENETRATIONS THROUGH WALLS SHALL BE SEALED ON BOTH THE INSIDE AND THE OUTSIDE FACE OF THE PENETRATION. THE PERIMETER SHALL BE TRIMMED OUT WITH A SHEET METAL FLASHING.

28. CONTRACTOR SHALL INSTALL ALL VOLUME DAMPERS FOR EASY ACCESS IN EACH BRANCH DUCT AND TAKEOFF TO FACILITATE BALANCING.

29. ROUTE REFRIGERANT LINES SLOPED AS RECOMMENDED BY MANUFACTURER FOR LONG RUNS. PROVIDE REFRIGERANT FILTER, SIGHT GLASS, ACCUMULATOR AND ANY OTHER APPARATUS REQUIRED BY THE MANUFACTURER. SIZE REFRIGERANT LINES PER MANUFACTURERS RECOMMENDATIONS.

30. MECHANICAL CONTRACTOR SHALL INSTALL FIRE ALARM CONTRACTOR PROVIDED SMOKE DETECTOR IN SUPPLY AND RETURN DUCTS AT EACH UNIT WITH A SUPPLY AIR FLOW OF 2000 CFM OR MORE.

DEMOLITION GENERAL NOTES:

1. REFER TO ARCHITECTURAL DEMOLITION DRAWINGS. THESE DRAWINGS ARE PROVIDED FOR THE CONTRACTOR'S CONVENIENCE, AND ARE NOT INTENDED TO REPRESENT ALL DEMOLITION WORK REQUIRED TO COMPLETE THE PROJECT. THE CONTRACTOR WILL BE RESPONSIBLE FOR THE CAREFUL STUDY OF ALL PROPOSED WORK, THE VERIFICATION OF ALL FIELD CONDITIONS, AND THE PERFORMANCE OF COMPLETE DEMOLITION WORK RELATED THERETO.
2. REFER TO ARCHITECTURAL FOR THE PHASING PLAN OF THE PROJECT. THE EXISTING BUILDING IS TO REMAIN FULLY OPERATIONAL DURING CONSTRUCTION OF THE NEW BUILDING. THEN DEMOLITION AND NEW WORK WILL TAKE PLACE IN THE EXISTING BUILDING, ONCE THE CITY HAS RELOCATED TO THE NEW BUILDING.
3. ALL EXISTING DUCTWORK IN THE EXISTING BUILDING IS TO BE DEMOLISHED.
4. ALL EXISTING MECHANICAL EQUIPMENT IS TO BE SALVAGED AND DELIVERED TO THE OWNER.
5. CONTRACTOR SHALL COORDINATE ALL DEMOLITION ACTIVITIES WITH OWNER PRIOR TO IMPLEMENTING DEMOLITION ACTIVITIES.
6. CONTRACTOR SHALL COORDINATE ALL SHUTDOWNS AND TESTING WITH THE OWNER.
7. ALL ITEMS CALLED OUT FOR "SALVAGE " SHALL BE CLEANED AND USED ON THIS PROJECT OR CLEANED AND DELIVERED TO THE OWNER IN AN ORDERLY MANNER.
8. ALL DEMOLITION MATERIALS NOT SALVAGED SHALL BECOME THE PROPERTY OF THE CONTRACTOR AND SHALL BE DISPOSED OF OFF SITE.
9. ALL ROOF AND WALL PENETRATIONS SHALL BE REPAIRED AND SEALED WATER TIGHT TO MAINTAIN THE BUILDING ENVELOPE. REFER TO ARCHITECTURAL FOR DETAILS.

Architects Design Group

Architects and Planners

I.S.K. Reeves V, F.A.I.A.
Ian A. Reeves, A.I.A.
Susan Gantt A.I.A., LEED-AP

333 N. Knowles Ave.
Winter Park, Florida 32789
(407) 647-1706

Corporate Registration
Number: BR1177

STATE OF TEXAS
JAMES K HOLLAND
92702
LICENSED
PROFESSIONAL ENGINEER
5/8/2020

FIRE STATION NO.5

CITY OF LONGVIEW

100% BID SET

The architect hereby expressly reserves his common law copyright and other property rights in these drawings. These drawings shall not be reproduced without written permission and consent of the architect, nor are they to be assigned to any party without first obtaining written permission and consent.

REVISIONS/ADDENDA

Number	Description	Date Issued

KSA

140 E. Tyler Street, Suite 600
Longview, Texas 75601
T. 903-236-7700 F. 888-224-9418
www.ksaeng.com
TBPE FIRM REGISTRATION NO.: F-1356

SHEET TITLE:

FOOR PLAN - LEVEL ONE

scale:
drawn:
checked:
approved:
date: JUNE 5,2020
PROJECT NUMBER:

SHEET NUMBER:

M-101

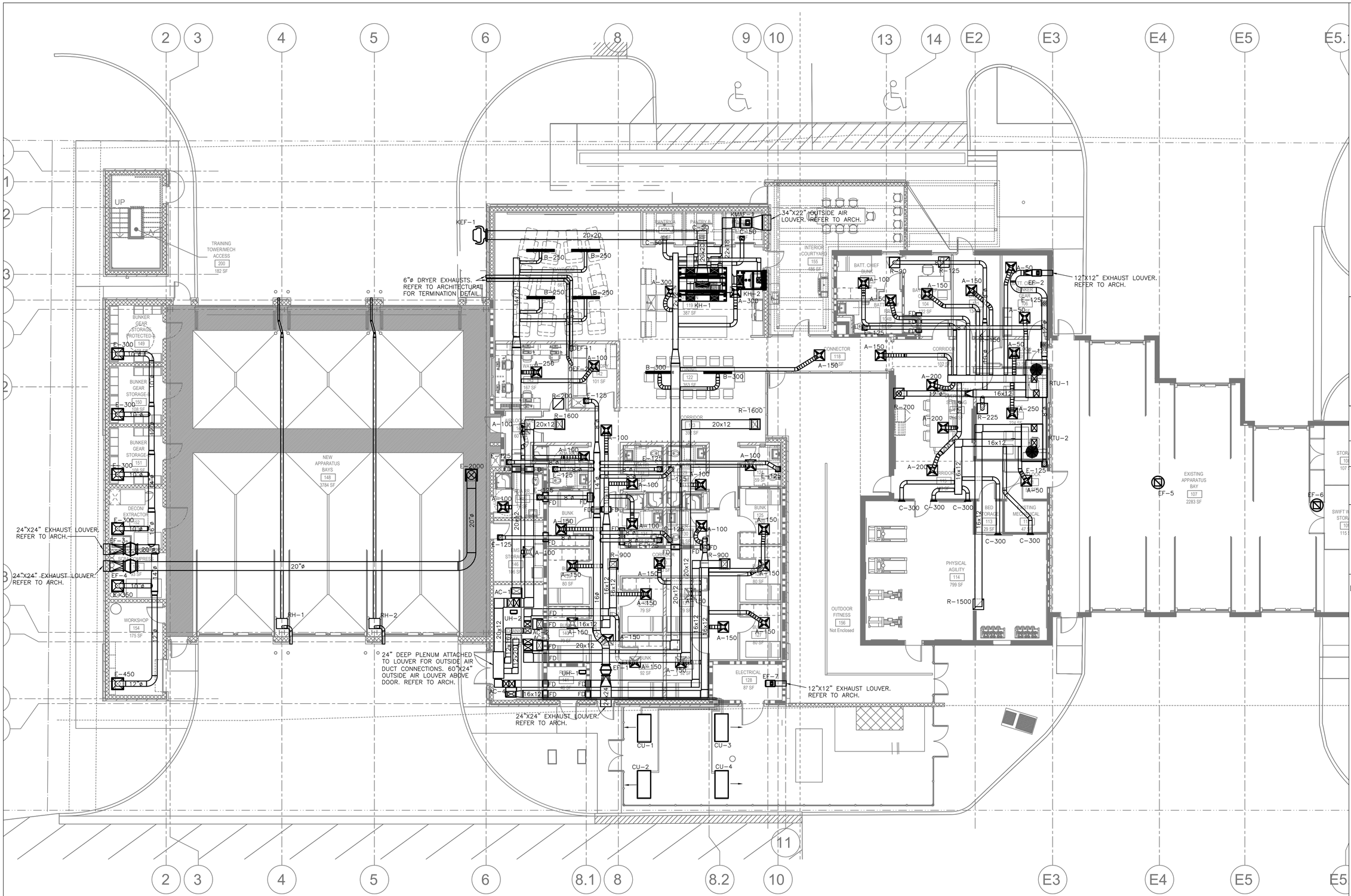

1 FIRST FLOOR PLAN
1/8" = 1'-0"

Architects Design Group

Architects and Planners

I.S.K. Reeves V, F.A.I.A.
Ian A. Reeves, A.I.A.
Susan Gantt A.I.A., LEED-AP

333 N. Knowles Ave.
Winter Park, Florida 32789
(407) 647-1706

Corporate Registration Number: BR1177

STATE OF TEXAS
JAMES K HOLLAND
92702
LICENSED ARCHITECT
6/10/2020

FIRE STATION NO.5

CITY OF LONGVIEW

CONSTRUCTION SET

The architect hereby expressly reserves his common law copyright and other property rights in these drawings. These drawings shall not be reproduced without written permission and consent of the architect, nor are they to be assigned to any party without first obtaining written permission and consent.

REVISIONS/ADDENDA

Number	Description	Date Issued

KSA

140 E. Tyler Street, Suite 600
Longview, Texas 75601
T. 903-236-7700 F. 888-224-9418
www.ksaeng.com
TBPE FIRM REGISTRATION NO.: F-1356

SHEET TITLE:

FOOR PLAN - LEVEL ONE

scale:
drawn:
checked:
approved:
date: 06.05.2020
PROJECT NUMBER:

SHEET NUMBER:

M-101

HEAT PUMP SPLIT SYSTEM - SINGLE ZONE VAV

MARK	CFM	MFG. USED IN DESIGN **AAON**	ELECTRICAL DATA	MOCP (AH/CU)	MCA (AH/CU)	HEAT INPUT (MBH)	COOLING CAPACITY (MBH) TOTAL	COOLING CAPACITY (MBH) SENS.	ESP (IN)	UNIT WEIGHTS (LB.) AH/CU	REMARKS: PROVIDE
AC/CU-1, 3	1200	V3/CFA	208/3/60	15/25	7/17	72	41	30	0.5	810/358	ALL
AC/CU-2, 4	1600	V3/CFA	208/3/60	15/25	7/17	72	50	38	0.5	810/550	ALL

Remarks:

1. MERV 8 FILTERS	4. DOUBLE WALL CONSTRUCTION	7. MODULATING HOT GAS REHEAT	10. MODULATING GAS HEAT	13. COMPRESSOR SOUND BLANKET
2. ECONOMIZER	5. STAINLESS STEEL DRAIN PAN	8. ADJUSTABLE COMPRESSOR LOCKOUT	11. COIL HAIL GUARDS	14. 5 YEAR COMPRESSOR WARRANTY
3. BACNET INTERFACE	6. VARIABLE SPEED SUPPLY FAN	9. VARIABLE CAPACITY COMPRESSOR	12. ECM CONDENSER FANS	15. VERTICAL AHU

AIR DEVICE SCHEDULE

DESIGNATION	A					B	C	E	R
DESCRIPTION	LOUVERED FACE CEILING DIFFUSER 24 x 24 MODULE					LINEAR SLOT DIFFUSER 2" SLOT 5FT LONG	LOUVERED FACE SINGLE DEFLECTION SUPPLY GRILLE	GRID FACED CEILING EXHAUST GRILLE	GRID FACED CEILING RETURN GRILLE
SUP	•					•	•		
RET.						•	•	•	•
EXH								•	•
TYPE MOUNTING	T-BAR OR SURFACE					T-BAR OR SURFACE	T-BAR OR SURFACE	T-BAR OR SURFACE	T-BAR OR SURFACE
MATERIAL	ALUMINUM					ALUMINUM	ALUMINUM	ALUMINUM	ALUMINUM
FINISH	OFF-WHITE					OFF-WHITE (FRAME)	OFF-WHITE (FRAME)	OFF-WHITE (FRAME)	OFF-WHITE (FRAME)
OPPOSED BLADE DAMPER	AT GYP. BD. CLG.					AT GYP BD CLG	AT GYP BD CLG	YES	YES
MAX. NC	16	19	22	24	26	20	20	20	20
MAX. CFM	160	280	430	630	850	VARIES	VARIES	VARIES	VARIES
MAX NECK VEL. FPM	800	800	800	800	800	500	500	500	500
MAX S.P. DROP IN WC	0.08					0.05	0.05	0.05	0.05
NECK SIZE INCHES	6"Ø	8"Ø	10"Ø	12"Ø	14"Ø	AS REQUIRED	AS REQUIRED	AS REQUIRED	AS REQUIRED
MFR & MODEL #	TITUS TMS					TITUS FL20	TITUS 301 RL SS	TITUS 50F	TITUS 50F

REMARKS: INSULATE THE BACK OF ALL SUPPLY DIFFUSERS AND GRILLES TO PREVENT CONDENSATION.

FAN SCHEDULE

MARK	EF-1	EF-2, EF-7	EF-3	EF-4	EF-5	EF-6	DEF-1, 2
TYPE	INLINE	INLINE	INLINE	INLINE	ROOFTOP	ROOFTOP	DRYER EXHAUST
CFM	1250	500	2000	2000	2000	2000	150
S.P.	1.5	1.0	1.0	1.5	0.5	0.5	0.5
DRIVE	BELT	BELT	BELT	BELT	BELT	BELT	DIRECT
HP	2	3/4	1	1-1/2	1/2	1/2	1/20
V/PH	208/3	208/3	208/3	208/3	208/3	208/3	120/1
MANUF.	COOK	COOK	COOK	COOK	COOK	COOK	FANTECH
MODEL	12AFB C	12AFB C	16AFB C	16AFB C	135C15D	135C15D	DBF4XLT

NOTES
1 PROVIDE HANGER KIT WITH VIBRATION ISOLATION FOR ALL FANS.
2 PROVIDE DISCONNECT SWITCH ON ALL FANS.
3 PROVIDE MANUFACTURER'S SPEED CONTROLLER FOR ALL DIRECT DRIVE FANS.
4 INTERLOCK DRYER EXHAUST FANS WITH RESPECTIVE DRYER.

GAS RADIANT HEATER SCHEDULE

MARK	RH-1, 2
SERVICE	GENERAL HEATING
MANUFACTURER	ROBERTS-GORDON
MODEL NO.	CTH2V-100
FUEL TYPE	NATURAL GAS
INPUT BTUH	100,000 EA
INPUT PRESSURE (MIN/MAX) IN. WC.	4.6/14.0
GAS CONNECTION NPT	1/2"
ELECTRICAL SUPPLY (V/ø)	120/1
AMPS	1 A
HEAT EXCHANGER TUBE DIAMETER (IN)	4ø

NOTES: 1. INSTALL PER MANUFACTURER INSTRUCTIONS AND RECOMMENDATIONS
2. PROVIDE WITH SIDE REFLECTORS
3. REFER TO WIRING DIAGRAM DETAIL

UNIT HEATER SCHEDULE

	UH-1	UH-2
MANUFACTURER	MARKEL	MARKEL
MODEL NO.	5100	5100
ELECTRICAL CHARACTERISTICS (V/HZ/ϕ)	208/60/3	208/60/3
ELECTRIC HEAT KW	5	5
LOCATION	FIRE RISER ROOM	MECHANICAL ROOM

NOTES:
1. PROVIDE UNIT HEATER WITH SUSPENDED MOUNTING HARDWARE AND INTEGRAL THERMOSTAT SET TO 40°F

ROOFTOP UNIT UNIT SCHEDULE

MARK	RTU-1,2	
MODEL	GBC048A3	
GROSS COOLING	51,100	
CFM	1600	
OUTSIDE AIR-CFM	500	
SEER	14	
ARI NET COOLING	49,500	
HEATING PERFORMANCE - NATURAL GAS		
HEATING INPUT (MBH)	115	
CONDENSER		
NO. OF FANS / TYPE	1 / PROPELLER	
REFRIGERANT	HFC-410A	
NUMBER OF COMPRESSORS	1	
EVAPORATOR FAN		
NO OF FANS / TYPE	1 / FC	
FILTERS	(4) 16X16X2	
EVAPORATOR COIL		
FACE AREA	6.44 SQ.FT.	
CONDENSATE DRAIN SIZE	3/4"	
ELECTRICAL DATA - SINGLE POINT CONNECTION		
VOLTS	208	
PHASE	3	
MINIMUM CIRCUIT AMPACITY	23.6	
MAX FUSE SIZE	35	

MANUFACTURER - TRANE

NOTE: MAXIMUM FACE VELOCITY SHALL BE 500 FPM
PROVIDE OUTSIDE AIR AND RELIEF AIR HOOD AND MODULATING DAMPERS
PROVIDE ENTHALPY BASED ECONOMIZER CYCLE

Architects Design Group

Architects and Planners

I.S.K. Reeves V, F.A.I.A.
Ian A. Reeves, A.I.A.
Susan Gantt A.I.A., LEED-AP

333 N. Knowles Ave.
Winter Park, Florida 32789
(407) 647-1706

Corporate Registration Number: BR1177

STATE OF TEXAS
JAMES K HOLLAND
92702
LICENSED PROFESSIONAL ENGINEER
5/8/2020

FIRE STATION NO.5

CITY OF LONGVIEW

100% BID SET

The architect hereby expressly reserves his common law copyright and other property rights in these drawings. These drawings shall not be reproduced without written permission and consent of the architect, nor are they to be assigned to any party without first obtaining written permission and consent.

REVISIONS/ADDENDA

Number	Description	Date Issued

KSA
140 E. Tyler Street, Suite 600
Longview, Texas 75601
T. 903-236-7700 F. 888-224-9418
www.ksaeng.com
TBPE FIRM REGISTRATION NO.: F-1356

SHEET TITLE:

MECHANICAL SCHEDULES

scale:
drawn:
checked:
approved:
date: JUNE 5,2020
PROJECT NUMBER:

SHEET NUMBER:

M-201

Belt Drive Centrifugal Inline Fan

MARK INFORMATION		FAN INFORMATION						MOTOR INFORMATION					
QTY	MARK	MODEL	VOLUME (CFM)	TOTAL EXTERNAL SP (IN WG)	FAN RPM	OPERATING POWER (HP)	WEIGHT (LB.)	SIZE (HP)	V/C/P	ENCLOSURE	MOTOR RPM	WINDINGS	NEC FLA*
1	KMAF-1	BSQ-140-10	2,790	0.4	1,603	0.85	134	1	208/60/3	OP	1725	1	5

*NEC FLA - Based on tables 150 or 148 of National Electrical Code 2002. Actual motor FLA may vary, for sizing thermal overload, consult factory.

KMAF-1 : SELECTED OPTIONS AND ACCESSORIES

No UL Listing
Switch, NEMA-1, Toggle, Shipped with Unit
Damper Shipped Loose, Inline, WD-330-PB-20X20, Gravity Operated, Not Coated
Isolators & Brackets, Spring, Hanging, 1 Inch (Qty 4, PN: 850345) (Shipped Loose)

Belt Drive Upblast Centrifugal Wall Exhaust Fan

MARK INFORMATION		FAN INFORMATION						MOTOR INFORMATION					
QTY	MARK	MODEL	VOLUME (CFM)	TOTAL EXTERNAL SP (IN WG)	FAN RPM	OPERATING POWER (HP)	WEIGHT (LB.)	SIZE (HP)	V/C/P	ENCLOSURE	MOTOR RPM	WINDINGS	NEC FLA*
1	KEF-1	CUBE-180-15	3,488	0.839	1,175	1.06	121	1.5	208/60/3	OP	1725	1	7

*NEC FLA - Based on tables 150 or 148 of National Electrical Code 2002. Actual motor FLA may vary, for sizing thermal overload, consult factory.

KEF-1 : SELECTED OPTIONS AND ACCESSORIES

Sidewall Mounting - Fan Configured for Wall-Mounted Applications
Wall Bracket will be Mounted to the Wall
UL/cUL 762 Listed - "Power Ventilators for Rest. Exh. Appliances"
Switch, NEMA-1, Toggle, Shipped with Unit
Wall Bracket - Galvanized, Under Sized 0.5 in. (Shipped Loose) (PN 916650)
Heat Baffle (Attached)
Bearings with Grease Fittings, L10 life of 100,000 hrs (L50 avg. life 500,000 hrs)

HOOD INFORMATION

HOOD NO.	MARK	MODEL	HOOD DIMENSIONS (IN.)			HOOD CONSTR.	COOKING LOAD / DUTY RATING	EXHAUST						SUPPLY		TOTAL WEIGHT LBS.	SECTION LOCATION
			LENGTH	WIDTH	HEIGHT			TOTAL CFM	COLLAR(S)					MUA CFM	AC CFM		
									WIDTH	LENGTH	DIA.	CFM	S.P.				
1	KH-1	GXEV-108-S	108	48	24	430 SS WHERE EXPOSED	MEDIUM	2700	9	26		2700	0.449	26A	27A	468	SINGLE

HOOD INFORMATION

HOOD NO.	MARK	LIGHTING DETAILS			GREASE FILTRATION DETAILS				UTILITY CABINET(S)				
		FIXTURE TYPE BULB / LAMP INFO	QTY	FOOT CANDLES	TYPE / MODEL MATERIAL	QTY	SIZE (IN.)		LOCATION	FIRE SYSTEM		CONTROLS	
							L	H		TYPE	SIZE	MODEL	INTERFACE
1	KH-1	INCANDESCENT (GLOBE) 100W A19 (BULBS NOT INCL.)	6	51.35	X-TRACTOR STAINLESS STEEL	6	16	20					
						6	20		WALL				

SUPPLY PLENUM INFORMATION

HOOD NO.	MARK	POS.	TYPE	SIZE (IN.)			INSULATED	DAMPER(S)	LED LIGHT(S)		TOTAL CFM	COLLARS								
				L	W	H			SUPPLIED	QTY		TYPE	MOUNTING	QTY	W	L	DIA.	CFM	S.P.	VEL.
1	KH-1	FRONT	ASP	108	14	10	NO	NO	NO		1080	MUA	FACTORY	2	10	16		540	0.06	486
1	KH-1	BACK	ASP	108	14	10	NO	NO	NO		1080	MUA	FACTORY	2	10	16		540	0.06	486

HOOD OPTIONS

UL 710 LISTED W/ OUT EXHAUST FIRE DAMPER - UL #MH11726
18 IN HIGH CEILING ENCLOSURES - FRONT BACK LEFT RIGHT - FIELD INSTALLED
FACTORY MOUNTED EXHAUST COLLAR(S)
WALL UTILITY CABINET 24 IN HIGH 60 IN LONG 12 IN WIDE
PERFORMANCE ENHANCING LIP (PEL) TECHNOLOGY
STANDING SEAM CONSTRUCTION FOR SUPERIOR STRENGTH

HOOD INFORMATION

HOOD NO.	MARK	MODEL	HOOD DIMENSIONS (IN.)			HOOD CONSTR.	COOKING LOAD / DUTY RATING	EXHAUST						SUPPLY		TOTAL WEIGHT LBS.	SECTION LOCATION
			LENGTH	WIDTH	HEIGHT			TOTAL CFM	COLLAR(S)					MUA CFM	AC CFM		
									WIDTH	LENGTH	DIA.	CFM	S.P.				
1	KH-2	GXEW-42-S	42	45	24	430 SS WHERE EXPOSED	MEDIUM	788	8	9		788	0.589	26A	27A	117.25	SINGLE

HOOD INFORMATION

HOOD NO.	MARK	LIGHTING DETAILS			GREASE FILTRATION DETAILS				UTILITY CABINET(S)				
		FIXTURE TYPE BULB / LAMP INFO	QTY	FOOT CANDLES	TYPE / MODEL MATERIAL	QTY	SIZE (IN.)		LOCATION	FIRE SYSTEM		CONTROLS	
							L	H		TYPE	SIZE	MODEL	INTERFACE
1	KH-2	INCANDESCENT (GLOBE) 100W A19 (BULBS NOT INCL.)	1	36.02	X-TRACTOR STAINLESS STEEL	0	16	20					
						2	20		WALL				

SUPPLY PLENUM INFORMATION

HOOD NO.	MARK	POS.	TYPE	SIZE (IN.)			INSULATED	DAMPER(S)	LED LIGHT(S)		TOTAL CFM	COLLARS								
				L	W	H			SUPPLIED	QTY		TYPE	MOUNTING	QTY	W	L	DIA.	CFM	S.P.	VEL.
1	KH-2	FRONT	ASP	42	14	10	NO	NO	NO		630	MUA	FACTORY	1	10	18		630	0.15	504

HOOD OPTIONS

UL 710 LISTED W/ OUT EXHAUST FIRE DAMPER - UL #MH11726
BACK INTEGRAL AIR SPACE - 3 IN WIDE
18 IN HIGH CEILING ENCLOSURES - FRONT LEFT RIGHT - FIELD INSTALLED
FACTORY MOUNTED EXHAUST COLLAR(S)
WALL UTILITY CABINET 24 IN HIGH 45 IN LONG 12 IN WIDE
PERFORMANCE ENHANCING LIP (PEL) TECHNOLOGY
STANDING SEAM CONSTRUCTION FOR SUPERIOR STRENGTH

FIRE SYSTEM INFORMATION

MARK	MODEL	LOCATION	FLOW POINTS		SUPPLY LINE	DETECTION	MARK(S) PROTECTED BY FIRE SYSTEM
			HOODS	PCU			
FIRE PROTECTION	ANSUL R-102 WET CHEMICAL	REMOTE MOUNTED	6 UTILIZED 11 AVAILABLE		CONTINUOUS	FUSIBLE LINK	KH-1 SECTION 1
							KH-2 SECTION 1

FIRE SYSTEM OPTIONS AND ACCESSORIES

FULL INSTALLATION (INCLUDES PRE-PIPED HOOD(S) WITH DETECTION AND FACTORY COORDINATED INSTALL)
CHROME SLEEVES FOR FACTORY PROVIDED APPLIANCES DROPS - INCLUDED
METAL BLOW-OFF CAPS - INCLUDED
GAS VALVE - INCLUDED - MECHANICAL SHUTOFF VALVE, 2", (ANSUL) - PART# ANSULMECHSHUTOFFVALVE200
HOOD SUPPRESSION AGENT - INCLUDED - 3 GAL. - [(1) 3.0 TANK(S)]
REMOTE PULL STATION - STANDARD - INSTALLATION AT SINGLE POINT OF EGRESS

CONTROL INFORMATION

MARK	ELECTRICAL CONTROL PACKAGE		USER INTERFACE		FANS CONTROLLED				
	MODEL	LOCATION	TYPE	LOCATION	MARK	TYPE	VOLT	PHASE	HP
KITCHEN CONTROL PANEL	KFCC	SHIP LOOSE	SWITCHES	ON CONTROL PACKAGE	KEF-1	EXHAUST	208	3	1 1/2
					KMAF-1	SUPPLY	208	3	1

CONTROL FEATURES

CONTROL PANEL ENCLOSURE - 16 GA 300 SERIES STAINLESS STEEL ENCLOSURE (NEMA-1) - DIMENSIONS 12 X 20 X 6
STARTERS PROVIDED IN CONTROL PANEL - QTY 2
2 POSITION LIGHT SWITCH - QTY 1
2 POSITION FAN SWITCH - QTY 1
-FACTORY MOUNTED EXHAUST TEMPERATURE SENSORS - QTY 2
TURN ON EXHAUST IN FIRE
POWER FOR SHUNT TRIP
THERMAL OVERLOADS IN CABINET

Architects Design Group

Architects and Planners

I.S.K. Reeves V, F.A.I.A.
Ian A. Reeves, A.I.A.
Susan Gantt A.I.A., LEED-AP

333 N. Knowles Ave.
Winter Park, Florida 32789
(407) 647-1706

Corporate Registration Number: BR1177

STATE OF TEXAS
JAMES K HOLLAND
92702
LICENSED
PROFESSIONAL ENGINEER
5/8/2020

FIRE STATION NO.5

CITY OF LONGVIEW

100% BID SET

The architect hereby expressly reserves his common law copyright and other property rights in these drawings. These drawings shall not be reproduced without written permission and consent of the architect, nor are they to be assigned to any party without first obtaining written permission and consent.

REVISIONS/ADDENDA

Number	Description	Date Issued

KSA
140 E. Tyler Street, Suite 600
Longview, Texas 75601
T. 903-236-7700 F. 888-224-9418
www.ksaeng.com
TBPE FIRM REGISTRATION NO.: F-1356

SHEET TITLE:

MECHANICAL SCHEDULES

scale:
drawn:
checked:
approved:
date: JUNE 5,2020
PROJECT NUMBER:

SHEET NUMBER:

M-202

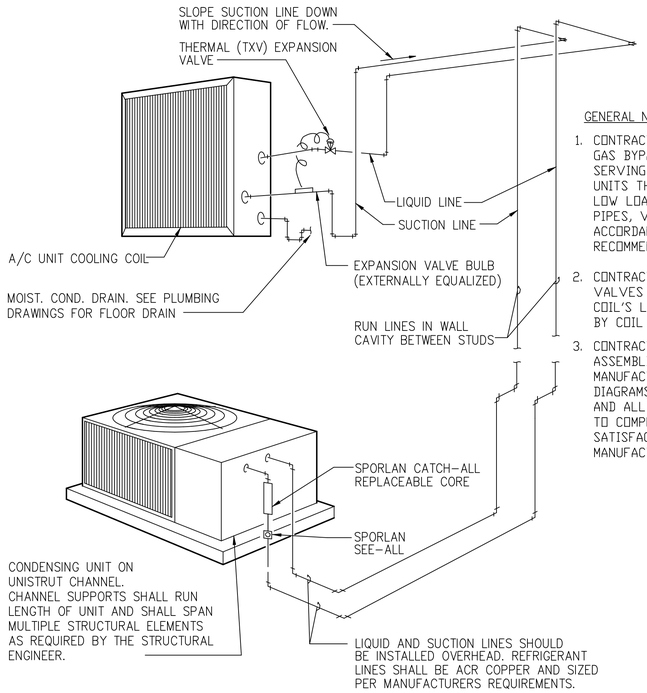

GENERAL NOTES:

1. CONTRACTOR SHALL PROVIDE HOT GAS BYPASS ON ALL UNITS SERVING OUTSIDE AIR UNITS OR UNITS THAT MAY BE SUBJECT TO LOW LOAD CONDITIONS. SIZE ALL PIPES, VALVES, APPURTANANCES IN ACCORDANCE TO MANUFACTURER'S RECOMMENDATIONS AND INSTRUCTIONS.
2. CONTRACTOR SHALL SIZE TXVS AND SOLENOID VALVES FOR SYSTEM IN ACCORDANCE TO COIL'S LOAD CHARACTERISTICS AS INDICATED BY COIL MANUFACTURER.
3. CONTRACTOR IS RESPONSIBLE FOR ASSEMBLING AND SUBMITTING COMPLETE MANUFACTURER APPROVED REFRIGERANT PIPING DIAGRAMS INDICATING SIZING, ROUTING, AND ALL DEVICES/APPURTENANCES NECESSARY TO COMPLETE THE SYSTEM TO THE SATISFACTION OF THE OWNER, ENGINEER AND MANUFACTURER.

1 TYPICAL REFRIGERANT PIPING DETAIL
N.T.S.

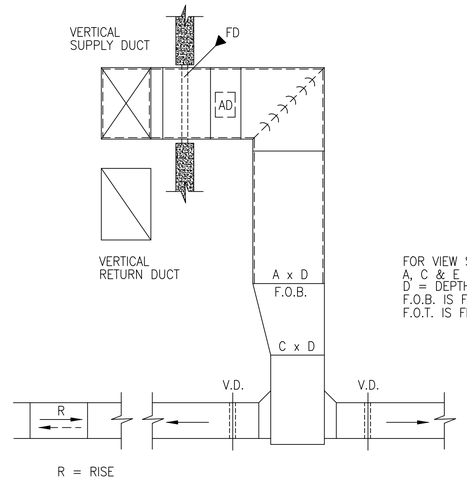

FOR VIEW SHOWN
A, C & E = WIDTHS
D = DEPTH
F.O.B. IS FLAT ON BOTTOM
F.O.T. IS FLAT ON TOP

2 TYPICAL DUCT DETAIL
N.T.S.

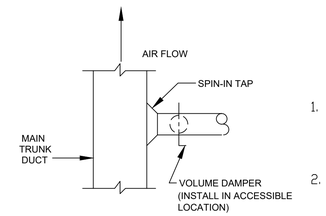

3 TYPICAL SPIN-IN TAP DETAIL

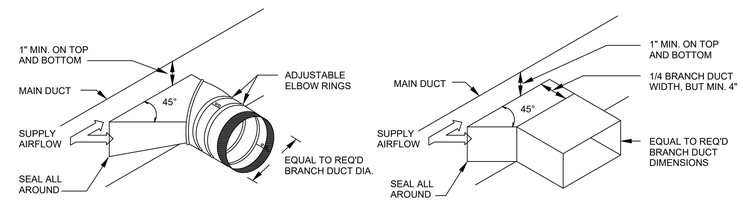

NOTE:
FLEXIBLE RUN-OUT DUCT SHALL NOT EXCEED 6 FT. IN LENGTH.

4 TYPICAL BRANCH TAKEOFF DETAIL

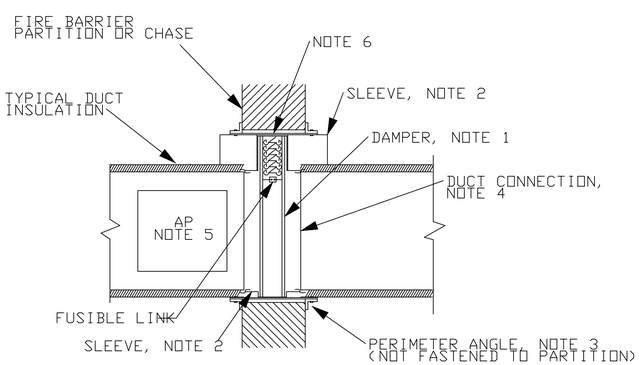

FIRE DAMPER NOTES:

1. FOLLOW DAMPER MANUFACTURERS INSTRUCTIONS, INCLUDING FASTENER OPTIONS AND GAGES FOR SLEEVE AND PERIMETER ANGLES. FIRE DAMPERS MUST BE INSTALLED IN THE PARTITION NOT OUTSIDE THE PENETRATION
2. GALVANIZED SLEEVE: GAGE NOT LESS THAN CONNECTING DUCT. FASTEN SLEEVE TO DAMPER FRAME AND TO PERIMETER ANGLES
3. PERIMETER ANGLES: GALVANIZED STEEL. NOT LESS THE 1-1/2 X 1-1/2 INCHES, 14 GAGE, TO PROVIDE 1 INCH MINIMUM OVERLAP OF OPENING ON ALL 4 SIDES
4. BREAKAWAY DUCT CONNECTION: CONTRACTORS OPTION OF TYPES SHOWN IN SMACNA, SEAL JOINTS.
5. ACCESS PANELS: SIZE AND LOCATION TO PERMIT SERVICING THE FUSIBLE LINK
6. PROVIDE 1/4 TO 1/2 INCH CLEARANCE ON HEIGHT AND WIDTH. FILL OPEN SPACE WITH ROCK WOOL FIRESTOP FIBER.

5 TYPICAL FIRE DAMPER DETAIL
N.T.S.

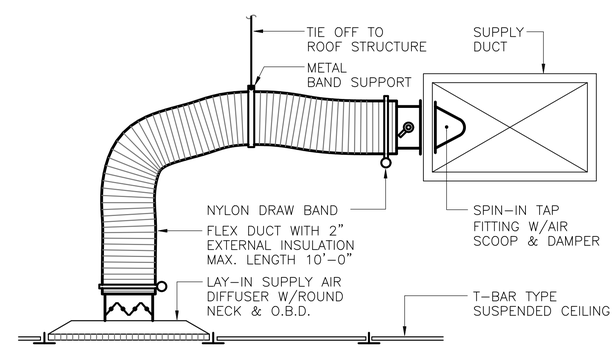

SUPPLY AIR DIFFUSER DETAIL
N.T.S.

Architects Design Group

Architects and Planners
I.S.K. Reeves V, F.A.I.A.
Ian A. Reeves, A.I.A.
Susan Gantt A.I.A., LEED-AP

333 N. Knowles Ave.
Winter Park, Florida 32789
(407) 647-1706

Corporate Registration Number: BR1177

STATE OF TEXAS
JAMES K HOLLAND
92702
LICENSED PROFESSIONAL ENGINEER
5/8/2020

FIRE STATION NO.5

CITY OF LONGVIEW

100% BID SET

The architect hereby expressly reserves his common law copyright and other property rights in these drawings. These drawings shall not be reproduced without written permission and consent of the architect, nor are they to be assigned to any party without first obtaining written permission and consent.

REVISIONS/ADDENDA

Number	Description	Date Issued

KSA
140 E. Tyler Street, Suite 600
Longview, Texas 75601
T. 903-236-7700 F. 888-224-9418
www.ksaeng.com
TBPE FIRM REGISTRATION NO.: F-1356

SHEET TITLE:
MECHANICAL DETAILS

scale:
drawn:
checked:
approved:
date: JUNE 5,2020
PROJECT NUMBER:

SHEET NUMBER:
M-301

TX Firm Registration #F-000553

© 2020 - Moody & Phillips Electric Co.

ELECTRICAL GENERAL NOTES AND SPECIFICATIONS

1. ALL WORK SHALL BE IN ACCORDANCE WITH THE CURRENT EDITION OF THE NATIONAL ELECTRICAL CODE AND ALL APPLICABLE NATIONAL, STATE, AND LOCAL CODES.

2. THE DRAWINGS ARE INTENDED TO COMPLY WITH LISTED CODES, ORDINANCES, REGULATIONS AND STANDARDS. WHERE DISCREPANCIES OCCUR, IMMEDIATELY NOTIFY THE OWNER'S REPRESENTATIVE IN WRITING AND ASK FOR AN INTERPRETATION. SHOULD INSTALLED MATERIALS OR WORKMANSHIP FAIL TO COMPLY, THE CONTRACTOR IS RESPONSIBLE FOR CORRECTING THE IMPROPER INSTALLATION. WHERE SIZES, CAPACITIES, OR OTHER SUCH FEATURES ARE REQUIRED IN EXCESS OF MINIMUM CODE OR STANDARDS REQUIREMENTS, PROVIDE THOSE SPECIFIED OR SHOWN.

3. THE INTENT OF THE DRAWINGS IS TO ESTABLISH THE TYPES OF SYSTEMS AND FUNCTIONS, BUT NOT TO SET FORTH EACH ITEM ESSENTIAL TO THE FUNCTIONING OF THE SYSTEM. ELECTRICAL DRAWINGS ARE GENERALLY SCHEMATIC AND SHOW APPROXIMATE LOCATION AND EXTENT OF WORK. ELECTRICAL DRAWINGS MAY NOT BE DRAWN EXACTLY TO SCALE. THE DRAWINGS DO NOT SHOW EVERY ITEM OF EQUIPMENT, BOX, DEVICE, CONDUCTOR, ETC. REQUIRED FOR THE ELECTRICAL SYSTEM. HOWEVER, THE SCOPE OF WORK INCLUDES PROVIDING ALL LABOR, MATERIAL, AND EQUIPMENT REQUIRED FOR A COMPLETE AND FULLY FUNCTIONAL ELECTRICAL SYSTEM AS SHOWN IN SCHEMATIC FORM ON THE DRAWINGS. THE CONTRACTOR IS RESPONSIBLE FOR COORDINATING EXACT INSTALLATION AND ROUTING OF ALL ELECTRICAL EQUIPMENT WITH OTHER TRADES. IN CASE OF DOUBT AS TO WORK INTENDED, OR IF AMPLIFICATION OR CLARIFICATION IS NEEDED, REQUEST INSTRUCTIONS FROM THE OWNER'S REPRESENTATIVE.

4. WHERE DISCREPANCIES OCCUR BETWEEN DRAWINGS AND/OR SPECIFICATIONS, THE MORE STRINGENT REQUIREMENT SHALL PREVAIL.

5. REVIEW PERTINENT DRAWINGS AND ADJUST THE WORK TO CONDITIONS SHOWN. WHERE DISCREPANCIES OCCUR BETWEEN DRAWINGS, SPECIFICATIONS, AND ACTUAL FIELD CONDITIONS, IMMEDIATELY NOTIFY THE OWNER'S REPRESENTATIVE FOR HIS INTERPRETATION.

6. VISIT THE SITE AND ASCERTAIN THE CONDITIONS TO BE MET AND THE WORK TO BE ACCOMPLISHED IN REMOVING AND MODIFYING THE EXISTING WORK, AND INSTALLING THE NEW WORK. FAILURE TO COMPLY WITH THIS PROVISION SHALL NOT CONSTITUTE GROUNDS FOR ADDITIONAL PAYMENT IN CONNECTION WITH REMOVING OR MODIFYING PART OF THE EXISTING INSTALLATIONS AND INSTALLING NEW OR TEMPORARY WORK.

7. OBTAIN CERTIFICATES OF INSPECTION AND OTHER PERMITS REQUIRED AS A PART OF THE WORK. THE CONTRACTOR SHALL OBTAIN TIMELY INSPECTIONS BY JURISDICTIONAL AUTHORITIES AT SUCH TIMES AS ARE REQUIRED BY THOSE AUTHORITIES. COSTS ASSOCIATED WITH EXPOSING WORK NOT INSPECTED IN A TIMELY MANNER, OR TESTING REQUIRED BY AUTHORITIES TO DEMONSTRATE COMPLIANCE WITH CODES OR STANDARDS SHALL BE THE RESPONSIBILITY OF THE CONTRACTOR. PAY ALL FEES REQUIRED FOR INSPECTION AND PERMITTING.

8. WARRANTY ALL WORKMANSHIP INCLUDING LABOR, MATERIAL, AND EQUIPMENT FOR A PERIOD OF ONE YEAR AFTER SUBSTANTIAL COMPLETION OF THE WORK.

9. AN ACCEPTABLE CONTRACTOR FOR THE ELECTRICAL WORK SHALL HAVE PERSONNEL WITH EXPERIENCE, TRAINING AND SKILL TO PROVIDE A PRACTICAL WORKING SYSTEM. THE CONTRACTOR MAY BE REQUIRED TO FURNISH ACCEPTABLE EVIDENCE OF HAVING INSTALLED NOT LESS THAN THREE SYSTEMS OF SIZE AND TYPE COMPARABLE TO THIS PROJECT. THE SYSTEMS MUST HAVE SERVED SATISFACTORILY FOR NOT LESS THAN THREE YEARS. THE CONTRACTOR SHALL EMPLOY AND UTILIZE LICENSED AND CERTIFIED PROFESSIONALS AND TRADESMEN AS REQUIRED BY LOCAL JURISDICTIONS.

10. VERIFY THE REQUIREMENTS OF THE ELECTRIC UTILITY PROVIDING SERVICE TO THE PROJECT. PROVIDE ALL LABOR, MATERIAL, AND EQUIPMENT REQUIRED BY THE ELECTRIC UTILITY FOR SERVICE TO THE PROJECT. ALL FEES REQUIRED BY THE ELECTRIC UTILITY FOR PROVIDING SERVICE TO THE PROJECT SHALL BE PAID BY THE OWNER.

11. VERIFY THE REQUIREMENTS OF THE TELEPHONE UTILITY PROVIDING SERVICE TO THE PROJECT. PROVIDE ALL LABOR, MATERIAL, AND EQUIPMENT REQUIRED BY THE TELEPHONE UTILITY FOR SERVICE TO THE PROJECT. ALL FEES REQUIRED BY THE TELEPHONE UTILITY FOR PROVIDING SERVICE TO THE PROJECT SHALL BE PAID BY THE OWNER.

12. PROVIDE NEW PRODUCTS OF MANUFACTURERS REGULARLY ENGAGED IN PRODUCTION OF SUCH EQUIPMENT. PROVIDE THE MANUFACTURER'S LATEST STANDARD DESIGN FOR THE TYPE OF PRODUCT SPECIFIED. PRODUCTS MUST CONFORM TO REQUIREMENTS OF THE NATIONAL ELECTRICAL CODE. WHERE UNDERWRITERS' LABORATORIES HAVE SET STANDARDS, LISTED PRODUCTS AND ISSUED LABELS, PRODUCTS USED MUST BE LISTED AND LABELED BY UL. EQUIPMENT MUST BE DELIVERED WITH A HARD SURFACE, FACTORY-APPLIED FINISH SO THAT NO ADDITIONAL FIELD PAINTING IS REQUIRED EXCEPT FOR TOUCH-UP AS REQUIRED.

13. SUBSTITUTE MATERIALS OR EQUIPMENT SUBMITTED UNDER AN "OR EQUAL" BASIS MUST BE SUBMITTED IN WRITING FIVE (5) DAYS PRIOR TO BID OPENING TO THE OWNER'S REPRESENTATIVE. THE PROPOSED SUBSTITUTE SUBMISSION SHALL INCLUDE MANUFACTURER'S PUBLISHED DATA COVERING ALL FEATURES OF THE MATERIAL OR EQUIPMENT.

14. EQUIPMENT SELECTED MUST CONFORM TO THE BUILDING FEATURES AND MUST BE COORDINATED WITH THEM. DO NOT PROVIDE EQUIPMENT WHICH WILL NOT SUIT ARRANGEMENT AND SPACE LIMITATIONS. WHERE EQUIPMENT IS DESCRIBED BY MANUFACTURER'S DESIGNATIONS, YET ALTERNATE MANUFACTURERS ARE DESIGNATED IN THE CONTRACT DRAWINGS AS ACCEPTABLE SUPPLIERS, SPATIAL CONSIDERATIONS WILL BEAR EQUALLY WITH PERFORMANCE CRITERIA IN DETERMINING THE ACCEPTABILITY OF ALTERNATE EQUIPMENT.

15. SCHEDULE POWER OUTAGES TO AVOID INTERFERENCE WITH THE OWNER'S ACTIVITIES. OBTAIN APPROVAL FROM OWNER AT LEAST THIRTY (30) DAYS PRIOR TO THE REQUESTED OUTAGE. IF REQUIRED BY OWNER, PROVIDE A SCHEDULE SHOWING SEQUENCE AND DURATION OF ALL ACTIVITIES DURING THE REQUESTED OUTAGE.

16. SEAL ALL PENETRATIONS OF FIRE RATED PARTITIONS DUE TO THE INSTALLATION OF ELECTRICAL SYSTEMS. EACH PENETRATION SHALL BE SEALED IN SUCH A MANNER THAT THE FIRE RATING OF THE PARTITION IS MAINTAINED.

17. CONCEAL ELECTRICAL WORK IN WALLS, FLOORS, CHASES, UNDER FLOORS, UNDERGROUND AND ABOVE CEILINGS EXCEPT WHERE SHOWN OR SPECIFIED TO BE EXPOSED. EXPOSED IS UNDERSTOOD TO MEAN OPEN TO VIEW. WHERE CONDUIT IS SHOWN CONCEALED BELOW THE SURFACE OF THE FLOOR, CONDUIT MUST BE INSTALLED BELOW THE FLOOR SLAB UNLESS WRITTEN APPROVAL HAS BEEN OBTAINED FROM THE STRUCTURAL ENGINEER OF RECORD TO ALLOW INSTALLATION WITHIN THE CONCRETE SLAB.

18. COORDINATE THE ACTUAL LOCATIONS OF ELECTRICAL SWITCHES, OUTLETS, AND EQUIPMENT WITH BUILDING FEATURES AND EQUIPMENT AS INDICATED ON ARCHITECTURAL, STRUCTURAL, MECHANICAL AND PLUMBING DRAWINGS. REVIEW WITH THE OWNER'S REPRESENTATIVE ANY PROPOSED CHANGES IN SWITCH, OUTLET, OR EQUIPMENT LOCATION. RELOCATION OF SWITCHES, OUTLETS, OR EQUIPMENT BEFORE INSTALLATION, OF UP TO 5 FEET FROM THE POSITION INDICATED, MAY BE DIRECTED BY THE OWNER'S REPRESENTATIVE WITHOUT ADDITIONAL COST.

19. PROVIDE FINAL CONNECTION TO ALL EQUIPMENT REQUIRING ELECTRICAL SERVICE.

20. PROVIDE A LOCAL DISCONNECTING MEANS FOR ALL EQUIPMENT REQUIRING ELECTRICAL SERVICE. SIZE ALL DISCONNECTING MEANS, UNLESS NOTED OTHERWISE ON DRAWINGS, IN ACCORDANCE WITH THE OVERCURRENT PROTECTIVE DEVICE FOR EACH CIRCUIT.

21. VERIFY THE LOCATION AND CONNECTED LOAD OF ALL EQUIPMENT REQUIRING ELECTRICAL SERVICE. ADJUST CIRCUITS SERVING EQUIPMENT AS NEEDED TO COORDINATE WITH THE EQUIPMENT'S CONNECTED LOAD.

22. ALL RACEWAYS SHALL BE RUN PARALLEL OR PERPENDICULAR TO STRUCTURAL MEMBERS, WALLS, CEILINGS OR FLOORS.

23. ALL CONDUIT INSTALLED ABOVE SLAB OR GRADE LEVEL SHALL BE GALVANIZED RIGID STEEL (GRS), INTERMEDIATE METAL CONDUIT (IMC) OR ELECTRICAL METAL TUBING (EMT).

24. CONDUIT FITTINGS SHALL BE MADE OF STEEL OR DIE-CAST MATERIAL AND SHALL BE SET-SCREW OR COMPRESSION TYPE ONLY.

25. ALL EXPOSED HORIZONTAL CONDUIT SHALL BE RUN ABOVE THE BOTTOM CORD OF THE ROOF JOIST. CONDUIT MAY REST ON THE BOTTOM CHORD OF JOISTS, BUT MAY NOT BE SUSPENDED BELOW THE JOISTS.

26. ALL EXPOSED OUTLET AND JUNCTION BOXES SUBJECT TO DAMAGE SHALL BE CAST STEEL. ALL EXPOSED CONDUIT SUBJECT TO DAMAGE SHALL BE GALVANIZED RIGID STEEL.

27. UTILIZE CONDUCTORS WITH INSULATION RATED AT 600V AND INSULATED WITH "THHN" INSULATION IN DRY LOCATIONS AND "THWN" INSULATION IN WET LOCATIONS. CONDUCTORS IN FIXTURE CHANNELS AND OTHER SPECIAL LOCATIONS SHALL BE SPECIFICALLY RATED FOR TEMPERATURE AS REQUIRED BY THE NATIONAL ELECTRICAL CODE.

28. SIZE ALL CONDUCTORS, UNLESS NOTED OTHERWISE ON DRAWINGS, IN ACCORDANCE WITH THE OVERCURRENT PROTECTIVE DEVICE FOR EACH CIRCUIT.

29. CONDUCTORS SHALL BE SIZED BASED UPON USE WITH 75C TERMINATIONS. FURNISH TERMINATIONS RATED AT 75C FOR ALL CONDUCTORS OR DERATE CONDUCTORS FOR USE AT 60C. 90C RATED TERMINATIONS ARE ACCEPTABLE BUT ALL CONDUCTORS USED WITH 90C TERMINATIONS SHALL BE SIZED BASED UPON THE 75C RATING.

30. PROVIDE A GROUNDING CONDUCTOR IN ALL RACEWAYS.

31. INSTALL A SEPARATE NEUTRAL CONDUCTOR FOR EACH PHASE CONDUCTOR ON CIRCUITS SERVING RECEPTACLES.

32. THE MINIMUM CONDUCTOR SIZE SHALL BE #12 AWG.

33. INSTALL #10 AWG CONDUCTORS FOR ALL 20A HOMERUN CIRCUITS LONGER THAN FIFTY (50) FEET.

34. CONCRETE PIERS AND POLE BASES FOR LIGHT POLES AND THEIR ASSOCIATED FIXTURES SHALL BE DESIGNED BY A STRUCTURAL ENGINEER LICENSED TO PRACTICE IN THE STATE OF TEXAS.

35. PROVIDE LAMPS FOR ALL LIGHT FIXTURES SHOWN ON THE DRAWINGS.

36. REFER TO THE ARCHITECTURAL REFLECTED CEILING PLAN FOR EXACT LOCATION OF LIGHT FIXTURES AND CEILING TYPES. VERIFY CEILING TYPES WITH OWNER'S REPRESENTATIVE. COORDINATE LIGHT FIXTURE MOUNTING HARDWARE AND TRIM TYPES WITH ACTUAL CEILING TYPES TO ENSURE PROPER INSTALLATION OF LIGHT FIXTURES.

37. ALL PANELS SHALL BE PANELBOARD CONSTRUCTION WITH COPPER BUSSES AND BOLT-IN CIRCUIT BREAKERS.

38. SERVE ALL HVAC EQUIPMENT WITH HACR RATED CIRCUIT BREAKERS.

39. PROVIDE PANELS WITH AIC RATINGS AS INDICATED ON DRAWINGS. VERIFY AVAILABLE FAULT CURRENT WITH ELECTRICAL UTILITY PROVIDING SERVICE TO THE SITE. INCREASE AIC RATINGS OF PANELS IF REQUIRED TO EXCEED THE AVAILABLE FAULT CURRENT FROM THE ELECTRIC UTILITY.

40. APPROVED MANUFACTURERERS FOR SWITCHGEAR ARE EATON, GENERAL ELECTRIC, SIEMENS, AND SQUARE D.

41. THE OWNER SHALL SELECT THE COLOR OF WIRING DEVICES AND THEIR ASSOCIATED PLATES. VERIFY THE COLOR OF WIRING DEVICES AND PLATES PRIOR TO INSTALLATION. RECEPTACLES SHALL BE HARD USE SPECIFICATION GRADE RATED FOR 125V/20A, EQUAL TO PASS & SEYMOUR #5352 SERIES. SWITCHES SHALL BE HEAVY DUTY SPECIFICATION GRADE RATED FOR 277V/20A, EQUAL TO PASS & SEYMOUR #20AC1 SERIES. APPROVED MANUFACTURERERS FOR WIRINGDEVICES, SHALL BE EATON, HUBBELL, LEVITON, AND PASS & SEYMOUR.

42. BE RESPONSIBLE FOR THE COST OF CUTTING AND PATCHING REQUIRED IN CONNECTION WITH THE WORK. COORDINATE THE WORK TO ELIMINATE UNNECESSARY CUTTING OF CONSTRUCTION. WHERE IT BECOMES NECESSARY TO CUT THROUGH WALLS, FLOORS, CEILINGS AND OTHER CONSTRUCTION TO PERMIT INSTALLATION OF THE WORK, OR TO REPAIR DEFECTIVE WORK, THE COSTS FOR SUCH CUTTING AND PATCHING SHALL BE INCLUDED AS PART OF THE WORK. CUTTING OF STRUCTURAL MEMBERS IS NOT PERMITTED UNLESS SPECIFIC WRITTEN PERMISSION IS GRANTED BY THE OWNER'S REPRESENTATIVE.

43. EXCAVATE AND BACKFILL AS NECESSARY FOR THE INSTALLATION OF THE WORK. EXCAVATE TO THE PROPER DEPTH, WITH ALLOWANCES MADE FOR FLOOR SLABS, FORMS, BEAMS, ETC. COMPACT THE GROUND UNDER CONDUITS BEFORE CONDUITS ARE INSTALLED. INSTALL EXTERIOR CONDUITS WITH A MINIMUM OF 30 INCHES OF COVER BELOW THE FINISHED GRADE, UNLESS OTHERWISE INDICATED. USE SELECTED SOIL FOR BACKFILLING, FREE FROM ROCKS AND DEBRIS, PNEUMATICALLY TAMPED WITH 6 INCH LAYERS TO SECURE A FIELD DENSITY RATIO OF 90 PERCENT. REMOVE FROM THE SITE EXCAVATED MATERIALS NOT SUITABLE FOR BACKFILL AND NOT USED IN THE BACKFILL. FIELD CHECK AND VERIFY THE LOCATIONS OF ALL UNDERGROUND UTILITIES. IN THE EVENT EXISTING UTILITIES ARE DAMAGED, THEY SHALL BE REPAIRED TO MAKE THEIR OPERATION EQUAL TO BEFORE ANY TRENCHING WAS STARTED. REPLACE CONCRETE, CURBS, PAVING AND OTHER SURFACE IMPROVEMENTS CUT DURING EXCAVATION TO THEIR ORIGINAL CONDITION. IN A LIME STABILIZED AREA, THE LIME STABILIZATION SHALL BE FULLY RESTORED AFTER THE EXCAVATION IS COMPLETE.

SYMBOL LEGEND

- DISTRIBUTION PANELBOARD, SURFACE MOUNTED
- BRANCH PANELBOARD, SURFACE MOUNTED
- BRANCH PANELBOARD, FLUSH MOUNTED
- T — DRY-TYPE TRANSFORMER
- A — 2x4 FIXTURE, LETTER INDICATES TYPE
- A — 2x4 FIXTURE ON AN UNSWITCHED CIRCUIT, LETTER INDICATES TYPE
- A — 2x2 FIXTURE, LETTER INDICATES TYPE
- A — 2x2 FIXTURE ON AN UNSWITCHED CIRCUIT, LETTER INDICATES TYPE
- A — WALL MOUNTED FIXTURE, LETTER INDICATES TYPE
- A — WALL MOUNTED FIXTURE ON AN UNSWITCHED CIRCUIT, LETTER INDICATES TYPE
- A — 4' STRIP FIXTURE, LETTER INDICATES TYPE
- A — 4' STRIP FIXTURE ON AN UNSWITCHED CIRCUIT, LETTER INDICATES TYPE
- A — 8' STRIP FIXTURE, LETTER INDICATES TYPE
- A — 8' STRIP FIXTURE ON AN UNSWITCHED CIRCUIT, LETTER INDICATES TYPE
- A — LOW-BAY OR HIGH-BAY LIGHT FIXTURE, LETTER INDICATES TYPE
- A — RECESSED DOWNLIGHT, LETTER INDICATES TYPE
- A — RECESSED WALLWASH FIXTURE, LETTER INDICATES TYPE
- A — WALL MOUNTED LIGHT FIXTURE, LETTER INDICATES TYPE
- A — CEILING FAN, LETTER INDICATES TYPE
- A — PENDANT LIGHT FIXTURE, LETTER INDICATES TYPE
- A — CHANDALIER LIGHT FIXTURE, LETTER INDICATES TYPE
- A — EXIT LIGHT FIXTURE WITH INTEGRAL BATTERY PACK, ARROWS INDICATE DIRECTION, LETTER INDICATES TYPE
- A — COMBINATINON EXIT/EMERGENCY LIGHT FIXTURE WITH BATTERY PACK, LETTER INDICATES TYPE
- A — EMERGENCY LIGHT FIXTURE WITH BATTERY PACK, LETTER INDICATES TYPE
- EQUIPMENT CONNECTION
- NON-FUSED DISCONNECT, SIZE AMPERAGE AND NUMBER OF POLES IN ACCORDANCE WITH THE CIRCUIT OVERCURRENT PROTECTIVE DEVICE
- FUSED DISCONNECT, SIZE AMPERAGE AND NUMBER OF POLES IN ACCORDANCE WITH THE CIRCUIT OVERCURRENT PROTECTIVE DEVICE
- COMBINATION STARTER/DISCONNECT, SIZE AMPERAGE AND NUMBER OF POLES IN ACCORDANCE WITH THE CIRCUIT OVERCURRENT PROTECTIVE DEVICE
- (M) — CEILING MOUNTED OCCUPANCY SENSOR
- $ — SINGLE POLE SWITCH, MOUNTED 45" ABOVE FINISHED FLOOR TO THE CENTER OF DEVICE, SUBSCRIPTS INDICATE THE FOLLOWING:
  - 3 - 3-WAY SWITCH
  - 4 - 4-WAY SWITCH
  - K - KEYED SWITCH
  - 3K - 3-WAY KEYED SWITCH
  - 4K - 4-WAY KEYED SWITCH
  - D - DIMMER
  - 3D - 3-WAY DIMMER
  - F - FAN RATED
  - M - OCCUPANCY SENSOR
  - R - MOTOR RATED SWITCH
  - Y - MOMENTARY SWITCH
  - WP- WEATHER-PROOF
- DUPLEX RECEPTACLE, MOUNTED 18" ABOVE FINISHED FLOOR TO THE CENTER OF DEVICE, SUBSCRIPTS INDICATE THE FOLLOWING:
  - * - MOUNTED 6" ABOVE COUNTER TO THE CENTER OF DEVICE
  - G - GROUND FAULT INTERRUPTER TYPE
  - IG - ISOLATED GROUND
  - T - TAMPER-PROOF
  - U - USB
  - WP- WEATHER-PROOF
- QUADPLEX RECEPTACLE, MOUNTED 18" ABOVE FINISHED FLOOR TO THE CENTER OF DEVICE, SUBSCRIPTS INDICATE THE FOLLOWING:
  - * - MOUNTED 6" ABOVE COUNTER TO THE CENTER OF DEVICE
  - G - GROUND FAULT INTERRUPTER TYPE
  - IG - ISOLATED GROUND
  - T - TAMPER-PROOF
  - U - USB
  - WP- WEATHER-PROOF GROUND FAULT INTERRUPTER TYPE
- TELEPHONE/DATA OUTLET, MOUNTED 18" ABOVE FINISHED FLOOR TO THE CENTER OF DEVICE WITH 3/4" CONDUIT STUBBED OUT TO ABOVE ACCESSIBLE CEILING
- * TELEPHONE/DATA OUTLET, MOUNTED 6" ABOVE TOP OF COUNTER TO THE CENTER OF DEVICE WITH 3/4" CONDUIT STUBBED OUT TO ABOVE ACCESSIBLE CEILING
- CABLE TV OUTLET, MOUNTED 18" ABOVE FINISHED FLOOR TO THE CENTER OF DEVICE WITH 3/4" CONDUIT STUBBED OUT TO ABOVE ACCESSIBLE CEILING
- * CABLE TV OUTLET, MOUNTED 6" ABOVE TOP OF COUNTER TO THE CENTER OF DEVICE WITH 3/4" CONDUIT STUBBED OUT TO ABOVE ACCESSIBLE CEILING
- FLOOR MOUNTED RECEPTACLE WITH BRASS COVER PLATE
- FLOOR MOUNTED TELEPHONE OUTLET WITH BRASS COVER PLATE & 3/4" CONDUIT STUBBED OUT TO ABOVE ACCESSIBLE CEILING
- FLOOR MOUNTED DATA OUTLET WITH BRASS COVER PLATE & 3/4" CONDUIT STUBBED OUT TO ABOVE ACCESSIBLE CEILING
- FLOOR MOUNTED CABLE TV OUTLET WITH BRASS COVER PLATE & 3/4" CONDUIT STUBBED OUT TO ABOVE ACCESSIBLE CEILING
- (T) — THERMOSTAT OUTLET BOX, MOUNTED 46" ABOVE FINISHED FLOOR TO THE CENTER OF DEVICE WITH 1/2" CONDUIT STUBBED OUT TO ABOVE ACCESSIBLE CEILING
- HOMERUN TO PANELBOARD - ARROW(S) INDICATE NUMBER OF CIRCUITS. SUBSCRIPT DENOTES PANELBOARD AND CIRCUIT NUMBER(S)

Architects Design Group

Architects and Planners

I.S.K. Reeves V, F.A.I.A.
Ian A. Reeves, A.I.A.
Susan Gantt A.I.A., LEED-AP

333 N. Knowles Ave.
Winter Park, Florida 32789
(407) 647-1706

Corporate Registration
Number: BR1177

STATE OF TEXAS
LEE K. PHILLIPS
83368
REGISTERED PROFESSIONAL ENGINEER

6/11/20

FIRE STATION NO.5

CITY OF LONGVIEW

CONSTRUCTION SET

REVISIONS/ADDENDA

Number	Description	Date Issued

MOODY & PHILLIPS
ELECTRIC CO, INC.
ENGINEERING * CONSTRUCTION
1205 S. Bennett Ave.
Tyler, Texas 75701
(903) 597-5001
www.moody-phillips.com
Texas Registration # F-553

SHEET TITLE:

NOTES AND LEGEND

scale: N/A
drawn: CDP
checked: LKP
approved: LKP
date: JUNE 05, 2020

PROJECT NUMBER:

1006

SHEET NUMBER:

E-100

6/10/2020 4:02:00 PM

TX Firm Registration #F-000553

© 2020 - Moody & Phillips Electric Co.

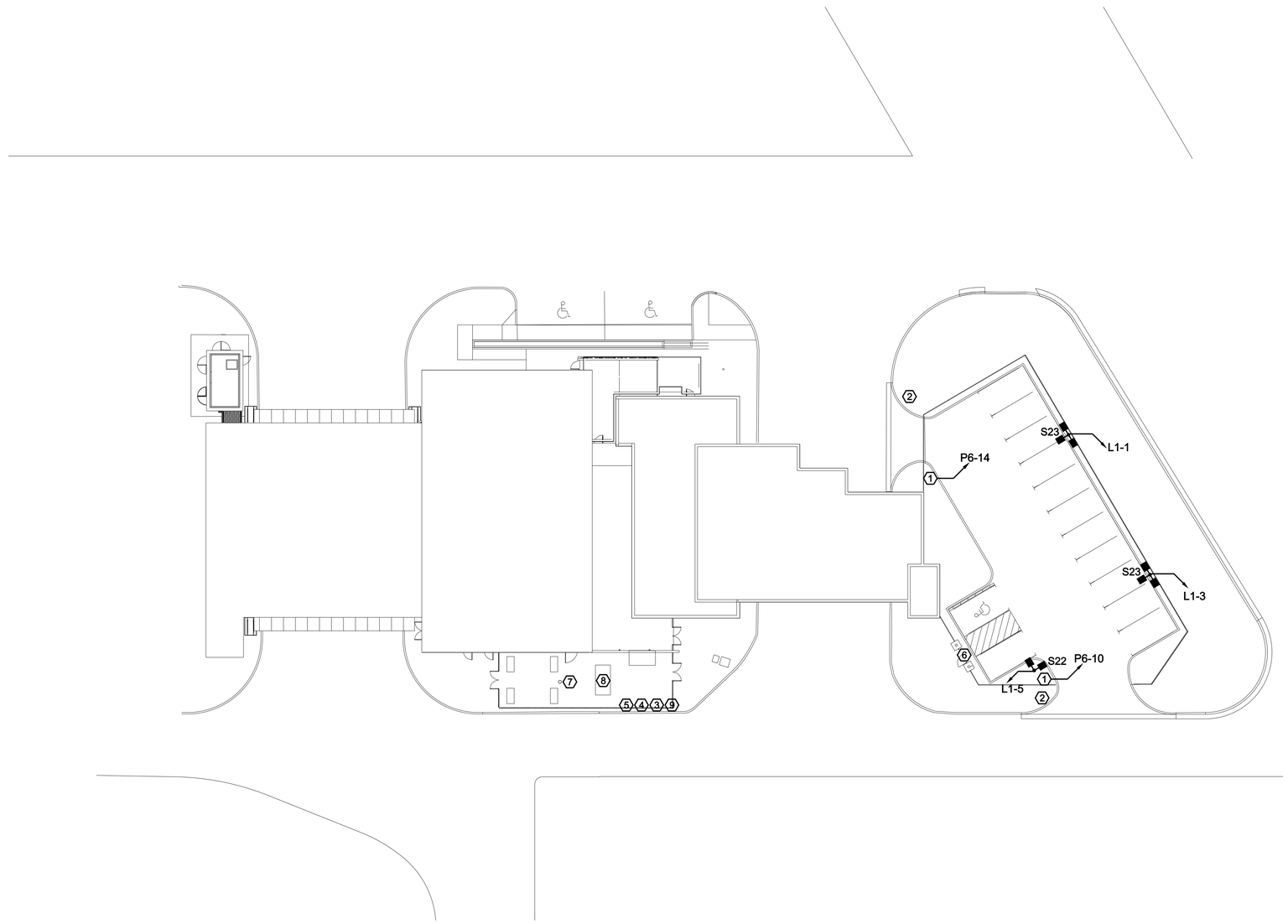

GENERAL NOTES

1. INSTALL MARKING TAPE 6" (BRADY IDENTOLINE OR EQUAL) ABOVE ALL CONDUIT INSTALLED BELOW GRADE.
2. BACKFILL SHALL BE PLACED IN UNIFORM LAYERS NOT TO EXCEED 12" LOOSE DEPTH AND SHALL BE COMPACTED A MINIMUM OF 95% OF STANDARD MAXIMUM DENSITY.
3. DO NOT CUT EXISTING PAVEMENT, SIDEWALKS OR CURBS. DO NOT DITCH OR EXCAVATE WITHIN 5FT OF THE DRIPLINE OF EXISTING TREES. BORE AS REQUIRED TO AVOID THESE OBSTACLES.
4. TERMINATE ALL CONDUIT WITH A GLUED ON PVC CAP UNLESS NOTED OTHERWISE.
5. SERVE LIGHT FIXTURES WITH 1" C, 3 - #10.
6. REFER TO CIVIL DRAWINGS FOR EXACT LOCATIONS OF ALL EQUIPMENT MOUNTED OUTSIDE OF THE BUILDING (LIGHT POLES, GENERATOR, GATE OPERATORS, ETC.).

PLAN NOTES

PRIOR TO INSTALLATION VERIFY THE EXACT LOCATION AND CONNECTION REQUIREMENTS FOR ALL EQUIPMENT DESIGNATED BY PLAN NOTES.

1. POWERED GATE. EXTEND A 1" CONDUIT FOR POWER BACK TO PANEL. EXTEND A 1 1/4" CONDUIT TO LOCATION SHOWN BY PLAN NOTE "16" ON SHEET E-301 FOR DATA. PROVIDE ADDITIONAL CONTROL CONDUIT AS REQUIRED BY GATE MANUFACTURER FOR A COMPLETE INSTALLATION.
2. KEYPAD. EXTEND A 1" CONDUIT FOR POWER BACK TO PANEL. EXTEND A 1 1/4" CONDUIT TO LOCATION SHOWN BY PLAN NOTE "16" ON SHEET E-301 FOR DATA.
3. SWEPCO POLE WITH TRANSFORMERS. MOUNT METER PEDESTAL ADJACENT TO POLE.
4. CONNECTION TO CABLE UTILITY. PROVIDE (2) 4" CONDUITS FROM THIS LOCATION TO LOCATION SHOWN BY PLAN NOTE "16" ON SHEET E-301.
5. CONNECTION TO TELEPHONE UTILITY. PROVIDE (2) 4" CONDUITS FROM THIS LOCATION TO LOCATION SHOWN BY PLAN NOTE "16" ON SHEET E-301.
6. GATE OPERATOR. EXTEND A 1" CONDUIT FOR POWER BACK TO PANEL "P6". EXTEND A 1 1/4" CONDUIT TO LOCATION SHOWN BY PLAN NOTE "16" ON SHEET E-301 FOR DATA.
7. EXISTING SIREN POLE. REMOVE EXISTING SERVICE AND PROVIDE NEW FEEDER FROM PANEL "MDP" WITH 1 1/2" C, 3 - #2, 1 - #6. EXTEND A (2) 1" CONDUITS TO LOCATION SHOWN BY PLAN NOTE "16" ON SHEET E-301 FOR DATA.
8. GENERATOR.
9. INSTALL A 2FT WIDE x 3FT LONG x 2FT DEEP CONCRETE JUNCTION BOX WITH STEEL COVER, QUAZITE #PG243624-CA. EXTEND A (2) 3" CONDUITS TO LOCATION SHOWN BY PLAN NOTE "16" ON SHEET E-301 FOR DATA.

Architects Design Group

Architects and Planners

I.S.K. Reeves V, F.A.I.A.
Ian A. Reeves, A.I.A.
Susan Gantt A.I.A., LEED-AP

333 N. Knowles Ave.
Winter Park, Florida 32789
(407) 647-1706

Corporate Registration
Number: BR1177

STATE OF TEXAS
LEE K. PHILLIPS
83368
REGISTERED PROFESSIONAL ENGINEER

6/11/20

FIRE STATION NO.5

CITY OF LONGVIEW

CONSTRUCTION SET

REVISIONS/ADDENDA

Number	Description	Date Issued

MOODY & PHILLIPS
ELECTRIC CO, INC.
ENGINEERING * CONSTRUCTION

1205 S. Bennett Ave.
Tyler, Texas 75701
(903) 597-5001
www.moody-phillips.com
Texas Registration # F-553

SHEET TITLE:

ELECTRICAL
SITE PLAN

scale: 1" = 20'-0"
drawn: CDP
checked: LKP
approved: LKP
date: JUNE 05, 2020
PROJECT NUMBER:

1006

SHEET NUMBER:

E-101

6/10/2020 4:02:20 PM

TX Firm Registration #F-000553

© 2020 - Moody & Phillips Electric Co.

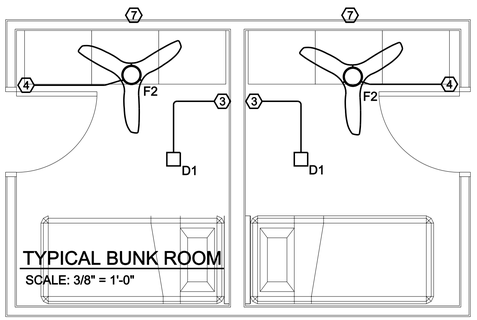

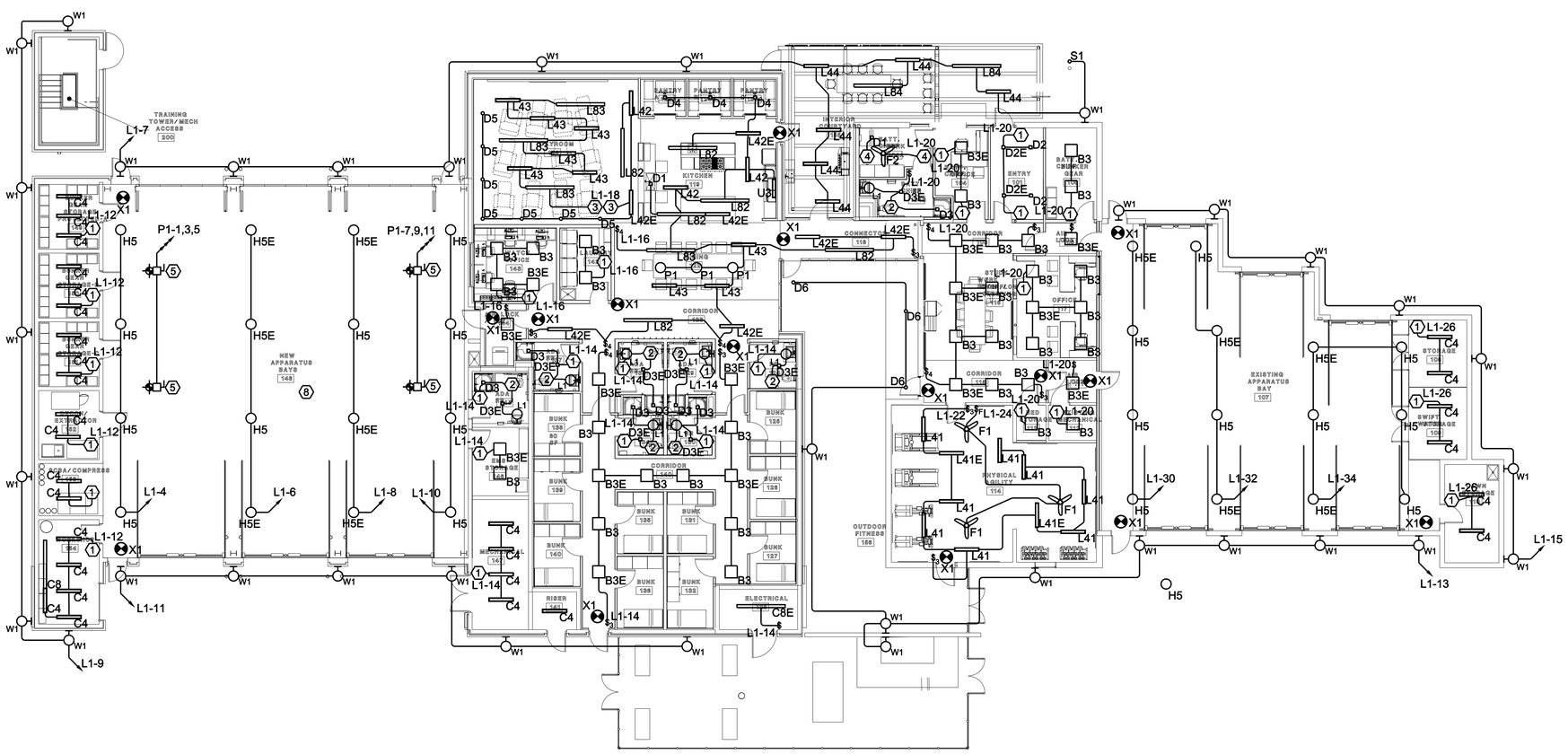

GENERAL NOTES

1. REFER TO ARCHITECTURAL PLANS TO DETERMINE AREAS OF DEMOLITION. REMOVE ALL EXISTING ELECTRICAL EQUIPMENT IN AREAS OF DEMOLITION. REMOVE ALL EXISTING BRANCH CIRCUIT CONDUIT AND CONDUCTORS THAT PREVIOUSLY SERVED LIGHT FIXTURES, RECEPTACLES AND EQUIPMENT REMOVED DURING DEMOLITION. ALL CONDUIT AND CONDUCTORS SHALL BE REMOVED BACK TO THE PANELBOARD THAT THEY ARE SERVED FROM.
2. REFER TO REFLECTED CEILING PLAN ON ARCHITECTURAL DRAWINGS FOR EXACT LOCATIONS OF CEILING MOUNTED INTERIOR LIGHT FIXTURES. REFER TO ELEVATIONS ON ARCHITECTURAL DRAWINGS FOR EXACT LOCATIONS OF INTERIOR AND EXTERIOR WALL MOUNTED LIGHT FIXTURES.
3. ALL LIGHTING CONTROL DEVICES AND PROGRAMMING SHALL COMPLY WITH 2015 IECC.
4. INTERCONNECT ALL CEILING MOUNTED MOTION SENSORS, ROOM CONTROLLERS AND LOW VOLTAGE WALL SWITCHES LOCATED IN A ROOM OR CORRIDOR SO THAT THEY FORM AN INTEGRATED LIGHTING CONTROL SYSTEM FOR ROOM OR CORRIDOR.
5. FOR RESTROOMS, LOBBIES, STAIRWAYS AND CORRIDORS CEILING SENSORS SHALL OPERATE AS AUTOMATIC 100% ON AND AS A VACANCY OFF AFTER DETECTING NO OCCUPANTS FOR 30 MINUTES. FOR ALL OTHER SPACES, CEILING SENSORS SHALL OPERATE AS AUTOMATIC 50% ON AND VACANCY OFF AFTER DETECTING NO OCCUPANTS FOR 30 MINUTES. ALL SPACES WITH CEILING SENSORS SHALL HAVE A MANUAL SWITCH(ES) TO DIM THE LIGHTS UP/DOWN AND TO ALLOW OCCUPANTS TO TURN THE LIGHTS ON/OFF.
6. CONNECT LIGHT FIXTURE TYPES "X1", "Z1" AND THOSE WITH AN "E" SUFFIX TO CIRCUIT L1-42 UNLESS SHOWN OTHERWISE.

PLAN NOTES

PRIOR TO INSTALLATION VERIFY THE EXACT LOCATION AND CONNECTION REQUIREMENTS FOR ALL EQUIPMENT DESIGNATED BY PLAN NOTES.

1. WALL MOUNTED MOTION SENSOR WITH INTEGRAL 0-10V DIMMING (WATTSTOPPER #PW-311). VERIFY THAT IT IS COMPATIBLE WITH 0-10V LED DRIVERS IN LIGHT FIXTURES TO BE CONTROLLED BY INTEGRAL DIMMER. PROGRAM SENSOR SO THAT IT IS MANUAL ON AND VACANCY OFF AFTER DETECTING NO OCCUPANTS FOR 30 MINUTES. IF MORE THAN ONE WATTSTOPPER DEVICE #PW-311 IS INSTALLED IN A ROOM, CONNECT THEM TOGETHER AS SHOWN IN THE "MULTI-WAY" WIRING SCHEMATIC IN THE INSTALLATION MANUAL SO THAT ALL WATTSTOPPER #PW-311 DEVICES WILL BE ABLE TO CONTROL ALL LIGHT FIXTURES LOCATED IN THE ROOM.
2. EXHAUST FAN.
3. 0-10V DIMMER (PASS & SEYMOUR #CD4FB3LP).
4. PROVIDE A FAN RATED SWITCH FOR CEILING FAN AND A SINGLE POLE SWITCH FOR THE FAN LIGHT KIT.
5. HVLS FAN.
6. CONNECT TYPE "M1" LIGHT FIXTURES TO CIRCUIT L1-2.
7. CONNECT LIGHT FIXTURES AND CEILING FAN TO THE SAME CIRCUIT SERVING RECEPTACLES LOCATED IN ROOM.
8. MOUNT TYPE "H5" FIXTURES 16'-0" TO BOTTOM OF FIXTURE ABOVE FINISHED FLOOR.

Architects Design Group

Architects and Planners

I.S.K. Reeves V, F.A.I.A.
Ian A. Reeves, A.I.A.
Susan Gantt A.I.A., LEED-AP

333 N. Knowles Ave.
Winter Park, Florida 32789
(407) 647-1706

Corporate Registration
Number: BR1177

STATE OF TEXAS
LEE K. PHILLIPS
83368
REGISTERED PROFESSIONAL ENGINEER

6/11/20

FIRE STATION NO.5

CITY OF LONGVIEW

CONSTRUCTION SET

REVISIONS/ADDENDA

Number	Description	Date Issued

MOODY & PHILLIPS
ELECTRIC CO, INC.
est. 1947
ENGINEERING * CONSTRUCTION
1205 S. Bennett Ave.
Tyler, Texas 75701
(903) 597-5001
www.moody-phillips.com
Texas Registration # F-553

SHEET TITLE:

LIGHTING PLAN

scale: 3/32" = 1'-0"
drawn: CDP
checked: LKP
approved: LKP
date: JUNE 05, 2020

PROJECT NUMBER:

1006

SHEET NUMBER:

E-201

6/11/2020 10:38:20 AM

TX Firm Registration #F-000553

© 2020 - Moody & Phillips Electric Co.

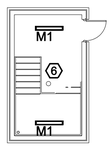

TRAINING TOWER
1 1ST FLOOR
SCALE: 3/32" = 1'-0"

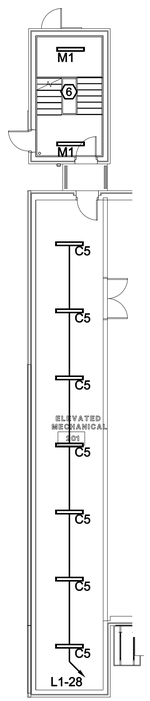

TRAINING TOWER 2ND FLOOR
2 AND MECHANICAL MEZZANINE
SCALE: 3/32" = 1'-0"

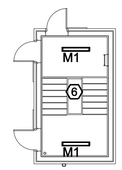

TRAINING TOWER
3 3RD FLOOR
SCALE: 3/32" = 1'-0"

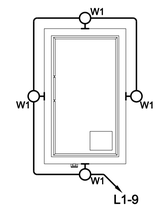

TRAINING TOWER
4 ROOF
SCALE: 3/32" = 1'-0"

GENERAL NOTES

1. REFER TO ARCHITECTURAL PLANS TO DETERMINE AREAS OF DEMOLITION. REMOVE ALL EXISTING ELECTRICAL EQUIPMENT IN AREAS OF DEMOLITION. REMOVE ALL EXISTING BRANCH CIRCUIT CONDUIT AND CONDUCTORS THAT PREVIOUSLY SERVED LIGHT FIXTURES, RECEPTACLES AND EQUIPMENT REMOVED DURING DEMOLITION. ALL CONDUIT AND CONDUCTORS SHALL BE REMOVED BACK TO THE PANELBOARD THAT THEY ARE SERVED FROM.
2. REFER TO REFLECTED CEILING PLAN ON ARCHITECTURAL DRAWINGS FOR EXACT LOCATIONS OF CEILING MOUNTED INTERIOR LIGHT FIXTURES. REFER TO ELEVATIONS ON ARCHITECTURAL DRAWINGS FOR EXACT LOCATIONS OF INTERIOR AND EXTERIOR WALL MOUNTED LIGHT FIXTURES.
3. ALL LIGHTING CONTROL DEVICES AND PROGRAMMING SHALL COMPLY WITH 2015 IECC.
4. INTERCONNECT ALL CEILING MOUNTED MOTION SENSORS, ROOM CONTROLLERS AND LOW VOLTAGE WALL SWITCHES LOCATED IN A ROOM OR CORRIDOR SO THAT THEY FORM AN INTEGRATED LIGHTING CONTROL SYSTEM FOR ROOM OR CORRIDOR.
5. FOR RESTROOMS, LOBBIES, STAIRWAYS AND CORRIDORS CEILING SENSORS SHALL OPERATE AS AUTOMATIC 100% ON AND AS A VACANCY OFF AFTER DETECTING NO OCCUPANTS FOR 30 MINUTES. FOR ALL OTHER SPACES, CEILING SENSORS SHALL OPERATE AS AUTOMATIC 50% ON AND VACANCY OFF AFTER DETECTING NO OCCUPANTS FOR 30 MINUTES. ALL SPACES WITH CEILING SENSORS SHALL HAVE A MANUAL SWITCH(ES) TO DIM THE LIGHTS UP/DOWN AND TO ALLOW OCCUPANTS TO TURN THE LIGHTS ON/OFF.
6. CONNECT LIGHT FIXTURE TYPES "X1", "Z1" AND THOSE WITH AN "E" SUFFIX TO CIRCUIT L1-42 UNLESS SHOWN OTHERWISE.

PLAN NOTES

PRIOR TO INSTALLATION VERIFY THE EXACT LOCATION AND CONNECTION REQUIREMENTS FOR ALL EQUIPMENT DESIGNATED BY PLAN NOTES.

1. WALL MOUNTED MOTION SENSOR WITH INTEGRAL 0-10V DIMMING (WATTSTOPPER #PW-311). VERIFY THAT IT IS COMPATIBLE WITH 0-10V LED DRIVERS IN LIGHT FIXTURES TO BE CONTROLLED BY INTEGRAL DIMMER. PROGRAM SENSOR SO THAT IT IS MANUAL ON AND VACANCY OFF AFTER DETECTING NO OCCUPANTS FOR 30 MINUTES. IF MORE THAN ONE WATTSTOPPER DEVICE #PW-311 IS INSTALLED IN A ROOM, CONNECT THEM TOGETHER AS SHOWN IN THE "MULTI-WAY" WIRING SCHEMATIC IN THE INSTALLATION MANUAL SO THAT ALL WATTSTOPPER #PW-311 DEVICES WILL BE ABLE TO CONTROL ALL LIGHT FIXTURES LOCATED IN THE ROOM.
2. EXHAUST FAN.
3. 0-10V DIMMER (PASS & SEYMOUR #CD4FB3LP).
4. PROVIDE A FAN RATED SWITCH FOR CEILING FAN AND A SINGLE POLE SWITCH FOR THE FAN LIGHT KIT.
5. HVLS FAN.
6. CONNECT TYPE "M1" LIGHT FIXTURES TO CIRCUIT L1-2.
7. CONNECT LIGHT FIXTURES AND CEILING FAN TO THE SAME CIRCUIT SERVING RECEPTACLES LOCATED IN ROOM.
8. MOUNT TYPE "H5" FIXTURES 16'-0" TO BOTTOM OF FIXTURE ABOVE FINISHED FLOOR.

Architects Design Group

Architects and Planners

I.S.K. Reeves V, F.A.I.A.
Ian A. Reeves, A.I.A.
Susan Gantt A.I.A., LEED-AP

333 N. Knowles Ave.
Winter Park, Florida 32789
(407) 647-1706

Corporate Registration
Number: BR1177

STATE OF TEXAS
LEE K. PHILLIPS
83368
REGISTERED PROFESSIONAL ENGINEER

6/11/20

FIRE STATION NO.5

CITY OF LONGVIEW

CONSTRUCTION SET

REVISIONS/ADDENDA

Number	Description	Date Issued

MOODY & PHILLIPS ELECTRIC CO, INC.
ENGINEERING * CONSTRUCTION
1205 S. Bennett Ave.
Tyler, Texas 75701
(903) 597-5001
www.moody-phillips.com
Texas Registration # F-553

SHEET TITLE:

LIGHTING PLAN

scale: 3/32" = 1'-0"
drawn: CDP
checked: LKP
approved: LKP
date: JUNE 05, 2020
PROJECT NUMBER:
1006
SHEET NUMBER:
E-202

6/10/2020 4:02:41 PM

TX Firm Registration #F-000553

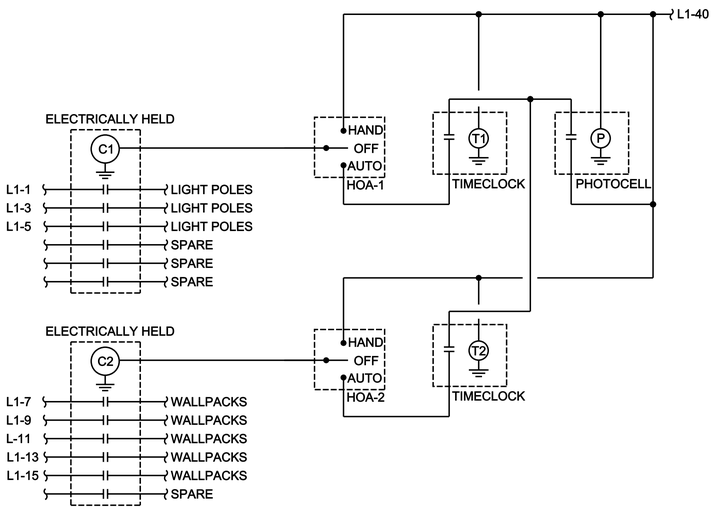

CONTROL SCHEMATIC NOTES

1. MOUNT CONTACTORS, TIMECLOCKS AND HOA SWITCHES INSIDE LIGHTING CONTROL SECTION OF SWITGHGEAR "IFS-2".
2. CONTACTORS SHALL BE EATON #C30CN SERIES. LOAD CONTACTS SHALL BE RATED FOR 480V,30A. A 2-WIRE CONTROL MODULE SHALL BE PROVIDED FOR ELECTRICALLY HELD CONTACTORS. A 3-WIRE CONTROL MODULE SHALL BE PROVIDED FOR MECHANICALLY HELD CONTACTORS.
3. TIMECLOCK SHALL BE A TORK #DWZ100B.
4. PHOTOCELL SHALL BE A TORK #2001.
5. HAND-OFF-AUTOMATIC SWITCH (HOA) SHALL BE AN EATON #E22 SERIES.

LIGHTING CONTROL NOTES

1. ALL LIGHTING CONTROL DEVICES AND PROGRAMMING SHALL COMPLY WITH 2015 IECC.
2. TIMECLOCK "T1" CONTROLLING THE SIGN SHALL BE PROGRAMMED TO TURN OFF SIGN AS A FUNCTION OF AVAILABLE DAYLIGHT VIA THE PHOTOCELL. THE OWNER MAY HAVE ADDITIONAL REQUIREMENTS DURING NIGHT TIME THAT THE SIGN WILL BE TURNED OFF. VERIFY REQUIREMENTS WITH OWNER'S REPRESENTATIVE AND PROGRAM THE TIMECLOCK AS DIRECTED BY OWNER'S REPRESENTATIVE.
3. TIMECLOCK "T2" CONTROLLING THE EXTERIOR LIGHTS SHALL BE PROGRAMMED TO TURN OFF LIGHTS AS A FUNCTION OF AVAILABLE DAYLIGHT VIA THE PHOTOCELL. THE OWNER MAY HAVE ADDITIONAL REQUIREMENTS DURING NIGHT TIME THAT THE LIGHTS WILL BE TURNED OFF. VERIFY REQUIREMENTS WITH OWNER'S REPRESENTATIVE AND PROGRAM THE TIMECLOCK AS DIRECTED BY OWNER'S REPRESENTATIVE.

1 LIGHTING CONTROL SCHEMATIC
NOT TO SCALE

LIGHTING FIXTURE SCHEDULE

TYPE	DESCRIPTION	MOUNTING	VOLTAGE	OUTPUT	MANUFACTURER & "SERIES"	NOTES
A1	2' x 4' LED TROFFER, EDGE LIT FLAT PANEL, MATTE WHITE LENS, 0-10V DIMMING, INTEGRAL OCCUPANCY AND DAYLIGHT SENSOR, DAMP LOCATION RATED	RECESSED	120/277V	5000K 6,400 LUMENS	METALUX "24FPX"	
B3	2' X 2' LED TROFFER WITH CENTER PRISMATIC LENS, 0-10V DIMMING	RECESSED	120/277V	3500K 4,400 LUMENS	METALUX "22RLN"	
C4	4FT LED STRIP, ROUND FULL FROST LENS, WIDE DISTRIBUTION, 0-10V DIMMING	SURFACE	120/277V	5000K 4,200 LUMENS	METALUX "SNLED"	
C5	4FT LED STRIP, ROUND FULL FROST LENS, WIDE DISTRIBUTION, 0-10V DIMMING, INTEGRAL OCCUPANCY SENSOR	SURFACE	120/277V	5000K 4,200 LUMENS	METALUX "SNLED"	
C8	8FT LED STRIP, ROUND FULL FROST LENS, WIDE DISTRIBUTION, 0-10V DIMMING	SURFACE	120/277V	5000K 8,400 LUMENS	METALUX "SNLED"	
D1	6" SQUARE LED DOWNLIGHT WITH BAR HANGERS, SPECULAR CLEAR ALZAK REFLECTOR, 45 DEGREE BEAM ANGLE, SELF FLANGED, 0-10V DIMMING TO 1%	RECESSED	120/277V	3000K 3,000 LUMENS	PORTFOLIO "LDSQ6B"	
D2	6" SQUARE LED DOWNLIGHT WITH BAR HANGERS, SPECULAR CLEAR ALZAK REFLECTOR, 45 DEGREE BEAM ANGLE, SELF FLANGED, 0-10V DIMMING TO 1%	RECESSED	120/277V	3500K 1,500 LUMENS	PORTFOLIO "LDSQ6B"	
D3	6" SQUARE LED DOWNLIGHT WITH BAR HANGERS, SPECULAR CLEAR ALZAK REFLECTOR, 45 DEGREE BEAM ANGLE, SELF FLANGED, 0-10V DIMMING TO 1%, GASKET KIT FOR IP66 RATING	RECESSED	120/277V	3000K 3,000 LUMENS	PORTFOLIO "LDSQ6B"	
D4	6" SQUARE LED DOWNLIGHT WITH BAR HANGERS, SPECULAR CLEAR ALZAK REFLECTOR, 45 DEGREE BEAM ANGLE, SELF FLANGED, 0-10V DIMMING TO 1%	RECESSED	120/277V	3500K 5,000 LUMENS	PORTFOLIO "LDSQ6B"	
D5	6" ROUND LED DOWNLIGHT WITH BAR HANGERS, SPECULAR CLEAR ALZAK REFLECTOR, 45 DEGREE BEAM ANGLE, SELF FLANGED, 0-10V DIMMING TO 1%	RECESSED	120/277V	3500K 1,500 LUMENS	PORTFOLIO "LD6B"	
D6	6" ROUND LED DOWNLIGHT WITH BAR HANGERS, SPECULAR CLEAR ALZAK REFLECTOR, 45 DEGREE BEAM ANGLE, SELF FLANGED, 0-10V DIMMING TO 1%, GASKET KIT FOR IP66 RATING	RECESSED	120/277V	4000K 3,000 LUMENS	PORTFOLIO "LD6B"	
F1	56" 3 BLADE FAN, BRUSHED NICKEL FINISH WITH MATCHING BLADES	SURFACE	120/277V	NA	MODERN FAN "IC3-BN-56-NK-NL"	
F2	56" 3 BLADE FAN, BRUSHED NICKEL FINISH WITH MATCHING BLADES, LIGHT KIT	SURFACE	120/277V	3000K 1,800 LUMENS	MODERN FAN "IC3-BN-56-NK-570"	
H5	HIGH BAY, MEDIUM DISTRIBUTION, CLEAR ACRYLIC LENS, 0-10V DIMMING, HOOK MOUNT, FROSTED REFLECTOR, INTEGRAL OCCUPANCY AND DAYLIGHT SENSOR, IP66 RATING, WHITE FINISH	PENDANT	120/277V	5000K 32,000 LUMENS	METALUX "BMK"	
L1	LED VANITY LIGHT, SATIN NICKEL FINISH, ACRYLIC DIFFUSER	SURFACE	120V	3000K 2,400 LUMENS	DECO LIGHTING "LEDVAN001-18"	
L41	4FT, 4 INCH LINEAR FIXTURE, DIRECT/INDIRECT OPTICS, AIRCRAFT CABLE SUSPENDED, 0-10V DIMMING, COLOR TO BE SELECTED BY OWNER'S REPRESENTATIVE	SUSPENDED	120/277V	3500K 2,300 LUMENS	NEO-RAY "S124DIP"	
L42	4FT, 2 INCH LINEAR FIXTURE, DIRECT/INDIRECT OPTICS, AIRCRAFT CABLE SUSPENDED, 0-10V DIMMING, COLOR TO BE SELECTED BY OWNER'S REPRESENTATIVE	SUSPENDED	120/277V	3500K 1,900 LUMENS	NEO-RAY "S122DIP"	
L43	4FT, 2 INCH LINEAR RECESSED FIXTURE, SATIN FLUSH DIFFUSER, 0-10V DIMMING, COLOR TO BE SELECTED BY OWNER'S REPRESENTATIVE	RECESSED	120/277V	3500K 2,700 LUMENS	NEO-RAY "S122DR"	
L44	4FT, 2 INCH LINEAR RECESSED FIXTURE, SATIN FLUSH DIFFUSER, 0-10V DIMMING, COLOR TO BE SELECTED BY OWNER'S REPRESENTATIVE, DAMP LOCATION RATED	RECESSED	120/277V	4000K 2,700 LUMENS	NEO-RAY "S122DR"	
L82	8FT, 2 INCH LINEAR FIXTURE, DIRECT/INDIRECT OPTICS, AIRCRAFT CABLE SUSPENDED, 0-10V DIMMING, COLOR TO BE SELECTED BY OWNER'S REPRESENTATIVE	SUSPENDED	120/277V	3500K 3,800 LUMENS	NEO-RAY "S122DIP"	
L83	8FT, 2 INCH LINEAR RECESSED FIXTURE, SATIN FLUSH DIFFUSER, 0-10V DIMMING, COLOR TO BE SELECTED BY OWNER'S REPRESENTATIVE	RECESSED	120/277V	3500K 5,400 LUMENS	NEO-RAY "S122DR"	
L84	8FT, 2 INCH LINEAR RECESSED FIXTURE, SATIN FLUSH DIFFUSER, 0-10V DIMMING, COLOR TO BE SELECTED BY OWNER'S REPRESENTATIVE, DAMP LOCATION RATED	SURFACE	120/277V	4000K 5,400 LUMENS	NEO-RAY "S122DR"	
M1	VANDAL RESISTANT LED STAIR LIGHTER, INTEGRAL OCCUPANCY SENSOR	WALL	120/277V	3500K 3,600 LUMENS	FAIL-SAFE "HVSL4"	
P1	LED DECORATIVE PENDANT, BRUSHED ALUMINUM FINISH, FROSTED LENS, AIRCRAFT CABLE SUSPENSION	SUSPENDED	120/277V	3500K 8,000 LUMENS	DELRAY #IL7800-500-W30-1-D	
S1	LED ROUND INGRADE FLOODLIGHT, ADJUSTABLE OPTICS, MEDIUM FLOOD, CLEAR LENS, STAINLESS STEEL FINISH, IP68	INGRADE	120/277V	4000K 1,200 LUMENS	LUMIERE "3002A"	
S22	20FT x 5IN SQUARE STRAIGHT STEEL POLE RATED FOR 10EPA AT 80MPH WIND, (2) LED LIGHT FIXTURE, DIECAST ALUMINUM HOUSING, TYPE IV OPTICS, FIXTURE ORIENTATION AS SHOWN ON DRAWINGS, COLOR TO BE SELECTED BY OWNER'S REPRESENTATIVE	POLE	120/277V	4000K 19,000 LUMENS PER FIXTURE	FIXTURE - McGRAW-EDISON "GLEON" POLE - EATON "SSS"	
S23	20FT x 5IN SQUARE STRAIGHT STEEL POLE RATED FOR 10EPA AT 80MPH WIND, (3) LED LIGHT FIXTURE, DIECAST ALUMINUM HOUSING, TYPE IV OPTICS, FIXTURE ORIENTATION AS SHOWN ON DRAWINGS, COLOR TO BE SELECTED BY OWNER'S REPRESENTATIVE	POLE	120/277V	4000K 19,000 LUMENS PER FIXTURE	FIXTURE - McGRAW-EDISON "GLEON" POLE - EATON "SSS"	
U3	3FT LED UNDERCOUNTER LIGHT, 0-10V DIMMING	SURFACE	120/277V	3500K 2,500 LUMENS	FAIL-SAFE "UCL"	
W1	WALLPACK, LED, CUTOFF, TYPE IV OPTICS, COLOR TO BE SELECTED BY OWNER'S REPRESENTATIVE	SURFACE	120/277V	4000K 16,800 LUMEN	LUMARK "AXCL"	
X1	EXIT LIGHT, LED, DIECAST ALUMINUM HOUSING, BLACK WITH BRUSHED ALUMINUM FACE, RED LETTERING, NICKEL-CADMIUM BATTERY, SINGLE FACE	SURFACE	120/277V	LED	SURE-LITES "CX"	

GENERAL NOTES:
1. NO LIGHT FIXTURE SUBSTITUTIONS WILL BE ACCEPTED WITHOUT PRIOR APPROVAL.
2. TYPES SHOWN WITH AN "E" SUFFIX CONTAIN AN INTEGRAL OR REMOTE BATTERY BACK FOR EMERGENCY LIGHTING.
3. TYPES SHOWN WITH AN "N" SUFFIX SHALL BE NIGHT LIGHTING ON AN UNSWITCHED CIRCUIT.

Architects Design Group
Architects and Planners
I.S.K. Reeves V, F.A.I.A.
Ian A. Reeves, A.I.A.
Susan Gantt A.I.A., LEED-AP
333 N. Knowles Ave.
Winter Park, Florida 32789
(407) 647-1706
Corporate Registration Number: BR1177

STATE OF TEXAS
LEE K. PHILLIPS
83368
REGISTERED PROFESSIONAL ENGINEER
6/11/20

FIRE STATION NO.5

CITY OF LONGVIEW

CONSTRUCTION SET

REVISIONS/ADDENDA

Number	Description	Date Issued

MOODY & PHILLIPS ELECTRIC CO, INC.
ENGINEERING * CONSTRUCTION
1205 S. Bennett Ave.
Tyler, Texas 75701
(903) 597-5001
www.moody-phillips.com
Texas Registration # F-553

SHEET TITLE:
LIGHT FIXTURE SCHEDULE AND LIGHTING CONTROL SCHEMATIC

scale: N/A
drawn: CDP
checked: LKP
approved: LKP
date: JUNE 05, 2020
PROJECT NUMBER:
1006
SHEET NUMBER:
E-203

© 2020 - Moody & Phillips Electric Co.

6/11/2020 10:46:49 AM

TX Firm Registration #F-000553

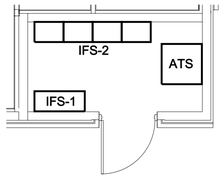

ELECTRICAL ROOM
SCALE: 3/8" = 1'-0"

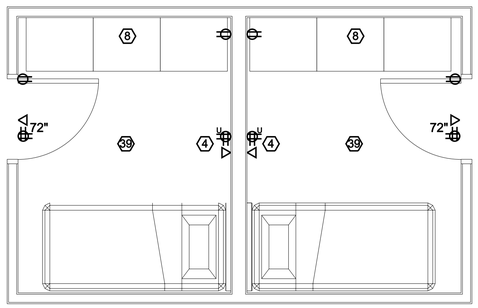

TYPICAL BUNK ROOM
SCALE: 3/8" = 1'-0"

GENERAL NOTES

1. REFER TO ARCHITECTURAL PLANS TO DETERMINE AREAS OF DEMOLITION. REMOVE ALL EXISTING ELECTRICAL EQUIPMENT IN AREAS OF DEMOLITION. REMOVE ALL EXISTING BRANCH CIRCUIT CONDUIT AND CONDUCTORS THAT PREVIOUSLY SERVED LIGHT FIXTURES, RECEPTACLES AND EQUIPMENT REMOVED DURING DEMOLITION. ALL CONDUIT AND CONDUCTORS SHALL BE REMOVED BACK TO THE PANELBOARD THAT THEY ARE SERVED FROM.

2. PROVIDE A STRONG VERSABOX #SM-RBX-PRO-14-BLK AT ALL LOCATIONS OF A QUADPLEX RECEPTCLE AND DATA OUTLET MOUNTED AT 72" HIGH. MOUNT VERSABOX INSIDE WALL STUDS AND MOUNT QUADPLEX AND DATA OUTLETS TO VERSABOX.

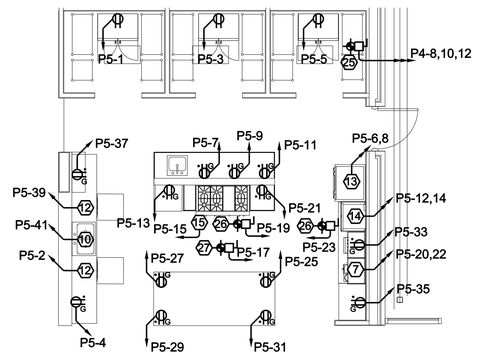

KITCHEN
SCALE: 3/8" = 1'-0"

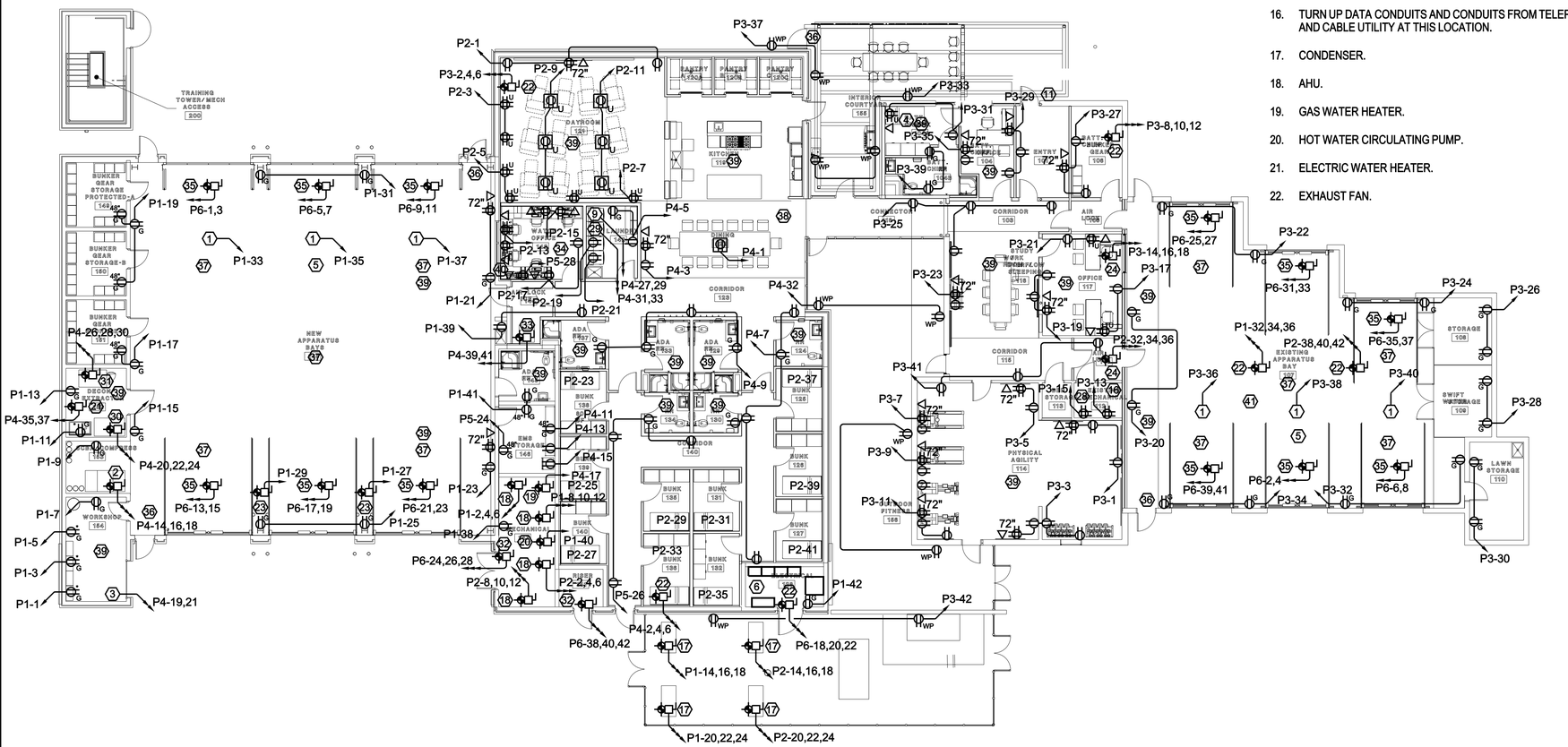

PLAN NOTES

PRIOR TO INSTALLATION VERIFY THE EXACT LOCATION AND CONNECTION REQUIREMENTS FOR ALL EQUIPMENT DESIGNATED BY PLAN NOTES.

1. NEMA 5-20R RECEPTACLE MOUNTED ON CEILING FOR SHORELINE POWER CONNECTION TO TRUCK.
2. BREATHING AIR MODULE (COMPRESSOR).
3. 50A WELDING OUTLET.
4. MOUNT RECEPTACLE AND DATA OUTLET 6" ABOVE OF SHELF ATTACHED TO BED.
5. MOUNT ALL RECEPTACLES IN THIS ROOM 48" TO CENTER OF DEVICE UNLESS NOTED OTHERWISE.
6. PROVIDE (5) CIRCUITS FOR LOW VOLTAGE EQUIPMENT (FIRE ALARM, SECURITY, ETC.). THESE CIRCUITS SHALL BE P4-34,36,38,40,42. EXACT LOCATION OF EQUIPMENT WILL BE DETERMINED DURING CONSTRUCTION.
7. COFFEE MAKER. PROVIDE A 208v/20A CIRCUIT SERVED BY A 20A/2P GFI CIRCUIT BREAKER.
8. CONNECT ALL RECEPTACLES IN ROOM TO CIRCUIT NUMBER SHOWN ON COMPLETE FLOOR PLAN BELOW.
9. 30A DRYER RECEPTACLE. CONNECT ASSOCIATED DRYER EXHAUST FAN DEF-1 TO CIRCUIT P4-23.
10. DISPOSAL. MOUNT A SWITCH TO THE SIDE OF SINK ABOVE COUNTER TO SERVE DISPOSAL.
11. RECESSED RING DOWN TELEPHONE. PROVIDE OUTLET BOX AS REQUIRED. VERIFY HEIGHT WITH OWNER'S REPRESENTATIVE.
12. DISHWASHER.
13. OVEN.
14. TWO MICROWAVES MOUNTED IN MILLWORK. PROVIDE A DEDICATED CIRCUIT FOR EACH MICROWAVE.
15. RANGE.
16. TURN UP DATA CONDUITS AND CONDUITS FROM TELEPHONE AND CABLE UTILITY AT THIS LOCATION.
17. CONDENSER.
18. AHU.
19. GAS WATER HEATER.
20. HOT WATER CIRCULATING PUMP.
21. ELECTRIC WATER HEATER.
22. EXHAUST FAN.
23. RADIANT HEATER.
24. ROOF TOP UNIT.
25. MAKE UP AIR UNIT.
26. KITCHEN HOOD.
27. HOOD CONTROL CABINET.
28. PROVIDE (5) CIRCUITS FOR LOW VOLTAGE EQUIPMENT (FIRE ALARM, SECURITY, ETC.). THESE CIRCUITS SHALL BE P5-34,36,38,40,42. EXACT LOCATION OF EQUIPMENT WILL BE DETERMINED DURING CONSTRUCTION.
29. 30A DRYER RECEPTACLE. CONNECT ASSOCIATED DRYER EXHAUST FAN DEF-2 TO CIRCUIT P4-25.
30. GEAR DRYING CABINET.
31. EXTRACTOR / WASHER.
32. UNIT HEATER.
33. ICE MAKER.
34. IDF CABINET. MOUNT (2) QUADPLEX RECEPTACLES AT BOTTOM OF CABINET. CONNECT EACH RECEPTACLE TO A DEDICATED CIRCUIT (P5-16 & P5-18). INSTALL (4) 2" CONDUITS FROM IDF CABINET TO LOCATION SHOWN BY PLAN NOTE "16" IN ROOM 112.
35. OVERHEAD DOOR OPERATOR.
36. PROVIDE A JUNCTION BOX ABOVE NEAREST ACCESSIBLE CEILING FOR DOOR ACCESS CONTROL. SERVE JUNCTION BOX WITH CIRCUIT P6-12. EXTEND 3/4" CONDUIT FROM JUNCTION BOX TO DOOR FRAME.
37. DATA OUTLET MOUNTED ON CEILING. EXTEND 3/4" CONDUIT FROM DATA OUTLET TO ABOVE ACCESSIBLE CEILING.
38. EXTEND (3) 2" CONDUITS FROM ACCESSIBLE CEILING IN NEW SECTION OF BUILDING TO ACCESSIBLE CEILING IN EXISTING SECTION OF BUILDING.
39. EXTEND A 1" CONDUIT FROM THIS LOCATION TO ABOVE ACCESSIBLE CEILING IN ROOM 143 FOR SPEAKER WIRING.
40. SURFACE MOUNT A 12"x12"x12" NEMA-12 JUNCTION BOX ON PARAPET WALL. EXTEND A 2" CONDUIT DOWN THROUGH WALL TO ABOVE ACCESSIBLE CEILING IN ROOM 143. DO NOT PENETRATE ROOF WITH CONDUIT - CONNECT CONDUIT TO JUNCTION BOX THROUGH THE PARAPET WALL.
41. CONNECT EXISTING GAS-FIRED UNIT HEATERS TO CIRCUITS P5-30 AND P5-32.

Architects Design Group

Architects and Planners

I.S.K. Reeves V, F.A.I.A.
Ian A. Reeves, A.I.A.
Susan Gantt A.I.A., LEED-AP

333 N. Knowles Ave.
Winter Park, Florida 32789
(407) 647-1706

Corporate Registration
Number: BR1177

STATE OF TEXAS
LEE K. PHILLIPS
83368
REGISTERED PROFESSIONAL ENGINEER
6/11/20

FIRE STATION NO.5

CITY OF LONGVIEW

CONSTRUCTION SET

REVISIONS/ADDENDA

Number	Description	Date Issued

est. 1947

MOODY & PHILLIPS ELECTRIC CO, INC.
ENGINEERING * CONSTRUCTION
1205 S. Bennett Ave.
Tyler, Texas 75701
(903) 597-5001
www.moody-phillips.com
Texas Registration # F-553

SHEET TITLE:

POWER PLAN

scale: 3/32" = 1'-0"
drawn: CDP
checked: LKP
approved: LKP
date: JUNE 05, 2020
PROJECT NUMBER:
1006
SHEET NUMBER:
E-301

© 2020 - Moody & Phillips Electric Co.

6/11/2020 11:17:33 AM

TX Firm Registration #F-000553

© 2020 - Moody & Phillips Electric Co.

GENERAL NOTES

1. REFER TO ARCHITECTURAL PLANS TO DETERMINE AREAS OF DEMOLITION. REMOVE ALL EXISTING ELECTRICAL EQUIPMENT IN AREAS OF DEMOLITION. REMOVE ALL EXISTING BRANCH CIRCUIT CONDUIT AND CONDUCTORS THAT PREVIOUSLY SERVED LIGHT FIXTURES, RECEPTACLES AND EQUIPMENT REMOVED DURING DEMOLITION. ALL CONDUIT AND CONDUCTORS SHALL BE REMOVED BACK TO THE PANELBOARD THAT THEY ARE SERVED FROM.

2. PROVIDE A STRONG VERSABOX #SM-RBX-PRO-14-BLK AT ALL LOCATIONS OF A QUADPLEX RECEPTCLE AND DATA OUTLET MOUNTED AT 72" HIGH. MOUNT VERSABOX INSIDE WALL STUDS AND MOUNT QUADPLEX AND DATA OUTLETS TO VERSABOX.

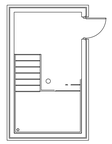

TRAINING TOWER 1ST FLOOR
1 SCALE: 3/32" = 1'-0"

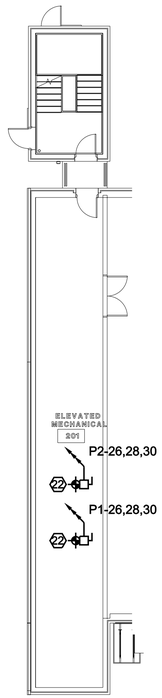

TRAINING TOWER 2ND FLOOR AND MECHANICAL MEZZANINE
2 SCALE: 3/32" = 1'-0"

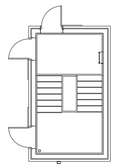

TRAINING TOWER 3RD FLOOR
3 SCALE: 3/32" = 1'-0"

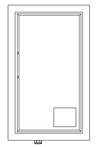

TRAINING TOWER ROOF
4 SCALE: 3/32" = 1'-0"

PLAN NOTES

PRIOR TO INSTALLATION VERIFY THE EXACT LOCATION AND CONNECTION REQUIREMENTS FOR ALL EQUIPMENT DESIGNATED BY PLAN NOTES.

1. NEMA 5-20R RECEPTACLE MOUNTED ON CEILING FOR SHORELINE POWER CONNECTION TO TRUCK.
2. BREATHING AIR MODULE (COMPRESSOR).
3. 50A WELDING OUTLET.
4. MOUNT RECEPTACLE AND DATA OUTLET 6" ABOVE OF SHELF ATTACHED TO BED.
5. MOUNT ALL RECEPTACLES IN THIS ROOM 48" TO CENTER OF DEVICE UNLESS NOTED OTHERWISE.
6. PROVIDE (5) CIRCUITS FOR LOW VOLTAGE EQUIPMENT (FIRE ALARM, SECURITY, ETC.). THESE CIRCUITS SHALL BE P4-34,36,38,40,42. EXACT LOCATION OF EQUIPMENT WILL BE DETERMINED DURING CONSTRUCTION.
7. COFFEE MAKER. PROVIDE A 208v/20A CIRCUIT SERVED BY A 20A/2P GFI CIRCUIT BREAKER.
8. CONNECT ALL RECEPTACLES IN ROOM TO CIRCUIT NUMBER SHOWN ON COMPLETE FLOOR PLAN BELOW.
9. 30A DRYER RECEPTACLE. CONNECT ASSOCIATED DRYER EXHAUST FAN DEF-1 TO CIRCUIT P4-23.
10. DISPOSAL. MOUNT A SWITCH TO THE SIDE OF SINK ABOVE COUNTER TO SERVE DISPOSAL.
11. RECESSED RING DOWN TELEPHONE. PROVIDE OUTLET BOX AS REQUIRED. VERIFY HEIGHT WITH OWNER'S REPRESENTATIVE.
12. DISHWASHER.
13. OVEN.
14. TWO MICROWAVES MOUNTED IN MILLWORK. PROVIDE A DEDICATED CIRCUIT FOR EACH MICROWAVE.
15. RANGE.
16. TURN UP DATA CONDUITS AND CONDUITS FROM TELEPHONE AND CABLE UTILITY AT THIS LOCATION.
17. CONDENSER.
18. AHU.
19. GAS WATER HEATER.
20. HOT WATER CIRCULATING PUMP.
21. ELECTRIC WATER HEATER.
22. EXHAUST FAN.
23. RADIANT HEATER.
24. ROOF TOP UNIT.
25. MAKE UP AIR UNIT.
26. KITCHEN HOOD.
27. HOOD CONTROL CABINET.
28. PROVIDE (5) CIRCUITS FOR LOW VOLTAGE EQUIPMENT (FIRE ALARM, SECURITY, ETC.). THESE CIRCUITS SHALL BE P5-34,36,38,40,42. EXACT LOCATION OF EQUIPMENT WILL BE DETERMINED DURING CONSTRUCTION.
29. 30A DRYER RECEPTACLE. CONNECT ASSOCIATED DRYER EXHAUST FAN DEF-2 TO CIRCUIT P4-25.
30. GEAR DRYING CABINET.
31. EXTRACTOR / WASHER.
32. UNIT HEATER.
33. ICE MAKER.
34. IDF CABINET. MOUNT (2) QUADPLEX RECEPTACLES AT BOTTOM OF CABINET. CONNECT EACH RECEPTACLE TO A DEDICATED CIRCUIT (P5-16 & P5-18). INSTALL (4) 2" CONDUITS FROM IDF CABINET TO LOCATION SHOWN BY PLAN NOTE "16" IN ROOM 112.
35. OVERHEAD DOOR OPERATOR.
36. PROVIDE A JUNCTION BOX ABOVE NEAREST ACCESSIBLE CEILING FOR DOOR ACCESS CONTROL. SERVE JUNCTION BOX WITH CIRCUIT P6-12. EXTEND 3/4" CONDUIT FROM JUNCTION BOX TO DOOR FRAME.
37. DATA OUTLET MOUNTED ON CEILING. EXTEND 3/4" CONDUIT FROM DATA OUTLET TO ABOVE ACCESSIBLE CEILING.
38. EXTEND (3) 2" CONDUITS FROM ACCESSIBLE CEILING IN NEW SECTION OF BUILDING TO ACCESSIBLE CEILING IN EXISTING SECTION OF BUILDING.
39. EXTEND A 1" CONDUIT FROM THIS LOCATION TO ABOVE ACCESSIBLE CEILING IN ROOM 143 FOR SPEAKER WIRING.
40. SURFACE MOUNT A 12"x12"x12" NEMA-12 JUNCTION BOX ON PARAPET WALL. EXTEND A 2" CONDUIT DOWN THROUGH WALL TO ABOVE ACCESSIBLE CEILING IN ROOM 143. DO NOT PENETRATE ROOF WITH CONDUIT - CONNECT CONDUIT TO JUNCTION BOX THROUGH THE PARAPET WALL.
41. CONNECT EXISTING GAS-FIRED UNIT HEATERS TO CIRCUITS P5-30 AND P5-32.

Architects Design Group

Architects and Planners

I.S.K. Reeves V, F.A.I.A.
Ian A. Reeves, A.I.A.
Susan Gantt A.I.A., LEED-AP

333 N. Knowles Ave.
Winter Park, Florida 32789
(407) 647-1706

Corporate Registration Number: BR1177

STATE OF TEXAS
LEE K. PHILLIPS
83368
REGISTERED PROFESSIONAL ENGINEER

6/11/20

FIRE STATION NO.5

CITY OF LONGVIEW

CONSTRUCTION SET

REVISIONS/ADDENDA

Number	Description	Date issued

MOODY & PHILLIPS ELECTRIC CO, INC.
ENGINEERING * CONSTRUCTION
1205 S. Bennett Ave.
Tyler, Texas 75701
(903) 597-5001
www.moody-phillips.com
Texas Registration # F-553

SHEET TITLE:

POWER PLAN

scale: 3/32" = 1'-0"
drawn: CDP
checked: LKP
approved: LKP
date: JUNE 05, 2020
PROJECT NUMBER:
1006
SHEET NUMBER:
E-302

6/11/2020 11:17:37 AM

TX Firm Registration #F-000553

© 2020 - Moody & Phillips Electric Co.

6/10/2020 4:02:04 PM

PLAN NOTES

PRIOR TO INSTALLATION VERIFY THE EXACT LOCATION AND CONNECTION REQUIREMENTS FOR ALL EQUIPMENT DESIGNATED BY PLAN NOTES.

1. PROVIDE (3) SPARE 1" CONDUIT BETWEEN THE GENERATOR AND AUTOMATIC TRANSFER SWITCH.
2. PROVIDE A BLANK CELL WITH BACKPLATE AND HINGED DOOR. INSTALL LIGHTING CONTACTORS, TIMECLOCKS AND HOA SWITCHES IN CELL.

DISTRIBUTION PANEL MDP

208/120 VOLT, 3 PHASE, 4 WIRE
600 AMP, MCB
35 KAIC
NEMA-1, SURFACE

NOTES:

CKT BKR #	CKT BKR AMP	CKT BKR P	LOAD KVA	LOAD DESCRIPTION	NOTE
1	225	3	16.8	PANEL L1	
2	225	3	29.7	PANEL P1	
3	225	3	43.4	PANEL P2	
4	225	3	30.2	PANEL P3	
5	225	3	51.0	PANEL P4	
6	225	3	19.9	PANEL P5	
7	225	3	18.0	PANEL P6	
8	100	2	5.0	SIREN	
9	100	3		SPARE	
10	225	3		SPARE	
11	225	3		SPACE	
12	225	3		SPACE	
13					
14					
15					
16					
17					
18					
19					
20					

LOAD TYPE	CONNECTED KVA NON	CONNECTED KVA CONT	DEMAND KVA
LIGHTING	-	16.8	21.0
RECEPTACLES	61.5	-	35.8
MOTORS	88.3	11.9	105.3
KITCHEN	12.7	-	8.3
OTHER	14.5	8.4	25.0
SPECIAL	-	-	-

LOAD SUMMARY	
TOTAL CONNECTED KVA	214.1
DEMAND KVA	195.3
DEMAND AMPS	542.5

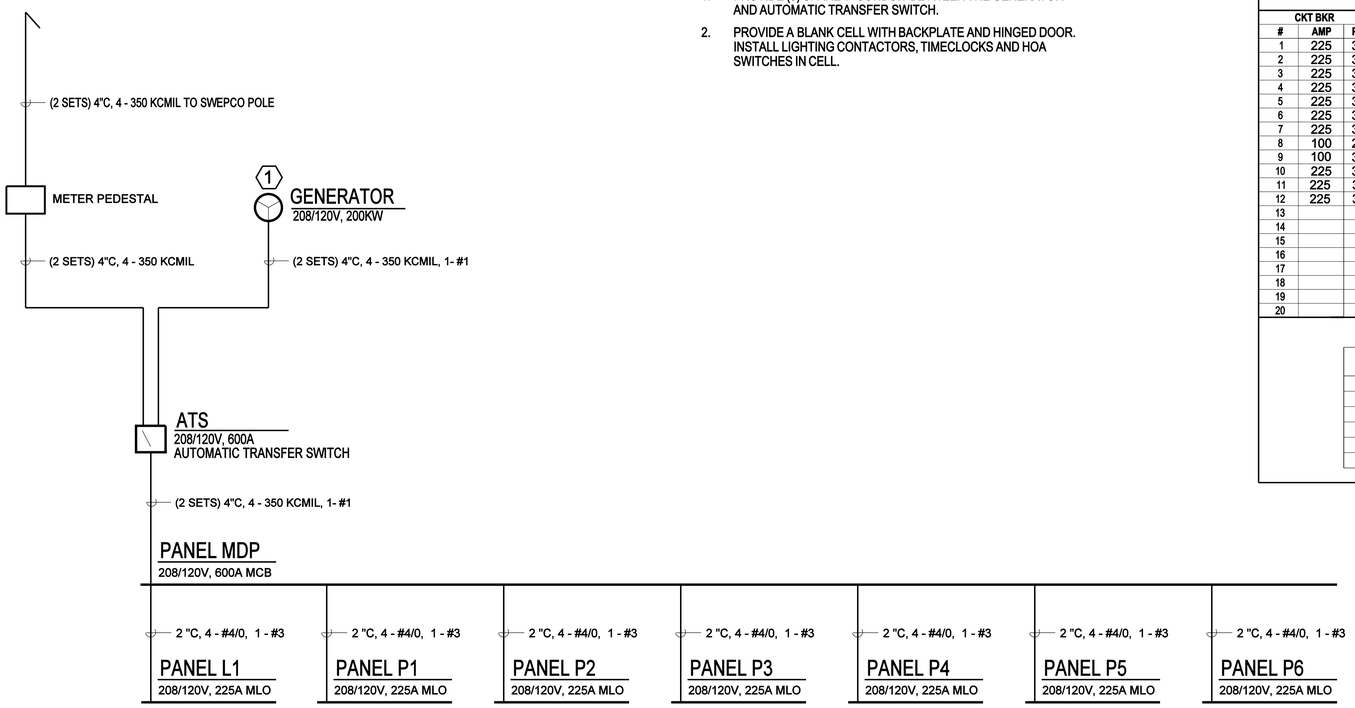

ONE-LINE DIAGRAM
NOT TO SCALE

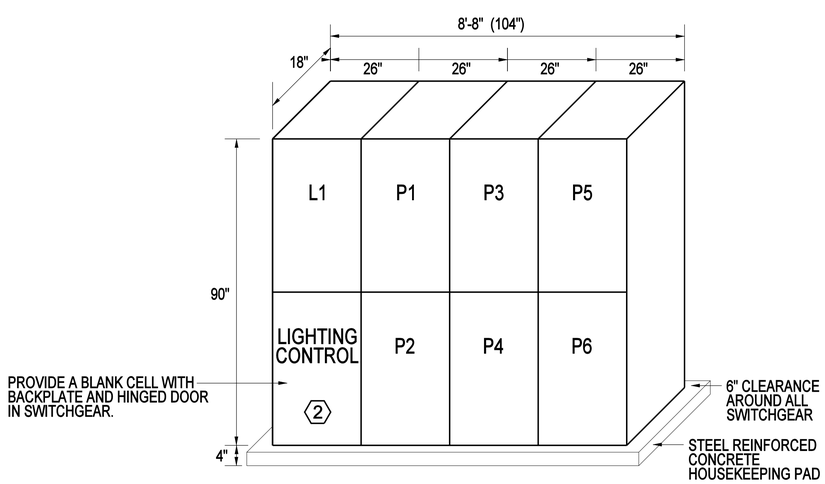

SWITCHGEAR IFS-2
NOT TO SCALE

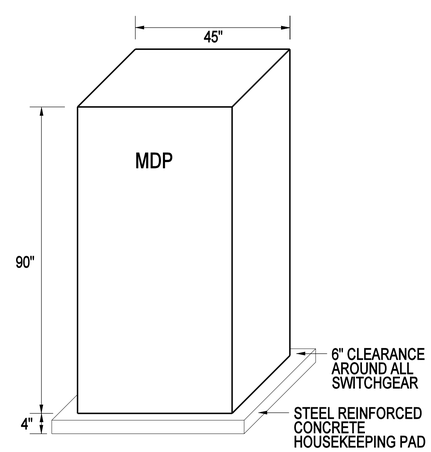

SWITCHGEAR IFS-1
NOT TO SCALE

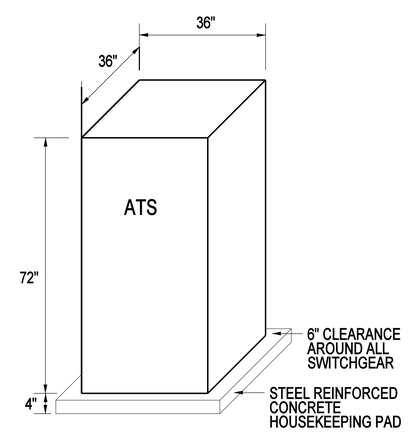

AUTOMATIC TRANSFER SWITCH
NOT TO SCALE

Architects Design Group

Architects and Planners
I.S.K. Reeves V, F.A.I.A.
Ian A. Reeves, A.I.A.
Susan Gantt A.I.A., LEED-AP

333 N. Knowles Ave.
Winter Park, Florida 32789
(407) 647-1706

Corporate Registration
Number: BR1177

STATE OF TEXAS
LEE K. PHILLIPS
83368
REGISTERED PROFESSIONAL ENGINEER
6/11/20

FIRE STATION NO.5

CITY OF LONGVIEW

CONSTRUCTION SET

REVISIONS/ADDENDA

Number	Description	Date Issued

MOODY & PHILLIPS
ELECTRIC CO, INC.
ENGINEERING * CONSTRUCTION
1205 S. Bennett Ave.
Tyler, Texas 75701
(903) 597-5001
www.moody-phillips.com
Texas Registration # F-553

SHEET TITLE:

ONELINE DIAGRAM AND SWITCHGEAR ELEVATIONS

scale: N/A
drawn: CDP
checked: LKP
approved: LKP
date: JUNE 05, 2020

PROJECT NUMBER:
1006

SHEET NUMBER:
E-401

TX Firm Registration #F-000553

© 2020 - Moody & Phillips Electric Co.

PANEL L1

208/120 VOLT, 3 PHASE, 4 WIRE
225 AMP, MLO
10 KAIC
NEMA-1, SURFACE

NOTES:

NOTE	LOAD DESCRIPTION	PHASE LOAD	CKT BKR #	CKT BKR AMP	CKT BKR P	P H	CKT BKR AMP	CKT BKR P	CKT BKR #	PHASE LOAD	LOAD DESCRIPTION	NOTE
	POLE LIGHTS	1100	1	20	1	A	20	1	2	600	LIGHTING	
	POLE LIGHTS	1100	3	20	1	B	20	1	4	972	LIGHTING	
	POLE LIGHTS	730	5	20	1	C	20	1	6	972	LIGHTING	
	LIGHTING	1261	7	20	1	A	20	1	8	972	LIGHTING	
	LIGHTING	1353	9	20	1	B	20	1	10	972	LIGHTING	
	LIGHTING	861	11	20	1	C	20	1	12	654	LIGHTING	
	LIGHTING	1068	13	20	1	A	20	1	14	1157	LIGHTING	
	LIGHTING	861	15	20	1	B	20	1	16	1479	LIGHTING	
	SPARE		17	20	1	C	20	1	18	642	LIGHTING	
	SPARE		19	20	1	A	20	1	20	870	LIGHTING	
	SPARE		21	20	1	B	20	1	22	370	LIGHTING	
	SPARE		23	20	1	C	20	1	24	500	LIGHTING	
	SPARE		25	20	1	A	20	1	26	75	LIGHTING	
	SPARE		27	20	1	B	20	1	28	245	LIGHTING	
	SPARE		29	20	1	C	20	1	30	384	LIGHTING	
	SPARE		31	20	1	A	20	1	32	384	LIGHTING	
	SPARE		33	20	1	B	20	1	34	768	LIGHTING	
	SPARE		35	20	1	C	20	1	36		SPARE	
	SPARE		37	20	1	A	20	1	38		SPARE	
	SPARE		39	20	1	B	20	1	40	500	LIGHTING CONTROL	
	SPARE		41	20	1	C	20	1	42	1500	EGRESS LIGHTING	

LOAD TYPE	CONNECTED KVA NON	CONNECTED KVA CONT	DEMAND KVA
LIGHTING	-	16.8	21.0
RECEPTACLES	-	-	-
MOTORS	-	-	-
KITCHEN	-	-	-
OTHER	-	-	-
SPECIAL	-	-	-

LOAD SUMMARY	
PHASE A KVA	5.8
PHASE B KVA	7.0
PHASE C KVA	4.0
TOTAL CONNECTED KVA	16.8
DEMAND KVA	21.0
DEMAND AMPS	58.4

PANEL P1

208/120 VOLT, 3 PHASE, 4 WIRE
225 AMP, MLO
10 KAIC
NEMA-1, SURFACE

NOTES:

NOTE	LOAD DESCRIPTION	PHASE LOAD	CKT BKR #	CKT BKR AMP	CKT BKR P	P H	CKT BKR AMP	CKT BKR P	CKT BKR #	PHASE LOAD	LOAD DESCRIPTION	NOTE
	RECEPTACLE	200	1	20	1	A	20	-	2	840	AC-1	
	RECEPTACLE	200	3	20	1	B	-	-	4	840	-	
	RECEPTACLE	200	5	20	1	C	-	3	6	840	-	
	RECEPTACLE	200	7	20	1	A	20	-	8	840	AC-2	
	RECEPTACLE	200	9	20	1	B	-	-	10	840	-	
	RECEPTACLE	200	11	20	1	C	-	3	12	840	-	
	RECEPTACLE	200	13	20	1	A	30	-	14	2040	CU-1	
	RECEPTACLE	400	15	20	1	B	-	-	16	2040	-	
	RECEPTACLE	400	17	20	1	C	-	3	18	2040	-	
	RECEPTACLE	600	19	20	1	A	30	-	20	2040	CU-2	
	RECEPTACLE	600	21	20	1	B	-	-	22	2040	-	
	RECEPTACLE	600	23	20	1	C	-	3	24	2040	-	
	RECEPTACLE	400	25	20	1	A	20	-	26	828	EF-4	
	RADIANT HEATER	500	27	20	1	B	-	-	28	828	-	
	RADIANT HEATER	500	29	20	1	C	-	3	30	828	-	
	RECEPTACLE	400	31	20	1	A	20	-	32	300	EF-5	
	SHORELINE	500	33	20	1	B	-	-	34	300	-	
	SHORELINE	500	35	20	1	C	-	3	36	300	-	
	SHORELINE	500	37	20	1	A	20	1	38	200	RECEPTACLE	
	RECEPTACLE	400	39	20	1	B	20	1	40	750	CIRCULATING PUMP	
	RECEPTACLE	400	41	20	1	C	20	1	42	200	RECEPTACLE	

LOAD TYPE	CONNECTED KVA NON	CONNECTED KVA CONT	DEMAND KVA
LIGHTING	-	-	-
RECEPTACLES	7.5	-	7.5
MOTORS	17.3	5.1	25.2
KITCHEN	-	-	-
OTHER	-	-	-
SPECIAL	-	-	-

LOAD SUMMARY	
PHASE A KVA	9.6
PHASE B KVA	10.4
PHASE C KVA	9.9
TOTAL CONNECTED KVA	29.9
DEMAND KVA	32.7
DEMAND AMPS	90.8

PANEL P2

208/120 VOLT, 3 PHASE, 4 WIRE
225 AMP, MLO
10 KAIC
NEMA-1, SURFACE

NOTES:

NOTE	LOAD DESCRIPTION	PHASE LOAD	CKT BKR #	CKT BKR AMP	CKT BKR P	P H	CKT BKR AMP	CKT BKR P	CKT BKR #	PHASE LOAD	LOAD DESCRIPTION	NOTE
	RECEPTACLE	800	1	20	1	A	20	-	2	840	AC-3	
	RECEPTACLE	800	3	20	1	B	-	-	4	840	-	
	RECEPTACLE	800	5	20	1	C	-	3	6	840	-	
	RECEPTACLE	800	7	20	1	A	20	-	8	840	AC-4	
	RECEPTACLE	600	9	20	1	B	-	-	10	840	-	
	RECEPTACLE	600	11	20	1	C	-	3	12	840	-	
	RECEPTACLE	800	13	20	1	A	30	-	14	2040	CU-3	
	RECEPTACLE	800	15	20	1	B	-	-	16	2040	-	
	RECEPTACLE	600	17	20	1	C	-	3	18	2040	-	
	RECEPTACLE	200	19	20	1	A	30	-	20	2040	CU-4	
	RECEPTACLE	200	21	20	1	B	-	-	22	2040	-	
	BUNK	800	23	20	1	C	-	3	24	2040	-	
	BUNK	800	25	20	1	A	20	-	26	576	EF-3	
	BUNK	800	27	20	1	B	-	-	28	576	-	
	BUNK	800	29	20	1	C	-	3	30	576	-	
	BUNK	800	31	20	1	A	40	-	32	2832	RTU-2	
	BUNK	800	33	20	1	B	-	-	34	2832	-	
	BUNK	800	35	20	1	C	-	3	36	2832	-	
	BUNK	800	37	20	1	A	20	-	38	300	EF-6	
	BUNK	800	39	20	1	B	-	-	40	300	-	
	BUNK	800	41	20	1	C	-	3	42	300	-	

LOAD TYPE	CONNECTED KVA NON	CONNECTED KVA CONT	DEMAND KVA
LIGHTING	-	-	-
RECEPTACLES	15.0	-	12.5
MOTORS	25.8	2.6	31.2
KITCHEN	-	-	-
OTHER	-	-	-
SPECIAL	-	-	-

LOAD SUMMARY	
PHASE A KVA	14.5
PHASE B KVA	14.3
PHASE C KVA	14.7
TOTAL CONNECTED KVA	43.4
DEMAND KVA	43.7
DEMAND AMPS	121.3

PANEL P3

208/120 VOLT, 3 PHASE, 4 WIRE
225 AMP, MLO
10 KAIC
NEMA-1, SURFACE

NOTES:

NOTE	LOAD DESCRIPTION	PHASE LOAD	CKT BKR #	CKT BKR AMP	CKT BKR P	P H	CKT BKR AMP	CKT BKR P	CKT BKR #	PHASE LOAD	LOAD DESCRIPTION	NOTE
	RECEPTACLE	800	1	20	1	A	20	-	2	840	KEF-1	
	RECEPTACLE	1000	3	20	1	B	-	-	4	840	-	
	RECEPTACLE	600	5	20	1	C	-	3	6	840	-	
	RECEPTACLE	600	7	20	1	A	20	-	8	444	EF-2	
	RECEPTACLE	600	9	20	1	B	-	-	10	444	-	
	RECEPTACLE	800	11	20	1	C	-	3	12	444	-	
	RECEPTACLE	400	13	20	1	A	40	-	14	2832	RTU-1	
	RECEPTACLE	400	15	20	1	B	-	-	16	2832	-	
	RECEPTACLE	600	17	20	1	C	-	3	18	2832	-	
	RECEPTACLE	800	19	20	1	A	20	1	20	400	RECEPTACLE	
	RECEPTACLE	600	21	20	1	B	20	1	22	400	RECEPTACLE	
	RECEPTACLE	600	23	20	1	C	20	1	24	400	RECEPTACLE	
	RECEPTACLE	800	25	20	1	A	20	1	26	400	RECEPTACLE	
	RECEPTACLE	800	27	20	1	B	20	1	28	400	RECEPTACLE	
	RECEPTACLE	800	29	20	1	C	20	1	30	400	RECEPTACLE	
	RECEPTACLE	600	31	20	1	A	20	1	32	400	RECEPTACLE	
	RECEPTACLE	600	33	20	1	B	20	1	34	400	RECEPTACLE	
	RECEPTACLE	600	35	20	1	C	20	1	36	500	SHORELINE	
	RECEPTACLE	400	37	20	1	A	20	1	38	500	SHORELINE	
	RECEPTACLE	400	39	20	1	B	20	1	40	500	SHORELINE	
	RECEPTACLE	600	41	20	1	C	20	1	42	400	RECEPTACLE	

LOAD TYPE	CONNECTED KVA NON	CONNECTED KVA CONT	DEMAND KVA
LIGHTING	-	-	-
RECEPTACLES	18.5	-	14.2
MOTORS	11.0	1.3	14.8
KITCHEN	-	-	-
OTHER	-	-	-
SPECIAL	-	-	-

LOAD SUMMARY	
PHASE A KVA	10.2
PHASE B KVA	10.2
PHASE C KVA	10.4
TOTAL CONNECTED KVA	30.8
DEMAND KVA	29.1
DEMAND AMPS	80.6

Architects Design Group

Architects and Planners
I.S.K. Reeves V, F.A.I.A.
Ian A. Reeves, A.I.A.
Susan Gantt A.I.A., LEED-AP

333 N. Knowles Ave.
Winter Park, Florida 32789
(407) 647-1706

Corporate Registration
Number: BR1177

STATE OF TEXAS
LEE K. PHILLIPS
83368
REGISTERED PROFESSIONAL ENGINEER
6/11/20

FIRE STATION NO.5

CITY OF LONGVIEW

CONSTRUCTION SET

REVISIONS/ADDENDA

Number	Description	Date Issued

MOODY & PHILLIPS
ELECTRIC CO, INC.
ENGINEERING * CONSTRUCTION
1205 S. Bennett Ave.
Tyler, Texas 75701
(903) 597-5001
www.moody-phillips.com
Texas Registration # F-553

SHEET TITLE:
PANEL SCHEDULES

scale: N/A
drawn: CDP
checked: LKP
approved: LKP
date: JUNE 05, 2020
PROJECT NUMBER:
1006
SHEET NUMBER:
E-402

6/10/2020 4:02:49 PM

TX Firm Registration #F-000553

PANEL P4

208/120 VOLT, 3 PHASE, 4 WIRE
225 AMP, MLO
10 KAIC
NEMA-1, SURFACE

NOTES:

NOTE	LOAD DESCRIPTION	PHASE LOAD	CKT BKR #	CKT BKR AMP	CKT BKR P	P H	CKT BKR AMP	CKT BKR P	CKT BKR #	PHASE LOAD	LOAD DESCRIPTION	NOTE
	RECEPTACLE	200	1	20	1	A	20	-	2	936	EF-1	
	RECEPTACLE	600	3	20	1	B	-	-	4	936	-	
	RECEPTACLE	400	5	20	1	C	-	3	6	936	-	
	RECEPTACLE	1000	7	20	1	A	20	-	8	600	KMAF-1	
	RECEPTACLE	800	9	20	1	B	-	-	10	600	-	
	RECEPTACLE	200	11	20	1	C	-	3	12	600	-	
	RECEPTACLE	200	13	20	1	A	70	-	14	2500	BREATHING AIR MODULE	
	RECEPTACLE	200	15	20	1	B	-	-	16	2500	-	
	GAS WATER HEATER	500	17	20	1	C	-	3	18	2500	-	
	WELDING	1500	19	50	-	A	60	-	20	3800	DRYING CABINET	
	-	1500	21	-	2	B	-	2	22	3800	-	
	DRYER EXHAUST FAN	600	23	20	1	C	20	1	24		SPARE	
	DRYER EXHAUST FAN	600	25	20	1	A	20	-	26	840	EXTRACTOR / WASHER	
	DRYER RECEPTACLE	2250	27	30	-	B	-	-	28	840	-	
	-	2250	29	-	2	C	-	3	30	840	-	
	DRYER RECEPTACLE	2250	31	30	-	A	20	1	32	400	RECEPTACLE	
	-	2250	33	-	2	B	20	1	34		SPARE	
	ELECTRIC WATER HEATER	2250	35	30	-	C	20	3	36		SPARE	
	-	2250	37	-	2	A	40	-	38	1680	BREATHING AIR MODULE	
	ICE MAKER	832	39	20	1	B	-	-	40	1680	-	
	SPARE		41	20	1	C	-	3	42	1680	-	

LOAD TYPE	CONNECTED KVA NON	CONNECTED KVA CONT	DEMAND KVA
LIGHTING	-	-	-
RECEPTACLES	15.6	-	12.8
MOTORS	14.7	2.8	20.1
KITCHEN	-	-	-
OTHER	9.5	8.4	20.0
SPECIAL	-	-	-

LOAD SUMMARY	
PHASE A KVA	17.3
PHASE B KVA	17.8
PHASE C KVA	15.9
TOTAL CONNECTED KVA	51.0
DEMAND KVA	52.9
DEMAND AMPS	146.7

PANEL P5

208/120 VOLT, 3 PHASE, 4 WIRE
225 AMP, MLO
10 KAIC
NEMA-1, SURFACE

NOTES:

NOTE	LOAD DESCRIPTION	PHASE LOAD	CKT BKR #	CKT BKR AMP	CKT BKR P	P H	CKT BKR AMP	CKT BKR P	CKT BKR #	PHASE LOAD	LOAD DESCRIPTION	NOTE
	RECEPTACLE	200	1	20	1	A	20	1	2	1000	DISHWASHER	
	RECEPTACLE	200	3	20	1	B	20	1	4	200	RECEPTACLE	
	RECEPTACLE	200	5	20	1	C	50	-	6	3120	OVEN	
	RECEPTACLE	400	7	20	1	A	-	2	8	3120	-	
	RECEPTACLE	400	9	20	1	B	20	1	10		SPARE	
	RECEPTACLE	400	11	20	1	C	20	1	12	1200	MICROWAVE	
	RECEPTACLE	200	13	20	1	A	20	1	14	1200	MICROWAVE	
	RANGE	300	15	20	1	B	20	1	16	750	IDF RACK	
	HOOD CONTROL CABINET	500	17	20	1	C	20	1	18	750	IDF RACK	
	KITCHEN HOOD	500	19	20	1	A	20	-	20	1200	COFFEE MAKER	
	RECEPTACLE	200	21	20	1	B	-	2	22	1200	-	
	KITCHEN HOOD	500	23	20	1	C	20	1	24	400	RECEPTACLE	
	RECEPTACLE	400	25	20	1	A	20	1	26	800	RECEPTACLE	
	RECEPTACLE	400	27	20	1	B	20	1	28	400	RECEPTACLE	
	RECEPTACLE	200	29	20	1	C	20	1	30	500	UNIT HEATER	
	RECEPTACLE	200	31	20	1	A	20	1	32	500	UNIT HEATER	
	RECEPTACLE	200	33	20	1	B	20	1	34		SPARE	
	RECEPTACLE	200	35	20	1	C	20	1	36		SPARE	
	RECEPTACLE	200	37	20	1	A	20	1	38		SPARE	
	DISHWASHER	1000	39	20	1	B	20	1	40		SPARE	
	DISPOSAL	400	41	20	1	C	20	1	42		SPARE	

LOAD TYPE	CONNECTED KVA NON	CONNECTED KVA CONT	DEMAND KVA
LIGHTING	-	-	-
RECEPTACLES	5.7	-	5.7
MOTORS	1.5	-	1.6
KITCHEN	12.2	-	8.0
OTHER	-	-	-
SPECIAL	-	-	-

LOAD SUMMARY	
PHASE A KVA	8.0
PHASE B KVA	4.6
PHASE C KVA	6.9
TOTAL CONNECTED KVA	19.4
DEMAND KVA	15.3
DEMAND AMPS	42.4

PANEL P6

208/120 VOLT, 3 PHASE, 4 WIRE
225 AMP, MLO
10 KAIC
NEMA-1, SURFACE

NOTES:

NOTE	LOAD DESCRIPTION	PHASE LOAD	CKT BKR #	CKT BKR AMP	CKT BKR P	P H	CKT BKR AMP	CKT BKR P	CKT BKR #	PHASE LOAD	LOAD DESCRIPTION	NOTE
	OVERHEAD DOOR	750	1	20	-	A	20	-	2	750	OVERHEAD DOOR	
	-	750	3	-	2	B	-	2	4	750	-	
	OVERHEAD DOOR	750	5	20	-	C	20	-	6	750	OVERHEAD DOOR	
	-	750	7	-	2	A	-	2	8	750	-	
	OVERHEAD DOOR	750	9	20	-	B	20	1	10	500	GATE OPERATOR	
	-	750	11	-	2	C	20	1	12	400	DOOR ACCESS	
	OVERHEAD DOOR	750	13	20	-	A	20	1	14	500	GATE OPERATOR	
	-	750	15	-	2	B	20	1	16		SPARE	
	OVERHEAD DOOR	750	17	20	-	C	20	-	18	450	EXHAUST FAN	
	-	750	19	-	2	A	-	-	20	450	-	
	OVERHEAD DOOR	750	21	20	-	B	-	3	22	450	-	
	-	750	23	-	2	C	30	-	24	1667	UNIT HEATER	
	OVERHEAD DOOR	750	25	20	-	A	-	-	26	1667	-	
	-	750	27	-	2	B	-	3	28	1667	-	
	SPARE		29	20	1	C	20	1	30		SPARE	
	OVERHEAD DOOR	750	31	20	-	A	20	1	32		SPARE	
	-	750	33	-	2	B	20	1	34		SPARE	
	OVERHEAD DOOR	750	35	20	-	C	20	1	36		SPARE	
	-	750	37	-	2	A	30	-	38	1667	UNIT HEATER	
	OVERHEAD DOOR	750	39	20	-	B	-	-	40	1667	-	
	-	750	41	-	2	C	-	3	42	1667	-	

LOAD TYPE	CONNECTED KVA NON	CONNECTED KVA CONT	DEMAND KVA
LIGHTING	-	-	-
RECEPTACLES	-	-	-
MOTORS	18.0	-	18.4
KITCHEN	-	-	-
OTHER	-	-	-
SPECIAL	-	-	-

LOAD SUMMARY	
PHASE A KVA	6.8
PHASE B KVA	6.0
PHASE C KVA	5.2
TOTAL CONNECTED KVA	18.0
DEMAND KVA	18.4
DEMAND AMPS	51.0

Architects Design Group

Architects and Planners
I.S.K. Reeves V, F.A.I.A.
Ian A. Reeves, A.I.A.
Susan Gantt A.I.A., LEED-AP

333 N. Knowles Ave.
Winter Park, Florida 32789
(407) 647-1706

Corporate Registration
Number: BR1177

STATE OF TEXAS
LEE K. PHILLIPS
83368
REGISTERED PROFESSIONAL ENGINEER
6/11/20

FIRE STATION NO.5

CITY OF LONGVIEW

CONSTRUCTION SET

REVISIONS/ADDENDA

Number	Description	Date Issued

MOODY & PHILLIPS ELECTRIC CO, INC.
ENGINEERING * CONSTRUCTION
1205 S. Bennett Ave.
Tyler, Texas 75701
(903) 597-5001
www.moody-phillips.com
Texas Registration # F-553

SHEET TITLE:
PANEL SCHEDULES

scale: N/A
drawn: CDP
checked: LKP
approved: LKP
date: JUNE 05, 2020
PROJECT NUMBER:
1006
SHEET NUMBER:
E-403

© 2020 - Moody & Phillips Electric Co.

6/11/2020 11:37:07 AM

TX Firm Registration #F-000553

© 2020 - Moody & Phillips Electric Co.

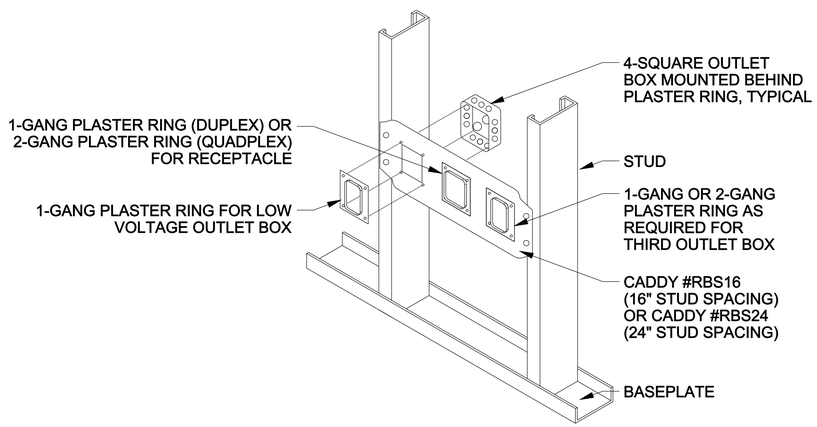

NOTES

1. USE MOUNTING BRACKET AS SHOWN FOR ALL INSTANCES OF RECPTACLES AND LOW VOLTAGE OUTLET BOXES MOUNTED ADJACENT TO ONE ANOTHER.
2. REFER TO LEGEND OR FLOOR PLANS FOR MOUNTING HEIGHT OF BOXES.
3. LOW VOLTAGE OUTLET BOXES ARE DATA, TELEPHONE, OR CABLE TV OUTLETS.
4. THE THIRD OUTLET IS NOT ALWAYS REQUIRED.

1 RECEPTACLE AND LOW VOLTAGE OUTLET BOX MOUNTING IN GYPSUM BOARD WALLS

NOT TO SCALE

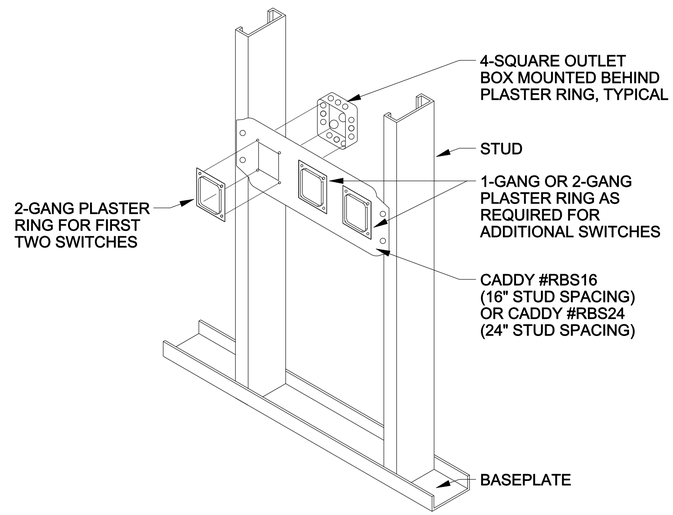

NOTES

1. USE MOUNTING BRACKET AS SHOWN FOR ALL INSTANCES OF TWO OR MORE SWITCHES ADJACENT TO ONE ANOTHER.
2. REFER TO LEGEND OR FLOOR PLANS FOR MOUNTING HEIGHT OF BOXES.

2 MULTIPLE SWITCH OUTLET BOX MOUNTING IN GYPSUM BOARD WALLS

NOT TO SCALE

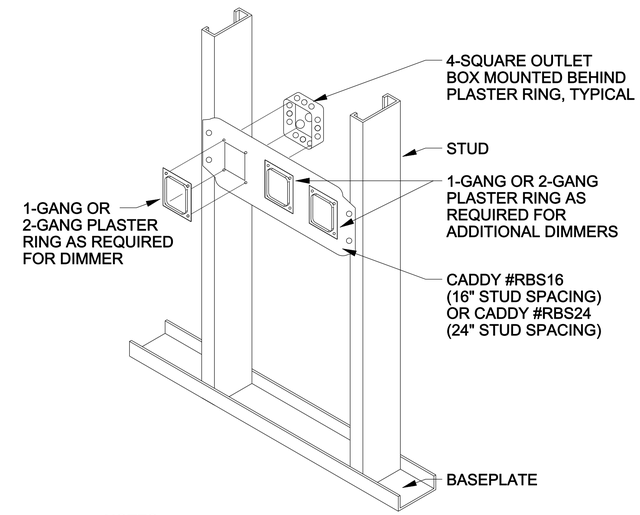

NOTES

1. USE MOUNTING BRACKET AS SHOWN FOR ALL INSTANCES OF TWO OR MORE SWITCHES ADJACENT TO ONE ANOTHER.
2. REFER TO LEGEND OR FLOOR PLANS FOR MOUNTING HEIGHT OF BOXES.
3. DO NOT MOUNT MORE THAN ONE DIMMER IN A SINGLE PLASTER RING.
4. INSTALL ADDITIONAL CADDY #RBS SERIES BRACKETS BELOW FIRST BRACKET AS REQUIRED WHEN THERE ARE FOUR OR MORE DIMMERS TO BE INSTALLED AT ONE LOCATION.

3 DIMMER SWITCH OUTLET BOX MOUNTING IN GYPSUM BOARD WALLS

NOT TO SCALE

Architects Design Group

Architects and Planners

I.S.K. Reeves V, F.A.I.A.
Ian A. Reeves, A.I.A.
Susan Gantt A.I.A., LEED-AP

333 N. Knowles Ave.
Winter Park, Florida 32789
(407) 647-1706

Corporate Registration Number: BR1177

STATE OF TEXAS
LEE K. PHILLIPS
83368
REGISTERED PROFESSIONAL ENGINEER

6/11/20

FIRE STATION NO.5

CITY OF LONGVIEW

CONSTRUCTION SET

REVISIONS/ADDENDA

Number	Description	Date Issued

MOODY & PHILLIPS ELECTRIC CO, INC.
ENGINEERING * CONSTRUCTION
1205 S. Bennett Ave.
Tyler, Texas 75701
(903) 597-5001
www.moody-phillips.com
Texas Registration # F-553

SHEET TITLE:

DETAILS

scale: N/A
drawn: CDP
checked: LKP
approved: LKP
date: JUNE 05, 2020
PROJECT NUMBER:

1006

SHEET NUMBER:

E-501

6/10/2020 4:02:33 PM

TX Firm Registration #F-000553

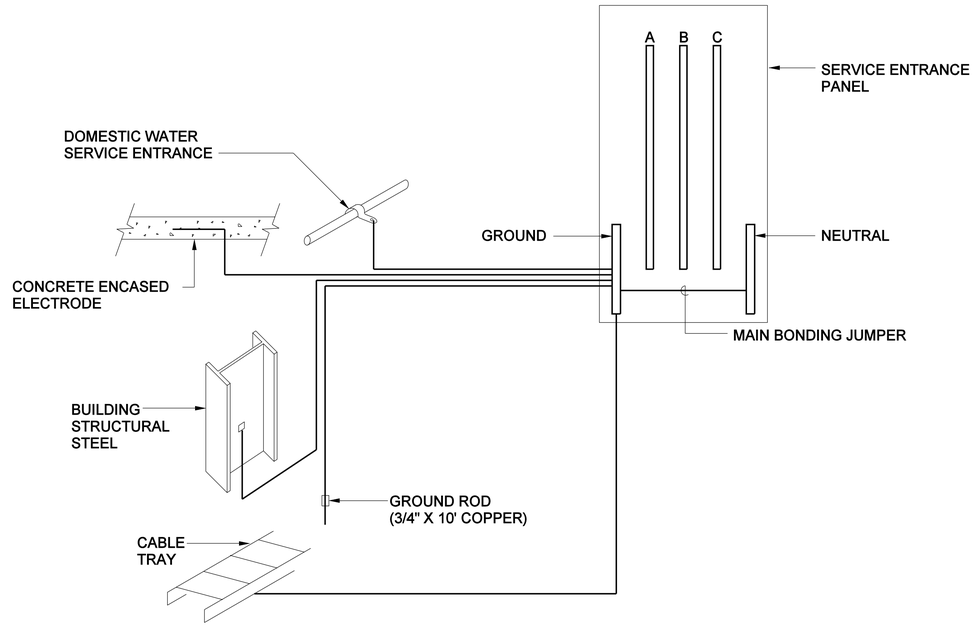

1 SERVICE ENTRANCE GROUNDING DIAGRAM
NOT TO SCALE

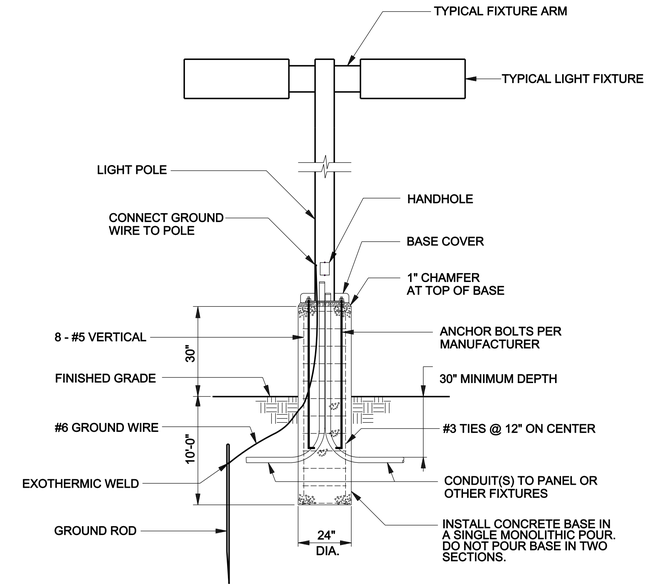

2 POLE BASE DETAIL
NOT TO SCALE

Architects Design Group

Architects and Planners
I.S.K. Reeves V, F.A.I.A.
Ian A. Reeves, A.I.A.
Susan Gantt A.I.A., LEED-AP

333 N. Knowles Ave.
Winter Park, Florida 32789
(407) 647-1706

Corporate Registration Number: BR1177

STATE OF TEXAS
LEE K. PHILLIPS
83368
REGISTERED PROFESSIONAL ENGINEER
6/11/20

FIRE STATION NO.5

CITY OF LONGVIEW

CONSTRUCTION SET

REVISIONS/ADDENDA

Number	Description	Date Issued

MOODY & PHILLIPS ELECTRIC CO, INC.
ENGINEERING * CONSTRUCTION
1205 S. Bennett Ave.
Tyler, Texas 75701
(903) 597-5001
www.moody-phillips.com
Texas Registration # F-553

SHEET TITLE:
DETAILS

scale: N/A
drawn: CDP
checked: LKP
approved: LKP
date: JUNE 05, 2020
PROJECT NUMBER:
1006
SHEET NUMBER:
E-502

© 2020 - Moody & Phillips Electric Co.

6/10/2020 4:02:37 PM

TX Firm Registration #F-000553

© 2020 - Moody & Phillips Electric Co.

6/11/2020 10:30:04 AM

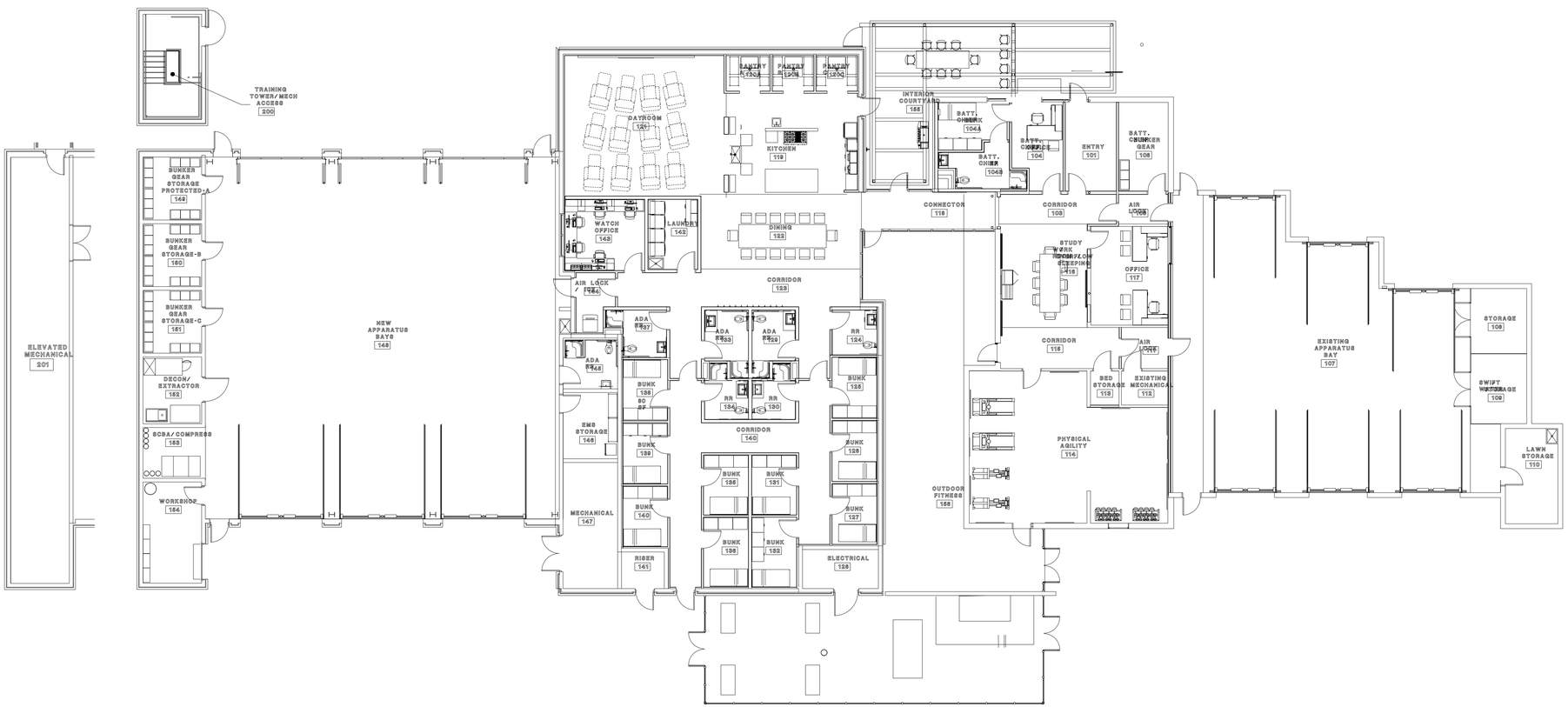

GENERAL NOTES

1. REFER TO ARCHITECTURAL PLANS TO DETERMINE AREAS OF RENOVATION AND NEW CONSTRUCTION.
2. THE FIRE ALARM CONTRACTOR IS RESPONSIBLE FOR THE DESIGN AND INSTALLATION OF NEW EQUIPMENT AND DEVICES AS REQUIRED FOR THE AREAS OF RENOVATION AND NEW CONSTRUCTION.
3. THE FIRE ALARM CONTRACTOR SHALL MODIFY THE EXISTING SYSTEM AS REQUIRED FOR THE AREAS OF RENOVATION AND NEW CONSTRUCTION.
4. PROVIDE NEW FIRE ALARM DEVICES AS REQUIRED BY CODE FOR REMODEL AREAS AND AREAS OF NEW CONSTRUCTION.
5. FIRE ALARM SYSTEM SHALL REMAIN OPERATIONAL DURING CONSTRUCTION.
6. FIELD VERIFY EXISTING CONDITIONS TO VERIFY THE SCOPE OF WORK REQUIRED.
7. REFER TO ARCHITECTURAL DRAWINGS FOR CODE ANALYSIS AND DEFINITION OF OCCUPANCY TYPES AND LOADS.
8. REPAIR FIRE ALARM SYSTEM SO THAT IT IS FULLY FUNCTIONAL AND MEETS ALL APPLICABLE STATE AND LOCAL CODES.
9. PROVIDE INTERLOCKING WITH ACCESS CONTROL / SECURITY SYSTEM(S) AS REQUIRED FOR AUTOMATIC RELEASE OF SECURED DOORS DURING A FIRE ALARM CONDITION.
10. PROVIDE A FIRE ALARM SYSTEM FOR ALL LEVELS OF THE TRAINING TOWER.

Architects Design Group

Architects and Planners

I.S.K. Reeves V, F.A.I.A.
Ian A. Reeves, A.I.A.
Susan Gantt A.I.A., LEED-AP

333 N. Knowles Ave.
Winter Park, Florida 32789
(407) 647-1706

Corporate Registration
Number: BR1177

STATE OF TEXAS
LEE K. PHILLIPS
83368
REGISTERED PROFESSIONAL ENGINEER
6/11/20

FIRE STATION NO.5

CITY OF LONGVIEW

CONSTRUCTION SET

REVISIONS/ADDENDA

Number	Description	Date Issued

est. 1947

MOODY & PHILLIPS ELECTRIC CO, INC.
ENGINEERING * CONSTRUCTION
1205 S. Bennett Ave.
Tyler, Texas 75701
(903) 597-5001
www.moody-phillips.com
Texas Registration # F-553

SHEET TITLE:

FIRE ALARM PLAN

scale: 3/32" = 1'-0"
drawn: CDP
checked: LKP
approved: LKP
date: JUNE 05, 2020
PROJECT NUMBER:

1006

SHEET NUMBER:

E-601

NOTES BY SYMBOL:

1. NEW 6" SANITARY SEWER LINE TO SANITARY SEWER MAIN. SEE CIVIL PLANS FOR CONTINUATION.
2. NEW 2" DOMESTIC COLD WATER LINE TO MAIN. SEE CIVIL PLANS FOR CONTINUATION.
3. NEW 6" FIRE SERVICE LINE TO DOMESTIC WATER MAIN. SEE CIVIL PLANS FOR CONTINUATION.
4. NEW 4" STORM DRAIN LINE TO STORM LINE MAIN. SEE CIVIL PLANS FOR CONTINUATION.
5. PROVIDE SAMPLE WELL (PARK USA MODEL NO. SWB-154 OR APPROVED EQUAL).
6. PROVIDE SAND/ OIL INTERCEPTOR (PARK USA MODEL CMP-100 OR APPROVED EQUAL).
7. PROVIDE GREASE INTERCEPTOR (PARK USE MODEL GT-1000 OR APPROVED EQUAL).
8. TIE SANITARY SEWER LINE TO EXISTING SANITARY SEWER MAIN. CONTRACTOR TO VERIFY SIZE, LOCATION, CONDITION AND INVERT ELEVATION OF EXISTING SANITARY SEWER LINE PRIOR TO CONNECTION OF NEW WORK.

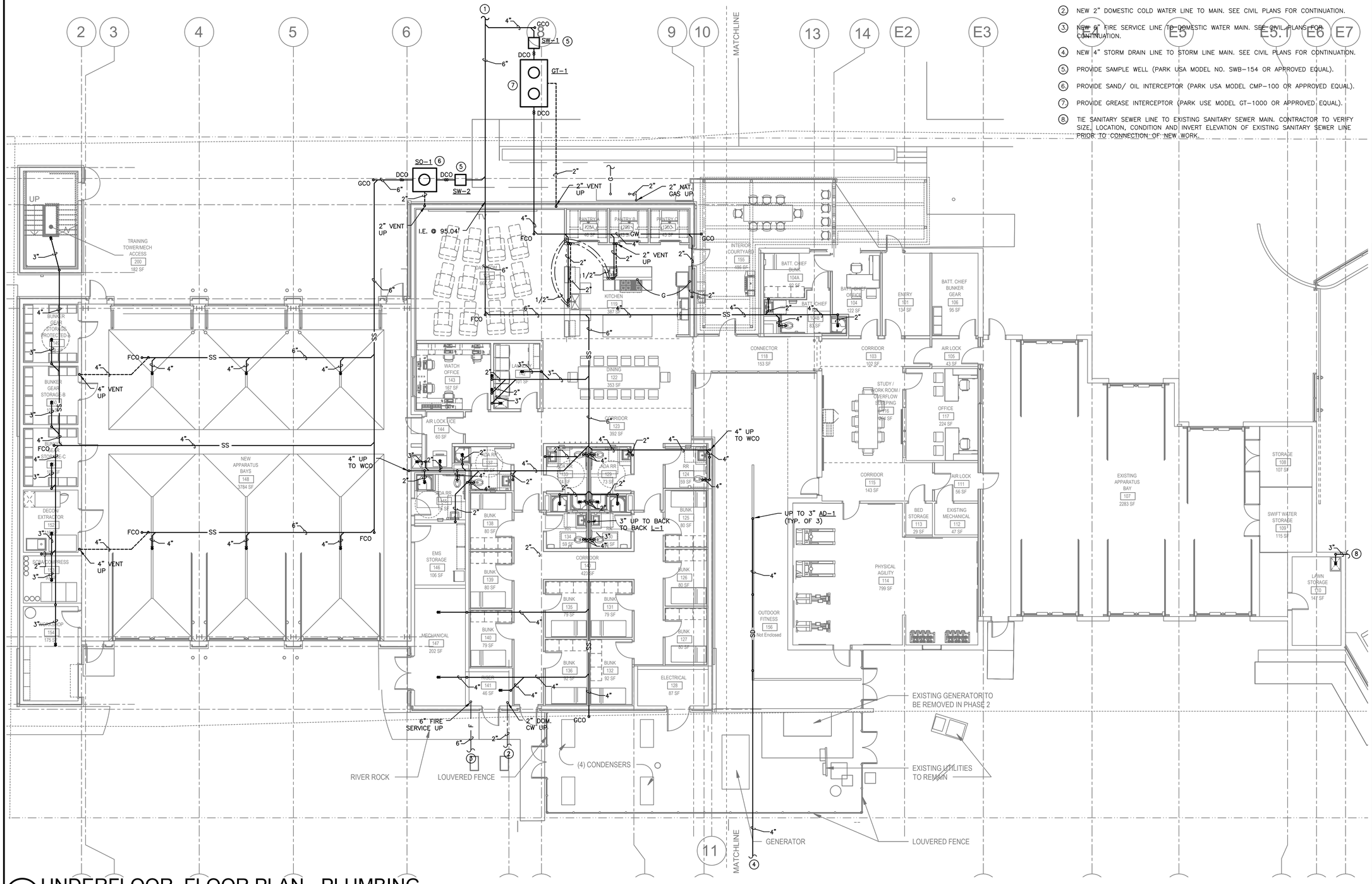

1 UNDERFLOOR FLOOR PLAN - PLUMBING
1/8" = 1'-0"

Architects Design Group

Architects and Planners
I.S.K. Reeves V, F.A.I.A.
Ian A. Reeves, A.I.A.
Susan Gantt A.I.A., LEED-AP

333 N. Knowles Ave.
Winter Park, Florida 32789
(407) 647-1706

Corporate Registration Number: BR1177

STATE OF TEXAS
JAMES K HOLLAND
92702
LICENSED
PROFESSIONAL ENGINEER
6/10/2020

FIRE STATION NO.5

CITY OF LONGVIEW

100% BID SET SUBMITTAL

The architect hereby expressly reserves his common law copyright and other property rights in these drawings. These drawings shall not be reproduced without written permission and consent of the architect, nor are they to be assigned to any party without first obtaining written permission and consent.

REVISIONS/ADDENDA

Number	Description	Date Issued

SHEET TITLE:
UNDERFLOOR PLAN - PLUMBING

scale: 1/8" = 1'-0"
drawn: Author
checked: Checker
approved: Approver
date: 06.05.2020
PROJECT NUMBER:
1006
SHEET NUMBER:
P-100

NOTES BY SYMBOL:

1. PROVIDE 1/2" DOMESTIC COLD WATER LINE, SHUTOFF VALVE AND FILTER TO COFFEE MAKER.
2. PROVIDE 3/4" DOMESTIC HOT AND COLD WATER LINE DN. TO ISLAND SINK.
3. PROVIDE 1/2" DOMESTIC CW AND 1/2" HW DOWN TO SHOWER.
4. DCBFP1: 2" DOUBLE CHECK BACKFLOW PREVENTER (WATTS MODEL NO. 007-QT OR APPROVED EQUAL).
5. DCBFP2: 6" DOUBLE CHECK BACKFLOW PREVENTER FOR FIRE WATER SERVICE (WATTS MODEL NO. 757-QT OR APPROVED EQUAL).
6. ROUTE T & P LINE FROM WATER HEATER TO FLOOR SINK AND TERMINATE AT AN APPROVED DISTANCE ABOVE THE DRAIN.
7. THE FIRE PROTECTION SYSTEM FOR THIS FACILITY SHALL BE DESIGN-BUILD BY THE FIRE PROTECTION CONTRACTOR/ ENGINEER.
8. PROVIDE 1/2" DOMESTIC HOT AND COLD WATER LINE DN. TO MOP SINK.
9. PROVIDE TRAP GUARD TO ALL FLOOR DRAINS AND FLOOR SINKS.
10. ROUTE CONDENSATE LINE TO EXISTING MECH. ROOM FLOOR DRAIN AND TERMINATE AT AN APPROVE DISTANCE.
11. GAS REGULATOR FROM LESS THAN 2LBS. TO 4 OUNCES @ 115 CFH.
12. GAS REGULATOR FROM LESS THAN 2LBS. TO 4 OUNCES @ 100 CFH.
13. PROVIDE 1/2" DOMESTIC CW TO DISHWASHER.
14. PROVIDE 1/2" DOMESTIC CW AND HW LINE AND 1 1/2" VENT TO MOP SINK. CONNECT NEW UTILITY LINES TO NEAREST EXISTING PLUMBING LINES.
15. PROVIDE NATURAL GAS LINE TO EMERGENCY GENERATOR.
16. PROVIDE EMERGENCY NATURAL GAS SHUT-OFF VALVE MOUNTED TO WALL AT AN APPROVED DISTANCE IN ACCORDANCE WITH THE GOVERNING CODE.

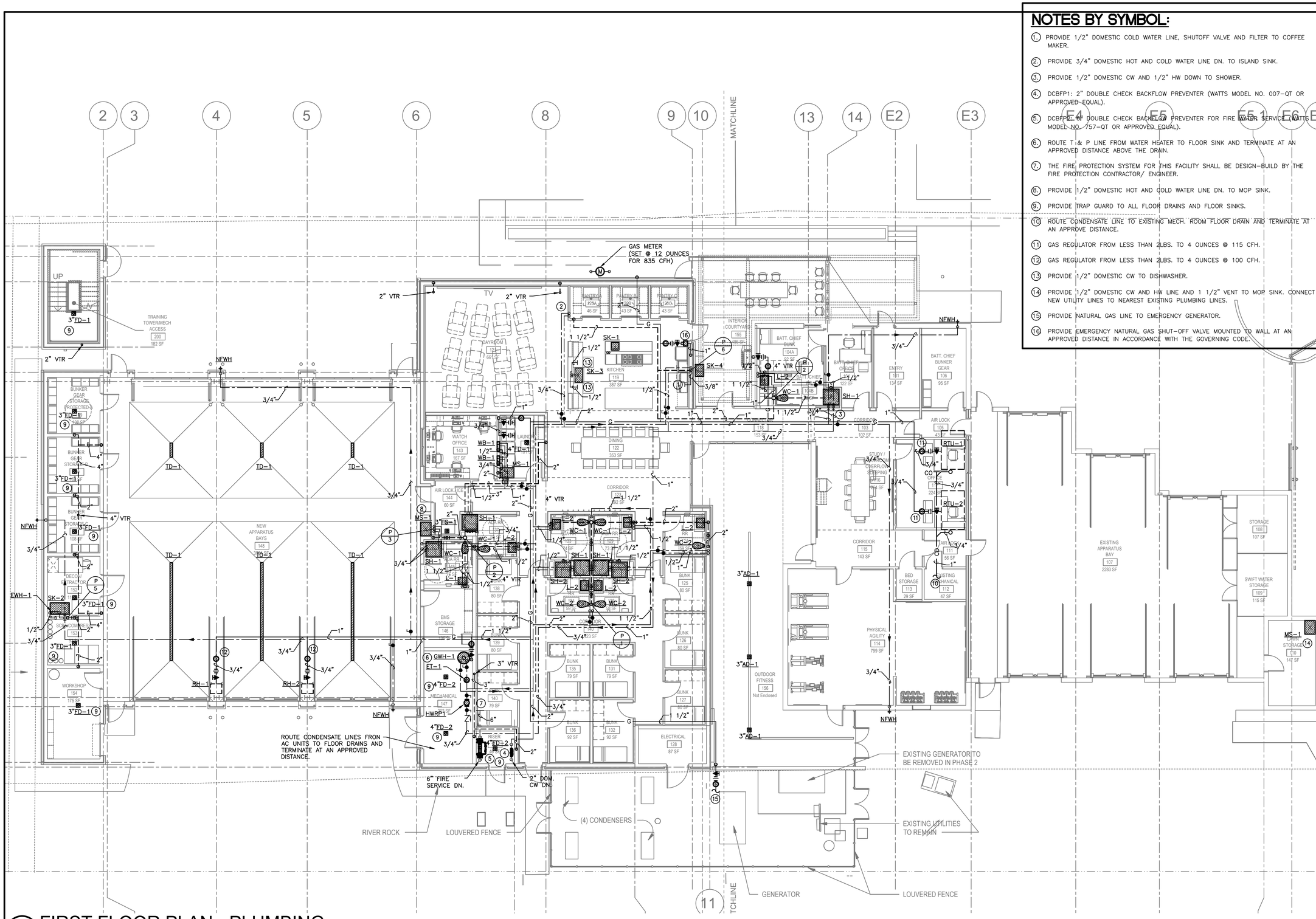

1 FIRST FLOOR PLAN - PLUMBING
1/8" = 1'-0"

Architects Design Group

Architects and Planners
I.S.K. Reeves V, F.A.I.A.
Ian A. Reeves, A.I.A.
Susan Gantt A.I.A., LEED-AP

333 N. Knowles Ave.
Winter Park, Florida 32789
(407) 647-1706

Corporate Registration Number: BR1177

STATE OF TEXAS
JAMES K HOLLAND
92702
LICENSED
PROFESSIONAL ENGINEER
6/10/2020

FIRE STATION NO.5

CITY OF LONGVIEW

100% BID SET SUBMITTAL

The architect hereby expressly reserves his common law copyright and other property rights in these drawings. These drawings shall not be reproduced without written permission and consent of the architect, nor are they to be assigned to any party without first obtaining written permission and consent.

REVISIONS/ADDENDA

Number	Description	Date Issued

SHEET TITLE:
FIRST FLOOR PLAN - PLUMBING

scale: 1/8" = 1'-0"
drawn: Author
checked: Checker
approved: Approver
date: 06.05.2020
PROJECT NUMBER:
1006
SHEET NUMBER:
P-200

PLUMBING FIXTURE SPECIFICATION SCHEDULE

FIXTURE DESIG	AGE GROUP	FIXTURE DESCRIPTION	MANUFACTURERING COMPANY	MODEL NUMBER	APPROVED FIXTURE EQUAL	MANUFACTURER, DESCRIPTION OF VALVES, FAUCETS, ACCESSORIES & APPROVED EQUALS
♿WC-1	ADULT	WATER CLOSET: FLOOR MOUNTED, FLUSH VALVE TYPE	AMERICAN STANDARD	3043.660	KOHLER, ELJER	SLOAN OPTIMA 180 ES-S FLUSH VALVE, CHURCH 9500C WHITE OPEN FRONT SEAT, ZURN CARRIER
WC-2	ADULT	WATER CLOSET: FLOOR MOUNTED, FLUSH VALVE TYPE	AMERICAN STANDARD	3451.660	KOHLER, ELJER	SLOAN OPTIMA 180 ES-S FLUSH VALVE, CHURCH 9500C WHITE OPEN FRONT SEAT, ZURN CARRIER
UR-1	ADULT	URINAL: WALL MOUNTED, FLUSH VALVE TYPE	AMERICAN STANDARD	6541.132	KOHLER, ELJER	SLOAN OPTIMA 186 ES-S FLUSH VALVE, ZURN CARRIER
♿ L-1	ADULT	LAVATORY: WALL-HUNG, ENAMELED CAST IRON, 4" CENTER FAUCET HOLES	AMERICAN STANDARD	LUCERNE 0355.012	KOHLER, ELJER	SLOAN OPTIMA ETF-600 FAUCET, TRUBRO LAVGUARD, OR MOEN 8301 OR KOHLER K-13662
♿ L-2	ADULT	LAVATORY: DROP-IN, MANUAL HAND WASHING FAUCET	AMERICAN STANDARD	AQUALYN 0475.020	KOHLER, ELJER	SLOAN OPTIMA ETF-600 FAUCET, TRUBRO LAVGUARD, OR MOEN 8301 OR KOHLER K-13662
SK-1	ADULTS	SINK: ONE COMPARTMENT, STAINLESS STEEL, H & CW HAND FAUCET W/ WRIST BLADE HANDLES, 7 1/2" DEEP SK	JUST	SL-2131-A-GR	ELKAY	JUST FAUCET JTR-50, JB-99 DRAIN
SK-2	ADULTS	SINK: ONE COMPARTMENT, STAINLESS STEEL W/ INTEGRAL DRAINBOARD, SINGLE HANDLE KITCHEN FAUCET W/ SWIVEL SPOUT, 10" DEEP SK	JUST	JZSI-1937-R	ELKAY	JUST FAUCET JPR-801, JB-99 DRAIN
SK-3	ADULTS	SINK: ONE COMPARTMENT, STAINLESS STEEL, APRON TYPE, SINGLE HANDLE KITCHEN FAUCET W/ SWIVEL SPOUT, 10 1/2" DEEP SK	JUST	JUBE-19530-A	ELKAY	JUST FAUCET JPR-701, JB-99 DRAIN
SK-4	ADULTS	SINK: TWO-COMPARTMENT, TYPE 316 STAINLESS STEEL, UNDERMOUNT, SINGLE HANDLE KITCHEN FAUCET W/ SWIVEL SPOUT, 6" DEEP SK	JUST	JZRL-1832-M	ELKAY	JUST FAUCET JBF-1600-N, J-35 DRAIN
♿SH-1	ADULTS	SHOWER: ADA COMPLIANT, STALL , H & CW MIXING VALVE W/ SHOWER HEAD	AQUA BATH	C4136BF-FUS 2"	AMERICAN STANDARD, KOHLER	AMERICAN STANDARD MODEL NO. TU052507 SHOWER TRIM KIT WITH PRESSURE BALANCE CARTRIDGE
SH-2	ADULTS	SHOWER: BUILD-UP, TYPE WALL, H & CW MIXING VALVE W/ SHOWER HEAD	–	–	KOHLER, ELJER	AMERICAN STANDARD MODEL NO. TU052507 SHOWER TRIM KIT WITH PRESSURE BALANCE CARTRIDGE
MS-1	–	MOP SINK: TERRAZZO, 24 X24X12 NEO-CORNER, FAUCET W/ VACUUM BREAKER	FIAT	TSBC-1611	STERN WILLIAMS	T-10-VB FAUCET, T-40 MOP HANGER, T-35 HOSE & BRACKET, C-10 SILAPRENE SEALANT
FD-1	–	FLOOR DRAIN: TOILET ROOMS FINISHED AREAS	J.R.SMITH	2005	JOSAM, WADE, ZURN	6" DIAMETER VANDAL PROOF NICKEL BRONZE STRAINER, PROVIDE TRAP PRIMER
TD-1	–	TRENCH DRAIN: APPARATUS BAY AREA	ZURN	Z866	JOSAM, WADE, J.R. SMITH	6 1/4" WIDE REVEAL TRENCH DRAIN SYSTEM, NO-HUB BOTTOM OUTLET, DUCTILE IRON CAST BAR GRATE
FS-1	–	FLOOR SINK: FIRE RISER ROOM	ZURN	Z1900	JOSAM, WADE, ZURN	SANI-FLOOR RECEPTOR, DEEP CAST IRON BODY, LIGHT DUTY GRATE WITH 1/2" SLOTTED OPENINGS
TP-1	–	TRAP PRIMER VALVE: BACKFLOW PREVENTER SEAL, VACUUM BREAKER, FOR ONE OUTLET OR CONNECT TO DU(S)	PPP, INC	PRIMERITE	PPP, INC	
DU	–	DISTRIBUTION UNIT FOR TRAP PRIMER VALVE W/ ONE THRU FOUR 1/2" OUTLET AS REQUIRED	PPP, INC	DU-2, DU-3, DU-4	PPP, INC	
LTPV	–	TRAP PRIMER VALVE: UNDER LAV EXPOSED TRAP PRIMER VALVE FOR ONE FLOOR DRAIN	JOSAM	SERIES 88250-10-90	ZURN, WADE	
FCO	–	FLOOR CLEANOUT	J.R. SMITH	4020S	JOSAM, WADE, ZURN	
WCO	–	WALL CLEANOUT	J.R. SMITH	4402	JOSAM, WADE, ZURN	
GCO	–	GROUND CLEANOUT	J.R. SMITH	4250	JOSAM, WADE, ZURN	
TMV-1	–	THERMOSTATIC MIXING VALVE	SYMMONS	5-120	SPEAKMAN, WATTS	
ET-1	–	THERMAL EXPANSION TANK	AMTROL	ST-5-C	WATTS, PROFLO	
NFWH-1	–	NON-FREEZE WALL HYDRANT	WOODFORD	B65	JOSAM, J.R. SMITH	
WB-1	–	WASHING MACHINE BOX (METAL)	OATEY	38529	EASTMAN, PLUMBEST	
AD-1	–	AREA DRAIN: DUCO CAST IRON BODY AND FLASHING CLAMP WITH SEEPAGE OPENINGS AND SECURED SQUARE HOLE LIGHT DUTY GRATE	J.R. SMITH	1470	WADE, JOSAM	

SHOCK ABSORBER SCHEDULE

DESIGNATION	P.D.I. SYMBOLS	FIXTURE UNITS	CONNECTION SIZE
SA	A	1-11	1/2"
SA	B	12-32	3/4"
SA	C	33-60	1"
APPROVED MANUFACTURERS:	JOSAM, J.R. SMITH, PPP INC, ZURN, WADE		

PUMP SCHEDULE

MARK	HWRP-1
SERVICE	HOT WATER RETURN LINE
TYPE	IN-LINE
GPM	5
HEAD (FT)	15
RPM	3450
HP	0.33
VOLTAGE/PHASE	115/1
MANUFACTURER	TACO
MODEL NO.	2400 SERIES
SUMP SIZE	–
REMARKS	STAINLESS STEEL, FLANGED

ROUGH-IN SCHEDULE

FIXTURE	DESCRIPTION	CONNECTION SIZE			
		W	V	CW	HW
WC	FLUSH VALVE WATER CLOSET (ADA)	3"	2"	1"	–
MS	MOP SINK	3"	2"	3/4"	3/4"
LV	WALL HUNG LAVATORY (ADA)	2"	2"	1/2"	1/2"
SK	COUNTERTOP SINGLE COMP. SINK	2"	2"	3/4"	3/4"
FD	FLOOR DRAIN	3"	2"	1/2"	–
WH	WATER HEATER	3/4"	–	3/4"	3/4"
EWC	ELECTRIC WATER COOLER	2"	–	1/2"	–

WATER HEATER SCHEDULE

MARK	GWH-1	EWH-1	
SERVICE	HOT WATER	HOT WATER	
TYPE	STORAGE TANK TYPE	POINT-OF-USE	
GALLAON CAP.	100	–	
RECOVERY @ 90° RISE (GPH)	198	–	
VOLTAGE/PHASE	120/1	120/1	
GAS (MBH)	150	–	
MANUFACTURER	A.O. SMITH	EEMAX	
MODEL NO.	BTH-150	MB004120T	
REMARKS	ASME RATED T&P VALVE	ASME RATED T&P VALVE	

PLUMBING GENERAL NOTES:

1.) THE PLUMBING WORK SHALL BE PERFORMED IN STRICT ACCORDANCE WITH THE LATEST EDITION OF THE APPLICABLE PLUMBING AND BUILDING CODES AS WELL AS ALL LOCAL REGULATIONS THAT MAY APPLY. IN CASE OF CONFLICT BETWEEN THE CONTRACT DOCUMENTS AND A GOVERNING CODE OR ORDINANCE THE MORE STRINGENT STANDARD SHALL APPLY.

2.) ALL PLUMBING WORK SHALL BE COORDINATED WITH ALL OTHER TRADES BEFORE PROCEEDING WITH THE INSTALLATION.

3.) INVERT ELEVATIONS AND EXACT LOCATIONS OF ALL EXISTING UTILITIES SHALL BE CHECKED BEFORE PROCEEDING WITH NEW WORK.

4.) NO CHANGES ARE TO BE MADE IN PLUMBING LAYOUT WITHOUT WRITTEN PERMISSION BY THE ARCHITECT OR ENGINEER.

5.) NO PIPING SHALL RUN EXPOSED IN FINISHED AREAS.

6.) CONTRACTOR SHALL BE RESPONSIBLE FOR OBTAINING ALL NECESSARY PERMITS AND FOR PAYING RELATED FEES.

7.) ROUGHING DIMENSIONS OF TOILET FIXTURES MUST BE COORDINATED WITH THE GENERAL CONTRACTOR.

8.) PROVIDE SHUTOFF VALVES FOR WATER ENTRANCE TO THE BUILDING. PROVIDE DIELECTRIC FITTINGS OR COUPLINGS WHEREVER DISSIMILAR METALS ARE JOINED.

9.) INSTALL ALL REQUIRED CLEANOUTS TO CLEAR EQUIPMENT AND FIXTURES.

10.) ALL WORK SHALL BE PROPERLY TESTED, BALANCED, AND CLEANED AND DISINFECTED. PROVIDE A ONE YEAR WARRANTY FROM DATE OF FINAL INSPECTION ON ALL PARTS AND LABOR.

11.) PITCH ALL WASTE AND SOIL PIPING AT MAXIMUM SLOPE POSSIBLE, BUT NOT LESS THAN 1/8" PER FOOT, EXCEPT WHERE NOTED.

12.) PROVIDE ALL PIPE OPENINGS THROUGH PARTITIONS WITH PIPE SLEEVES. PENETRATING FIRE RATED PARTITIONS, THE SPACE BETWEEN THE PIPE AND THE SLEEVE SHALL BE SEALED WITH FIRE STOPPING MATERIAL.

13.) ALL FLOOR DRAINS IN DRY AREAS SHALL HAVE TRAP PRIMERS.

14.) CONTRACTORS ARE TO EXAMINE ALL FIXTURE SCHEDULES, LEGENDS AND RELATED MISCELLANEOUS DETAILS BEFORE PROCEEDING WITH ANY ROUGH-IN WORK.

15.) PURGE ALL WATER LINES BEFORE FINAL CONNECTION.

16.) NO PVC ABOVE GRADE UNLESS APPROVED BY THE OWNER.

17.) CONTRACTOR SHALL VISIT AND FIELD VERIFY SITE CONDITION PRIOR TO START OF NEW WORK.

PLUMBING SYMBOLS AND LEGEND

—— - ——	COLD WATER (CW)
—— - - ——	HOT WATER (HW)
——CD——	CONDENSATE DRAIN
—— G ——	NATURAL GAS LINE
—— A ——	AIR INTAKE LINE
----------	PLUMBING VENT (V)
——SS——	SANITARY WASTE (SS) – BELOW SLAB/GRADE
	DIRECTION OF FLOW
	PIPE UP/DOWN
	BALL VALVE
	SOFT COPPER PIPING UNDERFLOOR (CW SHOWN)
EQP	FIXTURE IDENTIFICATION
	PLAN NOTE
	OVERFLOW DRAIN (OD-1)
AFF/AFG	ABOVE FINISHED FLOOR/GRADE
IW	INDIRECT WASTE

CO	CLEANOUT
WCO	WALL CLEANOUT
FCO	FLOOR CLEANOUT
DCO	DOUBLE CLEANOUT
A/C	ABOVE CEILING
AS	ANGLESTOP
B/F	BELOW FLOOR
FD	FLOOR DRAIN
GCO	GRADE CLEANOUT
OD	STORM OVERFLOW DRAIN
SD	STORM ROOF DRAIN
FPC	FIRE PROTECTION CONTRACTOR
MC	MECHANICAL CONTRACTOR
EC	ELECTRICAL CONTRACTOR
B/G	BELOW GRADE
POC	POINT OF CONNECTION
	CONNECTION TO EXISTING
AFF	ABOVE FINISH FLOOR

Architects Design Group

Architects and Planners

I.S.K. Reeves V, F.A.I.A.
Ian A. Reeves, A.I.A.
Susan Gantt A.I.A., LEED-AP

333 N. Knowles Ave.
Winter Park, Florida 32789
(407) 647-1706

Corporate Registration Number: BR1177

STATE OF TEXAS
JAMES K HOLLAND
92702
LICENSED ARCHITECT
5/8/2020

FIRE STATION NO.5

CITY OF LONGVIEW

100% BID SET

The architect hereby expressly reserves his common law copyright and other property rights in these drawings. These drawings shall not be reproduced without written permission and consent of the architect, nor are they to be assigned to any party without first obtaining written permission and consent.

REVISIONS/ADDENDA

Number	Description	Date Issued

SHEET TITLE:

PLUMBING SCHEDULES AND LEGEND

scale: 1/8" = 1'-0"
drawn: Author
checked: Checker
approved: Approver
date: 06.05.2020

PROJECT NUMBER:

1006

SHEET NUMBER:

P-300

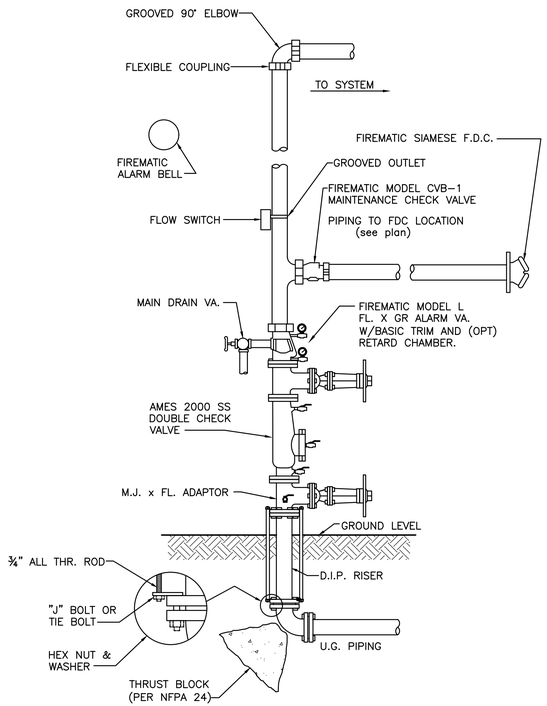

01 SPRINKLER RISER DETAIL
SCALE: NONE

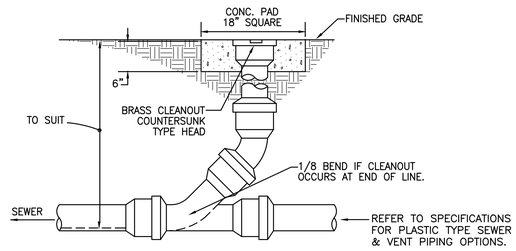

02 CLEANOUT TO GRADE (GCO) DETAIL
SCALE: NONE

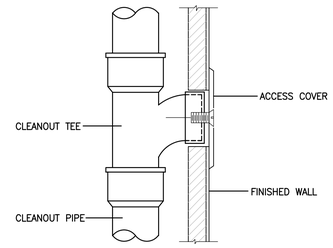

03 CLEANOUT TO WALL DETAIL
SCALE: NONE

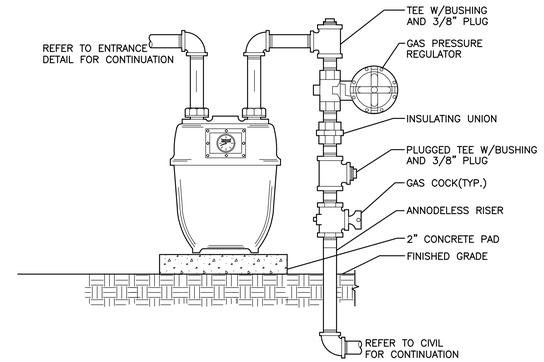

04 TYPICAL GAS SERVICE METER DETAIL
SCALE: NONE

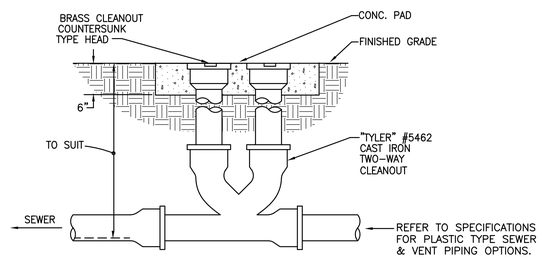

05 2-WAY CLEANOUT TO GRADE DETAIL
SCALE: NONE

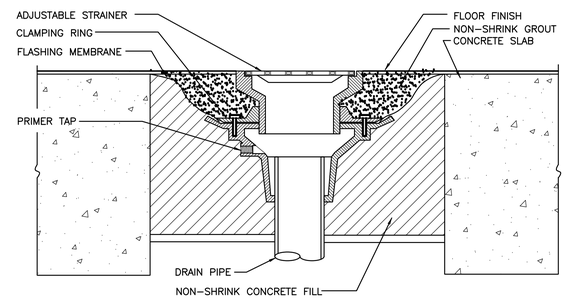

06 FLOOR DRAIN DETAIL
SCALE: NONE

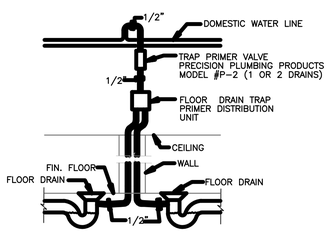

07 TRAP PRIMER DETAIL
SCALE: NONE

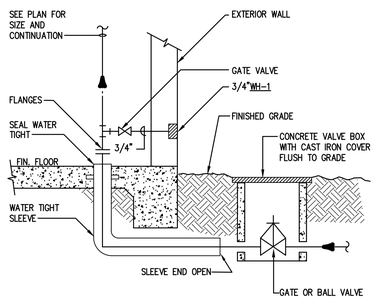

08 WATER PIPE ENTRY DETAIL
SCALE: NONE

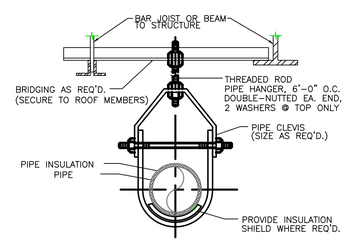

09 PIPE HANGER DETAIL
SCALE: NONE

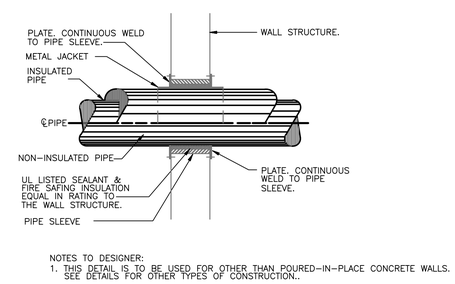

NOTES TO DESIGNER:
1. THIS DETAIL IS TO BE USED FOR OTHER THAN POURED-IN-PLACE CONCRETE WALLS. SEE DETAILS FOR OTHER TYPES OF CONSTRUCTION..

10 PIPE PENETRATION DETAIL
SCALE: NONE

Architects Design Group

Architects and Planners
I.S.K. Reeves V, F.A.I.A.
Ian A. Reeves, A.I.A.
Susan Gantt A.I.A., LEED-AP

333 N. Knowles Ave.
Winter Park, Florida 32789
(407) 647-1706

Corporate Registration Number: BR1177

STATE OF TEXAS
JAMES K HOLLAND
92702
LICENSED PROFESSIONAL ENGINEER
5/8/2020

FIRE STATION NO.5

CITY OF LONGVIEW

100% BID SET

The architect hereby expressly reserves his common law copyright and other property rights in these drawings. These drawings shall not be reproduced without written permission and consent of the architect, nor are they to be assigned to any party without first obtaining written permission and consent.

REVISIONS/ADDENDA

Number	Description	Date Issued

SHEET TITLE:
PLUMBING DETAILS

scale: 1/8" = 1'-0"
drawn: Author
checked: Checker
approved: Approver
date: 06/05/2020
PROJECT NUMBER:
1006
SHEET NUMBER:
P-400

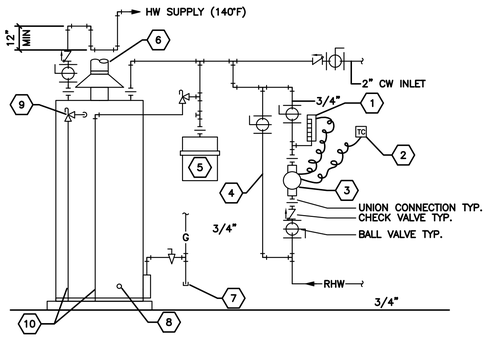

NOTES THIS DETAIL:

1. DIFFERENTIAL TEMPERATURE CONTROL BY JOHNSON CONTROLS MODEL #R24DG-1 OPERATE AT 10&&D FALL FOR ON/OFF OPERATION WITH JOHNSON CONTROL THERMOSTAT A-19 SERIES.
2. HONEY WELL TIME CLOCK 7 DAY, 24 HOUR PROGRAMMABLE FOR OPERATION.
3. CIRCULATION PUMP (P-1).
4. 3/4" BY-PASS.
5. THERMAL EXPANSION TANK BY WATTS.
6. WATER HEATER FLUE THROUGH ROOF-CLASS "B" GAS VENT.
7. GAS COCK VALVE WITH FULL SIZE DIRT LEG.
8. 3/4" DRAIN WITH VALVE AND CAP.
9. COMBINATION T&P RELIEF VALVE PER LOCAL CODE.
10. RUN T&P DISCHARGE AND EXPANSION TANK RELIEF DISCHARGE TO FLOOR SINK.

01 NATURAL GAS WATER HEATER DETAIL
SCALE: NONE

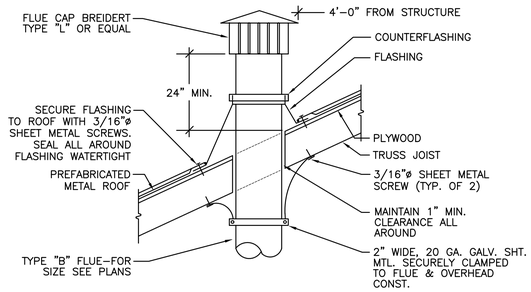

02 FLUE THRU ROOF DETAIL
SCALE: NONE

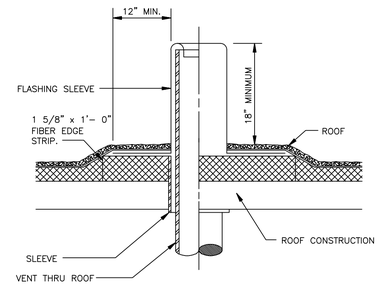

03 VENT THRU ROOF DETAIL
SCALE: NONE

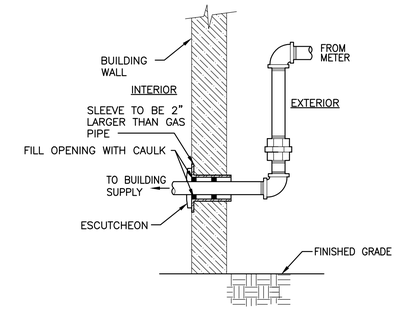

04 TYPICAL GAS SERVICE ENTRANCE DETAIL
SCALE: NONE

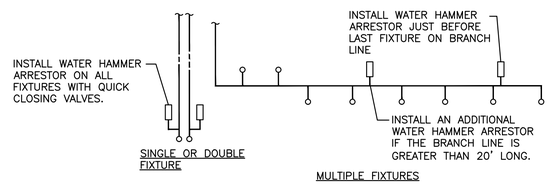

PDI SIZE	PIPE SIZE	FIXTURE UNIT LOAD
A	1/2"	1-11
B	3/4"	12-32
C	1"	33-60
D	1-1/4"	61-113
E	1-1/2"	114-154
F	2"	154-330

WATER SUPPLY FIXTURE UNIT (WSFU)		
FIXTURE	COLD	HOT
VALVE WATER CLOSET	5	--
URINAL	4	--
LAVATORY/SINK	1.5	1.5
JANITOR'S SINK	3	3

COMMENTS:
1. WATER HAMMER ARRESTERS SHALL BE HAVE PISTON AND O-RING CONSTRUCTION WITH PDI #WH-201, ASSE # 1010 AND ANSI # A112.26.1M CERTIFICATION. INSTALL IN HORIZONTAL OR VERTICAL POSITION, BUT NEVER UPSIDE DOWN. SIZE THE UNITS AS SHOWN PER THE TABLES SHOWN ABOVE.

05 WATER HAMMER ARRESTOR DETAIL
SCALE: NONE

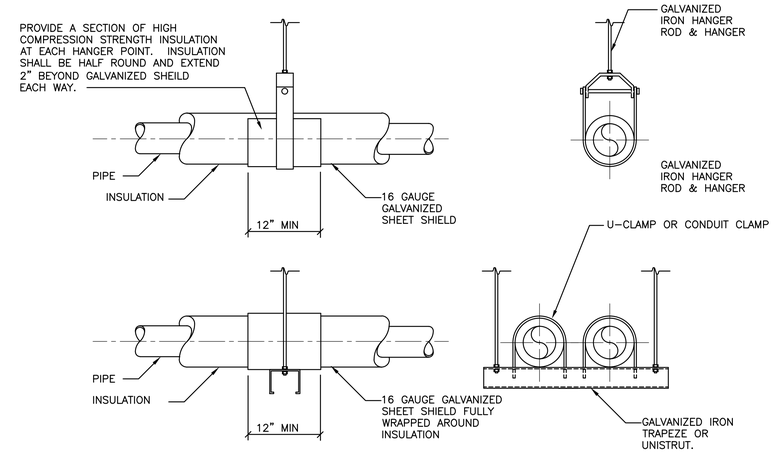

06 PIPE HANGER DETAIL
SCALE: NONE

Architects Design Group

Architects and Planners
I.S.K. Reeves V, F.A.I.A.
Ian A. Reeves, A.I.A.
Susan Gantt A.I.A., LEED-AP

333 N. Knowles Ave.
Winter Park, Florida 32789
(407) 647-1706

Corporate Registration Number: BR1177

STATE OF TEXAS
JAMES K HOLLAND
92702
LICENSED
PROFESSIONAL ENGINEER
5/8/2020

FIRE STATION NO.5

CITY OF LONGVIEW

100% BID SET

The architect hereby expressly reserves his common law copyright and other property rights in these drawings. These drawings shall not be reproduced without written permission and consent of the architect, nor are they to be assigned to any party without first obtaining written permission and consent.

REVISIONS/ADDENDA

Number	Description	Date Issued

SHEET TITLE:

PLUMBING DETAILS

scale: 1/8" = 1'-0"
drawn: Author
checked: Checker
approved: Approver
date: 06/05/2020
PROJECT NUMBER:
1006
SHEET NUMBER:
P-401

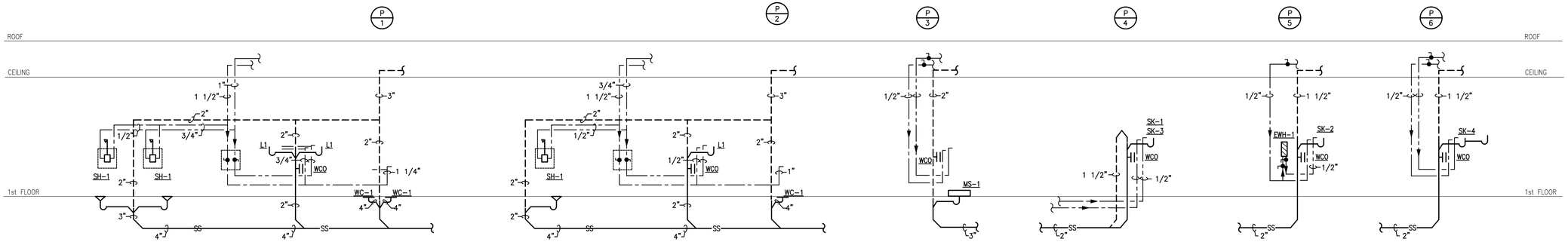

1 PLUMBING RISER DIAGRAM
SCALE: NONE

PLUMBING RISER GENERAL NOTES:

1. REFER TO FLOOR PLANS FOR PLUMBING FIXTURE DESIGNATIONS. CONTRACTOR WILL BE RESPONSIBLE FOR PROVIDE PLUMBING FIXTURES AS SHOWN ON THE PLUMBING AND ARCHITECTURAL DRAWINGS.
2. VERIFY ALL LOCATIONS OF HANDICAPPED PLUMBING FIXTURES WITH ARCHITECTURAL DRAWINGS.
3. INSTALL AIR CHAMBERS ON ALL EACH HOT & COLD WATER ROUGH-IN, ALSO PROVIDE SCHOCK ABSORBERS ON ALL QUICK CLOSING VALVES.
4. COORDINATE INSTALLATION OF ALL ACCESS PANELS WITH ARCHITECT PRIOR TO INSTALLATION.
5. ARCHITECT RESERVES THE RIGHT TO RELOCATE ACCESS PANELS WITHOUT ADDITIONAL COST. CONTRACTOR MAY RELOCATE TRAP PRIMERS TO ABOVE CEILINGS IF ALLOWED BY ARCHITECT, IF RELOCATED THE CONTRACTOR SHALL PROVIDE ACCESS PANEL IN GYPBOARD CEILINGS.

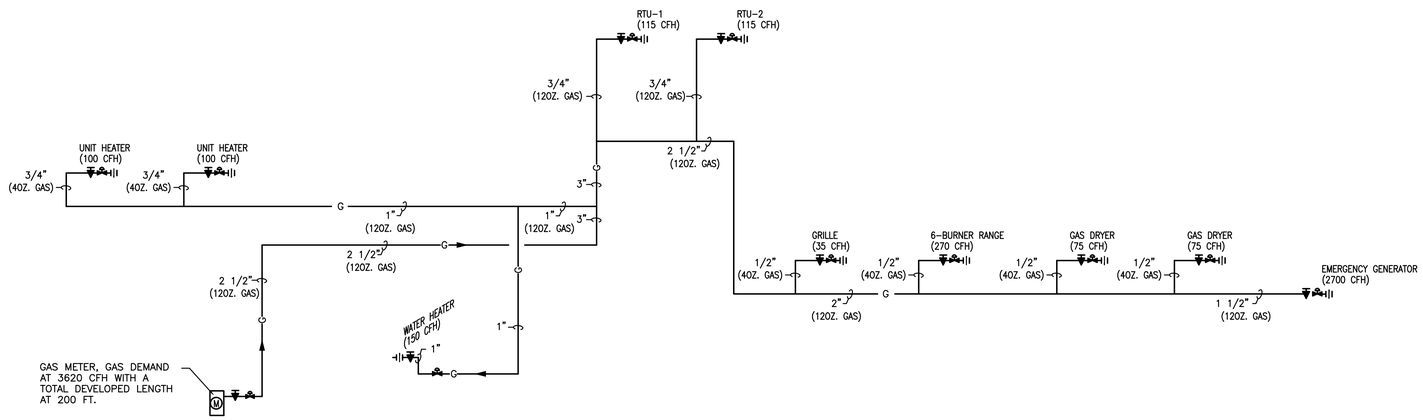

2 GAS RISER DIAGRAM
SCALE: NONE

GAS DEMAND SCHEDULE

DESCRIPTION	CFH
(1) WATER HEATER (@150 CFH)	150
(2) ROOF TOP UNITS (115 CFH TOTAL)	115
(1) GRILLE (@35 CFH)	35
(6) BURNER RANGE (@45 CFH)	270
(2) GAS DRYERS (@75 CFH)	150
(2) GAS UNIT HEATERS (@100 CFH)	200
(1) EMERGENCY GENERATOR (@2700 CFH)	2700
TOTAL BUILDING GAS DEMAND (CFH)	3620
TOTAL DEVELOPED LENGTH (FT)	200
GAS PRESSURE LEAVING PRESSURE REGULATOR	LESS THAN 2LBS.

* NATURAL GAS IS SIZE PER THE GOVERNING IFGC (INTERNATIONAL FUEL GAS CODE).

Architects Design Group

Architects and Planners

I.S.K. Reeves V, F.A.I.A.
Ian A. Reeves, A.I.A.
Susan Gantt A.I.A., LEED-AP

333 N. Knowles Ave.
Winter Park, Florida 32789
(407) 647-1706

Corporate Registration
Number: BR1177

STATE OF TEXAS
JAMES K HOLLAND
92702
LICENSED PROFESSIONAL ENGINEER
5/8/2020

FIRE STATION NO.5

CITY OF LONGVIEW

100% BID SET

The architect hereby expressly reserves his common law copyright and other property rights in these drawings. These drawings shall not be reproduced without written permission and consent of the architect, nor are they to be assigned to any party without first obtaining written permission and consent.

REVISIONS/ADDENDA

Number	Description	Date Issued

*SHEET TITLE:

PLUMBING RISERS

scale: 1/8" = 1'-0"
drawn: Author
checked: Checker
approved: Approver
date: 06/05/2020
PROJECT NUMBER:
1006
SHEET NUMBER:
P-500