© 2020 Brinkley Sargent Wigginton Architects, Inc.

LONGVIEW POLICE DEPARTMENT

CLOSE UP AT PUBLIC ENTRY

NW CORNER AT TRELLIS STRUCTURE

Architect: Brinkley Sargent Wigginton Architects (972) 960-9970
Landscape: Kendall Landscape Architecture (214) 739-3226
Structural: L.A. Fuess Partners, Inc (214) 593-1118
MEP: M-E Engineers (214) 741-1589
Civil: KSA Engineers, Inc (903) 236-7700
Technology: M-E Engineers (303) 421-6656

BRINKLEY SARGENT WIGINTON ARCHITECTS

LONGVIEW POLICE DEPARTMENT

518 W. SOUTH ST. LONGVIEW, TEXAS 75601

HISTORY

#	DATE	DESCRIPTION

08/19/2020

COVER SHEET

BID ISSUE

21719
08/19/2020

CVR-1

8/19/2020 4:40:55 PM

G:\Work Locals\LPD_CENTRAL_A19_bcochran_08-18-2020.rvt

© 2020 Brinkley Sargent Wigginton Architects, Inc.

LONGVIEW POLICE DEPARTMENT

ABBREVIATIONS

&	AND
@	AT
ACT	ACOUSTIC CEILING TILE
ADA	AMERICANS WITH DISABILITIES ACT
ADD	ADDENDUM
AFF	ABOVE FINISH FLOOR
ALT	ALTERNATE
ALUM	ALUMINUM
ARCH	ARCHITECTURAL
BD	BOARD
BLDG	BUILDING
BO	BOTTOM OF
BOD	BOTTOM OF DECK
CFCI	CONTRACTOR FURNISHED CONTRACTOR INSTL'D
CG	CORNER GUARD
CJ	CONTROL JOINT
CLG	CEILING
CLR	CLEAR
CMU	CONCRETE MASONRY UNIT
COL	COLUMN
CONC	CONCRETE
CONF	CONFERENCE
CONT	CONTINUOUS
CPT	CARPET
CT	CERAMIC TILE
DBL	DOUBLE
DEFS	DIRECT-APPLIED EXTERIOR FINISH SYSTEM
DEMO	DEMOLISH/DEMOLITION
DEPT	DEPARTMENT
DIA	DIAMETER
DIM	DIMENSION
DN	DOWN
DR	DOOR
DWR	DRAWER
DWG	DRAWING
EA	EACH
EIFS	EXTERIOR INSULATION AND FINISH SYSTEM
EJ	EXPANSION JOINT
ELEC	ELECTRICAL
ELEV	ELEVATION / ELEVATOR
EQ	EQUAL
EQUIP	EQUIPMENT
EXIST	EXISTING
EXT	EXTERIOR
FAR	FLOOR AREA RATIO
FD	FLOOR DRAIN
FDC	FIRE DEPARTMENT CONTROL
FE	FIRE EXTINGUISHER
FEC	FIRE EXTINGUISHER CABINET
FF	FINISH FLOOR
FFE	FINISH FLOOR ELEVATION
FF&E	FIXTURE, FURNISHINGS & EQUIPMENT
FLOUR	FLOURESCENT
FLR	FLOOR
FO	FACE OF
FOC	FACE OF CONCRETE
FOF	FACE OF FINISH
FOS	FACE OF STUD
GA	GAUGE
GALV	GALVANIZED
GWB	GYPSUM WALL BOARD
GYP	GYPSUM
HB	HOSE BIB
HGT	HEIGHT
HMTL	HOLLOW METAL
HORIZ	HORIZONTAL
HR	HOUR
HT	HEIGHT
HVAC	HEATING, VENTILATING AND AIR CONDITIONING
HW	HARDWARE
HWD	HARDWOOD
ILO	IN LIEU OF
INFO	INFORMATION
INSUL	INSULATION
INT	INTERIOR
J-BOX	JUNCTION BOX
JAN	JANITOR
JCT	JUNCTION
JT	JOINT
LAV	LAVATORY
LCD	LIQUID CRYSTAL DIODE
LED	LIGHT EMITTING DIODE
LT	LIGHT
LTG	LIGHTING
MAINT	MAINTENANCE
MAT	MATERIAL
MAX	MAXIMUM
MECH	MECHANICAL
MFR	MANUFACTURER
MIC	MICROPHONE
MISC	MISCELLANEOUS
MIN	MINIMUM
MTD	MOUNTED
MTL	METAL
N	NORTH
NIC	NOT IN CONTRACT
NO	NUMBER
NOM	NOMINAL
NRC	NOISE REDUCTION COEFFICIENT
NTS	NOT TO SCALE
OC	ON CENTER
OFCI	OWNER FURNISHED CONTRACTOR INSTALLED
OFOI	OWNER FURNISHED OWNER INSTALLED
OH	OPPOSITE HAND
OHD	OVERHEAD DOOR
OZ	OUNCE
PERF	PERFORATED
PERIM	PERIMETER
PERP	PERPINDICULAR
PNL	PANEL
PLAM	PLASTIC LAMINATE
PLUMB	PLUMBING
PLWD	PLYWOOD
PR	PROPOSAL REQUEST
PREFAB	PREFABRICATED
PT	PRESSURE TREATED
PNT	PAINT
PVC	POLYVINYL CHLORIDE
PVT	PRIVATE
PWR	POWER
RAD	RADIUS
REBAR	REINFORCING BAR
RECOM	RECOMMENDED
REF	REFERENCE
REFR	REFRIGERATOR
REG	REGULAR
REINF	REINFORCING
REM	REMOVE
REQ	REQUIRED
RFI	REQUEST FOR INFORMATION
RO	ROUGH OPENING
ROW	RIGHT OF WAY
RPM	REVOLUTIONS PER MINUTE
RWC	RAIN WATER CONDUCTOR
RWL	RAIN WATER LEADER
SAN	SANITARY
SCHED	SCHEDULE
SHR	SHOWER
SF	SQUARE FEET
SI	SUPPLEMENTAL INSTRUCTION
SIM	SIMILAR
SPEC	SPECIFICATION
SPK	SPEAKER
SS	STAINLESS STEEL
STL	STEEL
STRUCT	STRUCTURAL
SYS	SYSTEM
T&G	TONGUE AND GROOVE
TAN	TANGENT
TAS	TEXAS ACCESSIBILITY STANDARDS
TC	TOP OF CURB
TD	TRENCH DRAIN
TELE	TELEPHONE
TEMP	TEMPERATURE
TLT	TOILET
TO	TOP OF
TOC	TOP OF CONCRETE
TOS	TOP OF STEEL
TPO	THERMOPLASTIC POLYOLEFIN
TYP	TYPICAL
UNO	UNLESS NOTED OTHERWISE
VAC	VACUUM
VERT	VERTICAL
VEST	VESTIBULE
VIF	VERIFY IN FIELD
VWC	VINYL WALL COVERING
W/	WITH
W/O	WITHOUT
WC	WATER CLOSET
WD	WOOD
WDW	WINDOW
WF	WIDE FLANGE
WH	WATER HEATER
WO	WHERE OCCURS

SYMBOL LEGEND

1 / A101 — SECTION/BUILDING SECTION REFERENCE	1 / A101 — WALL SECTION REFERENCE
101 ROOM NAME — ROOM TAG NAME & NUMBER	
1 / A101 — SECTION DETAIL REFERENCE	101 — ROOM TAG NUMBER ONLY
1 / A101 — DETAIL REFERENCE	1408A — DOOR TAG
A101 / 1 — EXTERIOR ELEVATION	EQNUM — EQUIPMENT TAG
01/ A101 — INTERIOR ELEVATION	A1 — GLAZING TAG
A — WALL TAG	1t — WINDOW TAG
TITLE / ELEVATION — ELEVATION DATUM	0'-0" — SPOT ELEVATION
NORTH — TRUE NORTH ARROW	PLAN — PLAN NORTH ARROW

GENERAL NOTES

1. FIRST LEVEL FINISH FLOOR ELEVATION : 100'-0" = 310.00 (REF. CIVIL)
2. THE CONTRACTOR SHALL BE RESPONSIBLE FOR & OBTAIN ALL PERMITS & LICENSES, & PAY ANY REQUIRED FEES.
3. IN GENERAL, WORK UNDER THIS CONTRACT INCLUDES SITE WORK, DEMOLITION, FOUNDATIONS, STRUCT. WORK AS REQUIRED TO ENCLOSE THE BLDG. FLOOR SLABS, INTERIOR PARTITIONS, INTERIOR FINISHES, WALL SECTIONS, AQUATICS, MECHANICAL & ELECTRICAL WORK AS SPECIFIED & INDICATED ON THESE DOCUMENTS.
4. PRIOR TO COMMENCEMENT OF WORK, THE CONTRACTOR SHALL CONTACT ALL UTILITY COMPANIES HAVING JURISDICTION TO VERIFY LOCATION OF ALL EXISTING UTILITY LINES & ANY OTHER FEATURES UNIQUE TO THIS PROJECT.
5. DIMENSIONS: ALL PLAN DIMENSIONS ARE FROM FACE OF MASONRY OR FACE OF STUD, UNLESS NOTED OR SHOWN OTHERWISE.
6. NO EXPOSED STUDS WILL BE PERMITTED IN AREAS ACCESSIBLE TO THE PUBLIC REGARDLESS OF LOCATION.
7. ALL GYPSUM BOARD SHALL BE TAPED, BEDDED & SANDED & HAVE ALL HOLES & VOIDS SEALED, UNLESS NOTED OTHERWISE ON DRAWINGS.
8. CONDUIT IS NOT TO BE EXPOSED IN ANY PUBLIC SPACES TO THE EXTENT POSSIBLE. COORDINATE WIRING OF ALL DEVICES TO MOUNT FLUSH AGAINST WALLS. CONDUIT MAY RUN EXPOSED IN MECHANICAL SPACES & AT EXPOSED CEILINGS ONLY.
9. ALL PENETRATIONS OF PIPES, CONDUITS, DUCTS, VENTS, ETC. SHALL BE TIGHTLY SEALED TO PREVENT PASSAGE OF SMOKE & FIRE COMMENSURATE WITH THE RATING OF THE PARTITION (WALL).
10. MATERIAL OR FINISHES NOTED ON DRAWINGS ARE FOR GENERAL INFORMATION & TO FACILITATE INTERPRETATION OF THE DRAWINGS. THE CONTRACTOR SHALL FURNISH OTHER MATERIALS, ACCESSORIES & OR FINISHES AS REQUIRED TO COMPLETE WORK.
11. CONTRACTOR SHALL, IN THE WORK OF ALL TRADES, PERFORM ANY & ALL CUTTING, PATCHING, REPAIRING, RESTORING & THE LIKE NECESSARY TO COMPLETE THE WORK & TO RESTORE ANY DAMAGED OR AFFECTED SURFACES RESULTING FROM THE WORK OF THESE CONTRACTS TO A FINISHED CONDITION TO THE SATISFACTION OF THE ARCHITECT & OWNER.
12. ALL MATERIALS & FINISHES USED ON THIS PROJECT SHALL BE NEW & UNUSED.
13. CLG. HEIGHTS NOTED ON DRAWINGS ARE FROM FINISH FLOOR TO CLG. UNLESS NOTED OTHERWISE.
14. FOR SIZE & LOCATION OF ALL OPENINGS & FOR MECHANICAL, DUCTWORK & PLUMBING, SEE MECHANICAL & STRUCT. DRAWINGS.
15. WHERE FACTORY FINISHED OR FACTORY PRIMED ITEMS, SUCH AS GRILLES, DIFFUSERS, MTL. TRIM & ACCESSORIES OCCUR, THEY SHALL BE PAINTED TO MATCH THE ADJACENT SURFACE OR AS DIRECTED BY THE ARCHITECT.
16. CONTRACTOR SHALL VERIFY ALL EXISTING CONDITIONS & DIMENSIONS AT THE JOB SITE WHICH MAY AFFECT THIS WORK PRIOR TO STARTING THE WORK, & SHALL NOTIFY THE OWNER & ARCHITECT OF ANY DISCREPANCIES IMMEDIATELY UPON DISCOVERY.
17. PROVIDE BLOCKING OR GROUTED CMU CELLS BEHIND ALL SIGNS, FIXTURES, PARTITIONS, ACCESSORIES, ETC., & WHERE INDICATED OR REQUIRED TO INSURE PROPER & SECURE INSTALLATION OF SUCH ITEMS.
18. THESE DRAWINGS ARE THE SOLE PROPERTY OF BRINKLEY SARGENT WIGINTON ARCHITECTS, INC. THE USE OR RE-USE OF THESE DRAWINGS IS HEREBY RESTRICTED TO THE ORIGINAL SITE FOR WHICH THEY WERE PREPARED. REPRODUCTION OF THESE DRAWINGS, IN WHOLE OR IN PART, WITHOUT THE WRITTEN PERMISSION OF THE ARCHITECT IS HEREBY PROHIBITED. COPYRIGHT BRINKLEY SARGENT WIGINTON ARCHITECTS 2020.
19. THESE DRAWINGS CONTAIN PROPRIETARY INFORMATION AND INTELLECTUAL AND INDUSTRIAL COPYRIGHTS THAT ARE THE PROPERTY OF BRINKLEY SARGENT WIGINTON ARCHITECTS (BSW). NO COPIES SHALL BE MADE WITHOUT APPROVAL. THESE DRAWINGS SHALL NOT BE USED BY ANY OTHER PARTY FOR ANY OTHER PURPOSE OTHER THAN THE PURPOSE INTENDED WITHOUT THE EXPRESS WRITTEN CONSENT OF BRINKLEY SARGENT WIGINTON ARCHITECTS (BSW).

VICINITY MAP

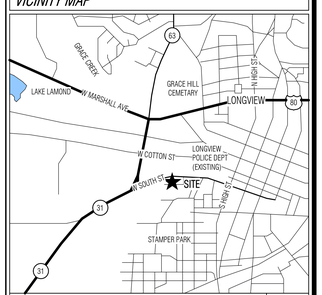

ADDRESS:
518 W. SOUTH ST.
LONGVIEW, TX 75601

N

PROJECT INFORMATION

LONGVIEW POLICE DEPARTMENT
518 W. SOUTH STREET
LONGVIEW, TEXAS 75601

THREE STORY BUILDING HOUSING OFFICES WITH SURFACE PARKING. THE EXTERIOR DESIGN OF THE BUILDING IS A MIXTURE OF BRICK, STONE AND METAL PANEL WITH ALUMINUM FRAMING AND E-COATED GLAZING.

ADOPTED BUILDING CODES*

2012 INTERNATIONAL BUILDING CODE (COMMERCIAL)
2012 INTERNATIONAL MECHANICAL CODE
2017 NATIONAL ELECTRICAL CODE
2012 INTERNATIONAL PLUMBING CODE
2012 INTERNATIONAL FIRE CODE
2015 INTERNATIONAL ENERGY CONSERVATION CODE
2012 INTERNATIONAL FUEL & GAS CODE
2012 TEXAS ACCESSIBILITY STANDARDS

* ALL CODES REQUIREMENTS TO INCLUDE LOCAL AMMENDMENTS

OCCUPANCY AND CONSTRUCTION TYPE

OCCUPANCY TYPE	A-3, B, S-2 & I-3
CONSTRUCTION TYPE	II-B

*REFERENCE CODE PLAN FOR ADDITIONAL INFORMATION

GROSS BUILDING AREA

LEVEL	AREA
LEVEL 1	31,289 SF
LEVEL 2	22,408 SF
LEVEL 3	17,284 SF
PENTHOUSE	322 SF
	71,303 SF

PROJECT CONTACTS

OWNER
CITY OF LONGVIEW
933 MOBILE DRIVE
LONGVIEW, TX 75604
903-237-1199 (T)

ARCHITECT
BRINKLEY SARGENT WIGINTON ARCHITECTS
5000 QUORUM DRIVE, SUITE 600
DALLAS, TX 75254
972-960-9970 (T)
972-960-9751 (F)

CIVIL
KSA ENGINEERS, INC.
140 E. TYLER ST. SUITE 600
LONGVIEW, TX 75601
903-236-7700 (T)

STRUCTURAL
L.A. FUESS PARTNERS
3333 LEE PARKWAY SUITE 300
DALLAS, TX 75219
214-593-1118 (T)

MEP / IT / AV
M-E ENGINEERS
1825 MARKET CENTER BLVD. SUITE 415
DALLAS, TX 75207
214-741-1589 (T)

LANDSCAPE
KENDALL LANDSCAPE ARCHITECTURE
6976 SANTA BARBARA DR.
DALLAS, TX 75214
214-739-3226 (T)

AREA MAP

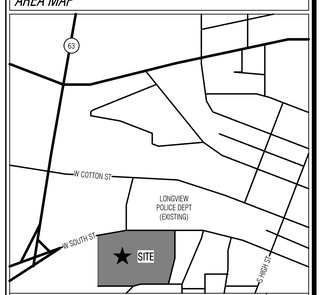

ADDRESS:
518 W. SOUTH ST.
LONGVIEW, TX 75601

N

LIST OF DRAWINGS

SHEET NO.	DRAWING TITLE	2020.08.19 BID ISSUE
*CVR		
CVR-1	COVER SHEET	•
CVR-2	SHEET LIST	•
CIVIL		
C-100	PROJECT LAYOUT PLAN	•
C-100A	EXISTING SITE PLAN WITH PROPERTY BOUNDARY	•
C-101	PAVING PLAN	•
C-102	STRIPING PLAN	•
C-103	GRADING PLAN	•
C-104	DIMENSIONAL LAYOUT I	•
C-105	DIMENSIONAL LAYOUT II	•
C-106	DIMENSIONAL LAYOUT III	•
C-107	JOINT LAYOUT PLAN	•
C-108	DRAINAGE PLAN	•
C-109	STORM SEWER MAIN 1 PLAN AND PROFILE	•
C-110	STORM SEWER MAIN 2 PLAN AND PROFILE	•
C-111	6" SANITARY SEWER PLAN AND PROFILE	•
C-112	8" WATERLINE PLAN AND PROFILE	•
C-113	EROSION CONTROL PLAN	•
C-114	FENCING AND GATE PLAN	•
C-115	MISCELLANEOUS DETAILS I	•
C-116	MISCELLANEOUS DETAILS II	•
C-117	MISCELLANEOUS DETAILS III	•
STRUCTURAL		
S101	GENERAL NOTES	•
S102	STATEMENT OF SPECIAL INSPECTIONS	•
S103	LOADING DIAGRAMS	•
S104	AXONOMETRIC VIEWS	•
S110	OVERALL SITE PLAN	•
S201	LEVEL CRAWL SPACE - OVERALL FOUNDATION PLAN	•
S202	LEVEL CRAWL SPACE - FOUNDATION PLAN (WEST)	•
S203	LEVEL CRAWL SPACE - FOUNDATION PLAN (EAST)	•
S210	LEVEL 1 - OVERALL FRAMING PLAN	•
S211	LEVEL 1 - FRAMING PLAN (WEST)	•
S212	LEVEL 1 - FRAMING PLAN (EAST)	•
S220	LEVEL 2 - OVERALL FRAMING PLAN	•
S221	LEVEL 2 - FRAMING PLAN (WEST)	•
S222	LEVEL 2 - FRAMING PLAN (EAST)	•
S230	LEVEL 3 - OVERALL FRAMING PLAN	•
S231	LEVEL 3 - FRAMING PLAN (WEST)	•
S232	LEVEL 3 - FRAMING PLAN (EAST)	•
S240	LEVEL ROOF - OVERALL FRAMING PLAN	•
S241	LEVEL ROOF - FRAMING PLAN (WEST)	•
S242	LEVEL ROOF - FRAMING PLAN (EAST)	•
S301	TYPICAL CONCRETE DETAILS	•
S302	CONCRETE DETAILS	•
S303	CONCRETE DETAILS	•
S304	CONCRETE DETAILS	•
S305	SITE DETAILS	•
S306	SITE DETAILS	•
S401	TYPICAL MASONRY DETAILS	•
S501	TYPICAL STEEL DETAILS	•
S502	TYPICAL STEEL DETAILS	•
S503	TYPICAL STEEL DETAILS	•
S504	STEEL DETAILS	•
S505	STEEL DETAILS	•
S506	STEEL DETAILS	•
S507	STEEL DETAILS	•
S508	STEEL DETAILS	•
S510	VERTICAL BRACE DETAILS	•
S511	VERTICAL BRACE ELEVATIONS	•
S520	TRELLIS ELEVATIONS	•
S521	TRELLIS SCREEN WALL & STAIR ELEVATION	•
ARCHITECTURAL		
A000	TEXAS ACCESSIBILITY STANDARDS (TAS)	•
A001	3D - AXONS	•
A021	CODE PLAN	•
A101	SITE PLAN	•
A102	SITE DETAILS AND FENCE ELEVATIONS	•
A103	SITE DETAILS AND ENLARGED PLANS	•
A104	SITE DETAILS	•
A105	SITE DETAILS	•
A201	LEVEL 1 - SLAB EDGE PLAN	•
A202	LEVEL 2 - SLAB EDGE PLAN	•
A203	LEVEL 3 - SLAB EDGE PLAN	•
A204	MUSLAB PLAN	•
A210	LEVEL 1 - REFERENCE PLAN	•
A211	LEVEL 1 - FLOOR PLAN (WEST) - WALL TAGS, DIMENSIONS	•
A212	LEVEL 1 - FLOOR PLAN (EAST) - WALL TAGS, DIMENSIONS	•
A213	LEVEL 1 - FLOOR PLAN (WEST) - EQUIPMENT, INTERIOR ELEVATIONS, DOOR TAGS	•
A214	LEVEL 1 - FLOOR PLAN (EAST) - EQUIPMENT, INTERIOR ELEVATIONS, DOOR TAGS	•
A220	LEVEL 2 - REFERENCE PLAN	•
A221	LEVEL 2 - FLOOR PLAN (WEST) - WALL TAGS, DIMENSIONS	•
A222	LEVEL 2 - FLOOR PLAN (EAST) - WALL TAGS, DIMENSIONS	•
A223	LEVEL 2 - FLOOR PLAN (WEST) - EQUIPMENT, INTERIOR ELEVATIONS, DOOR TAGS	•
A224	LEVEL 2 - FLOOR PLAN (EAST) - EQUIPMENT, INTERIOR ELEVATIONS, DOOR TAGS	•
A230	LEVEL 3 - REFERENCE PLAN	•
A231	LEVEL 3 - FLOOR PLAN (WEST) - WALL TAGS, DIMENSIONS	•
A232	LEVEL 3 - FLOOR PLAN (EAST) - WALL TAGS, DIMENSIONS	•
A233	LEVEL 3 - FLOOR PLAN (WEST) - EQUIPMENT, INTERIOR ELEVATIONS, DOOR TAGS	•
A234	LEVEL 3 - FLOOR PLAN (EAST) - EQUIPMENT, INTERIOR ELEVATIONS, DOOR TAGS	•
A270	ENLARGED FLOOR PLANS	•
A280	STAIRS / RAILINGS - ST-01 & LOBBY	•
A281	STAIRS / RAILINGS - ST-01, CID OVERLOOK & DETAILS	•
A282	STAIRS / RAILINGS - ST-02	•
A283	STAIRS / RAILINGS - ST-02	•
A284	STAIRS / RAILINGS - ST-03 & DETAILS	•
A285	STAIRS / RAILINGS - ST-03 & DETAILS	•
A290	ROOF PLAN	•
A291	ROOF DETAILS	•
A292	ROOF DETAILS	•
A311	LEVEL 1 - REFLECTED CEILING PLAN (WEST)	•
A312	LEVEL 1 - REFLECTED CEILING PLAN (EAST)	•
A321	LEVEL 2 - REFLECTED CEILING PLAN (WEST)	•
A322	LEVEL 2 - REFLECTED CEILING PLAN (EAST)	•
A331	LEVEL 3 - REFLECTED CEILING PLAN (WEST)	•
A332	LEVEL 3 - REFLECTED CEILING PLAN (EAST)	•
A341	CEILING DETAILS	•

LIST OF DRAWINGS

SHEET NO.	DRAWING TITLE	2020.08.19 BID ISSUE
A342	CEILING DETAILS	•
A401	BUILDING ELEVATIONS	•
A402	BUILDING ELEVATIONS	•
A403	BUILDING ELEVATIONS	•
A411	3D - PUBLIC LOBBY & NW CORNER TRELLIS - EXPLODED AXONOMETRIC	•
A412	3D - BUILDING & STAFF STAIR - EXPLODED AXONOMETRIC	•
A413	3D - CID OVERLOOK - EXPLODED AXONOMETRIC	•
A501	BUILDING SECTIONS	•
A502	BUILDING SECTIONS	•
A503	BUILDING SECTIONS	•
A504	BUILDING SECTIONS	•
A511	WALL SECTIONS	•
A512	WALL SECTIONS	•
A513	WALL SECTIONS	•
A514	WALL SECTIONS	•
A515	WALL SECTIONS	•
A516	WALL SECTIONS	•
A517	WALL SECTIONS - ELEVATORS	•
A521	SECTION DETAILS	•
A523	SECTION DETAILS	•
A524	SECTION DETAILS	•
A601	PLAN DETAILS	•
A602	PLAN DETAILS	•
A701	PARTITION TYPES	•
A702	DOOR SCHEDULE AND DOOR TYPES	•
A703	DOOR DETAILS	•
A704	DOOR DETAILS - EXTERIOR	•
A711	EQUIPMENT SCHEDULE	•
A801	LEVEL 1 - FINISH SCHEDULE, NOTES & LEGEND	•
A802	LEVEL 2 - FINISH SCHEDULE, NOTES & LEGEND	•
A803	LEVEL 3 & PENTHOUSE - FINISH SCHEDULE, NOTES & LEGEND	•
A811	LEVEL 1 - FINISH PLAN	•
A821	LEVEL 2 - FINISH PLAN	•
A831	LEVEL 3 - FINISH PLAN	•
A841	FINISH ELEVATIONS	•
A842	FINISH DETAILS, ENLARGED PLANS & ELEVATIONS	•
A901	INT. ELEVATIONS	•
A902	INT. ELEVATIONS	•
A903	INT. ELEVATIONS	•
A904	INT. ELEVATIONS	•
A905	INT. ELEVATIONS	•
A906	INT. ELEVATIONS	•
A907	INT. ELEVATIONS	•
A908	INT. ELEVATIONS	•
A909	INT. ELEVATIONS	•
A910	INT. ELEVATIONS	•
A911	INT. ELEVATIONS	•
A912	INT. ELEVATIONS	•
A921	MILLWORK SECTIONS	•
A922	MILLWORK SECTIONS	•
A923	MILLWORK SECTIONS	•
A924	MILLWORK SECTIONS	•
A925	MILLWORK SECTIONS	•
MECHANICAL		
M001	MECHANICAL LEGEND	•
M002	MECHANICAL GENERAL NOTES	•
M003	MECHANICAL SCHEDULES	•
M004	MECHANICAL SCHEDULES	•
M005	MECHANICAL SCHEDULES	•
M006	MECHANICAL SCHEDULES	•
M200	CRAWL SPACE - MECHANICAL PLAN	•
M210	LEVEL 1 - MECHANICAL OVERALL PLAN	•
M211	LEVEL 1 - MECHANICAL PLAN - WEST	•
M212	LEVEL 1 - MECHANICAL PLAN - EAST	•
M220	LEVEL 2 - MECHANICAL OVERALL PLAN	•
M221	LEVEL 2 - MECHANICAL PLAN - WEST	•
M222	LEVEL 2 - MECHANICAL PLAN - EAST	•
M230	LEVEL 3 - MECHANICAL OVERALL PLAN	•
M231	LEVEL 3 - MECHANICAL PLAN - WEST	•
M232	LEVEL 3 - MECHANICAL PLAN - EAST	•
M240	ROOF - MECHANICAL OVERALL PLAN	•
M241	ROOF - MECHANICAL PLAN - WEST	•
M242	ROOF - MECHANICAL PLAN - EAST	•
M311	LEVEL 1 - MECHANICAL PLAN RETURN - WEST	•
M312	LEVEL 1 - MECHANICAL PLAN RETURN - EAST	•
M321	LEVEL 2 - MECHANICAL PLAN RETURN - WEST	•
M322	LEVEL 2 - MECHANICAL PLAN RETURN - EAST	•
M331	LEVEL 3 - MECHANICAL PLAN RETURN - WEST	•
M332	LEVEL 3 - MECHANICAL PLAN RETURN - EAST	•
M401	MECHANICAL CONTROLS	•
M402	MECHANICAL CONTROLS	•
M501	MECHANICAL DETAILS	•
M502	MECHANICAL DETAILS	•
M503	MECHANICAL DETAILS	•
ELECTRICAL		
E001	ELECTRICAL LEGEND AND NOTES	•
E002	ELECTRICAL ONE-LINE	•
E004	ELECTRICAL SCHEDULES	•
E005	ELECTRICAL SCHEDULES	•
E006	ELECTRICAL SCHEDULES	•
E007	ELECTRICAL SCHEDULES	•
E008	ELECTRICAL SCHEDULES	•
E040	LIGHTING SCHEDULES	•
E041	LIGHTING CONTROLS	•
E101	SITE ELECTRICAL PLAN	•
E102	SITE ELECTRICAL ENLARGED PLAN	•
E210	LEVEL 1 - ELECTRICAL OVERALL PLAN	•
E211	LEVEL 1 - ELECTRICAL PLAN - WEST	•
E212	LEVEL 1 - ELECTRICAL PLAN - EAST	•
E220	LEVEL 2 - ELECTRICAL OVERALL PLAN	•
E221	LEVEL 2 - ELECTRICAL PLAN - WEST	•
E222	LEVEL 2 - ELECTRICAL PLAN - EAST	•
E230	LEVEL 3 - ELECTRICAL OVERALL PLAN	•
E231	LEVEL 3 - ELECTRICAL PLAN - WEST	•
E232	LEVEL 3 - ELECTRICAL PLAN - EAST	•
E310	LEVEL 1 - MECH. POWER OVERALL PLAN	•
E320	LEVEL 2 - MECH. POWER OVERALL PLAN	•
E330	LEVEL 3 - MECH. POWER OVERALL PLAN	•
E340	ROOF - MECH. POWER OVERALL PLAN	•

LIST OF DRAWINGS

SHEET NO.	DRAWING TITLE	2020.08.19 BID ISSUE
E350	CRAWL SPACE - ELECTRICAL OVERALL PLAN	•
E411	LEVEL 1 - REFLECTED CEILING PLAN - WEST	•
E412	LEVEL 1 - REFLECTED CEILING PLAN - EAST	•
E421	LEVEL 2 - REFLECTED CEILING PLAN - WEST	•
E422	LEVEL 2 - REFLECTED CEILING PLAN - EAST	•
E431	LEVEL 3 - REFLECTED CEILING PLAN - WEST	•
E432	LEVEL 3 - REFLECTED CEILING PLAN - EAST	•
E440	LIGHTING SECTIONS	•
E501	ELECTRICAL ENLARGED PLAN	•
E502	ELECTRICAL ENLARGED PLAN	•
E503	ELECTRICAL ENLARGED PLAN	•
E601	ELECTRICAL DETAILS	•
E602	ELECTRICAL DETAILS	•
E603	ELECTRICAL DETAILS	•
E710	LEVEL 1 - FIRE ALARM PLAN	•
E720	LEVEL 2 - FIRE ALARM PLAN	•
E730	LEVEL 3 - FIRE ALARM PLAN	•
E800	SITE PHOTOMETRICS	•
PLUMBING		
P001	PLUMBING LEGEND AND NOTES	•
P002	PLUMBING SCHEDULES	•
P003	PLUMBING SCHEDULES	•
P101	PLUMBING SITE PLAN	•
P200	LEVEL 1 - CRAWL SPACE UNDERSLAB PLUMBING PLAN	•
P210	LEVEL 1 - PLUMBING OVERALL PLAN	•
P210U	LEVEL 1 - CRAWL SPACE OVERALL PLUMBING PLAN	•
P211	LEVEL 1 - PLUMBING PLAN - WEST	•
P211U	LEVEL 1 - CRAWL SPACE PLUMBING PLAN - WEST	•
P212	LEVEL 1 - PLUMBING PLAN - EAST	•
P212U	LEVEL 1 - CRAWL SPACE PLUMBING PLAN - EAST	•
P220	LEVEL 2 - PLUMBING OVERALL PLAN	•
P221	LEVEL 2 - PLUMBING PLAN - WEST	•
P222	LEVEL 2 - PLUMBING PLAN - EAST	•
P230	LEVEL 3 - PLUMBING OVERALL PLAN	•
P231	LEVEL 3 - PLUMBING PLAN - WEST	•
P232	LEVEL 3 - PLUMBING PLAN - EAST	•
P240	ROOF - PLUMBING OVERALL PLAN	•
P241	ROOF - PLUMBING PLAN - WEST	•
P242	ROOF - PLUMBING PLAN - EAST	•
P301	LEVEL 1 - PLUMBING ENLARGED PLANS	•
P302	LEVEL 1 - PLUMBING ENLARGED PLANS	•
P303	LEVEL 2 - PLUMBING ENLARGED PLANS	•
P304	LEVEL 3 - PLUMBING ENLARGED PLANS	•
P401	SANITARY ISOMETRICS	•
P402	SANITARY ISOMETRICS	•
P403	SANITARY ISOMETRICS	•
P404	SANITARY ISOMETRICS	•
P405	BUILDING GAS ISOMETRICS	•
P501	PLUMBING DETAILS	•
P502	PLUMBING DETAILS	•
TECHNOLOGY		
T001	TECHNOLOGY LEGEND AND NOTES	•
T002	TECHNOLOGY LEGEND AND NOTES	•
T003	TECHNOLOGY SCHEDULES	•
T005	TECHNOLOGY ONE-LINE	•
T101	SITE TECHNOLOGY PLAN	•
T210	LEVEL 1 - OVERALL TECHNOLOGY PLAN	•
T211	LEVEL 1 - TECHNOLOGY PLAN - WEST	•
T212	LEVEL 1 - TECHNOLOGY PLAN - EAST	•
T220	LEVEL 2 - OVERALL TECHNOLOGY PLAN	•
T221	LEVEL 2 - TECHNOLOGY PLAN - WEST	•
T222	LEVEL 2 - TECHNOLOGY PLAN - EAST	•
T230	LEVEL 3 - OVERALL TECHNOLOGY PLAN	•
T231	LEVEL 3 - TECHNOLOGY PLAN - WEST	•
T232	LEVEL 3 - TECHNOLOGY PLAN - EAST	•
T400	TECHNOLOGY ENLARGED PLANS	•
T401	TECHNOLOGY ENLARGED PLANS	•
T501	TECHNOLOGY DETAILS	•
T502	TECHNOLOGY DETAILS	•
T503	TECHNOLOGY DETAILS	•
T504	TECHNOLOGY DETAILS	•
AV		
AV001	AV LEGEND AND NOTES	•
AV003	AV SCHEDULES	•
AV004	AV ONE-LINES	•
AV005	AV ONE-LINES	•
AV006	AV ONE-LINES	•
AV007	AV ONE-LINES	•
AV008	AV ONE-LINES	•
AV009	AV ONE-LINES	•
AV210	LEVEL 1 - OVERALL AV PLAN	•
AV211	LEVEL 1 - AV PLAN - WEST	•
AV212	LEVEL 1 - AV PLAN - EAST	•
AV220	LEVEL 2 - OVERALL AV PLAN	•
AV221	LEVEL 2 - AV PLAN - WEST	•
AV222	LEVEL 2 - AV PLAN - EAST	•
AV230	LEVEL 3 - OVERALL AV PLAN	•
AV231	LEVEL 3 - AV PLAN - WEST	•
AV232	LEVEL 3 - AV PLAN - EAST	•
AV401	AV ENLARGED PLAN	•
AV402	AV ENLARGED PLAN	•
AV403	AV ENLARGED PLAN	•
AV404	AV ENLARGED PLAN	•
AV502	AV DETAILS	•
FIRE PROTECTION		
FP001	FIRE PROTECTION LEGEND AND NOTES	•
FP210	LEVE

© 2019 Brinkley Sargent Wigginton Architects, Inc.

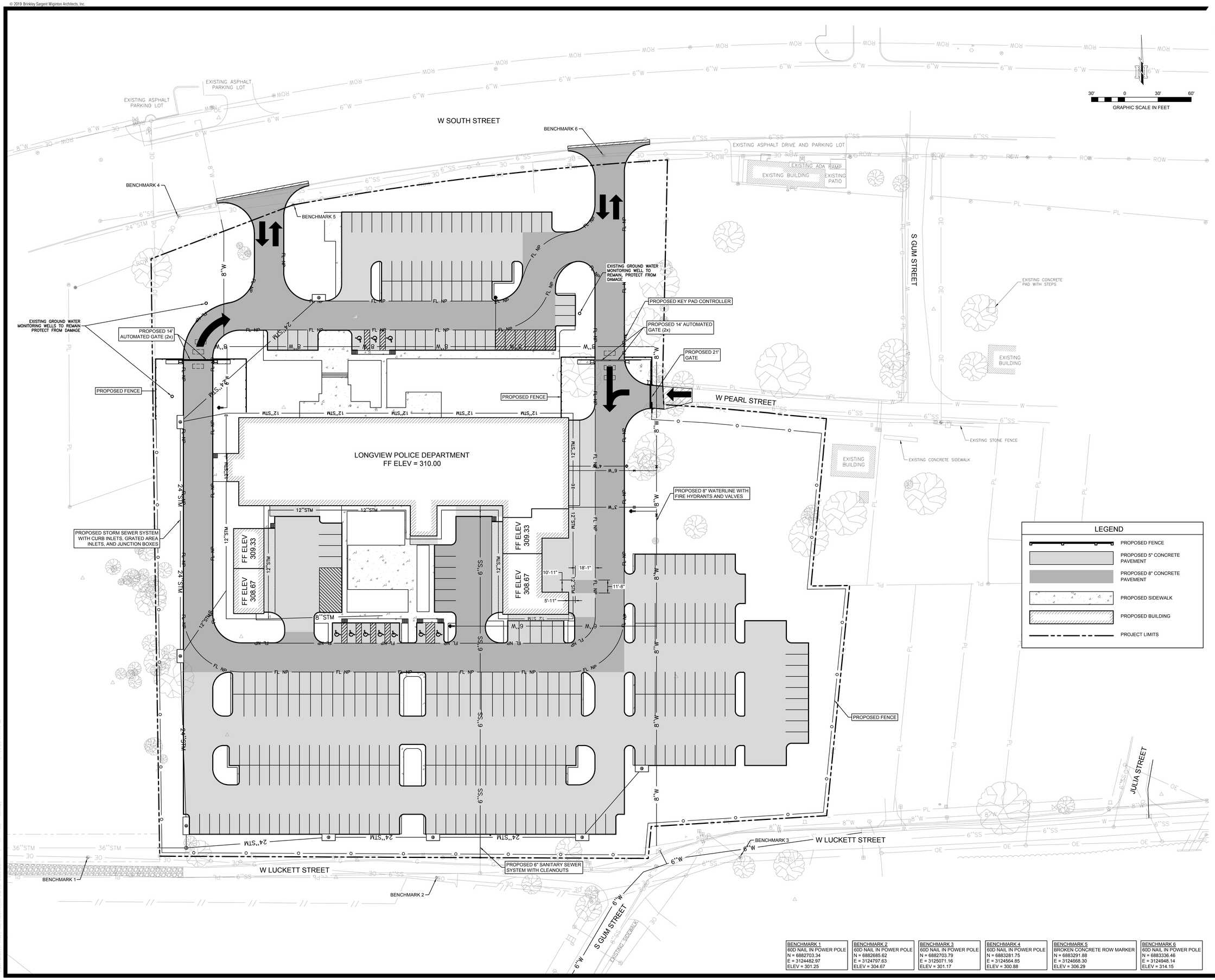

BENCHMARK 1	BENCHMARK 2	BENCHMARK 3	BENCHMARK 4	BENCHMARK 5	BENCHMARK 6
60D NAIL IN POWER POLE	60D NAIL IN POWER POLE	60D NAIL IN POWER POLE	60D NAIL IN POWER POLE	BROKEN CONCRETE ROW MARKER	60D NAIL IN POWER POLE
N = 6882703.34	N = 6882685.62	N = 6882703.79	N = 6883281.75	N = 6883291.88	N = 6883336.46
E = 3124482.97	E = 3124797.63	E = 3125071.16	E = 3124564.85	E = 3124668.30	E = 3124948.14
ELEV = 301.25	ELEV = 304.67	ELEV = 301.17	ELEV = 300.88	ELEV = 306.29	ELEV = 314.15

Architect: Brinkley Sargent Wigginton Architects (972) 960-9970
Landscape: Kendall Landscape Architecture (214) 739-3226
Structural: L.A. Fuess Partners, Inc (214) 593-1118
MEP: M-E Engineers (214) 741-1589
Civil: KSA Engineers, Inc (903) 236-7700
Technology: M-E Engineers (303) 421-6656

BRINKLEY SARGENT WIGINTON ARCHITECTS

LONGVIEW POLICE DEPARTMENT

518 W SOUTH ST. LONGVIEW, TEXAS 75601

HISTORY		
#	DATE	DESCRIPTION

STATE OF TEXAS
MICHAEL A. BURNS
59990
LICENSED
PROFESSIONAL ENGINEER
SEAL
TBPE Firm Registration No. F-1356

PROJECT LAYOUT PLAN

21719
06/04/2020
C-100

BID ISSUE

© 2019 Brinkley Sargent Wigginton Architects, Inc.

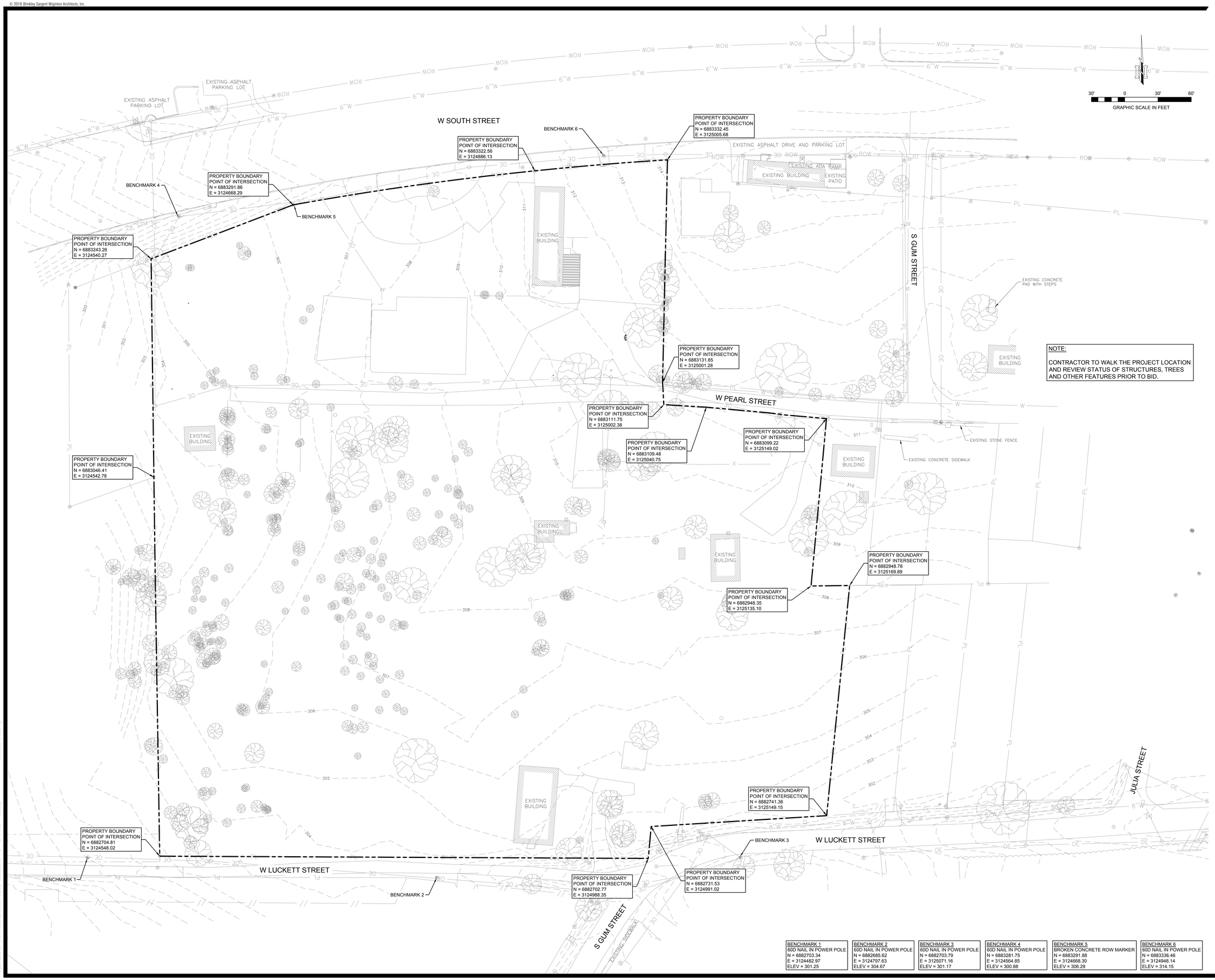

NOTE:

CONTRACTOR TO WALK THE PROJECT LOCATION AND REVIEW STATUS OF STRUCTURES, TREES AND OTHER FEATURES PRIOR TO BID.

BENCHMARK 1	BENCHMARK 2	BENCHMARK 3	BENCHMARK 4	BENCHMARK 5	BENCHMARK 6
60D NAIL IN POWER POLE	60D NAIL IN POWER POLE	60D NAIL IN POWER POLE	60D NAIL IN POWER POLE	BROKEN CONCRETE ROW MARKER	60D NAIL IN POWER POLE
N = 6882703.34	N = 6882685.62	N = 6882703.79	N = 6883281.75	N = 6883291.88	N = 6883336.46
E = 3124482.97	E = 3124797.63	E = 3125071.16	E = 3124564.85	E = 3124668.30	E = 3124948.14
ELEV = 301.25	ELEV = 304.67	ELEV = 301.17	ELEV = 300.88	ELEV = 306.29	ELEV = 314.15

BRINKLEY SARGENT WIGINTON ARCHITECTS

Architect: Brinkley Sargent Wigginton Architects (972) 960-9970
Landscape: Kendall Landscape Architecture (214) 739-3226
Structural: L.A. Fuess Partners, Inc (214) 593-1118
MEP: M-E Engineers (214) 741-1589
Civil: KSA Engineers, Inc (903) 236-7700
Technology: M-E Engineers (303) 421-6656

LONGVIEW POLICE DEPARTMENT

518 W SOUTH ST. LONGVIEW, TEXAS 75601

HISTORY		
#	DATE	DESCRIPTION

STATE OF TEXAS
MICHAEL A. BURNS
59990
LICENSED
PROFESSIONAL ENGINEER

SEAL 08/19/2020
TBPE Firm Registration No. F-13356

EXISTING SITE PLAN WITH PROPERTY BOUNDARY

21719
08/19/2020

C-100A

BID ISSUE

© 2019 Brinkley Sargent Wigginton Architects, Inc.

!!! CAUTION !!!
EXISTING OVERHEAD UTILITIES IN VICINITY CONTRACTOR SHALL EXERCISE EXTREME CAUTION WHEN WORKING NEAR ELECTRIC FACILITIES

!!! WARNING !!!
THE ENGINEER ASSUMES NO RESPONSIBILITY FOR THE ACCURACY OF THE LOCATION OF UNDERGROUND UTILITIES. THE CONTRACTOR SHALL BE RESPONSIBLE FOR LOCATION AND AVOIDING ALL EXISTING UTILITIES BY CALLING THE "ONE CALL" LOCATOR SERVICE AT 1.800.344.8377 (DIG TESS) OR 1.800.245.4545 TEXAS ONE CALL AT LEAST 48 HOURS PRIOR TO CONSTRUCTION.

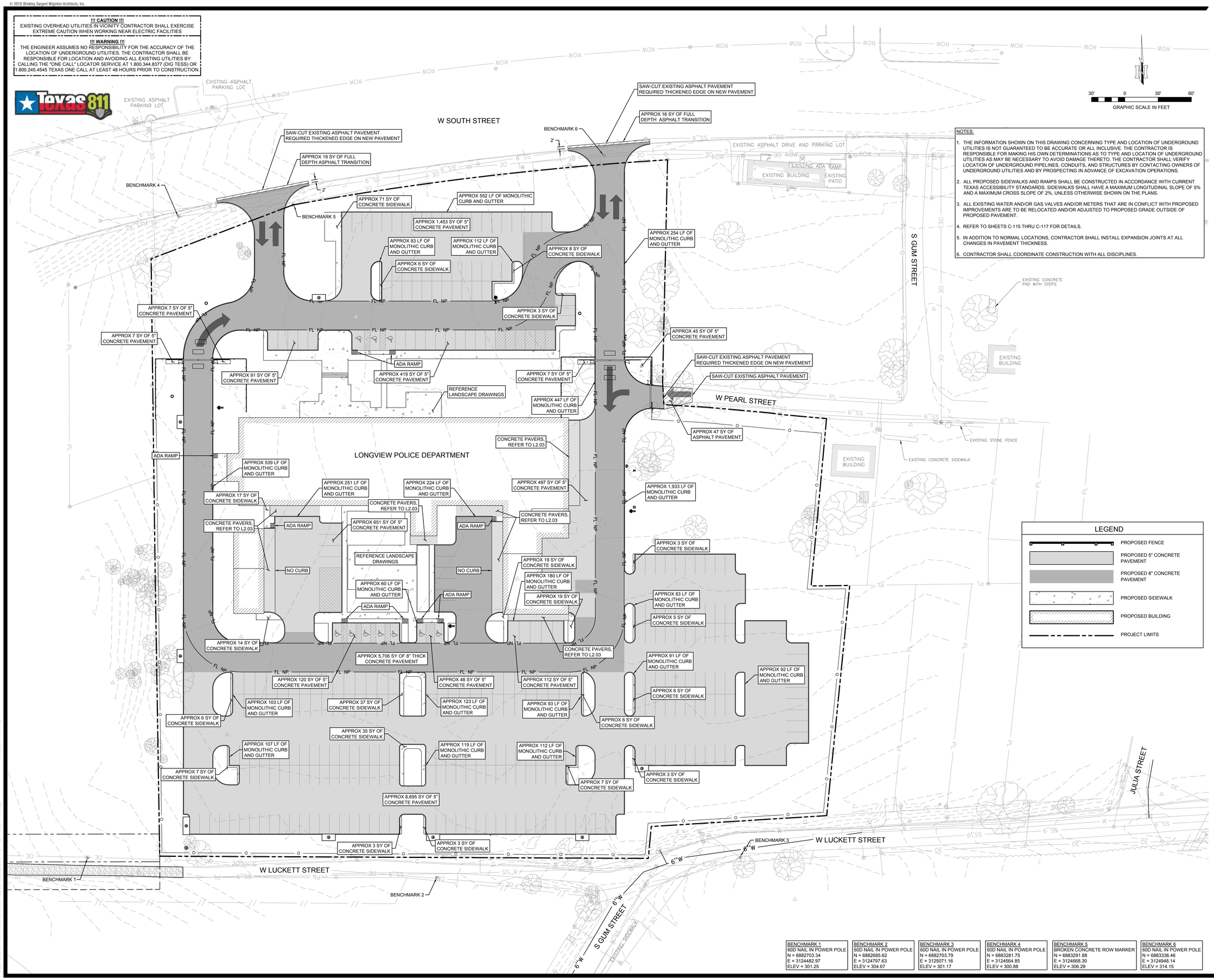

NOTES:

1. THE INFORMATION SHOWN ON THIS DRAWING CONCERNING TYPE AND LOCATION OF UNDERGROUND UTILITIES IS NOT GUARANTEED TO BE ACCURATE OR ALL INCLUSIVE. THE CONTRACTOR IS RESPONSIBLE FOR MAKING HIS OWN DETERMINATIONS AS TO TYPE AND LOCATION OF UNDERGROUND UTILITIES AS MAY BE NECESSARY TO AVOID DAMAGE THERETO. THE CONTRACTOR SHALL VERIFY LOCATION OF UNDERGROUND PIPELINES, CONDUITS, AND STRUCTURES BY CONTACTING OWNERS OF UNDERGROUND UTILITIES AND BY PROSPECTING IN ADVANCE OF EXCAVATION OPERATIONS.
2. ALL PROPOSED SIDEWALKS AND RAMPS SHALL BE CONSTRUCTED IN ACCORDANCE WITH CURRENT TEXAS ACCESSIBILITY STANDARDS. SIDEWALKS SHALL HAVE A MAXIMUM LONGITUDINAL SLOPE OF 5% AND A MAXIMUM CROSS SLOPE OF 2%, UNLESS OTHERWISE SHOWN ON THE PLANS.
3. ALL EXISTING WATER AND/OR GAS VALVES AND/OR METERS THAT ARE IN CONFLICT WITH PROPOSED IMPROVEMENTS ARE TO BE RELOCATED AND/OR ADJUSTED TO PROPOSED GRADE OUTSIDE OF PROPOSED PAVEMENT.
4. REFER TO SHEETS C-115 THRU C-117 FOR DETAILS.
5. IN ADDITION TO NORMAL LOCATIONS, CONTRACTOR SHALL INSTALL EXPANSION JOINTS AT ALL CHANGES IN PAVEMENT THICKNESS.
6. CONTRACTOR SHALL COORDINATE CONSTRUCTION WITH ALL DISCIPLINES.

LEGEND

- PROPOSED FENCE
- PROPOSED 5" CONCRETE PAVEMENT
- PROPOSED 8" CONCRETE PAVEMENT
- PROPOSED SIDEWALK
- PROPOSED BUILDING
- PROJECT LIMITS

BENCHMARK 1	BENCHMARK 2	BENCHMARK 3	BENCHMARK 4	BENCHMARK 5	BENCHMARK 6
60D NAIL IN POWER POLE	60D NAIL IN POWER POLE	60D NAIL IN POWER POLE	60D NAIL IN POWER POLE	BROKEN CONCRETE ROW MARKER	60D NAIL IN POWER POLE
N = 6882703.34	N = 6882685.62	N = 6882703.79	N = 6883281.75	N = 6883291.88	N = 6883336.46
E = 3124482.97	E = 3124797.63	E = 3125071.16	E = 3124564.85	E = 3124668.30	E = 3124948.14
ELEV = 301.25	ELEV = 304.67	ELEV = 301.17	ELEV = 300.88	ELEV = 306.29	ELEV = 314.15

Architect: Brinkley Sargent Wigginton Architects (972) 960-9970
Landscape: Kendall Landscape Architecture (214) 739-3226
Structural: L.A. Fuess Partners, Inc (214) 593-1118
MEP: M-E Engineers (214) 741-1589
Civil: KSA Engineers, Inc (903) 236-7700
Technology: M-E Engineers (303) 421-6656

BRINKLEY SARGENT WIGINTON ARCHITECTS

LONGVIEW POLICE DEPARTMENT

518 W SOUTH ST. LONGVIEW, TEXAS 75601

HISTORY

#	DATE	DESCRIPTION

STATE OF TEXAS
MICHAEL A. BURNS
59990
06/04/2020
SEAL
TBPE Firm Registration No. F-1356

PAVING PLAN

BID ISSUE

21719
06/04/2020
C-101

© 2019 Brinkley Sargent Wigginton Architects, Inc.

!!! CAUTION !!!
EXISTING OVERHEAD UTILITIES IN VICINITY CONTRACTOR SHALL EXERCISE EXTREME CAUTION WHEN WORKING NEAR ELECTRIC FACILITIES

!!! WARNING !!!
THE ENGINEER ASSUMES NO RESPONSIBILITY FOR THE ACCURACY OF THE LOCATION OF UNDERGROUND UTILITIES. THE CONTRACTOR SHALL BE RESPONSIBLE FOR LOCATION AND AVOIDING ALL EXISTING UTILITIES BY CALLING THE "ONE CALL" LOCATOR SERVICE AT 1.800.344.8377 (DIG TESS) OR 1.800.245.4545 TEXAS ONE CALL AT LEAST 48 HOURS PRIOR TO CONSTRUCTION.

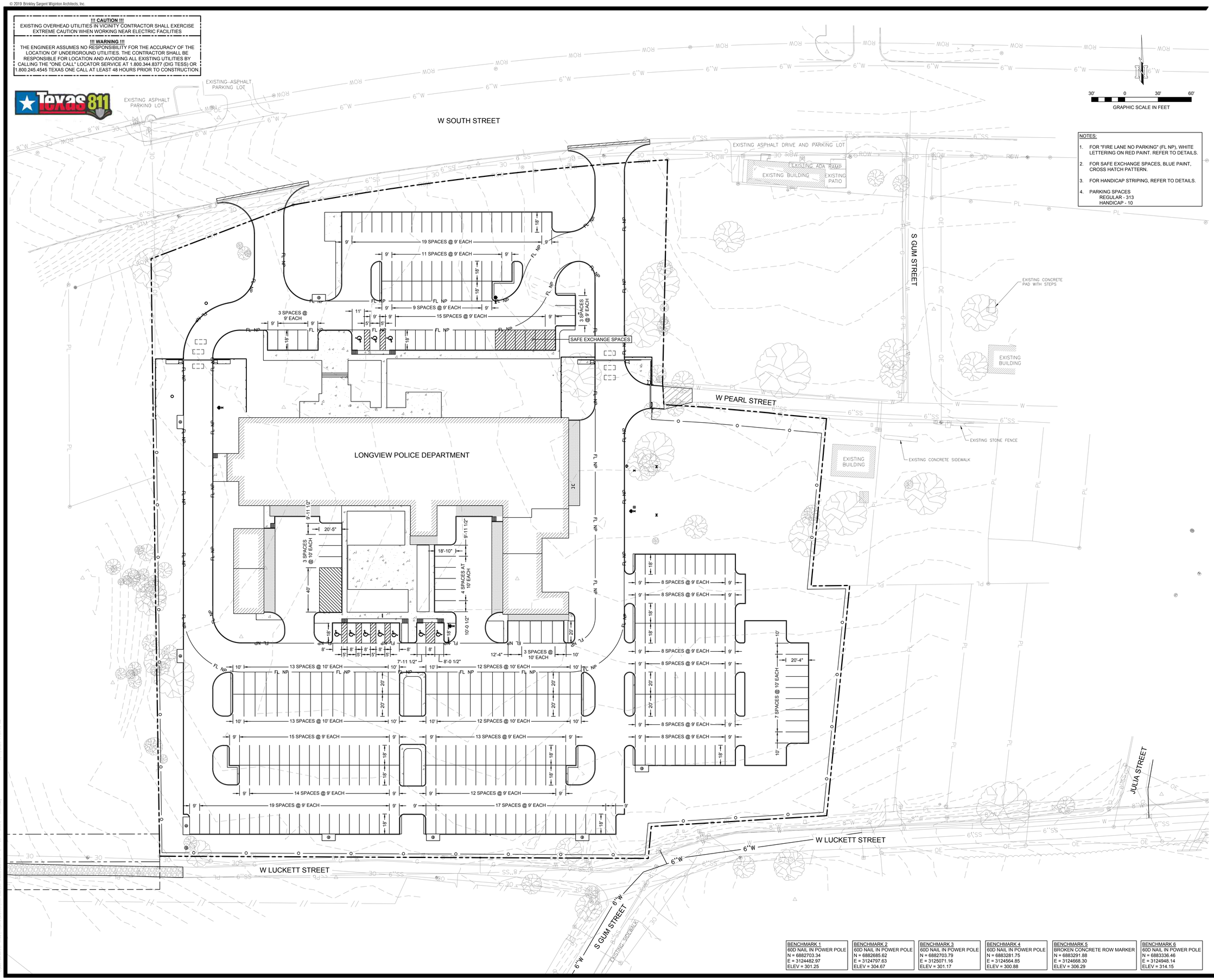

NOTES:

1. FOR "FIRE LANE NO PARKING" (FL NP), WHITE LETTERING ON RED PAINT. REFER TO DETAILS.
2. FOR SAFE EXCHANGE SPACES, BLUE PAINT, CROSS HATCH PATTERN.
3. FOR HANDICAP STRIPING, REFER TO DETAILS.
4. PARKING SPACES
   REGULAR - 313
   HANDICAP - 10

BENCHMARK 1	BENCHMARK 2	BENCHMARK 3	BENCHMARK 4	BENCHMARK 5	BENCHMARK 6
60D NAIL IN POWER POLE	60D NAIL IN POWER POLE	60D NAIL IN POWER POLE	60D NAIL IN POWER POLE	BROKEN CONCRETE ROW MARKER	60D NAIL IN POWER POLE
N = 6882703.34	N = 6882685.62	N = 6882703.79	N = 6883281.75	N = 6883291.88	N = 6883336.46
E = 3124482.97	E = 3124797.63	E = 3125071.16	E = 3124564.85	E = 3124668.30	E = 3124948.14
ELEV = 301.25	ELEV = 304.67	ELEV = 301.17	ELEV = 300.88	ELEV = 306.29	ELEV = 314.15

Architect: Brinkley Sargent Wigginton Architects (972) 960-9970
Landscape: Kendall Landscape Architecture (214) 739-3226
Structural: L.A. Fuess Partners, Inc (214) 593-1118
MEP: M-E Engineers (214) 741-1589
Civil: KSA Engineers, Inc (903) 236-7700
Technology: M-E Engineers (303) 421-6656

BRINKLEY SARGENT WIGINTON ARCHITECTS

LONGVIEW POLICE DEPARTMENT

518 W SOUTH ST. LONGVIEW, TEXAS 75601

HISTORY		
#	DATE	DESCRIPTION

STATE OF TEXAS
MICHAEL J. BURNS
59990
LICENSED PROFESSIONAL ENGINEER

SEAL 06/04/2020
TBPE Firm Registration No. F-1356

STRIPING PLAN

21719
06/04/2020
C-102

BID ISSUE

© 2019 Brinkley Sargent Wigington Architects, Inc.

!!! CAUTION !!!
EXISTING OVERHEAD UTILITIES IN VICINITY CONTRACTOR SHALL EXERCISE EXTREME CAUTION WHEN WORKING NEAR ELECTRIC FACILITIES

!!! WARNING !!!
THE ENGINEER ASSUMES NO RESPONSIBILITY FOR THE ACCURACY OF THE LOCATION OF UNDERGROUND UTILITIES. THE CONTRACTOR SHALL BE RESPONSIBLE FOR LOCATION AND AVOIDING ALL EXISTING UTILITIES BY CALLING THE "ONE CALL" LOCATOR SERVICE AT 1.800.344.8377 (DIGTESS) OR 1.800.245.4545 TEXAS ONE CALL AT LEAST 48 HOURS PRIOR TO CONSTRUCTION

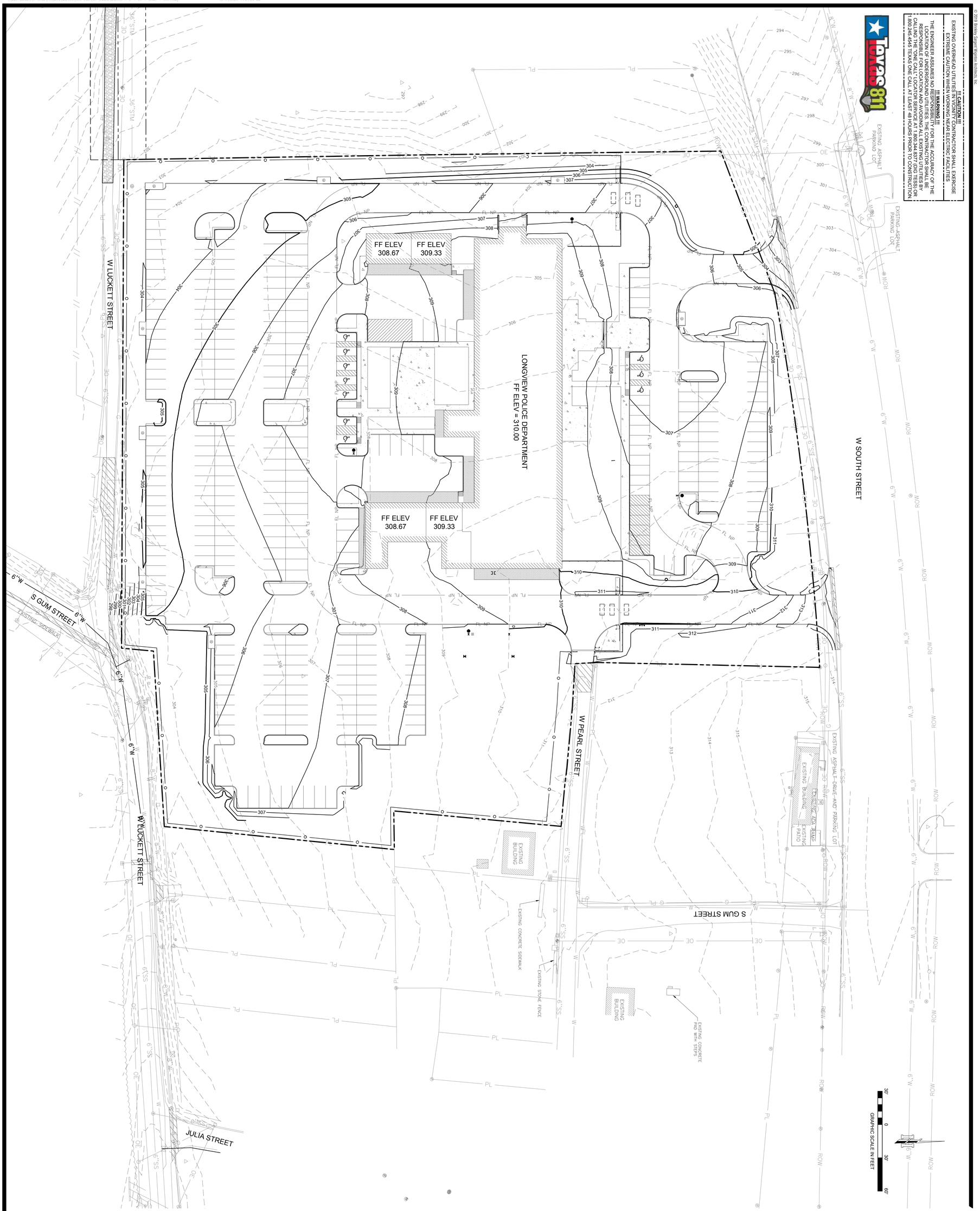

LONGVIEW POLICE DEPARTMENT

518 W SOUTH ST. LONGVIEW, TEXAS 75601

Architect:	Brinkley Sargent Wiginton Architects	(972) 960-9970
Landscape:	Kendall Landscape Architecture	(214) 739-3226
Structural:	L.A. Fuess Partners, Inc	(214) 593-1118
MEP:	M-E Engineers	(214) 741-1589
Civil:	KSA Engineers, Inc	(903) 236-7700
Technology:	M-E Engineers	(303) 421-6656

#	DATE	DESCRIPTION

HISTORY

GRADING PLAN

21719
08/04/2020
C-103

BID ISSUE

BRINKLEY SARGENT WIGINTON ARCHITECTS

© 2019 Brinkley Sargent Wigginton Architects, Inc.

!!! CAUTION !!!
EXISTING OVERHEAD UTILITIES IN VICINITY CONTRACTOR SHALL EXERCISE EXTREME CAUTION WHEN WORKING NEAR ELECTRIC FACILITIES

!!! WARNING !!!
THE ENGINEER ASSUMES NO RESPONSIBILITY FOR THE ACCURACY OF THE LOCATION OF UNDERGROUND UTILITIES. THE CONTRACTOR SHALL BE RESPONSIBLE FOR LOCATION AND AVOIDING ALL EXISTING UTILITIES BY CALLING THE "ONE CALL" LOCATOR SERVICE AT 1.800.344.8377 (DIG TESS) OR 1.800.245.4545 TEXAS ONE CALL AT LEAST 48 HOURS PRIOR TO CONSTRUCTION.

Texas811

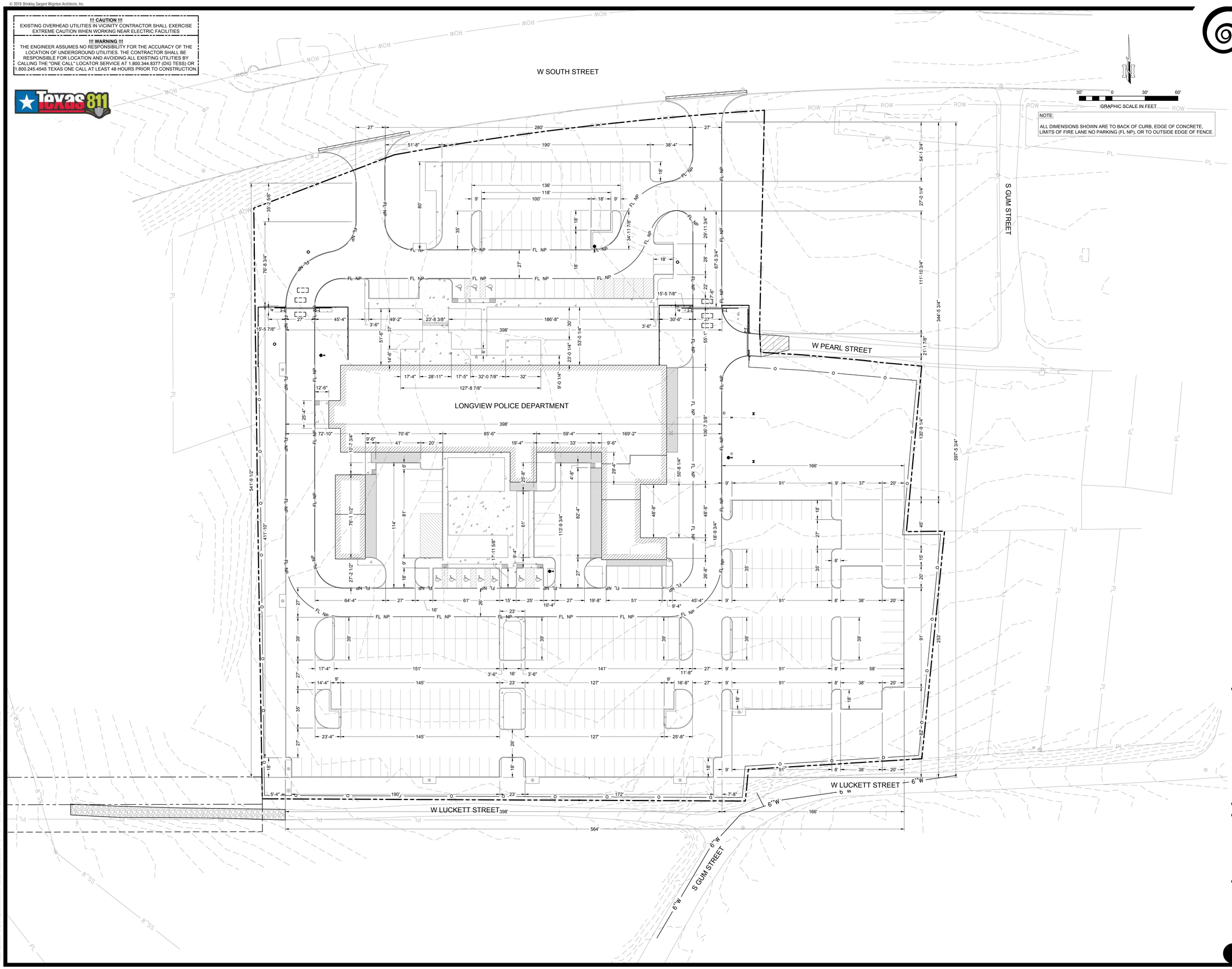

NOTE:
ALL DIMENSIONS SHOWN ARE TO BACK OF CURB, EDGE OF CONCRETE, LIMITS OF FIRE LANE NO PARKING (FL NP), OR TO OUTSIDE EDGE OF FENCE.

Architect: Brinkley Sargent Wigginton Architects (972) 960-9970
Landscape: Kendall Landscape Architecture (214) 739-3226
Structural: L.A. Fuess Partners, Inc (214) 593-1118
MEP: M-E Engineers (214) 741-1589
Civil: KSA Engineers, Inc (903) 236-7700
Technology: M-E Engineers (303) 421-6656

BRINKLEY SARGENT WIGINTON ARCHITECTS

LONGVIEW POLICE DEPARTMENT

518 W SOUTH ST. LONGVIEW, TEXAS 75601

HISTORY		
#	DATE	DESCRIPTION

STATE OF TEXAS
MICHAEL J. BURNS
59990
LICENSED
PROFESSIONAL ENGINEER
SEAL 06/04/2020
TBPE Firm Registration No. F-1356

DIMENSIONAL LAYOUT I

21719
06/04/2020

C-104

BID ISSUE

© 2019 Brinkley Sargent Wigginton Architects, Inc.

!!! CAUTION !!!
EXISTING OVERHEAD UTILITIES IN VICINITY CONTRACTOR SHALL EXERCISE EXTREME CAUTION WHEN WORKING NEAR ELECTRIC FACILITIES

!!! WARNING !!!
THE ENGINEER ASSUMES NO RESPONSIBILITY FOR THE ACCURACY OF THE LOCATION OF UNDERGROUND UTILITIES. THE CONTRACTOR SHALL BE RESPONSIBLE FOR LOCATION AND AVOIDING ALL EXISTING UTILITIES BY CALLING THE "ONE CALL" LOCATOR SERVICE AT 1.800.344.8377 (DIG TESS) OR 1.800.245.4545 TEXAS ONE CALL AT LEAST 48 HOURS PRIOR TO CONSTRUCTION.

Texas 811

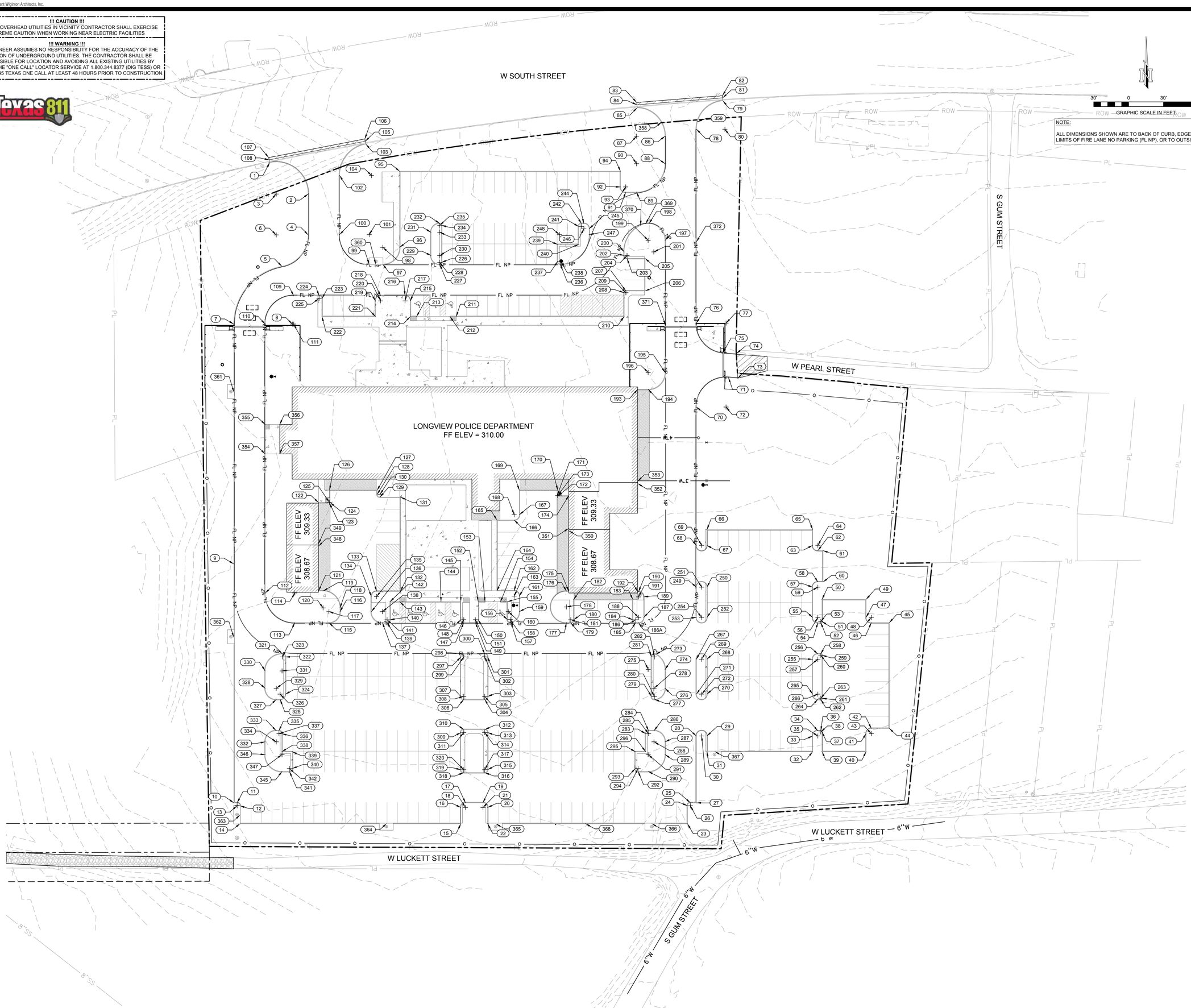

NOTE:
ALL DIMENSIONS SHOWN ARE TO BACK OF CURB, EDGE OF CONCRETE, LIMITS OF FIRE LANE NO PARKING (FL NP), OR TO OUTSIDE EDGE OF FENCE.

Architect: Brinkley Sargent Wigginton Architects (972) 960-9970
Landscape: Kendall Landscape Architecture (214) 739-3226
Structural: L.A. Fuess Partners, Inc (214) 593-1118
MEP: M-E Engineers (214) 741-1589
Civil: KSA Engineers, Inc (903) 236-7700
Technology: M-E Engineers (303) 421-6656

BRINKLEY SARGENT WIGINTON ARCHITECTS

LONGVIEW POLICE DEPARTMENT

518 W SOUTH ST. LONGVIEW, TEXAS 75601

HISTORY		
#	DATE	DESCRIPTION

STATE OF TEXAS
MICHAEL A. BURNS
59990
LICENSED
PROFESSIONAL ENGINEER

SEAL 6/4/2020
TBPE Firm Registration No. F-1356

DIMENSIONAL LAYOUT II

21719
06/04/2020

C-105

BID ISSUE

© 2019 Brinkley Sargent Wigginton Architects, Inc.

DIMENSIONAL LAYOUT TABLE

POINT NUMBER	ELEVATION	NORTHING	EASTING	DESCRIPTION
1	301.04	6883293.02	3124600.01	BOC/PC
2	304.86	6883266.07	3124633.12	PT/BOC
3	305.21	6883266.07	3124605.62	CPT = R27'-6"
4	306.81	6883230.85	3124633.12	PC/BOC
5	307.40	6883203.80	3124610.56	PCC/BOC
6	305.37	6883230.85	3124605.62	CPT = R27'-6"
7	307.64	6883154.12	3124569.12	PT/BOC
8	307.47	6883154.12	3124619.62	CPT = R50'-6"
9	305.62	6882947.78	3124569.12	MIDPOINT
10	303.65	6882742.29	3124569.12	PI/BOC
11	303.63	6882742.29	3124571.96	PC/BOC
12	303.62	6882739.79	3124574.46	PT/BOC
13	303.60	6882739.79	3124571.96	CPT = R2'-6"
14	303.51	6882724.29	3124574.46	PI/BOC
15	304.70	6882724.29	3124764.46	PI/BOC
16	305.05	6882738.29	3124764.46	PC/BOC
17	305.13	6882742.29	3124768.46	PT/BOC
18	304.59	6882738.29	3124768.46	CPT = R4'
19	305.20	6882742.29	3124783.46	PC/BOC
20	305.18	6882738.29	3124787.46	PT/BOC
21	304.72	6882738.29	3124783.46	CPT = R4'
22	304.79	6882724.29	3124787.46	PI/BOC
23	305.42	6882724.29	3124959.46	PI/BOC
24	305.55	6882739.79	3124959.46	PC/BOC
25	305.59	6882742.29	3124961.96	PT/BOC
26	305.61	6882739.79	3124961.96	CPT = R2'-6"
27	305.64	6882742.29	3124967.12	PI/BOC
28	306.19	6882799.79	3124967.12	PC/BOC
29	306.27	6882799.79	3124976.12	PT/BOC
30	306.26	6882799.79	3124971.62	CPT = R4'-6"
31	306.14	6882786.29	3124976.12	PI/BOC
32	306.55	6882786.29	3125067.12	PI/BOC
33	306.66	6882799.79	3125067.12	PC/BOC
34	306.73	6882804.29	3125071.62	PT/BOC
35	306.77	6882799.79	3125071.62	CPT = R5'
36	306.70	6882804.29	3125074.12	PC/BOC
37	306.74	6882803.29	3125075.12	PT/BOC
38	306.73	6882803.29	3125074.12	CPT = R1'
39	306.90	6882786.29	3125075.12	PI/BOC
40	307.08	6882786.29	3125113.12	PI/BOC
41	306.90	6882801.79	3125113.12	PC/BOC
42	306.97	6882806.29	3125117.62	PT/BOC
43	306.44	6882801.79	3125117.62	CPT = R4'-6"
44	307.07	6882806.29	3125133.12	PI/BOC
45	307.96	6882897.29	3125133.12	PI/BOC
46	307.86	6882897.29	3125117.62	PC/BOC
47	307.88	6882901.79	3125113.12	PT/BOC
48	307.22	6882901.79	3125117.62	CPT = R4'-6"
49	308.06	6882917.29	3125113.12	PI/BOC
50	308.02	6882917.29	3125075.12	PI/BOC
51	307.74	6882898.29	3125075.12	PC/BOC
52	307.72	6882897.29	3125074.12	PT/BOC
53	307.74	6882898.29	3125074.12	CPT = R1'
54	307.72	6882897.29	3125071.62	PC/BOC
55	307.79	6882901.79	3125067.12	PT/BOC
56	307.82	6882901.79	3125071.62	CPT = R4'-6"
57	308.15	6882927.79	3125067.12	PC/BOC
58	308.22	6882932.29	3125071.62	PT/BOC
59	307.57	6882927.79	3125071.62	CPT = R4'-6"
60	308.24	6882932.29	3125076.12	PI/BOC
61	308.61	6882959.29	3125076.12	PI/BOC
62	308.58	6882959.29	3125071.62	PC/BOC
63	308.65	6882963.79	3125067.12	PT/BOC
64	308.43	6882963.79	3125071.62	CPT = R4'-6"
65	308.86	6882977.29	3125067.12	PI/BOC
66	308.57	6882977.29	3124976.12	PI/BOC
67	308.38	6882963.79	3124976.12	PC/BOC
68	308.30	6882963.79	3124967.12	PT/BOC
69	308.42	6882963.79	3124971.62	CPT = R4'-6"
70	309.93	6883082.76	3124967.12	PC/BOC
71	311.00	6883108.18	3124994.64	PT/BOC
72	310.47	6883082.76	3124992.62	CPT = R25'-6"
73	310.86	6883107.55	3125002.61	PI/BOC
74	310.87	6883128.70	3125001.46	PI/BOC
75	310.70	6883129.62	3124989.99	PC/BOC
76	310.49	6883154.99	3124967.12	PT/BOC
77	310.97	6883154.99	3124992.62	CPT = R25'-6"
78	313.99	6883321.77	3124967.12	PC/BOC
79	314.02	6883346.21	3124989.89	PT/BOC
80	313.76	6883321.77	3124991.62	CPT = R24'-6"
81	313.43	6883348.70	3124989.74	EOC/MATCH EXISTING
82	313.55	6883350.70	3124989.62	EOP/MATCH EXISTING
83	311.97	6883344.77	3124915.78	EOP/MATCH EXISTING
84	311.94	6883342.78	3124915.96	EOC/MATCH EXISTING
85	312.47	6883340.29	3124916.14	PC/BOC

DIMENSIONAL LAYOUT TABLE

POINT NUMBER	ELEVATION	NORTHING	EASTING	DESCRIPTION
86	313.04	6883315.79	3124940.12	PT/BOC
87	312.01	6883315.79	3124915.62	CPT = 24'-6"
88	311.22	6883292.12	3124940.12	PC/BOC
89	309.55	6883267.62	3124915.62	PT/BOC
90	311.95	6883292.12	3124915.62	CPT = R24'-6"
91	309.23	6883267.62	3124906.29	PC/BOC
92	309.29	6883272.12	3124901.79	PT/BOC
93	309.55	6883272.12	3124906.29	CPT = R4'-6"
94	309.94	6883285.62	3124901.79	PI/BOC
95	308.43	6883285.62	3124711.79	PI/BOC
96	306.81	6883220.12	3124711.79	PC/BOC
97	306.44	6883205.62	3124697.29	PT/BOC
98	306.76	6883220.12	3124697.29	CPT = R14'-6"
99	306.44	6883205.62	3124685.62	PC/BOC
100	306.66	6883231.12	3124660.12	PT/BOC
101	306.55	6883231.12	3124685.62	CPT = R25'-6"
102	305.39	6883281.94	3124660.12	PC/BOC
103	304.56	6883308.98	3124682.68	PI/BOC
104	306.66	6883281.95	3124687.61	CPT = R27'-6"
105	304.41	6883311.45	3124682.20	EOC/MATCH EXISTING
106	304.52	6883313.41	3124681.82	EOP/MATCH EXISTING
107	300.44	6883297.41	3124599.12	EOP/MATCH EXISTING
108	300.31	6883295.44	3124599.50	EOC/MATCH EXISTING
109	307.32	6883178.62	3124620.62	PC/BOC
110	307.82	6883154.12	3124596.12	PT/BOC
111	307.46	6883154.12	3124620.62	CPR = R24'-6"
112	305.61	6882922.79	3124596.12	PC/BOC
113	306.39	6882897.29	3124621.62	PT/BOC
114	308.06	6882922.79	3124621.62	CPT = R25'-6"
115	307.03	6882897.29	3124650.96	PC/BOC
116	307.71	6882906.79	3124660.46	PT/BOC
117	307.67	6882906.76	3124650.95	CPT = R9'-6"
118	307.87	6882909.99	3124660.45	PC/BOC
119	308.89	6882924.52	3124645.96	PT/BOC
120	307.84	6882909.99	3124645.95	CPT = R14'-6"
121	309.12	6882924.52	3124641.96	PI/BOC
122	309.78	6883000.62	3124641.96	PI/BOC
123	309.24	6883000.12	3124651.46	PC/FOC
124	309.24	6883000.59	3124651.96	PT/FOC
125	309.74	6883000.62	3124651.46	PI/BOC, CPT/FOC = R.5'
126	309.76	6883011.29	3124651.46	PI/BOC
127	309.75	6883011.29	3124692.46	PI/BOC
128	309.75	6883007.79	3124692.46	PC/BOC
129	309.75	6883005.29	3124694.96	PT/BOC
130	309.75	6883007.79	3124694.96	CPT = R2'-6"
131	309.75	6883005.29	3124712.46	PI/BOC
132	308.50	6882924.29	3124712.46	PI/BOC
133	308.50	6882924.29	3124691.96	PC/BOC
134	308.50	6882919.79	3124687.46	PT/BOC
135	308.50	6882919.79	3124691.96	CPT = R4'-6"
136	308.50	6882906.79	3124687.46	PC/BOC
137	308.11	6882897.29	3124696.96	PT/BOC
138	308.40	6882906.79	3124696.96	CPT = R9'-6"
139	308.03	6882897.29	3124700.96	PC/BOC
140	308.33	6882899.79	3124703.46	PC/BOC
141	308.26	6882899.79	3124700.96	CPT = R2'-6"
142	308.50	6882915.29	3124703.46	PI/BOC
143	308.50	6882915.29	3124711.96	PI/BOC
144	308.50	6882915.29	3124747.39	EOC/BOC
145	308.50	6882915.29	3124764.46	PI/BOC
146	308.28	6882899.81	3124764.46	PC/BOC
147	308.21	6882897.31	3124766.96	PT/BOC
148	308.28	6882899.81	3124766.96	CPT = R2'-6"
149	308.22	6882897.31	3124776.96	PC/BOC
150	308.42	6882899.81	3124779.46	PT/BOC
151	308.32	6882899.81	3124776.96	CPT = R2'-6"
152	308.51	6882915.29	3124779.46	PI/BOC
153	308.50	6882915.29	3124785.26	EOC/BOC
154	308.50	6882915.29	3124798.58	EOC/BOC
155	308.50	6882915.29	3124804.46	PI/BOC
156	308.28	6882899.99	3124804.46	PC/BOC
157	308.25	6882897.56	3124807.55	PCC/BOC
158	308.31	6882899.99	3124806.96	CPT = R2'-6"
159	308.50	6882906.79	3124814.79	PT/BOC
160	308.39	6882906.79	3124805.29	CPT = R9'-6"
161	308.50	6882920.12	3124814.79	PC/BOC
162	308.50	6882924.62	3124810.29	PT/BOC
163	308.50	6882920.12	3124810.29	CPT = R4'-6"
164	308.51	6882924.62	3124795.46	PI/BOC
165	309.52	6882985.62	3124795.46	PI/BOC
166	309.50	6882985.62	3124810.29	PC/BOC
167	309.50	6882990.12	3124814.79	PT/BOC
168	309.50	6882990.12	3124810.29	CPT = R4'-6"
169	309.53	6883011.29	3124814.79	PI/BOC
170	309.54	6883011.29	3124847.79	PI/BOC

DIMENSIONAL LAYOUT TABLE

POINT NUMBER	ELEVATION	NORTHING	EASTING	DESCRIPTION
171	309.00	6883006.62	3124847.29	PC/FOC
172	309.00	6883006.12	3124847.79	PT/FOC
173	309.50	6883006.62	3124847.79	PI/BOC, CPT/FOC = R.5'
174	309.79	6883006.62	3124857.29	PI/BOC
175	309.11	6882924.29	3124857.29	PI/BOC
176	308.90	6882924.29	3124855.29	PC/BOC
177	307.57	6882897.29	3124855.29	PT/BOC
178	307.59	6882910.79	3124855.29	CPT = R13'-6"
179	307.39	6882897.29	3124858.96	PC/BOC
180	307.15	6882899.79	3124861.46	PT/BOC
181	307.32	6882899.79	3124858.96	CPT = R2'-6"
182	307.39	6882917.29	3124861.46	PI/BOC
183	307.80	6882917.29	3124912.45	PI/BOC
184	307.57	6882899.79	3124912.46	PC/BOC
185	307.56	6882897.29	3124914.96	PCC/BOC
186	307.60	6882899.79	3124914.96	CPT = R2'-6"
186A	307.60	6882897.29	3124917.29	PC/BOC
187	308.10	6882901.79	3124921.79	PT/BOC
188	307.85	6882901.79	3124917.29	CPT = R4'-6"
189	308.70	6882919.45	3124921.79	PC/BOC
190	308.34	6882923.95	3124917.29	PT/BOC
191	308.54	6882919.45	3124917.29	CPT = R4'-6"
192	308.31	6882923.95	3124916.62	PI/BOC
193	309.80	6883098.04	3124916.62	PI/BOC
194	310.20	6883098.04	3124925.62	PC/BOC
195	311.01	6883112.54	3124940.12	PT/BOC
196	310.30	6883112.54	3124925.62	CPT = R14'-6"
197	310.83	6883226.12	3124940.12	PC/BOC
198	310.13	6883240.60	3124926.45	PCC/BOC
199	309.74	6883226.12	3124925.62	CPT = R14'-6"
200	308.26	6883216.24	3124904.96	PT/BOC
201	309.82	6883216.24	3124930.46	CPT = R25'-6"
202	308.31	6883213.12	3124904.96	PC/BOC
203	308.21	6883210.62	3124907.46	PT/BOC
204	308.27	6883213.12	3124907.46	CPT = R2'-6"
205	308.49	6883210.62	3124922.96	PI/BOC
206	308.64	6883182.62	3124922.96	PI/BOC
207	308.25	6883182.62	3124906.46	PC/BOC
208	308.40	6883181.12	3124904.96	PT/BOC
209	308.35	6883181.12	3124906.46	CPT = R1'-6"
210	308.71	6883160.62	3124904.96	PI/BOC
211	307.47	6883160.62	3124760.46	EOC/BOC
212	309.97	6883160.62	3124755.12	EOC/BOC
213	306.93	6883160.62	3124726.32	EOC/BOC
214	307.43	6883160.62	3124720.96	PI/BOC
215	307.31	6883174.12	3124720.96	PC/BOC
216	307.32	6883178.62	3124716.46	PT/BOC
217	307.35	6883174.12	3124716.46	CPT = R4'-6"
218	307.26	6883178.62	3124695.46	PC/BOC
219	307.24	6883174.12	3124690.96	PT/BOC
220	307.30	6883174.12	3124695.46	CPT = R4'-6"
221	307.41	6883160.62	3124690.96	PI/BOC
222	307.14	6883160.62	3124644.96	PI/BOC
223	307.08	6883176.12	3124644.96	PC/BOC
224	307.01	6883178.62	3124642.46	PT/BOC
225	307.09	6883176.12	3124642.46	CPT = R2'-6"
226	306.95	6883207.12	3124747.79	PC/BOC
227	306.95	6883205.62	3124746.29	PCC/BOC
228	306.98	6883207.12	3124746.29	CPT = R1'-6"
229	307.05	6883213.12	3124738.79	PT/BOC
230	307.04	6883213.12	3124746.29	CPT = R7'-6"
231	307.35	6883233.12	3124738.79	PC/BOC
232	307.25	6883240.62	3124746.29	PCC/BOC
233	307.23	6883233.12	3124746.29	CPT = R7'-6"
234	307.25	6883239.12	3124747.79	PT/BOC
235	307.28	6883239.12	3124746.29	CPT = R1'-6"
236	307.62	6883205.63	3124850.05	PCC/BOC
237	307.54	6883208.12	3124847.79	PT/BOC
238	307.63	6883208.12	3124850.29	CPT = R2'-6"
239	307.61	6883222.62	3124847.79	PI/BOC
240	308.28	6883222.62	3124865.79	PI/BOC
241	308.41	6883238.12	3124865.79	PC/BOC
242	308.48	6883240.62	3124868.29	PT/BOC
243	308.50	6883238.12	3124868.29	CPT = R2'-6"
244	308.50	6883240.62	3124870.29	PC/BOC
245	308.54	6883236.12	3124874.79	PT/BOC
246	308.50	6883236.12	3124870.29	CPT = R4'-6"
247	308.34	6883231.12	3124874.79	PC/BOC
248	307.42	6883231.12	3124849.29	CPT = R25'-6"
249	307.84	6882927.79	3124967.12	PC/BOC
250	307.92	6882927.79	3124976.12	PT/BOC
251	307.92	6882927.79	3124971.62	CPT = R4'-6"
252	307.58	6882901.79	3124976.12	PC/BOC
253	307.50	6882901.79	3124967.12	PT/BOC
254	307.58	6882901.79	3124971.62	CPT = R4'-6"

DIMENSIONAL LAYOUT TABLE

POINT NUMBER	ELEVATION	NORTHING	EASTING	DESCRIPTION
255	307.31	6882865.79	3125067.12	PC/BOC
256	307.38	6882870.29	3125071.62	PT/BOC
257	307.38	6882865.79	3125071.62	CPT = R4'-6"
258	307.40	6882870.29	3125074.12	PC/BOC
259	307.39	6882869.29	3125075.12	PT/BOC
260	307.41	6882869.29	3125074.12	CPT = R1'
261	307.02	6882832.29	3125075.12	PC/BOC
262	307.00	6882831.29	3125074.12	PT/BOC
263	307.03	6882832.29	3125074.12	CPT = R1'
264	306.99	6882831.29	3125071.62	PC/BOC
265	307.01	6882835.79	3125067.12	PT/BOC
266	307.08	6882835.79	3125071.62	CPT = R4'-6"
267	307.04	6882865.79	3124967.12	PC/BOC
268	307.12	6882865.79	3124976.12	PT/BOC
269	307.12	6882865.79	3124971.62	CPT = R4'-6"
270	306.73	6882835.79	3124976.12	PC/BOC
271	306.66	6882835.79	3124967.12	PT/BOC
272	306.74	6882835.79	3124971.62	CPT = R4'-6"
273	306.83	6882870.03	3124932.07	PCC/BOC
274	306.72	6882857.04	3124940.12	PT/BOC
275	306.14	6882857.04	3124925.62	CPT = R14'-6"
276	306.51	6882840.78	3124940.12	PC/BOC
277	306.31	6882831.29	3124931.08	PCC/BOC
278	306.46	6882840.78	3124930.62	CPT = R9'-6"
279	306.32	6882833.79	3124928.46	PT/BOC
280	306.37	6882833.79	3124930.96	CPT = R2'-6"
281	306.76	6882867.79	3124928.46	PC/BOC
282	306.83	6882867.79	3124930.96	CPT = R2'-6"
283	305.98	6882801.79	3124923.46	PC/BOC
284	306.02	6882804.29	3124925.96	PT/BOC
285	306.03	6882801.79	3124925.96	CPT = R2'-6"
286	306.05	6882804.29	3124930.62	PC/BOC
287	306.00	6882794.79	3124940.12	PT/BOC
288	305.99	6882794.79	3124930.62	CPT = R9'-6"
289	305.89	6882783.79	3124940.12	PC/BOC
290	305.67	6882769.29	3124925.62	PT/BOC
291	305.86	6882783.79	3124925.62	CPT = R14'-6"
292	305.62	6882769.29	3124916.96	PC/BOC
293	305.64	6882771.79	3124914.46	PT/BOC
294	305.68	6882771.79	3124916.96	CPT = R2'-6"
295	305.79	6882786.29	3124914.46	PI/BOC
296	305.85	6882786.29	3124923.46	PI/BOC
297	307.82	6882867.79	3124764.46	PC/BOC
298	307.87	6882870.29	3124766.96	PT/BOC
299	307.88	6882867.79	3124766.96	CPT = R2'-6"
300	307.96	6882870.29	3124784.96	PC/BOC
301	307.94	6882867.79	3124787.46	PT/BOC
302	307.99	6882867.79	3124784.96	CPT = R2'-6"
303	307.21	6882833.79	3124787.46	PC/BOC
304	307.16	6882831.29	3124784.96	PT/BOC
305	307.23	6882833.79	3124784.96	CPT = R2'-6"
306	307.22	6882831.29	3124766.96	PC/BOC
307	307.24	6882833.79	3124764.46	PT/BOC
308	307.27	6882833.79	3124766.96	CPT = R2'-6"
309	306.58	6882802.79	3124764.46	PC/BOC
310	306.64	6882805.29	3124766.96	PT/BOC
311	306.65	6882802.79	3124766.96	CPT = R2'-6"
312	306.73	6882805.29	3124784.96	PC/BOC
313	306.71	6882802.79	3124787.46	PT/BOC
314	306.75	6882802.79	3124784.96	CPT = R2'-6"
315	306.00	6882770.79	3124787.46	PC/BOC
316	305.94	6882768.29	3124784.96	PT/BOC
317	306.02	6882770.79	3124784.96	CPT = R2'-6"
318	305.85	6882768.29	3124766.96	PC/BOC
319	305.87	6882770.79	3124764.46	PT/BOC
320	305.91	6882770.79	3124766.96	CPT = R2'-6"
321	305.58	6882870.29	3124610.96	PCC/BOC
322	305.56	6882867.79	3124613.46	PT/BOC
323	305.61	6882867.79	3124610.96	CPT = R2'-6"
324	305.05	6882835.79	3124613.46	PC/BOC
325	304.92	6882831.29	3124608.96	PC/BOC
326	305.04	6882835.79	3124608.96	CPT = R4'-6"
327	304.91	6882831.29	3124605.62	PC/BOC
328	305.21	6882840.79	3124596.12	PT/BOC
329	305.19	6882840.79	3124605.62	CPT = R9'-6"
330	305.35	6882855.79	3124596.12	PC/BOC
331	305.41	6882855.79	3124610.62	CPT = R14'-6"
332	304.26	6882794.79	3124596.12	PC/BOC
333	304.41	6882804.29	3124605.62	PT/BOC
334	304.39	6882794.79	3124605.62	CPT = R9'-6"
335	304.42	6882804.29	3124607.96	PC/BOC
336	304.40	6882801.79	3124610.46	PT/BOC
337	304.45	6882801.79	3124607.96	CPT = R2'-6"
338	304.41	6882786.29	3124610.46	PI/BOC
339	304.31	6882786.29	3124619.46	PI/BOC

DIMENSIONAL LAYOUT TABLE

POINT NUMBER	ELEVATION	NORTHING	EASTING	DESCRIPTION
340	304.16	6882771.79	3124619.46	PC/BOC
341	304.11	6882769.29	3124616.96	PT/BOC
342	304.17	6882771.79	3124616.96	CPT = R2'-6"
345	304.08	6882769.29	3124610.62	PC/BOC
346	304.15	6882783.79	3124596.12	PT/BOC
347	304.38	6882783.79	3124610.62	CPT = R14'-6"
348	308.62	6882963.09	3124641.96	EOC
349	309.28	6882965.09	3124641.98	EOC
350	308.61	6882976.43	3124857.23	EOC
351	309.27	6882978.42	3124857.25	EOC
352	309.28	6883016.94	3124916.63	EOC
353	309.94	6883018.93	3124916.65	EOC
354	306.75	6883042.45	3124596.12	PI/BOC
355	306.99	6883067.78	3124596.12	PI/BOC
356	307.22	6883067.78	3124608.62	PI/EOC
357	306.94	6883042.45	3124608.62	PI/EOC
358	314.47	6883327.73	3124937.04	BOC
359	314.50	6883328.18	3124967.97	BOC
360	306.44	6883205.62	3124691.23	TOP OF INLET
361	307.07	6883095.53	3124569.21	TOP OF INLET
362	305.00	6882884.72	3124569.09	TOP OF INLET
363	303.54	6882731.80	3124574.46	TOP OF INLET
364	304.36	6882724.43	3124700.48	TOP OF INLET
365	304.75	6882724.25	3124794.54	TOP OF INLET
366	304.91	6882724.35	3124928.79	TOP OF INLET
367	306.13	6882786.43	3124982.95	TOP OF INLET
368	305.30	6882724.30	3124871.79	BOC
369	310.10	6883240.45	3124923.44	BOC
370	309.76	6883239.11	3124919.18	BOC
371	310.54	6883153.26	3124940.62	BOC
372	310.50	6883225.01	3124967.12	BOC

Architect: Brinkley Sargent Wigginton Architects (972) 960-9970
Landscape: Kendall Landscape Architecture (214) 739-3226
Structural: L.A. Fuess Partners, Inc (214) 593-1118
MEP: M-E Engineers (214) 741-1589
Civil: KSA Engineers, Inc (903) 236-7700
Technology: M-E Engineers (303) 421-6656

BRINKLEY SARGENT WIGINTON ARCHITECTS

LONGVIEW POLICE DEPARTMENT

518 W SOUTH ST. LONGVIEW, TEXAS 75601

HISTORY

#	DATE	DESCRIPTION

STATE OF TEXAS — MICHAEL A. BURNS — 59990 — LICENSED ARCHITECT

SEAL 06/04/2020

TBPE Firm Registration No. F-1356

DIMENSIONAL LAYOUT III

21719

06/04/2020

C-106

BID ISSUE

© 2019 Brinkley Sargent Wigginton Architects, Inc.

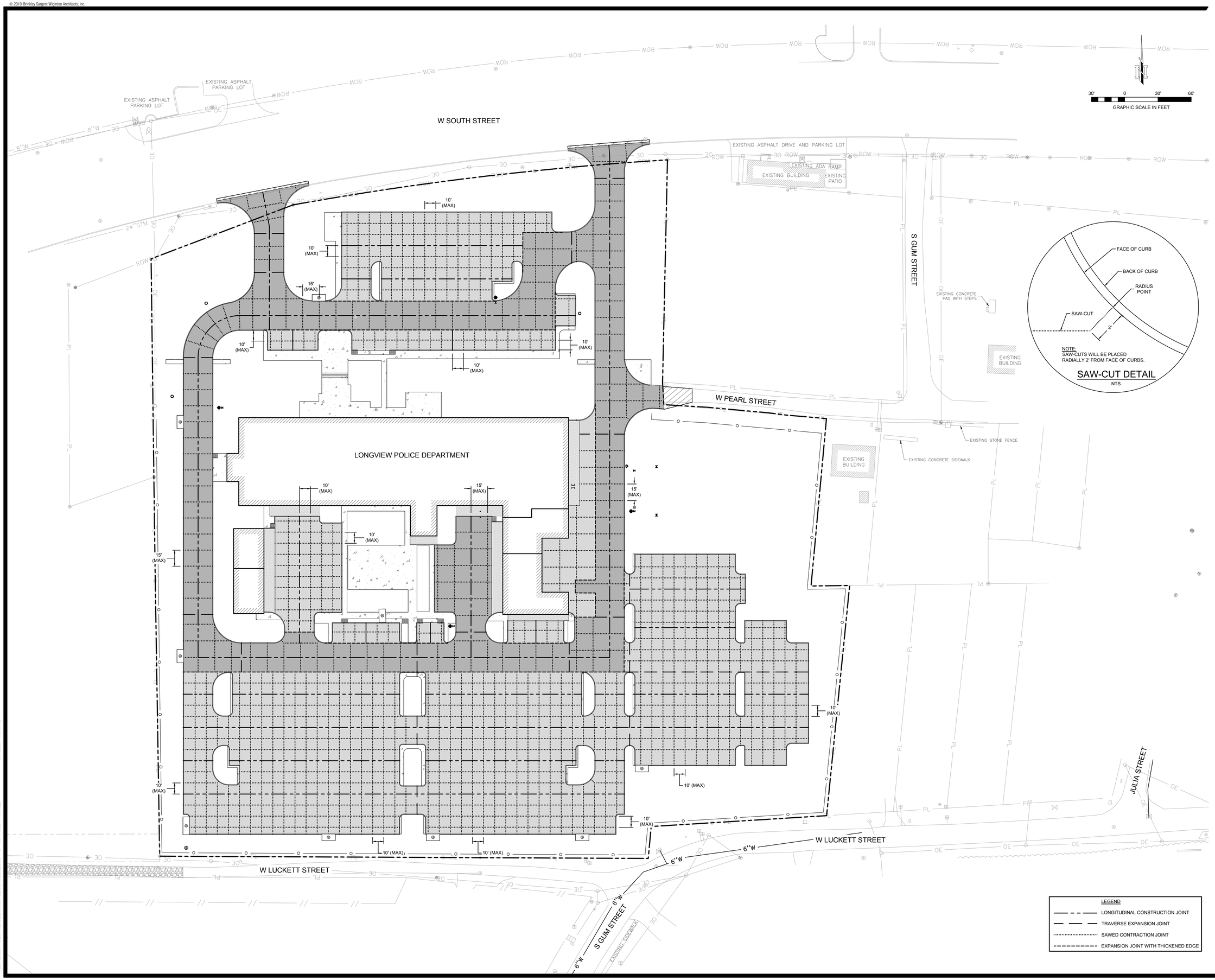

SAW-CUT DETAIL
NTS

LEGEND

- LONGITUDINAL CONSTRUCTION JOINT
- TRAVERSE EXPANSION JOINT
- SAWED CONTRACTION JOINT
- EXPANSION JOINT WITH THICKENED EDGE

Architect: Brinkley Sargent Wigginton Architects (972) 960-9970
Landscape: Kendall Landscape Architecture (214) 739-3226
Structural: L.A. Fuess Partners, Inc (214) 593-1118
MEP: M-E Engineers (214) 741-1589
Civil: KSA Engineers, Inc (903) 236-7700
Technology: M-E Engineers (303) 421-6656

BRINKLEY SARGENT WIGINTON ARCHITECTS

LONGVIEW POLICE DEPARTMENT

518 W SOUTH ST. LONGVIEW, TEXAS 75601

HISTORY

#	DATE	DESCRIPTION

STATE OF TEXAS
MICHAEL A. BURNS
50990
LICENSED
PROFESSIONAL ENGINEER

SEAL 06/04/2020
TBPE Firm Registration No. F-13356

JOINT LAYOUT PLAN

21719
06/04/2020

C-107

BID ISSUE

© 2019 Brinkley Sargent Wigginton Architects, Inc.

!!! CAUTION !!!
EXISTING OVERHEAD UTILITIES IN VICINITY CONTRACTOR SHALL EXERCISE EXTREME CAUTION WHEN WORKING NEAR ELECTRIC FACILITIES

!!! WARNING !!!
THE ENGINEER ASSUMES NO RESPONSIBILITY FOR THE ACCURACY OF THE LOCATION OF UNDERGROUND UTILITIES. THE CONTRACTOR SHALL BE RESPONSIBLE FOR LOCATION AND AVOIDING ALL EXISTING UTILITIES BY CALLING THE "ONE CALL" LOCATOR SERVICE AT 1.800.344.8377 (DIG TESS) OR 1.800.245.4545 TEXAS ONE CALL AT LEAST 48 HOURS PRIOR TO CONSTRUCTION.

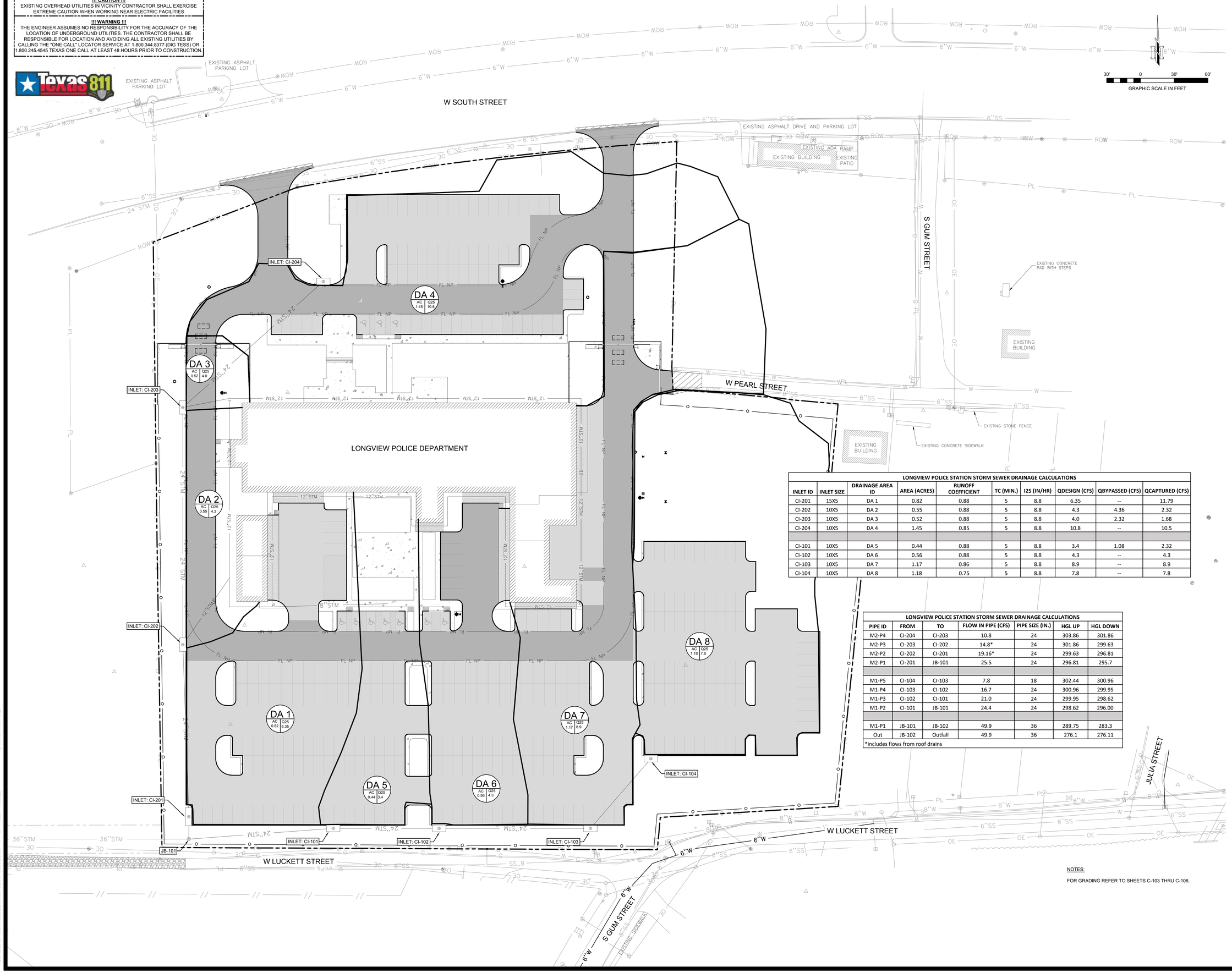

LONGVIEW POLICE STATION STORM SEWER DRAINAGE CALCULATIONS									
INLET ID	INLET SIZE	DRAINAGE AREA ID	AREA (ACRES)	RUNOFF COEFFICIENT	TC (MIN.)	I25 (IN/HR)	QDESIGN (CFS)	QBYPASSED (CFS)	QCAPTURED (CFS)
CI-201	15X5	DA 1	0.82	0.88	5	8.8	6.35	--	11.79
CI-202	10X5	DA 2	0.55	0.88	5	8.8	4.3	4.36	2.32
CI-203	10X5	DA 3	0.52	0.88	5	8.8	4.0	2.32	1.68
CI-204	10X5	DA 4	1.45	0.85	5	8.8	10.8	--	10.5
CI-101	10X5	DA 5	0.44	0.88	5	8.8	3.4	1.08	2.32
CI-102	10X5	DA 6	0.56	0.88	5	8.8	4.3	--	4.3
CI-103	10X5	DA 7	1.17	0.86	5	8.8	8.9	--	8.9
CI-104	10X5	DA 8	1.18	0.75	5	8.8	7.8	--	7.8

LONGVIEW POLICE STATION STORM SEWER DRAINAGE CALCULATIONS						
PIPE ID	FROM	TO	FLOW IN PIPE (CFS)	PIPE SIZE (IN.)	HGL UP	HGL DOWN
M2-P4	CI-204	CI-203	10.8	24	303.86	301.86
M2-P3	CI-203	CI-202	14.8*	24	301.86	299.63
M2-P2	CI-202	CI-201	19.16*	24	299.63	296.81
M2-P1	CI-201	JB-101	25.5	24	296.81	295.7
M1-P5	CI-104	CI-103	7.8	18	302.44	300.96
M1-P4	CI-103	CI-102	16.7	24	300.96	299.95
M1-P3	CI-102	CI-101	21.0	24	299.95	298.62
M1-P2	CI-101	JB-101	24.4	24	298.62	296.00
M1-P1	JB-101	JB-102	49.9	36	289.75	283.3
Out	JB-102	Outfall	49.9	36	276.1	276.11

*includes flows from roof drains

NOTES:

FOR GRADING REFER TO SHEETS C-103 THRU C-106.

Architect: Brinkley Sargent Wigginton Architects (972) 960-9970
Landscape: Kendall Landscape Architecture (214) 739-3226
Structural: L.A. Fuess Partners, Inc (214) 593-1118
MEP: M-E Engineers (214) 741-1589
Civil: KSA Engineers, Inc (903) 236-7700
Technology: M-E Engineers (303) 421-6656

BRINKLEY SARGENT WIGINTON ARCHITECTS

LONGVIEW POLICE DEPARTMENT

518 W SOUTH ST. LONGVIEW, TEXAS 75601

HISTORY

#	DATE	DESCRIPTION

STATE OF TEXAS
MICHAEL A. BURNS
58990
LICENSED
PROFESSIONAL ENGINEER
06/04/2020
SEAL
TBPE Firm Registration No. F-1356

DRAINAGE PLAN

21719
06/04/2020

C-108

BID ISSUE

© 2019 Brinkley Sargent Wigginton Architects, Inc.

!!! CAUTION !!!
EXISTING OVERHEAD UTILITIES IN VICINITY CONTRACTOR SHALL EXERCISE EXTREME CAUTION WHEN WORKING NEAR ELECTRIC FACILITIES

!!! WARNING !!!
THE ENGINEER ASSUMES NO RESPONSIBILITY FOR THE ACCURACY OF THE LOCATION OF UNDERGROUND UTILITIES. THE CONTRACTOR SHALL BE RESPONSIBLE FOR LOCATION AND AVOIDING ALL EXISTING UTILITIES BY CALLING THE "ONE CALL" LOCATOR SERVICE AT 1.800.344.8377 (DIG TESS) OR 1.800.245.4545 TEXAS ONE CALL AT LEAST 48 HOURS PRIOR TO CONSTRUCTION.

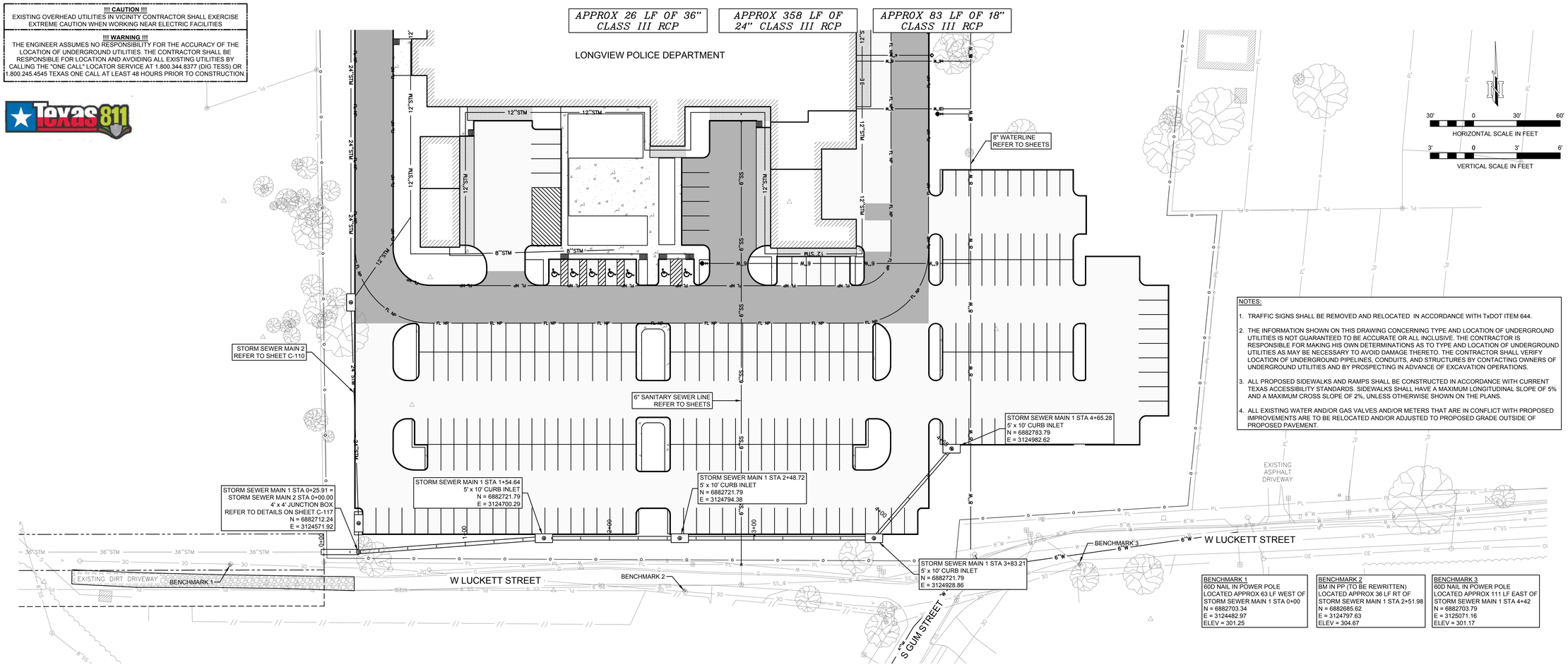

NOTES:

1. TRAFFIC SIGNS SHALL BE REMOVED AND RELOCATED IN ACCORDANCE WITH TxDOT ITEM 644.
2. THE INFORMATION SHOWN ON THIS DRAWING CONCERNING TYPE AND LOCATION OF UNDERGROUND UTILITIES IS NOT GUARANTEED TO BE ACCURATE OR ALL INCLUSIVE. THE CONTRACTOR IS RESPONSIBLE FOR MAKING HIS OWN DETERMINATIONS AS TO TYPE AND LOCATION OF UNDERGROUND UTILITIES AS MAY BE NECESSARY TO AVOID DAMAGE THERETO. THE CONTRACTOR SHALL VERIFY LOCATION OF UNDERGROUND PIPELINES, CONDUITS, AND STRUCTURES BY CONTACTING OWNERS OF UNDERGROUND UTILITIES AND BY PROSPECTING IN ADVANCE OF EXCAVATION OPERATIONS.
3. ALL PROPOSED SIDEWALKS AND RAMPS SHALL BE CONSTRUCTED IN ACCORDANCE WITH CURRENT TEXAS ACCESSIBILITY STANDARDS. SIDEWALKS SHALL HAVE A MAXIMUM LONGITUDINAL SLOPE OF 5% AND A MAXIMUM CROSS SLOPE OF 2%, UNLESS OTHERWISE SHOWN ON THE PLANS.
4. ALL EXISTING WATER AND/OR GAS VALVES AND/OR METERS THAT ARE IN CONFLICT WITH PROPOSED IMPROVEMENTS ARE TO BE RELOCATED AND/OR ADJUSTED TO PROPOSED GRADE OUTSIDE OF PROPOSED PAVEMENT.

BENCHMARK 1	BENCHMARK 2	BENCHMARK 3
60D NAIL IN POWER POLE LOCATED APPROX 63 LF WEST OF STORM SEWER MAIN 1 STA 0+00 N = 6882703.34 E = 3124482.97 ELEV = 301.25	BM IN PP (TO BE REWRITTEN) LOCATED APPROX 36 LF RT OF STORM SEWER MAIN 1 STA 2+51.98 N = 6882685.62 E = 3124797.63 ELEV = 304.67	60D NAIL IN POWER POLE LOCATED APPROX 111 LF EAST OF STORM SEWER MAIN 1 STA 4+42 N = 6882703.79 E = 3125071.16 ELEV = 301.17

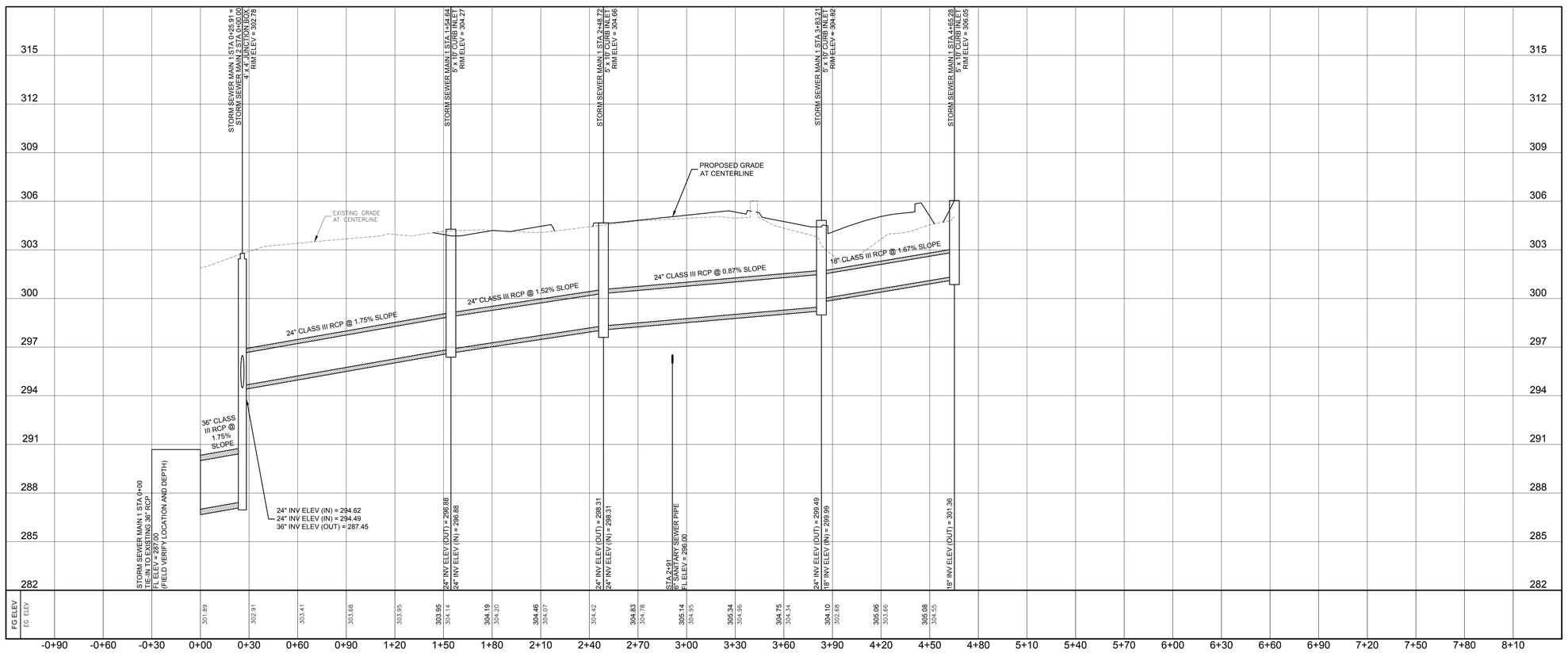

Architect: Brinkley Sargent Wigginton Architects (972) 960-9970
Landscape: Kendall Landscape Architecture (214) 739-3226
Structural: L.A. Fuess Partners, Inc (214) 593-1118
MEP: M-E Engineers (214) 741-1589
Civil: KSA Engineers, Inc (903) 236-7700
Technology: M-E Engineers (303) 421-6656

BRINKLEY SARGENT WIGINTON ARCHITECTS

LONGVIEW POLICE DEPARTMENT

518 W SOUTH ST, LONGVIEW, TEXAS 75601

HISTORY		
#	DATE	DESCRIPTION

STATE OF TEXAS — MICHAEL A. BURNS — 59990 — REGISTERED PROFESSIONAL ENGINEER

SEAL 06/04/2020
TBPE Firm Registration No. F-1356

STORM SEWER MAIN 1 PLAN AND PROFILE

21719
06/04/2020

C-109

BID ISSUE

© 2019 Brinkley Sargent Wigginton Architects, Inc.

!!! CAUTION !!!
EXISTING OVERHEAD UTILITIES IN VICINITY CONTRACTOR SHALL EXERCISE EXTREME CAUTION WHEN WORKING NEAR ELECTRIC FACILITIES

!!! WARNING !!!
THE ENGINEER ASSUMES NO RESPONSIBILITY FOR THE ACCURACY OF THE LOCATION OF UNDERGROUND UTILITIES. THE CONTRACTOR SHALL BE RESPONSIBLE FOR LOCATION AND AVOIDING ALL EXISTING UTILITIES BY CALLING THE "ONE CALL" LOCATOR SERVICE AT 1.800.344.8377 (DIG TESS) OR 1.800.245.4545 TEXAS ONE CALL AT LEAST 48 HOURS PRIOR TO CONSTRUCTION.

Texas 811

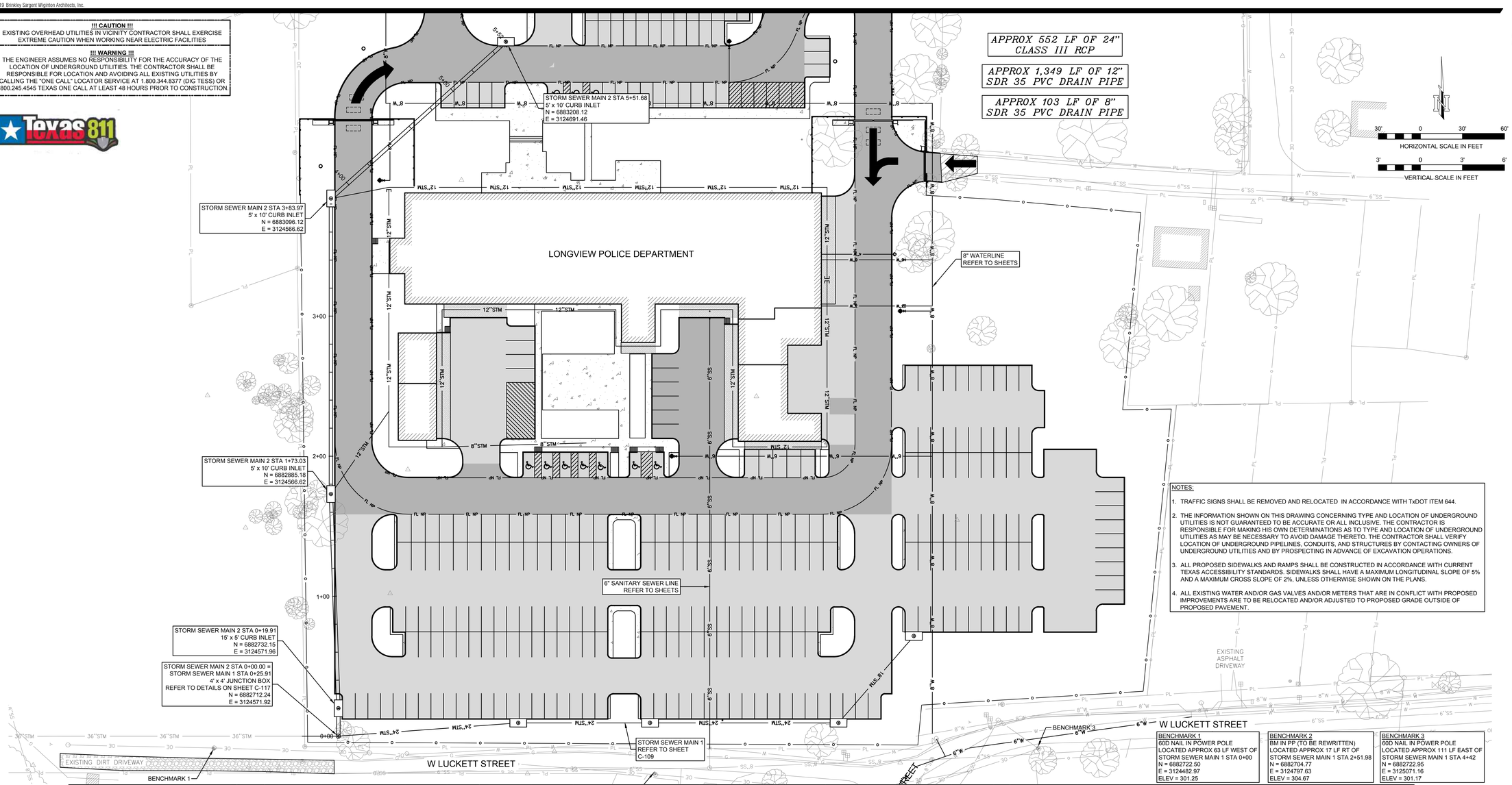

NOTES:

1. TRAFFIC SIGNS SHALL BE REMOVED AND RELOCATED IN ACCORDANCE WITH TxDOT ITEM 644.
2. THE INFORMATION SHOWN ON THIS DRAWING CONCERNING TYPE AND LOCATION OF UNDERGROUND UTILITIES IS NOT GUARANTEED TO BE ACCURATE OR ALL INCLUSIVE. THE CONTRACTOR IS RESPONSIBLE FOR MAKING HIS OWN DETERMINATIONS AS TO TYPE AND LOCATION OF UNDERGROUND UTILITIES AS MAY BE NECESSARY TO AVOID DAMAGE THERETO. THE CONTRACTOR SHALL VERIFY LOCATION OF UNDERGROUND PIPELINES, CONDUITS, AND STRUCTURES BY CONTACTING OWNERS OF UNDERGROUND UTILITIES AND BY PROSPECTING IN ADVANCE OF EXCAVATION OPERATIONS.
3. ALL PROPOSED SIDEWALKS AND RAMPS SHALL BE CONSTRUCTED IN ACCORDANCE WITH CURRENT TEXAS ACCESSIBILITY STANDARDS. SIDEWALKS SHALL HAVE A MAXIMUM LONGITUDINAL SLOPE OF 5% AND A MAXIMUM CROSS SLOPE OF 2%, UNLESS OTHERWISE SHOWN ON THE PLANS.
4. ALL EXISTING WATER AND/OR GAS VALVES AND/OR METERS THAT ARE IN CONFLICT WITH PROPOSED IMPROVEMENTS ARE TO BE RELOCATED AND/OR ADJUSTED TO PROPOSED GRADE OUTSIDE OF PROPOSED PAVEMENT.

BENCHMARK 1
60D NAIL IN POWER POLE
LOCATED APPROX 63 LF WEST OF STORM SEWER MAIN 1 STA 0+00
N = 6882722.50
E = 3124482.97
ELEV = 301.25

BENCHMARK 2
BM IN PP (TO BE REWRITTEN)
LOCATED APPROX 17 LF RT OF STORM SEWER MAIN 1 STA 2+51.98
N = 6882704.77
E = 3124797.63
ELEV = 304.67

BENCHMARK 3
60D NAIL IN POWER POLE
LOCATED APPROX 111 LF EAST OF STORM SEWER MAIN 1 STA 4+42
N = 6882722.95
E = 3125071.16
ELEV = 301.17

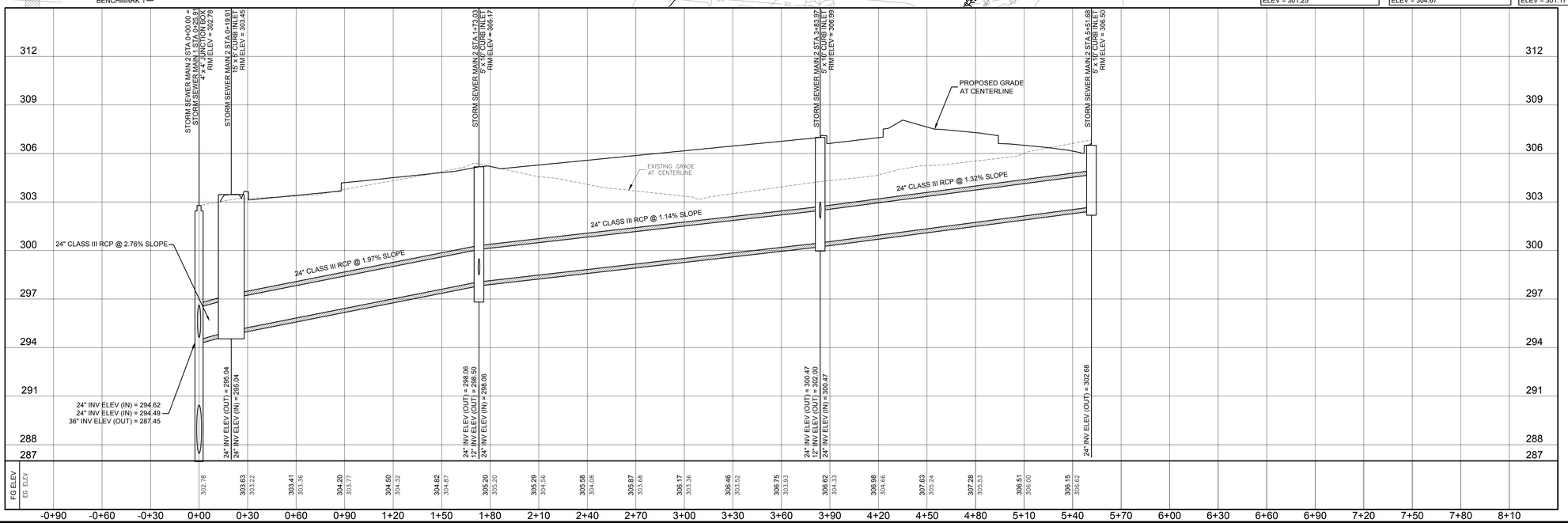

Architect: Brinkley Sargent Wigginton Architects (972) 960-9970
Landscape: Kendall Landscape Architecture (214) 739-3226
Structural: L.A. Fuess Partners, Inc (214) 593-1118
MEP: M-E Engineers (214) 741-1589
Civil: KSA Engineers, Inc (903) 236-7700
Technology: M-E Engineers (303) 421-6656

BRINKLEY SARGENT WIGINTON ARCHITECTS

LONGVIEW POLICE DEPARTMENT

518 W SOUTH ST, LONGVIEW, TEXAS 75601

HISTORY

#	DATE	DESCRIPTION

STATE OF TEXAS — MICHAEL A. BURNS — 59990

SEAL 06/04/2020
TBPE Firm Registration No. F-1356

STORM SEWER MAIN 2
PLAN AND PROFILE

21719
06/04/2020

C-110

BID ISSUE

© 2019 Brinkley Sargent Wigginton Architects, Inc.

!!! CAUTION !!!
EXISTING OVERHEAD UTILITIES IN VICINITY CONTRACTOR SHALL EXERCISE EXTREME CAUTION WHEN WORKING NEAR ELECTRIC FACILITIES

!!! WARNING !!!
THE ENGINEER ASSUMES NO RESPONSIBILITY FOR THE ACCURACY OF THE LOCATION OF UNDERGROUND UTILITIES. THE CONTRACTOR SHALL BE RESPONSIBLE FOR LOCATION AND AVOIDING ALL EXISTING UTILITIES BY CALLING THE "ONE CALL" LOCATOR SERVICE AT 1.800.344.8377 (DIG TESS) OR 1.800.245.4545 TEXAS ONE CALL AT LEAST 48 HOURS PRIOR TO CONSTRUCTION.

Texas811

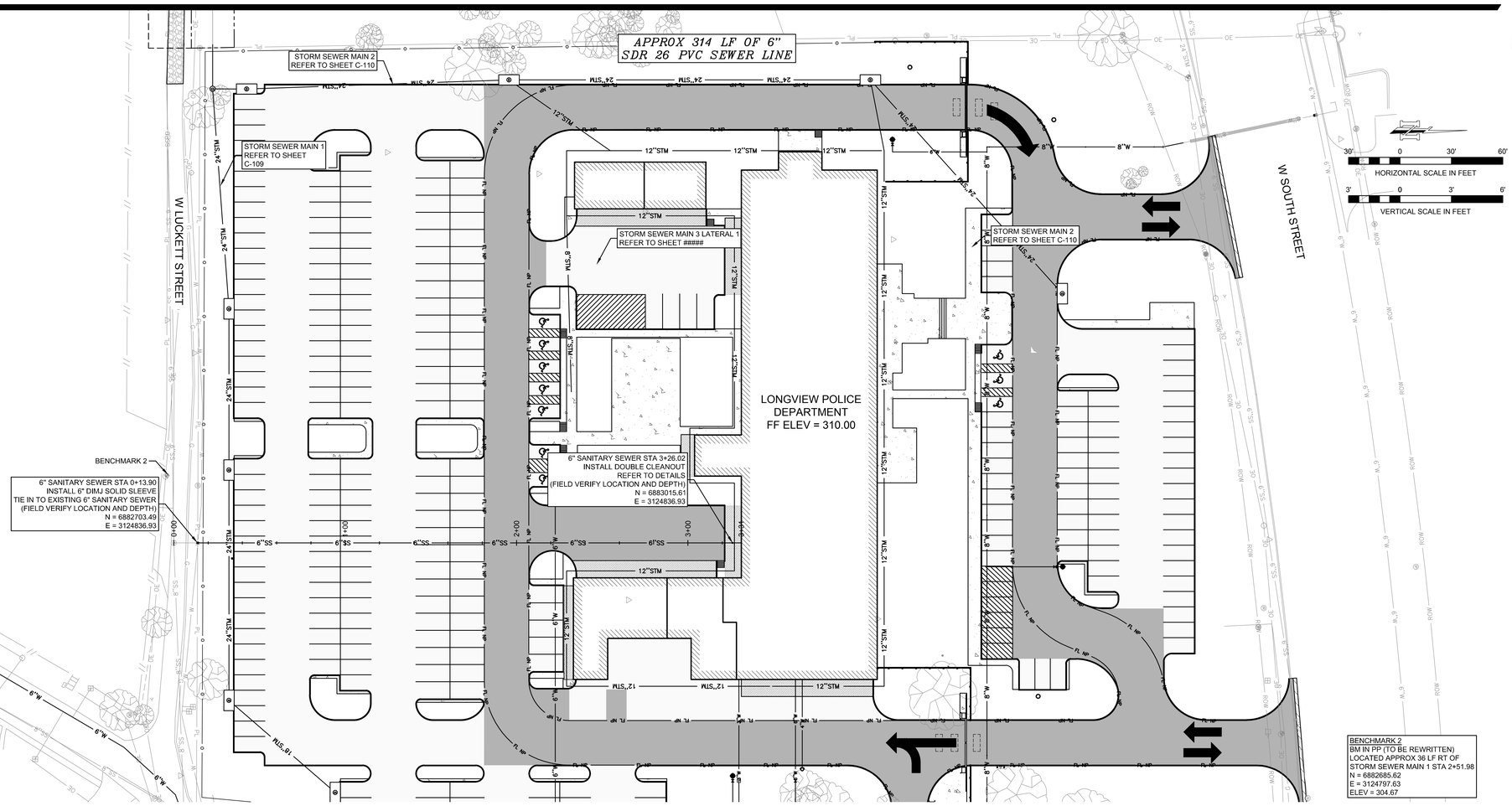

BENCHMARK 2
BM IN PP (TO BE REWRITTEN)
LOCATED APPROX 36 LF RT OF
STORM SEWER MAIN 1 STA 2+51.98
N = 6882685.62
E = 3124797.63
ELEV = 304.67

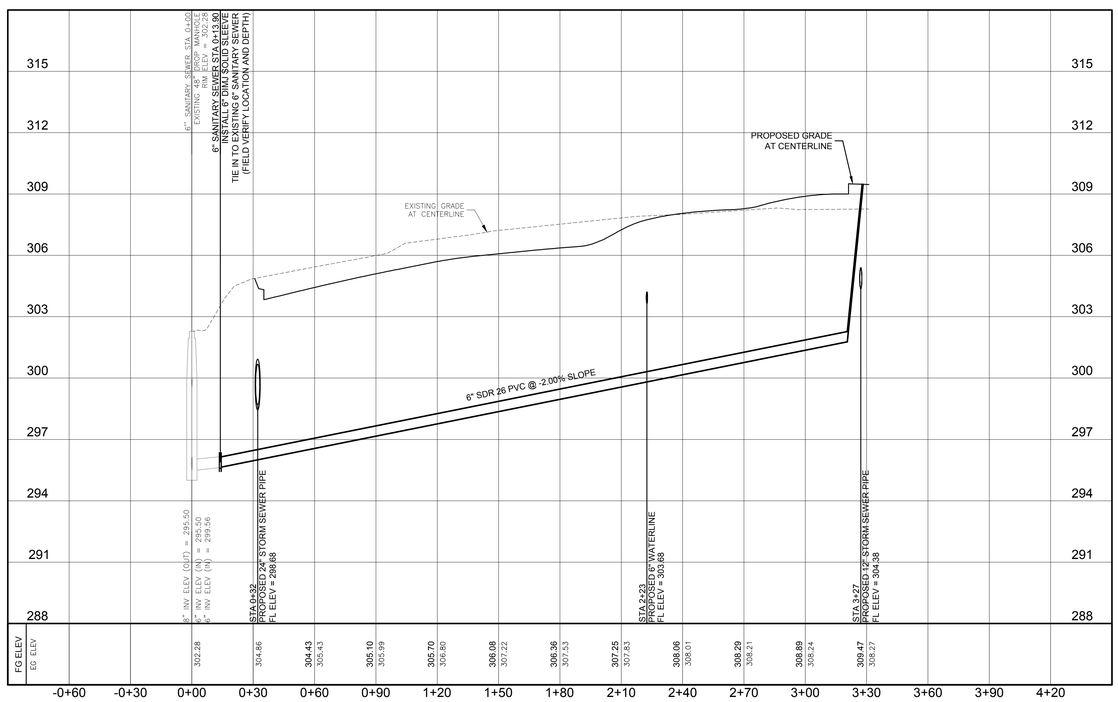

SANITARY SEWER NOTES:

1. INVERT FLOWLINE ELEVATIONS SHOWN ON THESE PLANS ARE FOR THE FLOWLINES AT THE CENTER OF THE PROPOSED MANHOLES. CONTRACTOR SHALL CONSTRUCT OR MANUFACTURE MANHOLE BOTTOMS WITH THE CORRECT INFLOW AND OUTFLOW ELEVATIONS AT THE GRADES OF CORRESPONDING INFLOW AND OUTFLOW PIPES.
2. CONTRACTOR SHALL FIELD VERIFY AND MATCH THE SIZE AND LOCATION AT ALL EXISTING SANITARY SEWER SERVICE LINES. THE PROPOSED SERVICES SHALL MATCH THE EXISTING CONNECTION LOCATION AND EITHER THE EXISTING SIZE OR AS SHOWN IN THE DETAILS.
3. CONTRACTOR SHALL FIELD VERIFY GRADE OF SANITARY SEWER SERVICE LINES PRIOR TO INSTALLATION AND SHALL MAKE ADJUSTMENTS AS NECESSARY TO AVOID CONFLICTS.

Architect: Brinkley Sargent Wigginton Architects (972) 960-9970
Landscape: Kendall Landscape Architecture (214) 739-3226
Structural: L.A. Fuess Partners, Inc (214) 593-1118
MEP: M-E Engineers (214) 741-1589
Civil: KSA Engineers, Inc (903) 236-7700
Technology: M-E Engineers (303) 421-6656

BRINKLEY SARGENT WIGINTON ARCHITECTS

LONGVIEW POLICE DEPARTMENT

518 W SOUTH ST. LONGVIEW, TEXAS 75601

HISTORY		
#	DATE	DESCRIPTION

STATE OF TEXAS — MICHAEL A. BURNS — 59990 — LICENSED PROFESSIONAL ENGINEER

SEAL 6/4/2020
TBPE Firm Registration No. F-1356

6" SANITARY SEWER PLAN AND PROFILE

21719
06/04/2020

C-111

BID ISSUE

© 2019 Brinkley Sargent Wigginton Architects, Inc.

!!! CAUTION !!!
EXISTING OVERHEAD UTILITIES IN VICINITY CONTRACTOR SHALL EXERCISE EXTREME CAUTION WHEN WORKING NEAR ELECTRIC FACILITIES

!!! WARNING !!!
THE ENGINEER ASSUMES NO RESPONSIBILITY FOR THE ACCURACY OF THE LOCATION OF UNDERGROUND UTILITIES. THE CONTRACTOR SHALL BE RESPONSIBLE FOR LOCATION AND AVOIDING ALL EXISTING UTILITIES BY CALLING THE "ONE CALL" LOCATOR SERVICE AT 1.800.344.8377 (DIG TESS) OR 1.800.245.4545 TEXAS ONE CALL AT LEAST 48 HOURS PRIOR TO CONSTRUCTION.

Texas811

APPROX 943 LF OF 8" AWWA C900 PVC WATERLINE

APPROX 320 LF OF 6" AWWA C900 PVC WATERLINE

APPROX 80 LF OF 6" AWWA C900 PVC FIRE LINE

APPROX 55 LF OF 4" AWWA C900 PVC FIRE DEPARTMENT CONNECTION LINE

APPROX 80 LF OF 3" HDPE WATERLINE

WATERLINE NOTES:

1. LOCATIONS OF EXISTING PIPELINES AND UTILITIES IN THE PROJECT AREA AS SHOWN ARE APPROXIMATE. THE CONTRACTOR SHALL FIELD VERIFY LOCATIONS, DEPTHS, AND SIZES OF ALL EXISTING PIPELINES AND UTILITIES AS REQUIRED FOR CONSTRUCTION.
2. CONTRACTOR SHALL FIELD VERIFY ROUTING OF PROPOSED WATERLINES PRIOR TO LAYING EACH LINE AND SHALL NOTIFY THE ENGINEER OF POTENTIAL CONFLICTS. THE CONTRACTOR SHALL REVISE THE PROPOSED WATERLINE ALIGNMENTS AS DETERMINED BY THE ENGINEER TO AVOID CONFLICTS WITH EXISTING PIPELINES AND UTILITIES AT NO ADDITIONAL COST.
3. CONTRACTOR SHALL PROVIDE ALL HORIZONTAL AND VERTICAL BENDS, AND OTHER FITTINGS AS REQUIRED TO CONSTRUCT THE PROPOSED WATERLINE AS SHOWN AND AS NECESSARY TO AVOID CONFLICTS WITH THE EXISTING PIPELINES AND UTILITIES, AND FOR CONSTRUCTION OF TIE - INS TO THE EXISTING DISTRIBUTION SYSTEM PIPING. COST ASSOCIATED WITH ANY ADJUSTMENTS TO THE PROPOSED WATERLINE TO AVOID CONFLICT WITH OBSTRUCTIONS SHALL BE SUBSIDIARY TO THE 8-IN WATER LINE BID ITEM.
4. CONTRACTOR SHALL THRUST BLOCK ALL HORIZONTAL AND VERTICAL BENDS ALONG THE PROPOSED WATERLINE.
5. CONTRACTOR SHALL FIELD VERIFY QUANTITY AND LOCATIONS OF ALL EXISTING WATER SERVICE CONNECTIONS TO BE REPLACED. THE CONTRACTOR SHALL INSTALL PROPOSED SERVICE LINES FROM THE PROPOSED WATER LINE TO THE EXISTING SERVICE METER.
6. PROPOSED SERVICES SHALL MATCH THE EXISTING CONNECTION SIZE AND LOCATION UNLESS SPECIFIED OR SHOWN OTHERWISE. CONTRACTOR SHALL REMOVE AND DISPOSE OF EXISTING WATER SERVICE LINES AS REQUIRED. ALL COST ASSOCIATED WITH REMOVAL AND DISPOSAL OF EXISTING WATER SERVICE LINES SHALL BE SUBSIDIARY TO THE RECONNECT EXISTING WATER SERVICE BID ITEM.
7. CONTRACTOR TO RESTORE ROADSIDE DITCH FOR POSITIVE DRAINAGE.

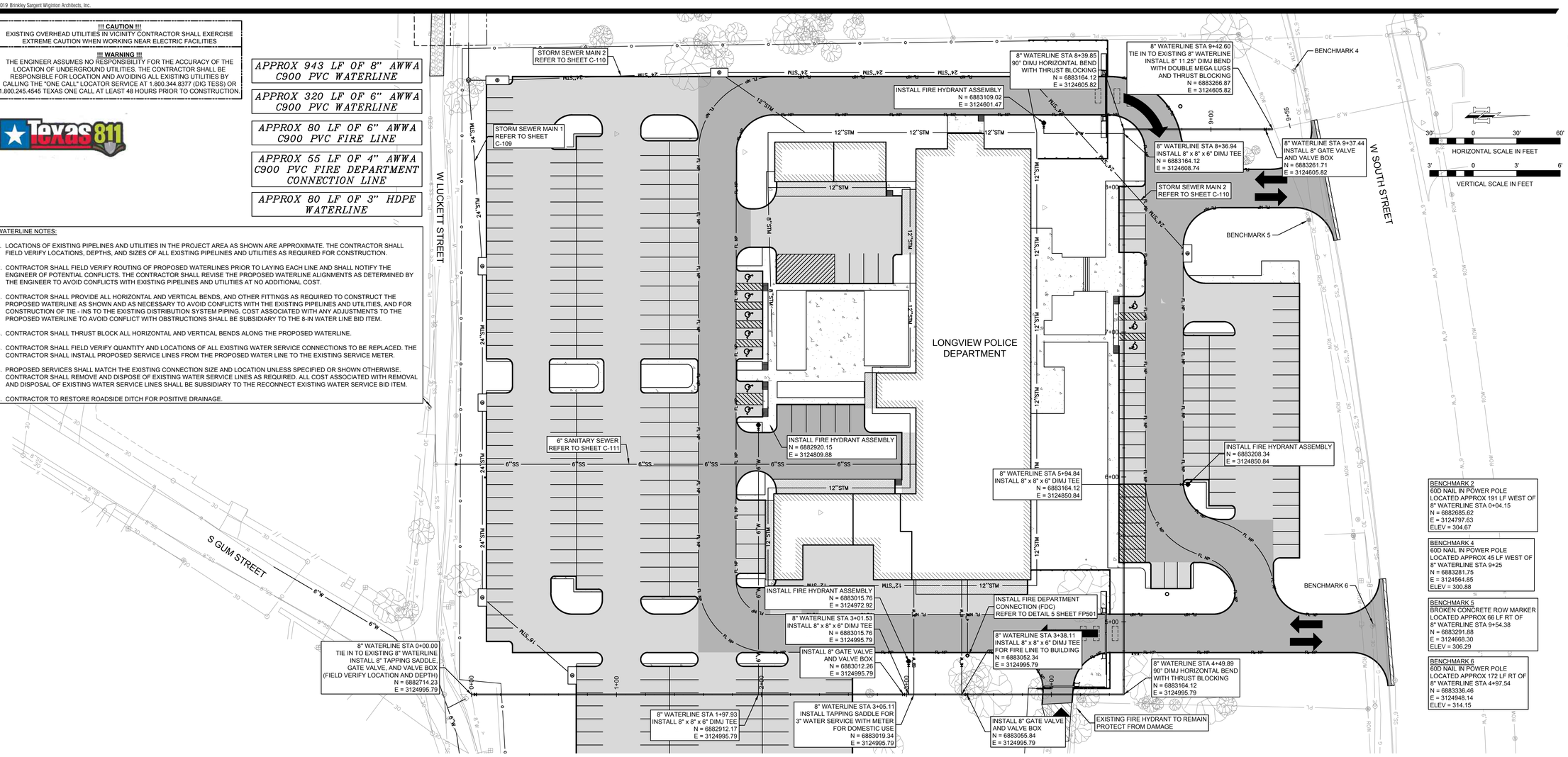

BENCHMARK 2
60D NAIL IN POWER POLE
LOCATED APPROX 191 LF WEST OF 8" WATERLINE STA 0+04.15
N = 6882685.62
E = 3124797.63
ELEV = 304.67

BENCHMARK 4
60D NAIL IN POWER POLE
LOCATED APPROX 45 LF WEST OF 8" WATERLINE STA 9+25
N = 6883281.75
E = 3124564.85
ELEV = 300.88

BENCHMARK 5
BROKEN CONCRETE ROW MARKER
LOCATED APPROX 66 LF RT OF 8" WATERLINE STA 9+54.38
N = 6883291.88
E = 3124668.30
ELEV = 306.29

BENCHMARK 6
60D NAIL IN POWER POLE
LOCATED APPROX 172 LF RT OF 8" WATERLINE STA 4+97.54
N = 6883336.46
E = 3124948.14
ELEV = 314.15

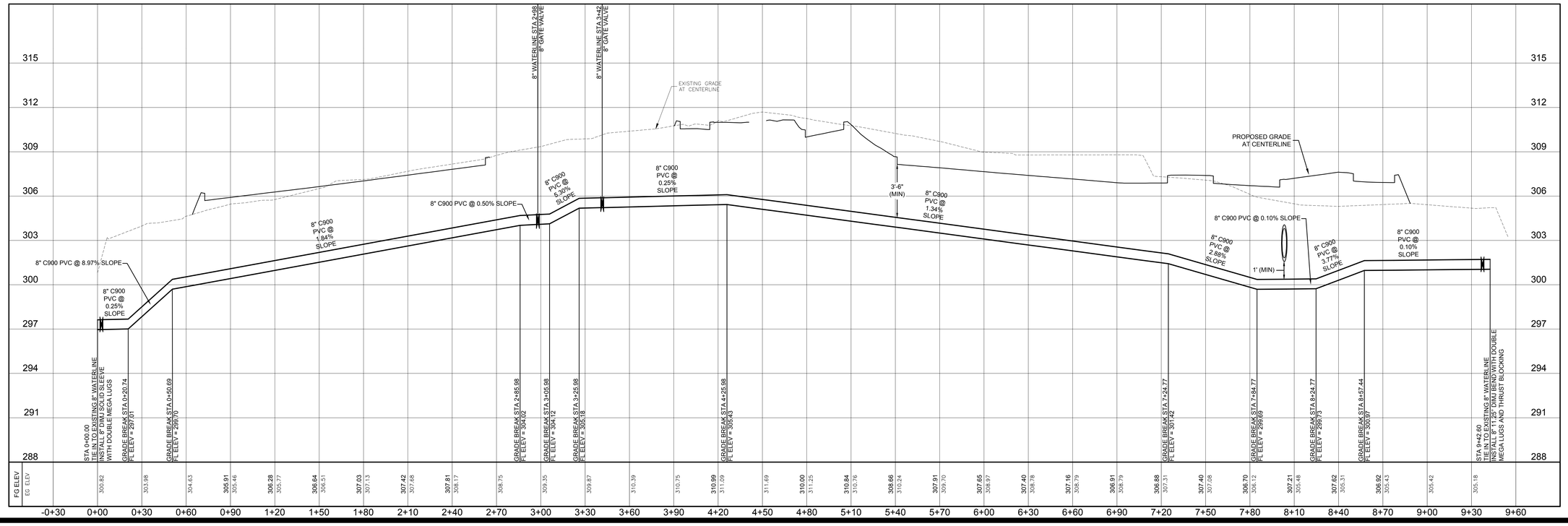

Architect: Brinkley Sargent Wigginton Architects (972) 960-9970
Landscape: Kendall Landscape Architecture (214) 739-3226
Structural: L.A. Fuess Partners, Inc (214) 593-1118
MEP: M-E Engineers (214) 741-1589
Civil: KSA Engineers, Inc (903) 236-7700
Technology: M-E Engineers (303) 421-6656

BRINKLEY SARGENT WIGGINTON ARCHITECTS

LONGVIEW POLICE DEPARTMENT

518 W SOUTH ST. LONGVIEW, TEXAS 75601

HISTORY

#	DATE	DESCRIPTION

STATE OF TEXAS
MICHAEL A. BURNS
59990
LICENSED
PROFESSIONAL ENGINEER

SEAL
TBPE Firm Registration No. F-1356

8" WATERLINE
PLAN AND PROFILE

21719
06/04/2020

C-112

BID ISSUE

© 2019 Brinkley Sargent Wigginton Architects, Inc.

!!! CAUTION !!!
EXISTING OVERHEAD UTILITIES IN VICINITY CONTRACTOR SHALL EXERCISE EXTREME CAUTION WHEN WORKING NEAR ELECTRIC FACILITIES

!!! WARNING !!!
THE ENGINEER ASSUMES NO RESPONSIBILITY FOR THE ACCURACY OF THE LOCATION OF UNDERGROUND UTILITIES. THE CONTRACTOR SHALL BE RESPONSIBLE FOR LOCATION AND AVOIDING ALL EXISTING UTILITIES BY CALLING THE "ONE CALL" LOCATOR SERVICE AT 1.800.344.8377 (DIG TESS) OR 1.800.245.4545 TEXAS ONE CALL AT LEAST 48 HOURS PRIOR TO CONSTRUCTION.

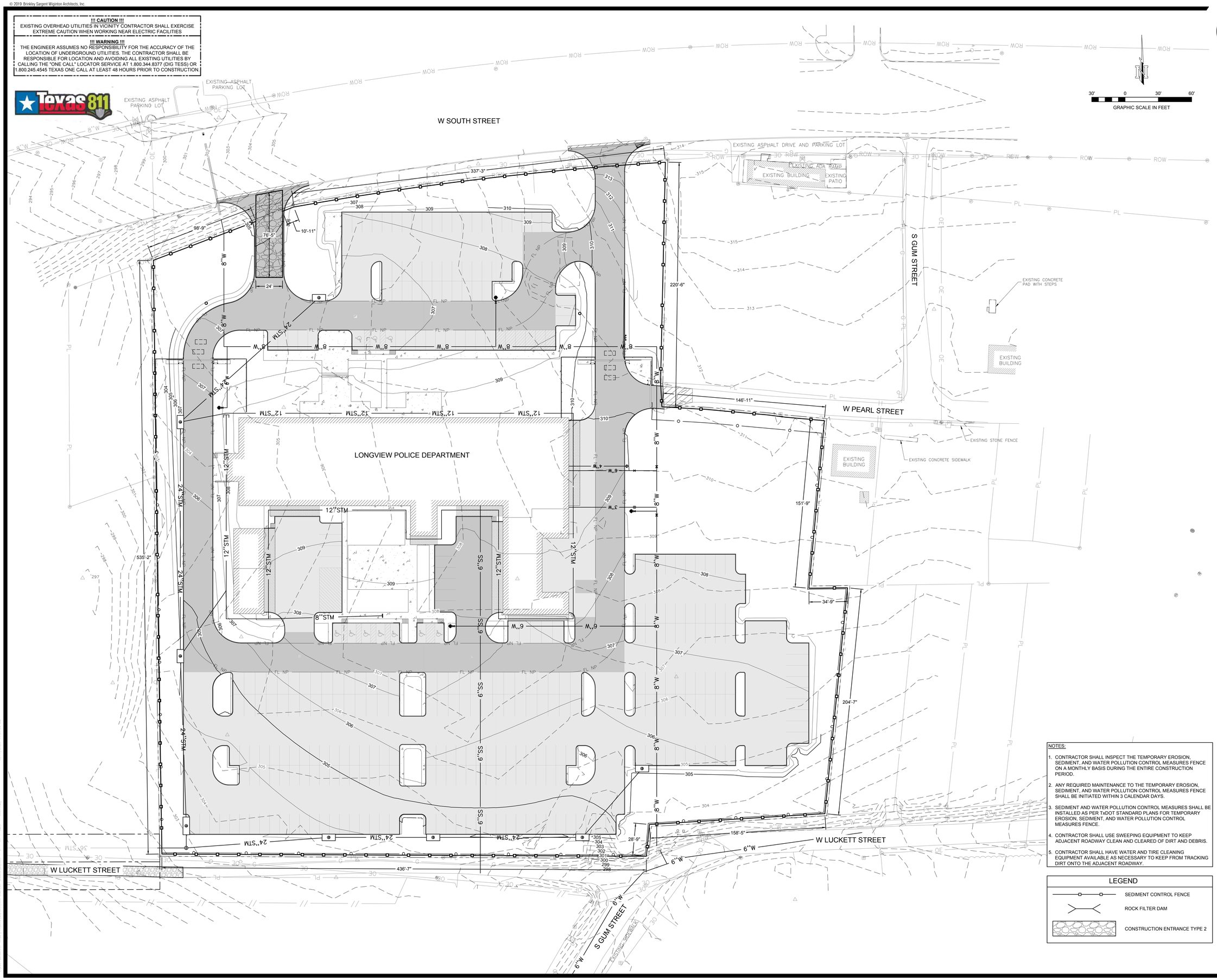

NOTES:

1. CONTRACTOR SHALL INSPECT THE TEMPORARY EROSION, SEDIMENT, AND WATER POLLUTION CONTROL MEASURES FENCE ON A MONTHLY BASIS DURING THE ENTIRE CONSTRUCTION PERIOD.
2. ANY REQUIRED MAINTENANCE TO THE TEMPORARY EROSION, SEDIMENT, AND WATER POLLUTION CONTROL MEASURES FENCE SHALL BE INITIATED WITHIN 3 CALENDAR DAYS.
3. SEDIMENT AND WATER POLLUTION CONTROL MEASURES SHALL BE INSTALLED AS PER TxDOT STANDARD PLANS FOR TEMPORARY EROSION, SEDIMENT, AND WATER POLLUTION CONTROL MEASURES FENCE.
4. CONTRACTOR SHALL USE SWEEPING EQUIPMENT TO KEEP ADJACENT ROADWAY CLEAN AND CLEARED OF DIRT AND DEBRIS.
5. CONTRACTOR SHALL HAVE WATER AND TIRE CLEANING EQUIPMENT AVAILABLE AS NECESSARY TO KEEP FROM TRACKING DIRT ONTO THE ADJACENT ROADWAY.

LEGEND

- SEDIMENT CONTROL FENCE
- ROCK FILTER DAM
- CONSTRUCTION ENTRANCE TYPE 2

Architect: Brinkley Sargent Wigginton Architects (972) 960-9970
Landscape: Kendall Landscape Architecture (214) 739-3226
Structural: L.A. Fuess Partners, Inc (214) 593-1118
MEP: M-E Engineers (214) 741-1589
Civil: KSA Engineers, Inc (903) 236-7700
Technology: M-E Engineers (303) 421-6656

BRINKLEY SARGENT WIGINTON ARCHITECTS

LONGVIEW POLICE DEPARTMENT

518 W SOUTH ST. LONGVIEW, TEXAS 75601

HISTORY

#	DATE	DESCRIPTION

STATE OF TEXAS
MICHAEL A. BURNS
59990
LICENSED
PROFESSIONAL ENGINEER

SEAL 06/04/2020
TBPE Firm Registration No. F-1356

EROSION CONTROL PLAN

21719
06/04/2020

C-113

BID ISSUE

© 2019 Brinkley Sargent Wigginton Architects, Inc.

!!! CAUTION !!!
EXISTING OVERHEAD UTILITIES IN VICINITY CONTRACTOR SHALL EXERCISE EXTREME CAUTION WHEN WORKING NEAR ELECTRIC FACILITIES

!!! WARNING !!!
THE ENGINEER ASSUMES NO RESPONSIBILITY FOR THE ACCURACY OF THE LOCATION OF UNDERGROUND UTILITIES. THE CONTRACTOR SHALL BE RESPONSIBLE FOR LOCATION AND AVOIDING ALL EXISTING UTILITIES BY CALLING THE "ONE CALL" LOCATOR SERVICE AT 1.800.344.8377 (DIG TESS) OR 1.800.245.4545 TEXAS ONE CALL AT LEAST 48 HOURS PRIOR TO CONSTRUCTION.

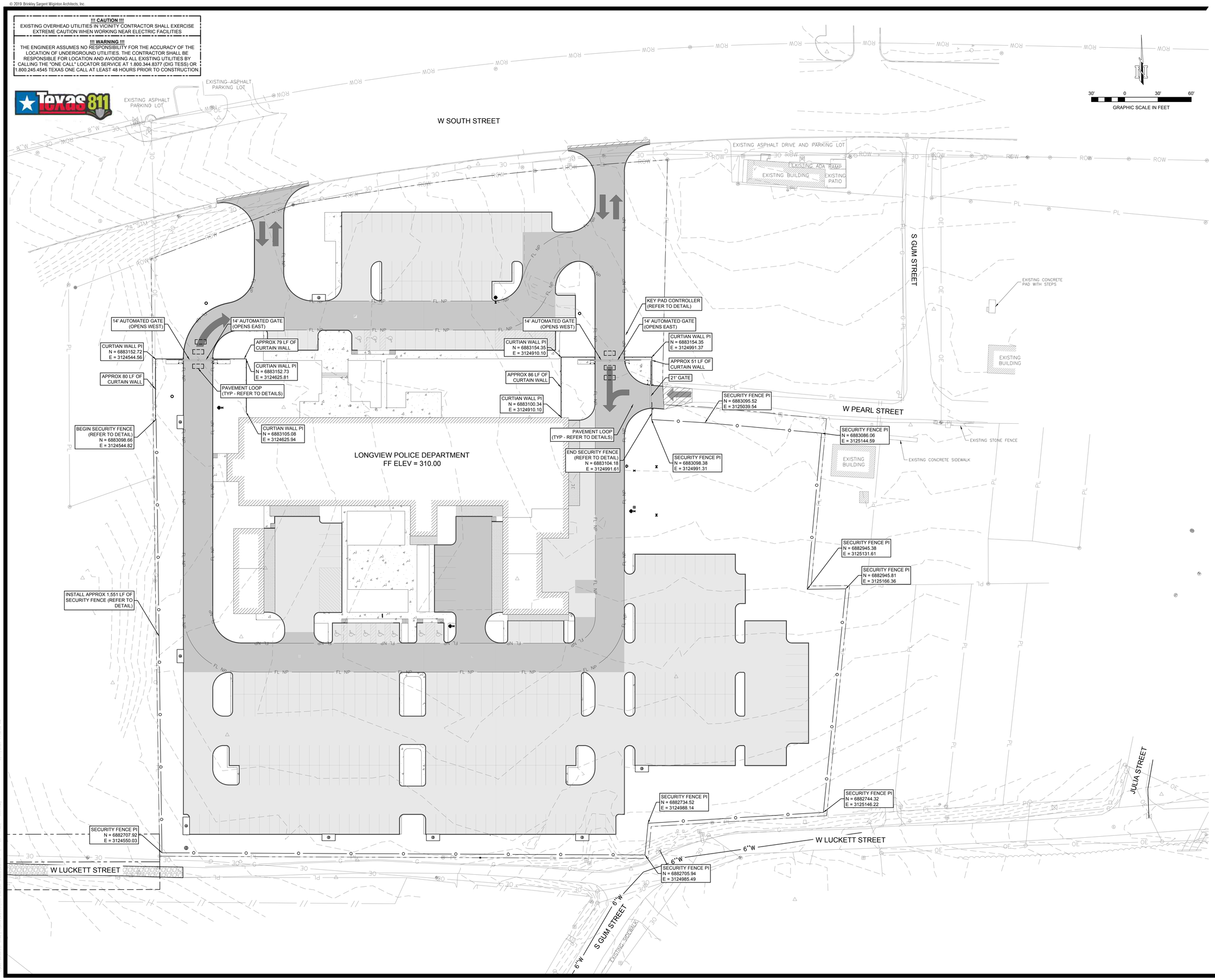

Architect: Brinkley Sargent Wigginton Architects (972) 960-9970
Landscape: Kendall Landscape Architecture (214) 739-3226
Structural: L.A. Fuess Partners, Inc (214) 593-1118
MEP: M-E Engineers (214) 741-1589
Civil: KSA Engineers, Inc (903) 236-7700
Technology: M-E Engineers (303) 421-6656

BRINKLEY SARGENT WIGINTON ARCHITECTS

LONGVIEW POLICE DEPARTMENT

518 W SOUTH ST. LONGVIEW, TEXAS 75601

HISTORY		
#	DATE	DESCRIPTION

STATE OF TEXAS
MICHAEL A. BURNS
59990
REGISTERED PROFESSIONAL ENGINEER

SEAL 06/04/2020
TBPE Firm Registration No. F-1356

FENCING AND GATE PLAN

21719
06/04/2020

C-114

BID ISSUE

© 2019 Brinkley Sargent Wigginton Architects, Inc.

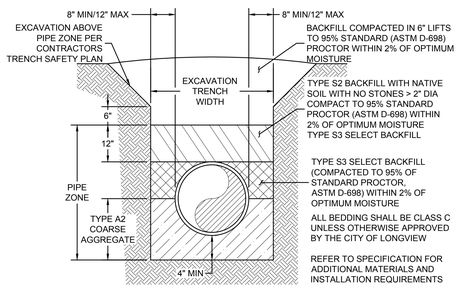

TYPE A2	ANGULAR 3/4" TO 1" CRUSHED ROCK OR NATURAL STONE MEETING THE REQUIREMENTS OF ATM C-33 No. 57. EMBEDMENT MATERIAL SHALL BE CLEAN, WASHED, SOUND, DURABLE, AND WELL GRADED.
TYPE S2	GRADED FREE OF LUMPS LARGER THAN 3", ROCKS LARGER THAN 2", EXCESSIVE SILTS, AND DEBRIS. DO NOT USE SOIL CONTAINING BRUSH, ROOTS, OR SIMILAR ORGANIC MATTER. CONFORMING TO ASTM D2487 CLASS II OR CLASS III SOILS WITH A LIQUID LIMIT LESS THAN 40, AND THE PLASTICITY INDEX LESS THAN 20, BUT GREATER THAN 4.
TYPE S3	CLAYEY SAND SOILS FREE FROM ORGANIC MATTER WITH NO LUMPS LARGER THAN 1", NO ROCKS LARGER THAN 1/2", NOR EXCESSIVE SILTS. DO NOT USE SOILS CONTAINING BRUSH, ROOTS, SOD, OR OTHER ORGANIC MATERIALS. SELECT FILL SHALL CONFORM TO ASTM D2487 CLASS II OR CLASS III AND SHALL HAVE A LIQUID LIMIT LESS THAN 30 WITH PLASTICITY INDEX LESS THAN 15, BUT GREATER THAN 4.

UTILITY LINE INSTALLATION CLASS C EMBEDMENT

NTS

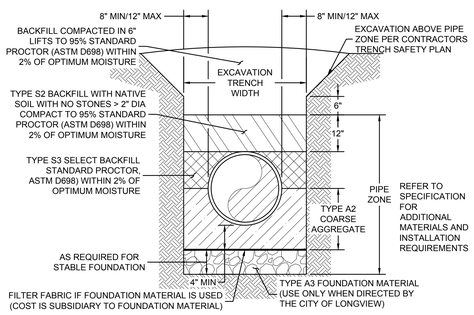

TYPE A2	ANGULAR 3/4" TO 1" CRUSHED ROCK OR NATURAL STONE MEETING THE REQUIREMENTS OF ATM C-33 NO. 57. EMBEDMENT MATERIAL SHALL BE CLEAN, WASHED, SOUND, DURABLE, AND WELL GRADED.
TYPE A3	COARSE STONE OR CRUSHED GRAVEL. FOUNDATION MATERIAL SHALL BE PIT RUN ANGULAR CRUSHED, NATURAL WASHED STONE FREE OF SHALE, CLAY, FRIABLE MATERIAL AND DEBRIS; WELL GRADED BETWEEN 1" AND 3" IN SIZE, WITH A MINIMUM OF 90% RETAINED ON A 1" SIEVE.
TYPE S2	GRADED FREE OF LUMPS LARGER THAN 3", ROCKS LARGER THAN 2", EXCESSIVE SILTS, AND DEBRIS. DO NOT USE SOIL CONTAINING BRUSH, ROOTS, OR SIMILAR ORGANIC MATTER. CONFORMING TO ASTM D2487 CLASS II OR CLASS III SOILS WITH A LIQUID LIMIT LESS THAN 40, AND THE PLASTICITY INDEX LESS THAN 20, BUT GREATER THAN 4.
TYPE S3	CLAYEY SAND SOILS FREE FROM ORGANIC MATTER WITH NO LUMPS LARGER THAN 1", NO ROCKS LARGER THAN 1/2", NOR EXCESSIVE SILTS. DO NOT USE SOILS CONTAINING BRUSH, ROOTS, SOD, OR OTHER ORGANIC MATERIALS. SELECT FILL SHALL CONFORM TO ASTM D2487 CLASS II OR CLASS III AND SHALL HAVE A LIQUID LIMIT LESS THAN 30 WITH PLASTICITY INDEX LESS THAN 15, BUT GREATER THAN 4.

UTILITY LINE INSTALLATION CLASS D EMBEDMENT

NTS

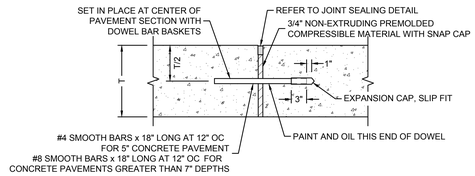

NOTES:

1. DOWEL BARS SHALL BE SPACED AT 12" OC AND SHALL BE OFFSET 18" FROM LONGITUDINAL JOINT INTERSECTIONS.
2. BENT, BROKEN, OR MISSING BARS SHALL BE REPLACED WITH NEW BARS. DRILL AND EPOXY BARS IN PLACE AS DIRECTED BY THE CITY OF LONGVIEW.
3. DOWEL PLACEMENT TOLERANCE SHALL BE ±1/4" HORIZONTALLY AND VERTICALLY. REMOVE SHIPPING WIRES FROM DOWEL BAR BASKETS PRIOR TO CEMENT PLACEMENT.

TRANSVERSE EXPANSION JOINTS

NTS

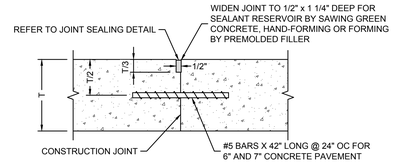

NOTES:

1. TIE BARS SHALL BE GRADE 60 DEFORMED BARS WITH A MAXIMUM SPACING OF 24" OC AND SHALL BE OFFSET 18" FROM TRANSVERSE JOINT IN INTERSECTIONS.
2. BENT BARS SHALL BE STRAIGHTENED. BROKEN OR MISSING BARS SHALL BE REPLACED WITH NEW BARS. DRILL AND EPOXY REPLACEMENT BARS IN PLACE AS DIRECTED BY THE CITY OF LONGVIEW.
3. TIE BARS SHALL NOT BE PAINTED, GREASED, OR ENCLOSED IN SLEEVES.

LONGITUDINAL CONSTRUCTION JOINT

NTS

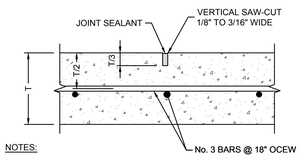

NOTES:

SAWED CONTRACTION JOINTS WILL BE SPACED AT 10' MAXIMUM ON 5" CONCRETE PAVEMENT AND 15' MAXIMUM ON 8" CONCRETE PAVEMENT.

SAWED CONTRACTION JOINT

NTS

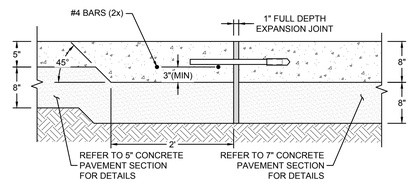

THICKENED EDGE DETAIL

NTS

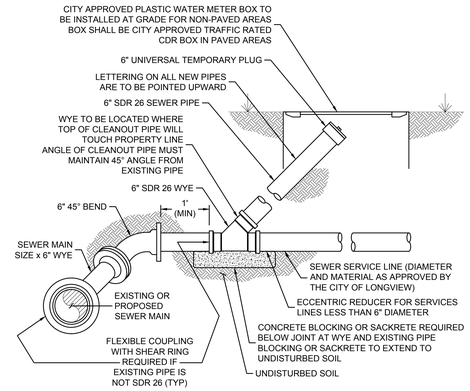

NOTES:

1. BEVEL OF ENDS OF PIPE PRIOR TO INSERTING IN FITTINGS (TYP).
2. ALL PIPE AND FITTINGS SHALL BE SDR 26.
3. CLEANOUTS SHALL BE INSTALLED AS REQUIRED BY THE CITY OF LONGVIEW.
4. SERVICE CONNECTION AT MAIN AND CLEAN OUT SHALL BE MINIMUM 6" DIAMETER FOR 4" SERVICES. FOR SERVICE LINES LARGER THAN 4" DIAMETER, SERVICE CONNECTION AT THE MAIN SHALL BE MADE AS A MANHOLE CONSTRUCTED AT THE MAIN.
5. DISTURBED SOILS SHALL BE COMPACTED TO 95% STANDARD PROCTOR WITHIN 2% OF OPTIMUM MOISTURE IN 6" LIFTS OR SMALLER.
6. PROVIDE AND INSTALL ECCENTRIC REDUCER AT BASE OF CLEANOUT RISER FOR EXISTING SERVICES LESS THAN 6" DIAMETER AND INSTALL 4" WYE IN SERVICE LINE.
7. ALL MATERIALS SHALL BE FROM THE LATEST VERSION OF THE CITY OF LONGVIEW APPROVED UTILITY PRODUCTS LISTS.

SANITARY SEWER CLEANOUT

NTS

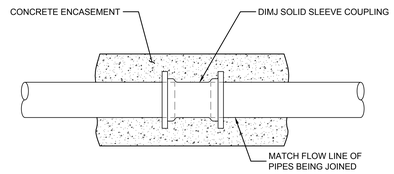

NOTES:

1. USE TRANSITION GASKETS BETWEEN PIPE TYPES WHEN POSSIBLE.
2. BLOCK PIPES CAREFULLY PRIOR TO CONCRETE ENCASEMENT TO ENSURE ACCURATE PIPE ALIGNMENT.
3. COMPLETED JOINT MUST BE ABLE TO PASS MANDREL TESTING.

SEWER LINE TRANSITION COUPLING

NTS

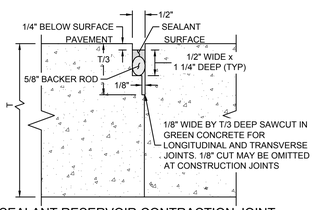

SEALANT RESERVOIR CONTRACTION JOINT, TRANSVERSE JOINT, CONSTRUCTION JOINT

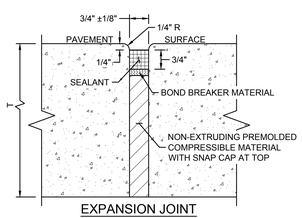

EXPANSION JOINT

NOTE:

LONGITUDINAL AND TRANSVERSE JOINTS SHALL BE A MINIMUM OF 1/8" WIDE FOR 1/3 OF THE PAVEMENT THICKNESS.

JOINT SEALING

NTS

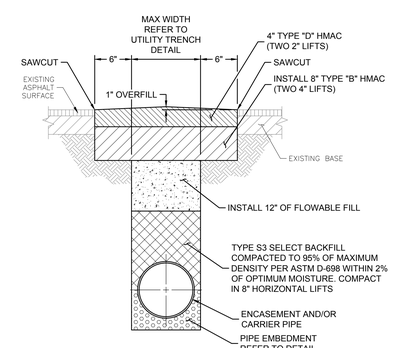

NOTE:

PROVIDE CRS-2H TACK COAT AT A RATE OF 0.10 GALLON PER SQUARE YARD BETWEEN EACH ASPHALT LIFT.

SAWCUT AND REPAIR ASPHALT ROAD PAVEMENT

NTS

BRINKLEY SARGENT WIGINTON ARCHITECTS
Architect: Brinkley Sargent Wigginton Architects (972) 960-9970
Landscape: Kendall Landscape Architecture (214) 739-3226
Structural: L.A. Fuess Partners, Inc (214) 593-1118
MEP: M-E Engineers (214) 741-1589
Civil: KSA Engineers, Inc (903) 236-7700
Technology: M-E Engineers (303) 421-6656

LONGVIEW POLICE DEPARTMENT

518 W SOUTH ST. LONGVIEW, TEXAS 75601

HISTORY		
#	DATE	DESCRIPTION

STATE OF TEXAS — MICHAEL A. BURNS — 59990 — LICENSED PROFESSIONAL ENGINEER
SEAL 06/04/2020
TBPE Firm Registration No. F-1356

MISCELLANEOUS DETAILS I

BID ISSUE

21719
06/04/2020
C-115

© 2019 Brinkley Sargent Wiginton Architects, Inc.

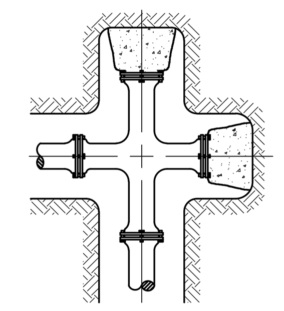

TYPICAL SECTION OF CROSS AND 2 PLUG BLOCKING
(WHEN DIRECTED BY CITY OF LONGVIEW)

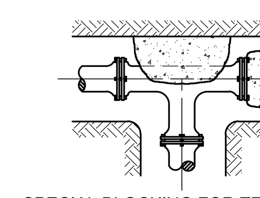

SPECIAL BLOCKING FOR TEE WITH PLUG
(WHEN DIRECTED BY CITY OF LONGVIEW)

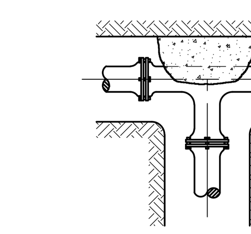

BLOCKING FOR TEE

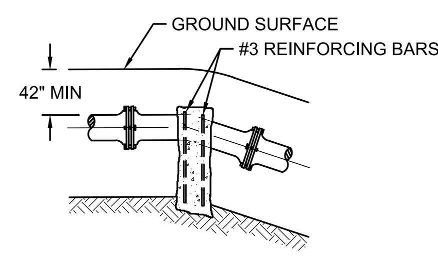

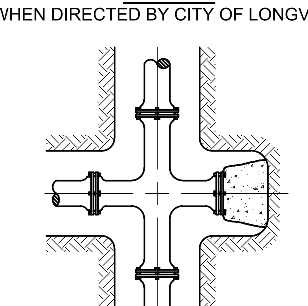

TYPICAL SECTION OF CROSS AND BLOCKING
(WHEN DIRECTED BY CITY OF LONGVIEW)

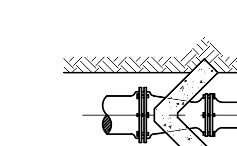

THRUST SUPPORT FOR REDUCER CONNECTION
(SIZE TO BE DETERMINED BY CITY OF LONGVIEW)

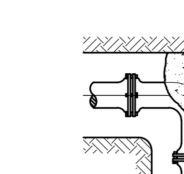

TYPICAL BLOCKING FOR HORIZONTAL BENDS

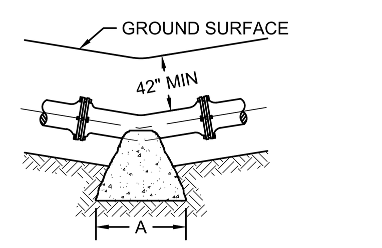

TYPICAL BLOCKING FOR VERTICAL BENDS

PIPE SIZE	TEES THRUST BLOCKING REQ'D (SF)	BENDS 90° THRUST BLOCKING REQ'D (SF)	BENDS 45° THRUST BLOCKING REQ'D (SF)	BENDS 22 1/2° THRUST BLOCKING REQ'D (SF)	REDUCER PIPE SIZE (IN)	REDUCER ANGLE (THETA)	REDUCER THRUST BLOCKING REQ'D (SF)
2 1/2"	0.61	0.43	0.23	0.12	4 - 3	8.2	0.05
3"	0.88	0.62	0.34	0.17	6 - 3	19.5	0.45
4"	1.57	1.11	0.60	0.31	6 - 4	12.8	0.22
6"	3.53	2.50	1.35	0.69	8 - 6	10.5	0.25
8"	6.28	4.44	2.40	1.23	10 - 8	9.6	0.30
10"	9.82	6.94	3.76	1.92	12 - 10	8.2	0.31
12"	14.14	10.00	5.41	2.76	14 - 12	7.2	0.32
14"	19.24	13.61	7.36	3.75	18 - 12	18.4	2.83
16"	25.13	17.77	9.62	4.90	20 - 14	17.5	3.04
18"	31.81	22.49	12.17	6.21	20 - 16	11.5	1.42
20"	39.27	27.77	15.03	7.66	24 - 18	14.5	3.12
24"	56.55	39.99	21.64	11.03	24 - 20	9.6	1.44
30"	88.36	62.48	33.81	17.24	30 - 20	19.5	8.30
36"	127.23	89.97	48.69	24.82	30 - 24	11.5	3.20

NOTES ON THRUST BLOCKING:

1. ALL BLOCKING SHALL BE AGAINST UNDISTURBED HAND DUG SOIL AND SHALL BE CONCRETE HAVING A MINIMUM 28 DAY COMPRESSIVE STRENGTH OF 3,000 PSI.
2. THRUST CALCULATIONS TO BE BASED ON THRUST DUE TO WATER PRESSURE AT 100% OF TEST PRESSURE.
3. VERTICAL UPLIFT BLOCKS SHALL BE DESIGNED ON THE BASIS OF 150 LBS PER CU FT FOR CONCRETE AND SOIL AT 120 LBS PER CU FT OVER THE AREA OF BLOCK.
4. VERTICAL DOWN THRUST BLOCKS SHALL BE DESIGNED ON THE BASIS OF 3,000 LBS PER SQ FT ALLOWABLE SOIL BEARING PRESSURE. DIMENSIONS MAY BE DECREASED WITH APPROVAL OF THE CITY OF LONGVIEW OR MEASURED SOIL CONDITIONS. IN POOR SOIL CONDITIONS, BLOCK DIMENSIONS SHALL BE INCREASED IN PROPORTION TO ALLOWABLE BEARING VALUE.
5. THRUST BLOCKS ON HORIZONTAL BENDS, TEES, CROSSES, AND REDUCERS SHALL BE SIZED BASED ON 2,400 LBS PER SQ FT OF BLOCKING SURFACE AREA IN CONTACT WITH UNDISTURBED SOIL, BLOCK DIMENSIONS MAY BE DECREASED WITH APPROVAL OF THE CITY OF LONGVIEW OR MEASURED SOIL CONDITIONS. IN POOR SOIL CONDITIONS, BLOCK DIMENSIONS SHALL BE INCREASED IN PROPORTION TO THE ALLOWABLE BEARING VALUE.
6. ALL BLOCKING SHALL HAVE A MINIMUM SOIL COVER OF TWO FEET.
7. ADDITIONAL REINFORCING MAY BE REQUIRED FOR HORIZONTAL BLOCKING TO HANDLE UNUSUAL SHEAR LOADING CONDITIONS.
8. ANCHOR COLLARS SHALL BE REINFORCED IN ACCORDANCE WITH REINFORCING BAR SCHEDULE FOR REDUCED BLOCKS SHOWN ABOVE. STEEL ANCHOR RING IN ACCORDANCE WITH DIMENSIONS OF ANCHOR COLLAR.

THRUST BLOCKING DETAILS

NTS

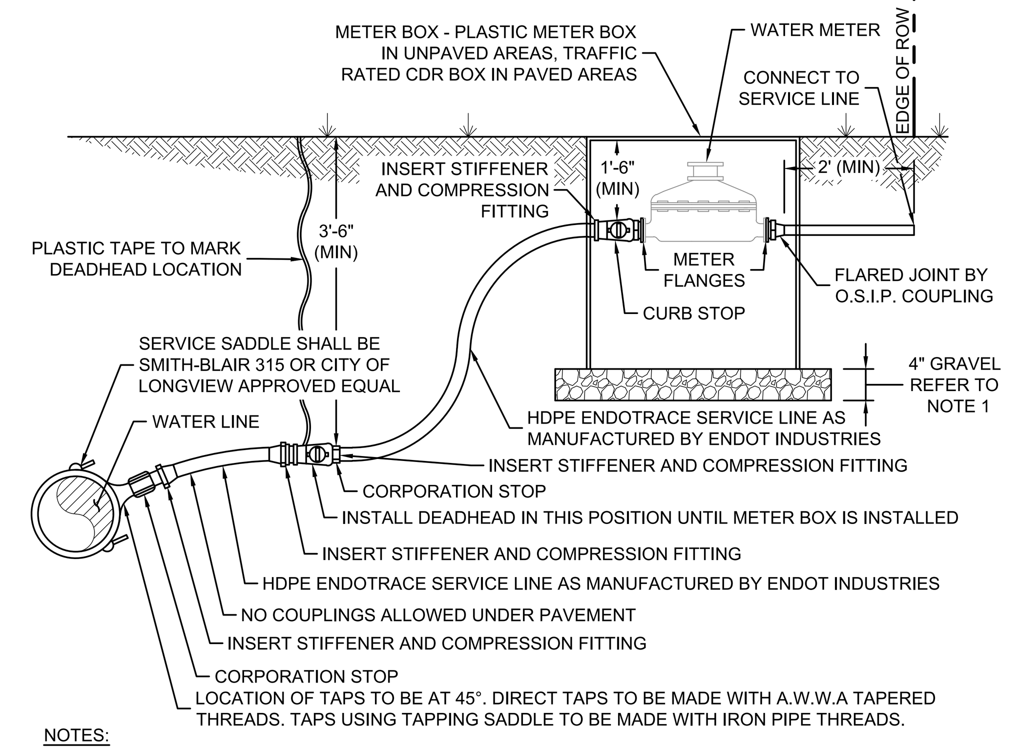

NOTES:

1. 3/4" TO 1" CRUSHED ROCK OR NATURAL STONE MEETING THE REQUIREMENTS OF ATM C-33 No. 57. ROCK MATERIAL SHALL BE CLEAN, WASHED, SOUND, DURABLE, AND WELL GRADED.
2. METER BOX - FROM CITY OF LONGVIEW APPROVED PRODUCT LIST: PLASTIC METER BOX SHALL BE INSTALLED OUTSIDE OF DRIVEWAYS, SIDEWALKS, OR PAVEMENT. METER BOXES LOCATED IN DRIVEWAYS, SIDEWALKS, OR PAVEMENT SHALL BE PRE-FAB FIBERCRETE BOX WITH COVER AS MANUFACTURED BY CDR (HUBBELL POWER SYSTEMS, INC.) A221118501050 WATER OR CITY OF LONGVIEW APPROVED EQUAL.
3. NEW METER FITTINGS SHALL HAVE FLARED CONNECTIONS.
4. ALL FITTINGS SHALL BE IN ACCORDANCE WITH AWWA C-800. NO-LEAD BRASS SHALL CONTAIN NO MORE THAN ONE FIFTH (0.20% OR LESS) TOTAL LEAD CONTENT BY WEIGHT.
5. ALL MATERIALS, PIPE, TUBING, METER BOX, COVER, AND FITTINGS SHALL BE NEW.
6. ALL MATERIALS SHALL BE AS LISTED ON THE CITY OF LONGVIEW APPROVED PRODUCTS LIST - LATEST VERSION.
7. PERMIT REQUIRED FOR CONNECTION TO EXISTING WATERLINE.
8. WATERLINE TAP SHALL BE MADE BY THE CITY OF LONGVIEW OR APPROVED CONTRACTOR. TAP SHALL BE INSPECTED BY CITY OF LONGVIEW.
9. WATER METER SHALL BE SET BY THE CITY OF LONGVIEW. METER APPLICATION AND FEE REQUIRED. METER SET INSPECTION REQUIRED.

WATER SERVICE 3-IN

NTS

NOTES:

1. ALL CONCRETE PAVEMENT SHALL HAVE MONOLITHIC CURB UNLESS OTHERWISE APPROVED BY THE CITY OF LONGVIEW.
2. TREATED SUBGRADE SHALL EXTEND 2' BEYOND THE PROPOSED BACK OF CURB FOR CURBED PAVEMENT SECTION AND 2' BEYOND THE EDGE OF PAVEMENT FOR NON-CURBED PAVEMENT.

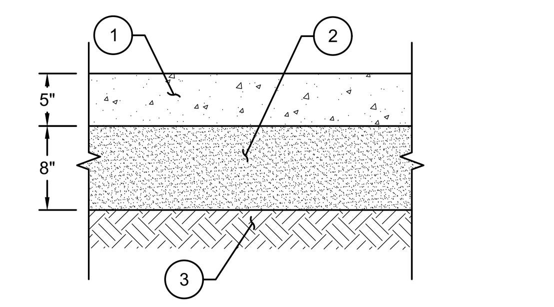

MARK	DESCRIPTION
1	5" REINFORCED PORTLAND CEMENT CONCRETE, TxDOT ITEM 360 (2014 EDITION), CLASS P, MINIMUM 3,200 PSI COMPRESSIVE STRENGTH AT 7 DAYS AND A MINIMUM 4,000 PSI COMPRESSIVE STRENGTH AT 28 DAYS WITH No. 3 BARS ON 18 INCH SPACING (OR No. 4 BARS ON 24 INCH SPACING), CENTER TO CENTER, EACH WAY (MAXIMUM 15-FOOT JOINT SPACING). ALL COARSE AGGREGATE SHALL CONSIST OF CRUSHED STONE.
2	AN EIGHT (8) INCH THICK TREATED SUBGRADE SHOULD BE PROVIDED IN ALL PAVEMENT AREAS TO PROVIDE A STABLE WORKING PLATFORM FOR NEW PAVEMENT CONSTRUCTION AND IMPROVE THE LONG TERM PERFORMANCE OF THE PAVEMENT SECTIONS. THE SELECTED ALTERNATIVE (LIME VERSUS CEMENT) SHOULD BE BASED ON THE PREDOMINANT SOILS EXPOSED AT THE SUBGRADE ELEVATION DURING CONSTRUCTION. ISOLATED AREAS CONTAINING SUBGRADE MATERIALS NOT CONSISTENT WITH THE PREDOMINANT SUBGRADE SOILS SHOULD BE REMOVED AND REPLACED WITH MATERIALS SIMILAR TO THE MATERIALS PREDOMINANT THROUGHOUT THE RESPECTIVE SITE. SUBGRADE TREATMENT (LIME OR CEMENT) SHALL CONSIST THROUGHOUT LARGE PORTIONS OF THE SITE. LIME TREATMENT OF SMALL SECTIONS OF CLAYEY SUBGRADE SOILS, AND CEMENT TREATMENT OF SMALL SECTIONS OF SANDY SUBGRADE SOILS THROUGHOUT THE SITE SHOULD NOT BE ALLOWED IN ORDER TO PROVIDE A RELATIVELY UNIFORM SUBGRADE SOIL CONDITION FOR NEW PAVEMENT CONSTRUCTION. IF THE PREDOMINANT SUBGRADE SOILS THROUGHOUT THE AREA CONSIST OF CLAYEY SUBGRADE SOILS (HAVING A PLASTICITY INDEX (PI) GREATER THAN 15), THE TREATED SUBGRADE INDICATED ABOVE FOR RESPECTIVE PAVEMENT SECTIONS SHALL CONSIST OF A LIME TREATED SUBGRADE, TxDOT ITEM 260 (2014 EDITION). A MINIMUM OF SIX PERCENT (6%) HYDRATED LIME BY DRY WEIGHT (MINIMUM 42 POUNDS PER SQUARE YARD) SHOULD BE USED TO TREAT SANDY CLAY SOILS HAVING A PLASTICITY INDEX (PI) BETWEEN 16 AND 25, A MINIMUM OF EIGHT PERCENT (8%) HYDRATED LIME BY DRY WEIGHT (MINIMUM 54 POUNDS PER SQUARE YARD) SHOULD BE USED TO TREAT CLAY SOILS HAVING A PLASTICITY INDEX (PI) OF 26 OR MORE. THE LIME TREATED SUBGRADE SOILS SHOULD BE COMPACTED TO A MINIMUM OF 95% STANDARD PROCTOR DENSITY (ASTM D698), AT A MOISTURE CONTENT WITHIN THREE PERCENT POINTS (±3%) OF OPTIMUM MOISTURE. IF THE PREDOMINANT SUBGRADE SOILS THROUGHOUT THE AREA CONSIST OF NON-PLASTIC (PI=0) TO LOW PLASTICITY SANDY AND/OR SILTY SUBGRADE SOILS (HAVING A PLASTICITY INDEX (PI) OF 15 OR LESS), THE TREATED SUBGRADE INDICATED ABOVE FOR THE RESPECTIVE PAVEMENT SECTIONS SHALL CONSIST OF A CEMENTED TREATED SUBGRADE, TxDOT ITEM 275 (2014 EDITION). A MINIMUM OF FOUR (4%) TYPE I, TYPE II OR TYPE I/II PORTLAND CEMENT BY DRY WEIGHT (MINIMUM 30 POUNDS PER SQUARE YARD), COMPACTED TO A MINIMUM OF 95% STANDARD PROCTOR DENSITY (ASTM D698), AT A MOISTURE CONTENT RANGING FROM FOUR PERCENTAGE POINTS BELOW TO ONE PERCENTAGE POINT ABOVE THE OPTIMUM MOISTURE VALUE (-4% TO +1%) SHOULD BE USED TO TREAT ALL SANDY AND/OR SILTY SOILS HAVING A PLASTICITY INDEX (PI) OF 15 OR LESS.
3	REMOVE ALL VEGETATION AND DEBRIS PRIOR TO BEGINNING EMBANKMENT. SCARIFY GROUND SURFACE TO 8" AND COMPACT TO 95% OF MAXIMUM DENSITY PER ASTM D-698 STANDARD PROCTOR. PROOF ROLL COMPACTED SUBGRADE PER TxDOT ITEM 216 PRIOR TO PLACEMENT OF EMBANKMENT TO DETECT ANY AREAS OF WEAKNESS AND REPLACE WITH FOUNDATION MATERIAL AS DIRECTED BY THE CITY OF LONGVIEW. DURING COMPACTION, THE MOISTURE CONTENT OF THE SOIL SHALL BE AS FOLLOWS:

SOIL DESCRIPTION COMPACTION	PLASTICITY INDEX (PI)	MOISTURE CONTENT AT TIME OF
NON-PLASTIC SILTY SAND SOILS	PI<15	+/- 3%
SANDY CLAY SOILS	15<PI<25	-1% TO +3%
CLAY SOILS	PI>25	-1% TO +3%

INSTALL FILL FOR EMBANKMENT IN 8" LIFTS, COMPACTED IN HORIZONTAL LIFTS TO A MINIMUM OF 95% OF MAXIMUM DENSITY PER ASTM D-698 STANDARD PROCTOR. MOISTURE CONTENT SHALL BE AS DESCRIBED ABOVE DURING COMPACTION. SELECT FILL SHALL BE ON-SITE CLAYEY SANDY SOILS OR OFF-SITE MATERIAL. MATERIAL SHALL BE FREE OF ORGANIC MATTER OR ROCK FRAGMENTS LARGER THAN 2" IN ANY DIRECTION AND POSSES A PLASTICITY INDEX BETWEEN 10 AND 45, WITH A LIQUID LIMIT OF 70 OR LESS. THE FIRST LIFT OF FILL SHALL BE PLACED WITHIN 48 HOURS OF SATISFACTORY COMPACTION OF THE UNDERLYING SUBGRADE SOILS.

IF DIRECTED BY THE CITY OF LONGVIEW, BLEND THE SUBGRADE SOILS TO A DEPTH OF 12" OVER THE PROJECT AREA TO OBTAIN A UNIFORMLY CONSISTENT PLASTICITY INDEX PRIOR TO LIME OR CEMENT STABILIZATION.

5" CONCRETE PAVEMENT SECTION

NTS

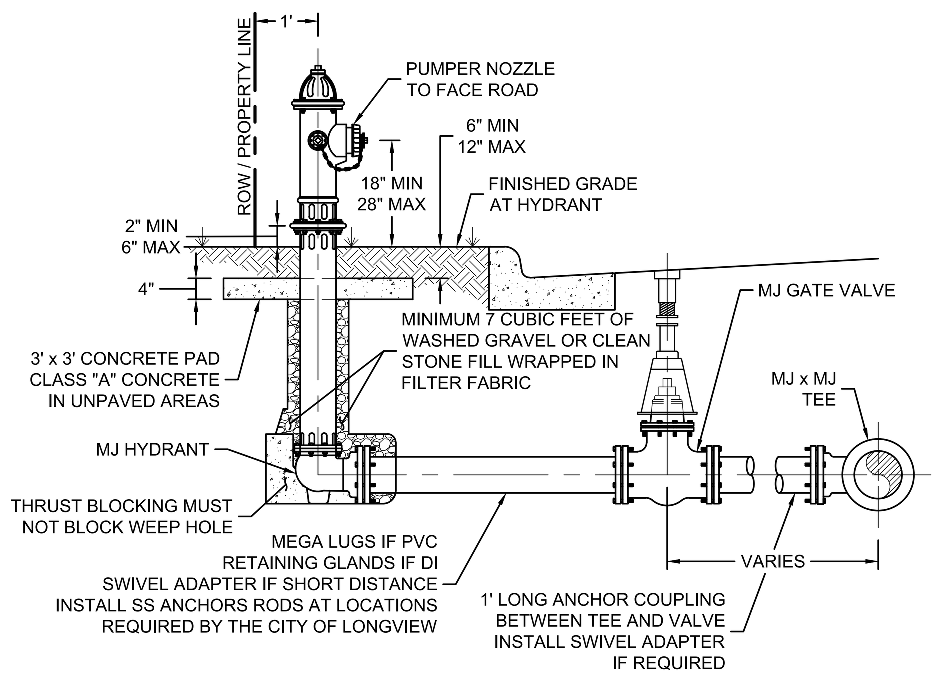

NOTES:

1. CITY OF LONGVIEW ACCEPTABLE FIRE HYDRANTS ASSEMBLIES AREA AS FOLLOWS: MUELLER A-423, AMERICAN DARLING B84 Btc, OR CLOW-MEDALLION.
2. ALL FIRE HYDRANTS SHALL CONFORM TO AWWA STANDARD SPECIFICATIONS FOR FIRE HYDRANTS FOR ORDINARY WATER WORKS SERVICE, C-502.
3. TYPICAL VALVE: ACTUAL VALVE LOCATION WILL DEPEND ON LOCATION OF WATER MAIN.
4. STANDARD BURY DEPTH 4' FEET.
5. SET FIRE HYDRANT ON THE LOT LINE EXTENDED WHEN POSSIBLE.
6. FIRE HYDRANTS SHALL BE YELLOW IN COLOR.
7. ALL MATERIALS SHALL BE AS LISTED ON THE CITY OF LONGVIEW APPROVED PRODUCTS LIST - LATEST VERSION

FIRE HYDRANT INSTALLATION

NTS

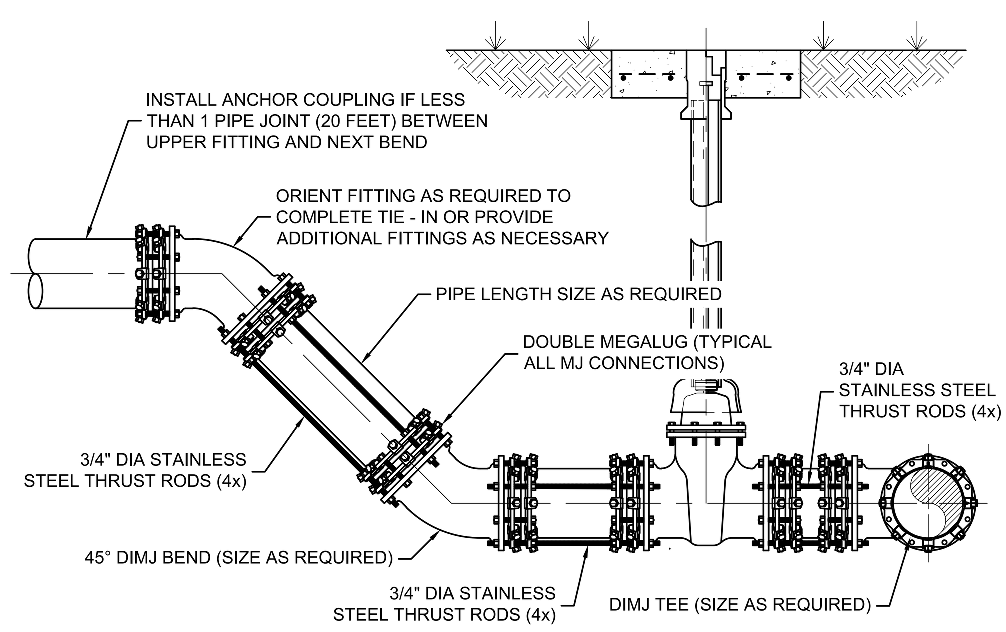

NOTES:

1. TIE - IN DETAIL WITH DOUBLE MEGALUGS AND ANCHOR RODS REQUIRED AT LOCATIONS WHEN WATER LINE MUST BE PUT IN SERVICE BEFORE CONCRETE BLOCKING CAN REACH 28-DAY COMPRESSIVE STRENGTH.
2. THRUST BLOCKING OMITTED FOR CLARITY. INSTALL CONCRETE THRUST BLOCKING AT ALL VALVES AND FITTINGS.
3. LOCATE VALVE AS CLOSE TO TIE - IN AS POSSIBLE. TIE - IN USING SHORT SPOOL WITH ANCHOR RODS OR ANCHOR COUPLING BETWEEN MJ TEE AND VALVE.
4. PVC PIPE CONNECTIONS SHALL HAVE DOUBLE MEGALUGS WITH ANCHOR RODS. DI PIPE SHALL HAVE RETAINING GLANDS WITH ANCHOR RODS.
5. INSTALL ANCHOR COLLAR AND ANCHOR RODS AT UPPER FITTING IF LESS THAN 1 PIPE JOINT (20 FEET) BETWEEN UPPER FITTING AND NEXT BEND ON LINE.
6. IF AREA UNDER UPPER FITTING IS OVER EXCAVATED, BACKFILL AND COMPACT WITH SELECT FILL TO 95% OF MAXIMUM DENSITY (ASTM D698) WITHIN 2% OF OPTIMUM MOISTURE OR AS DIRECTED BY THE CITY OF LONGVIEW.
7. INSTALL CLASS C EMBEDMENT UNLESS OTHERWISE DIRECTED BY THE CITY OF LONGVIEW.

WATERLINE TIE - IN

NTS

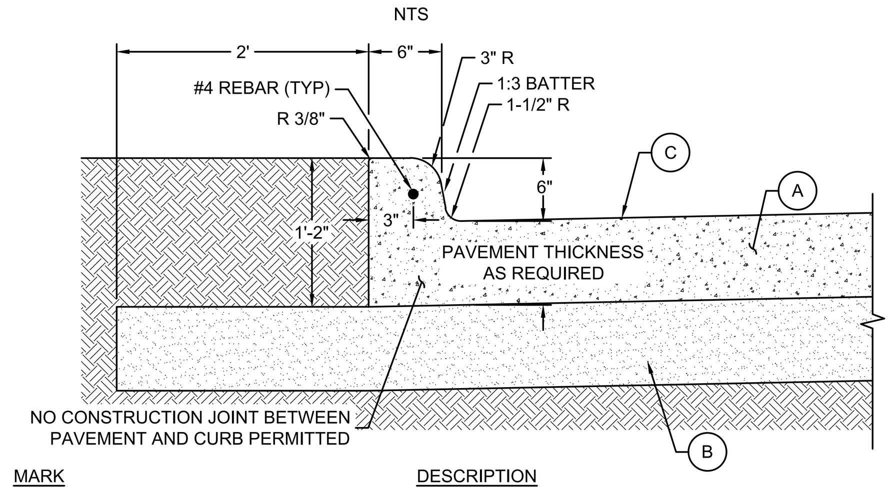

MARK	DESCRIPTION
A	CONCRETE PAVEMENT PERDETAILS.
B	LIME OR CEMENT STABILIZED SUBGRADE PER CITY OF LONGVIEW STANDARD. EXTEND STABILIZATION A MINIMUM OF 2' BEYOND THE BACK OF CURB.
C	PROVIDE SCORE OR OTHER APPROVED DELINEATION LINE 24" FROM AND PARALLEL TO BACK OF CURB TO CREATE STANDARD 24" CURB AND GUTTER APPEARANCE. FINISH CURB AND GUTTER WITH BROOM FINISH MATCHING STANDARD 24" CURB AND GUTTER TO SET APART FROM PAVEMENT FINISH.

NOTES:

1. PORTLAND CEMENT PAVEMENT SHALL BE TxDOT CLASS P HAVING A MINIMUM 4,000 PSI COMPRESSIVE STRENGTH AT 28 DAYS (MINIMUM 6 SACKS PER CUBIC YARD).
2. INSTALL TWO #4 DIA x 18" SMOOTH DOWEL BARS CENTERED IN GUTTER AT CONSTRUCTION JOINTS AND TRANSITIONS.
3. INSTALL TRANSVERSE JOINTS IN CURB AND GUTTER MATCHING PAVEMENT TRANSVERSE JOINT LOCATIONS AND TYPES.
4. CROSS SLOPE OF GUTTER SHALL MATCH CROSS SLOPE OF PAVEMENT.
5. CONSTRUCTION JOINT AND/OR COLD JOINT BETWEEN THE CURB AND PAVEMENT IS NOT PERMITTED.

MONOLITHIC CURB AND GUTTER

NTS

NOTES:

1. ALL CONCRETE PAVEMENT SHALL HAVE MONOLITHIC CURB UNLESS OTHERWISE APPROVED BY THE CITY OF LONGVIEW.
2. TREATED SUBGRADE SHALL EXTEND 2' BEYOND THE PROPOSED BACK OF CURB FOR CURBED PAVEMENT SECTION AND 2' BEYOND THE EDGE OF PAVEMENT FOR NON-CURBED PAVEMENT.

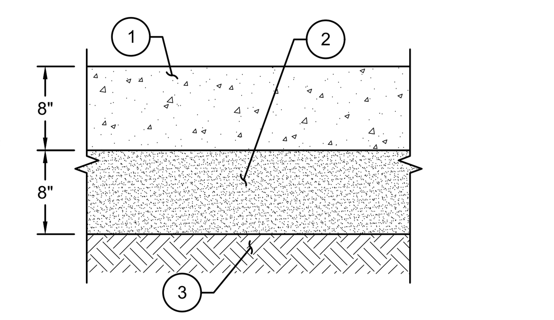

MARK	DESCRIPTION
1	8" REINFORCED PORTLAND CEMENT CONCRETE, TxDOT ITEM 360 (2014 EDITION), CLASS P, MINIMUM 3,200 PSI COMPRESSIVE STRENGTH AT 7 DAYS AND A MINIMUM 4,000 PSI COMPRESSIVE STRENGTH AT 28 DAYS WITH No. 4 BARS ON 18 INCH SPACING, CENTER TO CENTER, EACH WAY (MAXIMUM 15-FOOT JOINT SPACING). ALL COARSE AGGREGATE SHALL CONSIST OF CRUSHED STONE.
2	AN EIGHT (8) INCH THICK TREATED SUBGRADE SHOULD BE PROVIDED IN ALL PAVEMENT AREAS TO PROVIDE A STABLE WORKING PLATFORM FOR NEW PAVEMENT CONSTRUCTION AND IMPROVE THE LONG TERM PERFORMANCE OF THE PAVEMENT SECTIONS. THE SELECTED ALTERNATIVE (LIME VERSUS CEMENT) SHOULD BE BASED ON THE PREDOMINANT SOILS EXPOSED AT THE SUBGRADE ELEVATION DURING CONSTRUCTION. ISOLATED AREAS CONTAINING SUBGRADE MATERIALS NOT CONSISTENT WITH THE PREDOMINANT SUBGRADE SOILS SHOULD BE REMOVED AND REPLACED WITH MATERIALS SIMILAR TO THE MATERIALS PREDOMINANT THROUGHOUT THE RESPECTIVE SITE. SUBGRADE TREATMENT (LIME OR CEMENT) SHALL CONSIST THROUGHOUT LARGE PORTIONS OF THE SITE. LIME TREATMENT OF SMALL SECTIONS OF CLAYEY SUBGRADE SOILS, AND CEMENT TREATMENT OF SMALL SECTIONS OF SANDY SUBGRADE SOILS THROUGHOUT THE SITE SHOULD NOT BE ALLOWED IN ORDER TO PROVIDE A RELATIVELY UNIFORM SUBGRADE SOIL CONDITION FOR NEW PAVEMENT CONSTRUCTION. IF THE PREDOMINANT SUBGRADE SOILS THROUGHOUT THE AREA CONSIST OF CLAYEY SUBGRADE SOILS (HAVING A PLASTICITY INDEX (PI) GREATER THAN 15), THE TREATED SUBGRADE INDICATED ABOVE FOR RESPECTIVE PAVEMENT SECTIONS SHALL CONSIST OF A LIME TREATED SUBGRADE, TxDOT ITEM 260 (2014 EDITION). A MINIMUM OF SIX PERCENT (6%) HYDRATED LIME BY DRY WEIGHT (MINIMUM 42 POUNDS PER SQUARE YARD) SHOULD BE USED TO TREAT SANDY CLAY SOILS HAVING A PLASTICITY INDEX (PI) BETWEEN 16 AND 25, A MINIMUM OF EIGHT PERCENT (8%) HYDRATED LIME BY DRY WEIGHT (MINIMUM 54 POUNDS PER SQUARE YARD) SHOULD BE USED TO TREAT CLAY SOILS HAVING A PLASTICITY INDEX (PI) OF 26 OR MORE. THE LIME TREATED SUBGRADE SOILS SHOULD BE COMPACTED TO A MINIMUM OF 95% STANDARD PROCTOR DENSITY (ASTM D698), AT A MOISTURE CONTENT WITHIN THREE PERCENT POINTS (±3%) OF OPTIMUM MOISTURE. IF THE PREDOMINANT SUBGRADE SOILS THROUGHOUT THE AREA CONSIST OF NON-PLASTIC (PI=0) TO LOW PLASTICITY SANDY AND/OR SILTY SUBGRADE SOILS (HAVING A PLASTICITY INDEX (PI) OF 15 OR LESS), THE TREATED SUBGRADE INDICATED ABOVE FOR THE RESPECTIVE PAVEMENT SECTIONS SHALL CONSIST OF A CEMENTED TREATED SUBGRADE, TxDOT ITEM 275 (2014 EDITION). A MINIMUM OF FOUR (4%) TYPE I, TYPE II OR TYPE I/II PORTLAND CEMENT BY DRY WEIGHT (MINIMUM 30 POUNDS PER SQUARE YARD), COMPACTED TO A MINIMUM OF 95% STANDARD PROCTOR DENSITY (ASTM D698), AT A MOISTURE CONTENT RANGING FROM FOUR PERCENTAGE POINTS BELOW TO ONE PERCENTAGE POINT ABOVE THE OPTIMUM MOISTURE VALUE (-4% TO +1%) SHOULD BE USED TO TREAT ALL SANDY AND/OR SILTY SOILS HAVING A PLASTICITY INDEX (PI) OF 15 OR LESS.
3	REMOVE ALL VEGETATION AND DEBRIS PRIOR TO BEGINNING EMBANKMENT. SCARIFY GROUND SURFACE TO 8" AND COMPACT TO 95% OF MAXIMUM DENSITY PER ASTM D-698 STANDARD PROCTOR. PROOF ROLL COMPACTED SUBGRADE PER TxDOT ITEM 216 PRIOR TO PLACEMENT OF EMBANKMENT TO DETECT ANY AREAS OF WEAKNESS AND REPLACE WITH FOUNDATION MATERIAL AS DIRECTED BY THE CITY OF LONGVIEW. DURING COMPACTION, THE MOISTURE CONTENT OF THE SOIL SHALL BE AS FOLLOWS:

SOIL DESCRIPTION COMPACTION	PLASTICITY INDEX (PI)	MOISTURE CONTENT AT TIME OF
NON-PLASTIC SILTY SAND SOILS	PI<15	+/- 3%
SANDY CLAY SOILS	15<PI<25	-1% TO +3%
CLAY SOILS	PI>25	-1% TO +3%

INSTALL FILL FOR EMBANKMENT IN 8" LIFTS, COMPACTED IN HORIZONTAL LIFTS TO A MINIMUM OF 95% OF MAXIMUM DENSITY PER ASTM D-698 STANDARD PROCTOR. MOISTURE CONTENT SHALL BE AS DESCRIBED ABOVE DURING COMPACTION. SELECT FILL SHALL BE ON-SITE CLAYEY SANDY SOILS OR OFF-SITE MATERIAL. MATERIAL SHALL BE FREE OF ORGANIC MATTER OR ROCK FRAGMENTS LARGER THAN 2" IN ANY DIRECTION AND POSSES A PLASTICITY INDEX BETWEEN 10 AND 45, WITH A LIQUID LIMIT OF 70 OR LESS. THE FIRST LIFT OF FILL SHALL BE PLACED WITHIN 48 HOURS OF SATISFACTORY COMPACTION OF THE UNDERLYING SUBGRADE SOILS.

IF DIRECTED BY THE CITY OF LONGVIEW, BLEND THE SUBGRADE SOILS TO A DEPTH OF 12" OVER THE PROJECT AREA TO OBTAIN A UNIFORMLY CONSISTENT PLASTICITY INDEX PRIOR TO LIME OR CEMENT STABILIZATION.

8" CONCRETE PAVEMENT SECTION

NTS

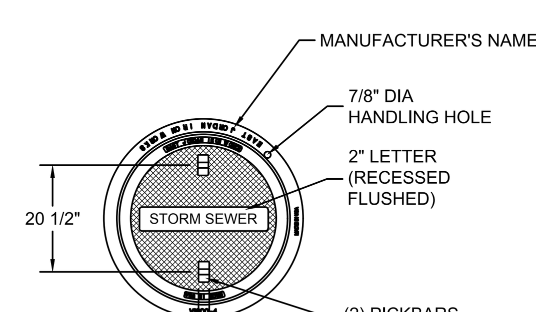

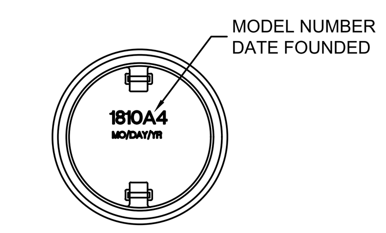

BOTTOM OF COVER

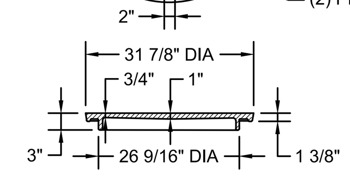

COVER SECTION

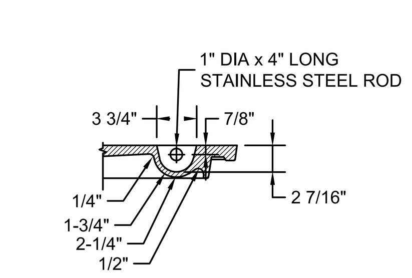

PICKBAR DETAIL

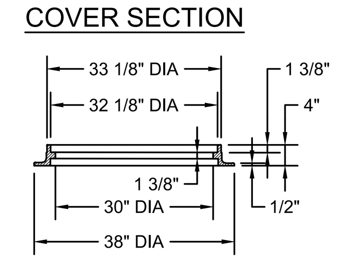

FRAME SECTION

NOTES:

1. MANHOLE RINGS AND COVERS SHALL BE MACHINED SURFACE CAST IRON, NON-ROCKING TYPE.
2. MINIMUM WEIGHT FOR STANDARD RING AND COVER SHALL BE 210 POUNDS.
3. COVER SHALL HAVE RECESS PICK SLOTS AND NO HOLES.

STORM SEWER MANHOLE RING AND COVER

NTS

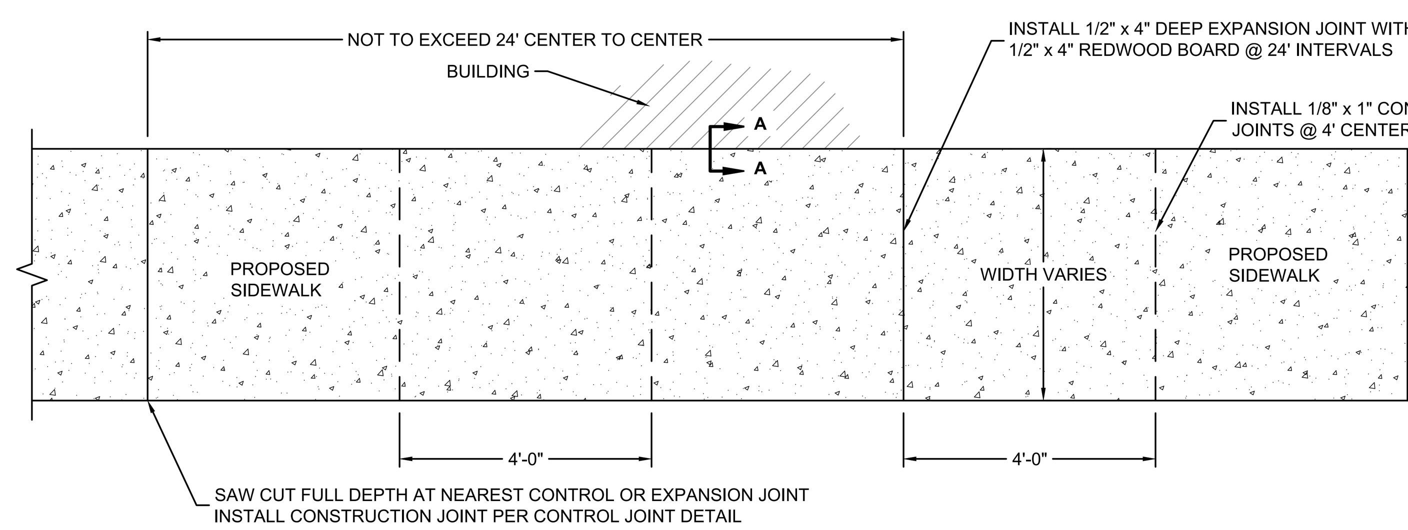

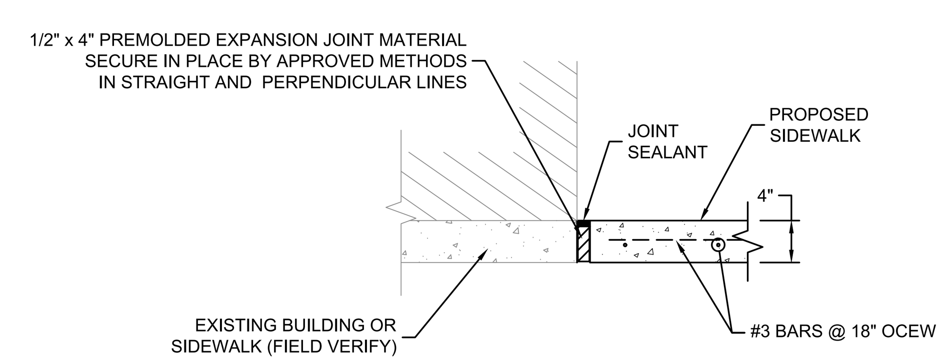

SECTION A-A BUILDING TO SIDEWALK TRANSITION

NTS

GENERAL SIDEWALK NOTES:

1. RECOMPACT SUBGRADE TO 95% OF THE STANDARD PROCTOR (ASTM D698) AT ±2% OF OPTIMUM MOISTURE CONTENT. REMOVE AND REPLACE UNSUITABLE SUBGRADE MATERIALS WITH FOUNDATION MATERIAL ONLY WHEN DIRECTED BY THE ENGINEER. FOUNDATION MATERIAL SHALL BE COARSE AGGREGATE TYPE A3-1 (TxDOT ITEM 247, GRADE 2) PER TECHNICAL SPECIFICATION 0228.
2. SIDEWALK REINFORCEMENT SHALL BE #3 BARS AT 18" OCEW UNLESS SHOWN OTHER WISE IN PLANS.
3. INSTALL 1/8" WIDE x 1" DEEP CONTROL JOINTS AT 4'-0" CENTERS AND 1/2" FULL DEPTH EXPANSION JOINTS AT 24' INTERVALS UNLESS SHOWN OTHER WISE IN PLANS. PROPOSED JOINT LAYOUT SHALL BE APPROVED BY THE ENGINEER OR ENGINEER'S REPRESENTATIVE PRIOR TO CONSTRUCTION.
4. SIDEWALKS, CURB RAMPS, AND CURB AND GUTTER SECTIONS SHALL BE CONSTRUCTED WITH CLASS "A" MODIFIED (3,500 PSI @ 28 DAYS) CONCRETE UNLESS OTHERWISE NOTED.
5. TYPICAL SIDEWALKS SHALL HAVE A MAXIMUM RUNNING SLOPE OF 5% AND CROSS SLOPE OF 2%.
6. SIDEWALKS SHALL BE CONSTRUCTED IN ACCORDANCE WITH THE 2012 VERSION OF THE TEXAS ACCESSIBILITY STANDARDS.

CONCRETE SIDEWALK

NTS

BRINKLEY SARGENT WIGINTON ARCHITECTS

Architect: Brinkley Sargent Wiginton Architects (972) 960-9970
Landscape: Kendall Landscape Architecture (214) 739-3226
Structural: L.A. Fuess Partners, Inc (214) 593-1118
MEP: M-E Engineers (214) 741-1589
Civil: KSA Engineers, Inc (903) 236-7700
Technology: M-E Engineers (303) 421-6656

LONGVIEW POLICE DEPARTMENT

518 W SOUTH ST. LONGVIEW, TEXAS 75601

HISTORY		
#	DATE	DESCRIPTION

STATE OF TEXAS — MICHAEL A. BURNS — 59990 — REGISTERED PROFESSIONAL ENGINEER

SEAL 8/19/2020

TBPE Firm Registration No. F-1356

MISCELLANEOUS DETAILS II

21719

06/04/2020

C-116

BID ISSUE

© 2019 Brinkley Sargent Wigginton Architects, Inc.

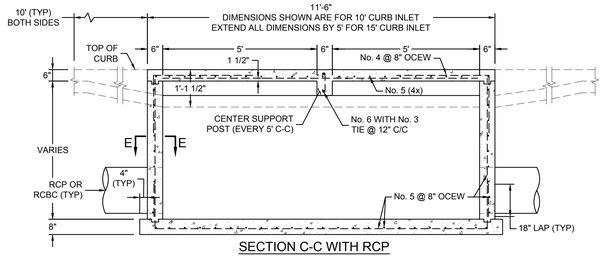

SECTION C-C WITH RCP

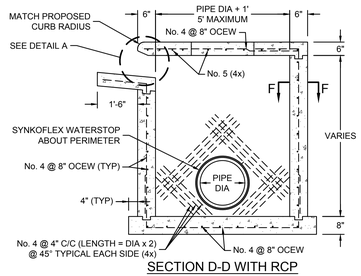

SECTION D-D WITH RCP

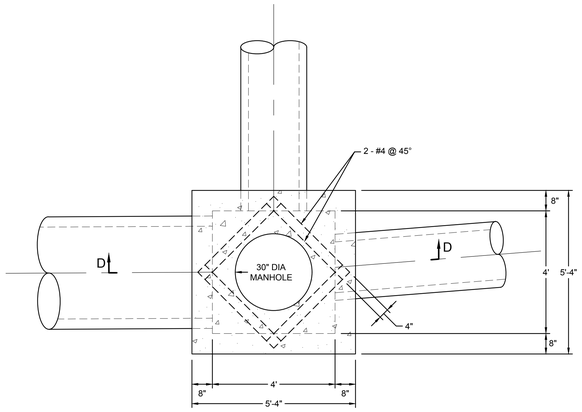

DEEP JUNCTION BOX

SCALE: 1" = 2'

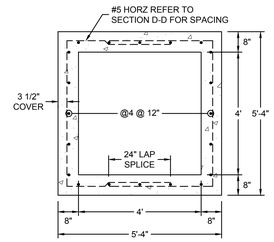

SECTION A-A

SCALE: 1" = 2'

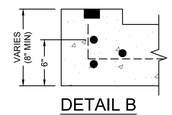

DETAIL B

NTS

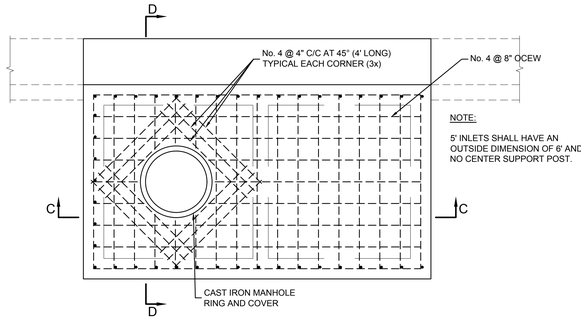

NOTE:

5' INLETS SHALL HAVE AN OUTSIDE DIMENSION OF 6' AND NO CENTER SUPPORT POST.

PLAN VIEW

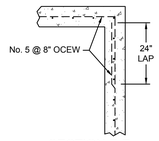

SECTION E-E

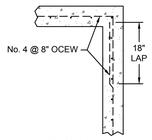

SECTION F-F

TYPICAL CURB INLET DETAILS

NTS

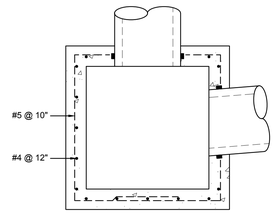

SECTION B-B

SCALE: 1" = 2'

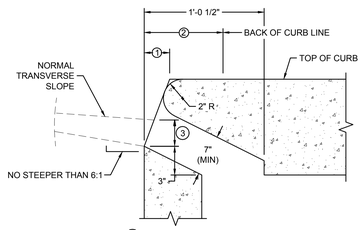

1. MATCH PROPOSED CURB BATTER
2. VARIABLE ~ SEE CURB DETAILS
3. GUTTER DEPRESSION = 3"

DETAIL A

NTS

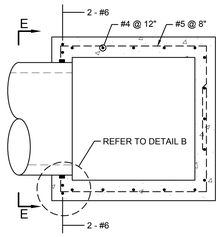

SECTION C-C

SCALE: 1" = 2'

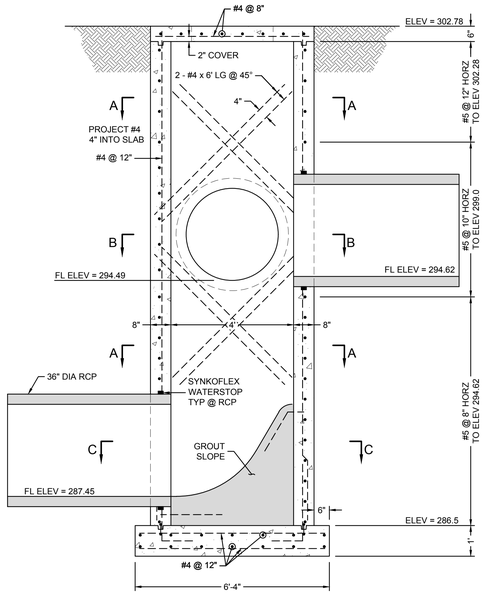

SECTION D-D

SCALE: 1" = 2'

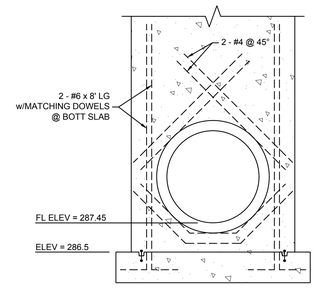

SECTION E-E

SCALE: 1" = 2'

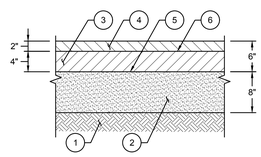

MARK	DESCRIPTION
1	REMOVE ALL VEGETATION AND DEBRIS PRIOR TO BEGINNING EMBANKMENT. SCARIFY GROUND SURFACE TO 8" AND RECOMPACT TO 95% OF STANDARD PROCTOR (ASTM D-698). PROOF ROLL TxDOT ITEM 216. ALL AREAS PRIOR TO PLACEMENT OF EMBANKMENT TO DETECT ANY AREAS OF WEAKNESS AND REPLACE WITH FOUNDATION MATERIAL AT CITY OF LONGVIEW'S DIRECTION. AT TIME OF COMPACTION, THE MOISTURE CONTENT OF THE SOIL SHALL BE AS FOLLOWS: SOIL DESCRIPTION / PLASTICITY INDEX (PI) / MOISTURE CONTENT AT TIME OF COMPACTION NON-PLASTIC SILTY SAND SOILS / PI<15 / +/- 3% SANDY CLAY SOILS / 15<PI<25 / -1% TO +3% CLAY SOILS / PI>25 / -1% TO +3% INSTALL FILL FOR EMBANKMENT IN 8" LIFTS, COMPACTED TO A MINIMUM OF 95% OF STANDARD PROCTOR (ASTM D-698). MOISTURE CONTENT SHALL BE AS DESCRIBED ABOVE AT THE TIME OF COMPACTION. SELECT FILL SHALL BE ON-SITE CLAYEY SOILS OR OFF-SITE MATERIAL. OFF-SITE MATERIAL SHALL BE FREE OF ORGANIC MATTER, OR ROCK FRAGMENTS LARGER THAN 2" IN ANY DIRECTION AND POSSES A PLASTICITY INDEX BETWEEN 10 AND 45, WITH A LIQUID LIMIT OF 70 OR LESS. THE FIRST LIFT OF FILL SHALL BE PLACED WITHIN 48 HOURS OF SATISFACTORY COMPACTION OF THE UNDERLYING SUBGRADE SOILS. BLEND THE SUBGRADE SOILS TO A DEPTH OF 12" OVER THE PHASE TO OBTAIN A UNIFORMLY CONSISTENT PLASTICITY INDEX PRIOR TO LIME STABILIZATION.
2	8" OF SUBGRADE SHALL BE STABILIZED WITH LIME OR CEMENT DEPENDING UPON THE PREDOMINANT SUBGRADE SOILS PLASTICITY INDEX AS INDICATED BELOW. LIME TREATMENT OF CLAY SUBGRADE SOILS SHOULD BE ACCOMPLISHED IN ACCORDANCE WITH TxDOT ITEM 260. THE COMPACTION REQUIREMENTS INDICATED BELOW SHOULD BE SPECIFIED IN LIEU OF THE REQUIREMENTS RECOMMENDED BY TxDOT. LIME SHOULD BE ADDED TO THE SUBGRADE AFTER REMOVAL OF ALL SURFACE VEGETATION AND DEBRIS. A MINIMUM OF SIX PERCENT (6%) HYDRATED LIME SHOULD BE USED TO TREAT SANDY CLAY SUBGRADE SOILS HAVING A PLASTICITY INDEX (PI) BETWEEN 15 AND 25. A MINIMUM OF EIGHT PERCENT (8%) HYDRATED LIME SHOULD BE USED TO TREAT CLAY SUBGRADE SOILS HAVING A PLASTICITY INDEX (PI) OF 26 OR GREATER. LIME STABILIZED SUBGRADE SHALL BE COMPACTED TO A MINIMUM OF 95% OF STANDARD PROCTOR (ASTM D-698) @ ±3% OF OPTIMUM MOISTURE. THE REQUIRED APPLICATION RATES ARE OUTLINED BELOW: PLASTICITY INDEX (PI) / APPLICATION (%) / DEPTH OF TREATMENT (INCHES) / LIME REQUIRED (LBS/SY) 16 TO 25 / 6 / 8 / 42 ≥26 / 8 / 8 / 54 CEMENT TREATMENT OF SANDY SUBGRADE SOILS SHOULD BE ACCOMPLISHED IN ACCORDANCE WITH TxDOT ITEM 275. THE COMPACTION REQUIREMENTS INDICATED BELOW SHOULD BE SPECIFIED IN LIEU OF THE REQUIREMENTS RECOMMENDED BY TxDOT. TYPE I, TYPE II, OR TYPE III PORTLAND CEMENT SHOULD BE ADDED TO THE SUBGRADE AFTER REMOVAL OF ALL SURFACE VEGETATION AND DEBRIS. CEMENT SHOULD BE ADDED ONLY TO THAT AREA WHERE THE MIXING, COMPACTION AND FINE GRADING CAN BE COMPLETED IN DAYLIGHT WITHIN TWO (2) HOURS OF APPLICATION, AND IN ONE CONTINUOUS OPERATION. A MINIMUM OF FOUR PERCENT (4%) TYPE I, TYPE II, OR TYPE III PORTLAND CEMENT SHOULD BE USED TO TREAT SANDY AND/OR SILTY SUBGRADE SOILS HAVING A PLASTICITY INDEX (PI) OF 15 OR LESS. THE REQUIRED APPLICATION RATE FOR A FOUR PERCENT (4%) TREATMENT DEPTH OF EIGHT (8) INCHES IS OUTLINED BELOW BASED ON THE PLASTICITY INDEX (PI) OF THE PREDOMINANT SUBGRADE SOILS. CEMENT STABILIZED SUBGRADE SHALL BE COMPACTED TO A MINIMUM OF 95% OF STANDARD PROCTOR (ASTM D-698) @ -4% TO +1% OF OPTIMUM MOISTURE PLASTICITY INDEX (PI) / APPLICATION (%) / DEPTH OF TREATMENT (INCHES) / CEMENT REQUIRED (LBS/SY) ≤15 / 4 / 8 / 30
3	4" OF HMAC INSTALLED IN ONE 4" LIFT, TxDOT ITEM 340, TYPE A OR B COMPACTED USING AIR VOID CONTROL METHOD.
4	2" OF HMAC, TxDOT ITEM 340, TYPE D, COMPACTED USING AIR VOID CONTROL METHOD.
5	MC-30 PRIME COAT APPLIED AT A MAXIMUM RATE OF 0.25 GALLONS PER SQUARE YARD. RATE OF APPLICATION SHALL BE ADJUSTED IN THE FIELD TO PROVIDE UNIFORM COVERAGE WITHOUT RUNOFF, AND THE RATE SHALL BE APPROVED BY THE CITY OF LONGVIEW, BASED UPON FIELD TESTS.
6	CRS-2H TACK COAT MECHANICALLY APPLIED AT A MAXIMUM RATE OF 0.10 GALLONS PER SQUARE YARD. RATE OF APPLICATION SHALL BE ADJUSTED IN THE FIELD TO PROVIDE UNIFORM COVERAGE WITHOUT RUNOFF, AND THE RATE SHALL BE APPROVED BY THE CITY OF LONGVIEW, BASED UPON FIELD TESTS. TACK COAT SHALL BE APPLIED BETWEEN ALL LAYERS OF HMAC.

6" HMAC PAVEMENT SECTION

NTS

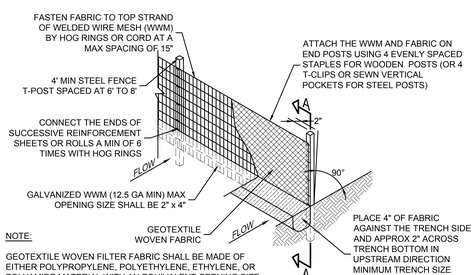

NOTE:

GEOTEXTILE WOVEN FILTER FABRIC SHALL BE MADE OF EITHER POLYPROPYLENE, POLYETHYLENE, ETHYLENE, OR POLYAMIDE MATERIAL WITH AN EQUIVALENT OPENING SIZE BETWEEN 20 AND 50. IT SHALL HAVE A GRAB STRENGTH OF 100 PSI IN ANY DIRECTION AND A MULLEN BURST STRENGTH EXCEEDING 200 PSI (ASTM D-3786).

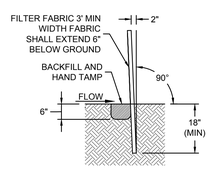

SECTION A-A

NTS

NOTES:

1. FURNISH AND INSTALL FILTER FABRIC FENCE AT THE REQUIRED LOCATIONS TO KEEP EROSION AND SEDIMENT OFF OF THE STREETS OR PRIVATE PROPERTY, OR LOCATIONS AS DIRECTED BY THE CITY OF LONGVIEW.
2. ALL FILTER FABRIC FENCE PLACEMENT SHALL BE AGREED UPON BY THE THE CITY OF LONGVIEW.
3. DEVELOPER/CONTRACTOR SHALL BE RESPONSIBLE FOR MAINTENANCE OF FILTER FABRIC FENCE THROUGHOUT CONSTRUCTION ACTIVITIES.

SEDIMENT CONTROL FENCE

NTS

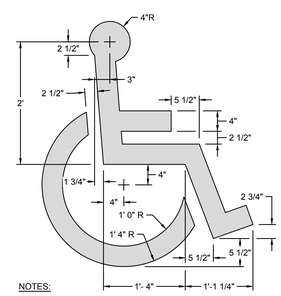

NOTES:

HANDICAP SYMBOL SHALL BE PRE-FABRICATED THERMOPLASTIC PAVEMENT MARKER IN ACCORDANCE WITH TxDOT ITEM 668. PAINTED SYMBOLS ARE NOT ACCEPTABLE

ADA PAVEMENT MARKING SYMBOL

NTS

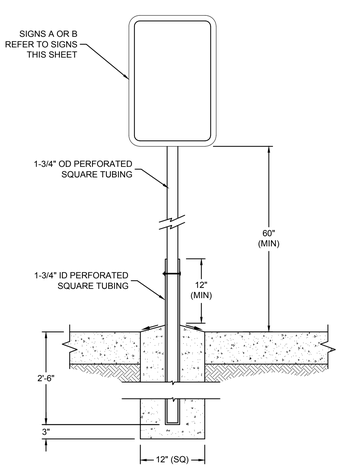

TYPICAL SIGN MOUNTING DETAIL

NTS

SIGN A

MUTCD DESIGNATION: (1) R7-BT AND (1) R7-8P

SIZE: 12" x 18" AND 12" x 6"

COLOR: BACKGROUND: WHITE
BORDER/TEXT: GREEN
HANDICAP SYMBOL: BLUE

SIGN B

MUTCD DESIGNATION: R7-BT

SIZE: 12" x 18"

COLOR: BACKGROUND: WHITE
BORDER / TEXT: GREEN
HANDICAP SYMBOL: BLUE

BRINKLEY SARGENT WIGINTON ARCHITECTS

Architect: Brinkley Sargent Wigginton Architects (972) 960-9970
Landscape: Kendall Landscape Architecture (214) 739-3226
Structural: L.A. Fuess Partners, Inc (214) 593-1118
MEP: M-E Engineers (214) 741-1589
Civil: KSA Engineers, Inc (903) 236-7700
Technology: M-E Engineers (303) 421-6656

LONGVIEW POLICE DEPARTMENT

518 W SOUTH ST. LONGVIEW, TEXAS 75601

HISTORY		
#	DATE	DESCRIPTION

STATE OF TEXAS
MICHAEL A. BURNS
50990
LICENSED PROFESSIONAL ENGINEER
SEAL
TBPE Firm Registration No. F-1356

MISCELLANEOUS DETAILS III

BID ISSUE

21719
06/04/2020

C-117

GENERAL NOTES

SECTION 1 - GENERAL INFORMATION AND DESIGN CRITERIA

SECTION 1.1 - DOCUMENTS

1.1.1 Structural Drawings are not stand-alone documents. They are augmented by technical specifications and must be coordinated with Architectural, Civil and Mechanical / Electrical / Plumbing / HVAC documents.

1.1.2 General Notes and Typical Details apply generally throughout the project wherever conditions similar to those depicted exist and are not necessarily referenced specifically in the documents.

1.1.3 Structural documents are protected by U.S.A. Copyright Laws, and shall not be used for any purpose other than construction of the building described in the Architectural documents and at the geographic location shown. The structural design described in these documents is not valid for any other purpose, use or location.

1.1.4 The Geotechnical Report referenced herein is not part of the Structural Documents. However, a copy should be obtained for reference during installation of foundations and subgrade preparation.

COORDINATION

1.1.5 Contractor is responsible for coordinating Structural Documents with other trades and disciplines including; architectural, civil, mechanical, electrical, HVAC and fire protection. Some requirements are not known prior to issue and may change as layout and fabrication drawings are developed. Promptly report deviations and interferences with structural components for resolution by the Engineer.

1.1.6 Contractor shall verify dimensional location and depth of slab recesses and offsets with Architectural Drawings.

1.1.7 Contractor shall verify weights, location and details of structurally supported mechanical equipment prior to construction of the supporting structure. Report deviations from assumed conditions to the Engineer prior to fabricating materials.

1.1.8 Contractor shall verify size, location and detail of roof openings and curbs for mechanical equipment prior to fabricating materials. Report deviations from assumed conditions to the Engineer before proceeding with work.

1.1.9 Contractor shall verify size, location and detail of roof openings and curbs for mechanical equipment prior to fabricating materials. Report deviations from assumed conditions to the Engineer before proceeding with work.

1.1.10 Contractor shall verify elevator pit dimensions and depth, elevator shaft floor opening dimensions, over-run clearance requirements at top of shaft, and penthouse dimensions with requirements of purchased equipment. Promptly report discrepancies to Architect for resolution prior to construction.

1.1.11 Contractor shall verify size and location of floor and roof penetrations shown on structural drawings with other disciplines. Submit for approval a composite drawing showing all proposed openings and sleeves through structural members for engineering review prior to or simultaneous with shop drawings for affected framing.

1.1.12 Do not scale plans, details and sections for quantity, length or fit of materials.

REFERENCE ELEVATIONS

1.1.13 Heights of floor and roof decks and various framing components are given on the drawings relative to a reference elevation of 100'-0". This reference elevation is equivalent to a Mean Sea Level Elevation of 310.00 ft, Contractor shall confirm with civil drawings prior to construction.

TEMPORARY BRACING

1.1.14 Structural systems are designed for in-place conditions only. Contractor shall provide temporary bracing of structural components (including but not limited to beams, purlins, columns, walls, and structural frame) for conditions that will exist during construction and to meet all regulatory requirements for safety of workmen.

1.1.15 Temporary frame bracing shall remain until installation of permanent structural bracing elements, member connections and floor or roof diaphragms are complete.

SECTION 1.2 - CODES AND STANDARDS

1.2.1 Building Code of jurisdiction : International Building Code 2012

1.2.2 Structural Concrete Code - American Concrete Institute (ACI) 318

1.2.3 Structural Steel Code - American Institute of Steel Construction (AISC) 360

SPECIAL INSPECTIONS

1.2.4 See Statement of Special Inspections for minimum special inspections and testing per the Building Code.

1.2.5 See Technical Specifications for other materials testing and inspection requirements.

SECTION 1.3 - DESIGN CRITERIA

1.3.1 Live Loads

Roof, Typical	20	psf
Corridors	100	psf
Typical Floors	100	psf
Public Corridors	100	psf
Stairs and Exitways	100	psf
Elevator Lobbies	100	psf
Mechanical Rooms	150	psf (1)
Heavy storage	250	psf (1)
Light storage	125	psf
Surcharge on Retaining Walls	100	psf
Vehicle Storage/Maintenance	250	psf (1)

Notes:
(1) Minimum load, or weight of equipment (the heavier).

LIVE LOAD REDUCTION

1.3.2 Live load has been reduced in accordance with provisions of the Building Code.

1.3.3 Roof Snow Loads

Risk Category	IV	
Snow Importance Factor	1.2	
Ground Snow Load	5	psf
Snow Exposure Factor (Ce)	1.0	
Snow Thermal Factor (Ct)	1.0	
Flat Roof Snow Load	6	psf

1.3.4 Dead Loads

Carpet Flooring	2	psf
Topping Slabs	50	psf
Raised Access Floor	15	psf
Floor Collateral	8	psf (1)
Roof Collateral	8	psf (1)
Roofing and Insulation	10	psf (2)

Notes:
(1) Collateral loads include: lighting, ductwork, sprinklers, ceilings (where applicable) and miscellaneous framing.
(2) Roofing system weight is the maximum unit weight of roofing materials and ballast (where applicable) for which the roof structure is designed.
(3) Sprinkler loads are for distribution lines and heads, exclusive of mains, which are included separately as concentrated dead loads.

1.3.5 Wind Loads

Risk Category	IV	
Ultimate Design Wind Speed (Vult)	120	mph
Nominal Design Wind Speed (Vasd)	95	mph
Wind Exposure Classification	C	
Internal Pressure Coefficient (Gcpi)	0.18	(+/-)
Enclosure Classification	Enclosed	

1.3.6 Seismic Loads

Risk Category	IV
Seismic Importance Factor	1.5
Mapped Spectral Response Acceleration Ss	0.117
Mapped Spectral Response Acceleration S1	0.063
Site Class	D
Spectral Response Coefficient, Sds	0.125
Spectral Response Coefficient, Sd1	0.101
Seismic Design Category	A

Analysis Procedure Used — Minimum Lateral Force
Basic Seismic Force Resisting System:
Steel Systems Not Specifically Detailed for Seismic Resistance
Seismic Response Coeff, Cs — 0.01
Response Modification Factor, R — 3

1.3.7 Concentrated Loads

Location	Load-pounds	Area	Note
Metal Roof Deck	250	1 sq.ft.	
Roof Joists	250		(3)
Roof Opng Support Frames	500	6.25 sq.ft.	
Elevator Machine Room	300	4 sq. in.	
Garages	3000	20.25 sq. in.	(2)
Office Floors	2000	6.25 sq. ft.	(2)
Stair Treads	300	4 sq. in.	
H20 Truck Wheel	16000	9 sq. ft.	

Notes:
(1) Concentrated loads apply to any location on supporting structure, separately from (not in addition to) uniform live loads, except as noted otherwise.
(2) Applies to each structural component individually.
(3) Load applied at any panel point along top or bottom chord.

1.3.8 Mechanical Units - Assumed weights and locations of roof-supported mechanical equipment are indicated on Roof Framing Plan. Notify Engineer of deviations in weight, location or detail prior to fabrication of materials.

1.3.9 Elevators - Design Loads for Elevator sheave beam and foundation supports are based on the following Manufacturer and Model No.: Thussenkrupp Endura 45 B

1.3.10 Pedestrian Guardrail - 50 lb/ft horizontal and vertical, or 200 lb concentrated at top, any direction.

SECTION 1.4 - STRUCTURAL DEFLECTIONS

1.4.1 Live Load - in general, floor and roof systems are designed to limit vertical deflections due to live loads to (Clear Span)/360. Attachments of architectural and mechanical components to or between floor and roof structures shall allow for live load deflections of this magnitude to occur without causing distress or deformity to the components.

1.4.2 Dead Load - in general, floor and roof systems are designed to limit vertical deflections due to total load to (Clear Span)/240. Some deflections may occur incrementally as dead loads are placed on the structure, and in the case of concrete structures, may occur over an extended time period. Attachments of architectural and mechanical components shall allow for dead load deflections that may occur after installation.

1.4.3 Structural cambers, where shown on the drawings, are generally for estimated dead load deflections. Components attached to cambered beams or trusses should not be connected in a manner that would restrict vertical deflection prior to the placement of dead loads. Where steel beams are connected with self-tensioning devices, final tensioning shall be delayed until structural dead loads are in place.

1.4.4 Mechanical Loads - architectural wall systems should not be connected to structural beams supporting mechanical systems until all equipment is in place and charged (with water, coolant, etc.) as significant vertical deflections are likely to occur during installation of equipment.

1.4.5 Exterior Walls - Attachments of curtainwall and other exterior wall systems shall allow for differential vertical deflection of 0.5", and horizontal deflection of 0.45" between adjacent floors. NOTE - wall cladding attachments shall not transfer lateral reactions to bottom flanges of steel beams, joists or trusses except, 1) where specifically shown on the Structural Drawings, or 2) special bracing is provided by the wall supplier/installer to transfer lateral reactions to the floor slab.

SECTION 2 - FOUNDATIONS AND RELATED EARTHWORK

GEOTECHNICAL REPORT

2.1 Design of foundations and structural components in contact with soil is based on the recommendations given in the following:

Report by	: Alliance Geotechnical Group, Inc.
Date of Report	: August 24, 2019
Report Number	: LE19-006
Supplment/Addendum	: LE19-006-02
Addendum Date of Report	: September 16, 2019

2.2 Refer to the soil report for subsoil conditions that may be encountered in the installation of foundations, and other information relevant to foundations and site preparation.

AUGER CAST PILES

2.4 Design Criteria:
Bearing Stratum: Stiff to hard grayish brown to dark grayish brown silty clay containing varying amounts of silty very fine sand to silt seams and layers (CH) and/or dense to very dense grayish brown to dark grayish brown silty fine sand and silty clayey fine sand containing varying amounts of clay layers, and hard sandstone/siltstone layers(SM, SM-SC, & SC). -See Geotechnical Report

Top of Stratum Elevation (for Bidding Purposes Only)	: 33 ft (Relative to Datum)
Allowable End Bearing	: 7000 psf
Positive Side Friction	: 1200 psf (Downward)
Negative Side Friction	: 600 psf (Uplift)
Upheaval Side Friction	: 900 psf (Heave)
Upheaval Design Depth	: 10 ft (Depth of Heave)

2.5 Top of pile elevations given are relative to reference elevation 100'-0".

2.6 Pile depths indicated are for bidding purposes only. Actual pile depths may vary depending on depth to bearing stratum.

2.7 Steel dowels at tops of piles or footings shall extend 30 bar diameters above and below top of pile unless noted otherwise (noted as "LAP" on Typical Details).

2.8 Top of pile elevations given are relative to reference elevation 100'-0".

2.9 Overpour at tops of piles ("mushrooms") shall be removed to the required pile diameter.

2.10 Grout to be 4000psi compressive strength.

EARTH-RETAINING WALLS

2.11 Design of earth-retaining walls is based on:

Wall	Soil Pressure*	Hydrostatic Pressure (2)	Surcharge Load (3)
Perimeter Building			
Grade Beam Wall	75 pcf(1)	0 pcf	100 psf
Site Retaining Walls	55 pcf(1)	0 pcf	100 psf

(1) Backfilled with free-draining granular soil & perforated pipe.
(2) Requires drain pipe as shown in drawings.
(3) Design surcharge loads support intended building usage activities; walls are not designed for larger surcharge loads associated cranes and other large construction equipment.

2.12 Earth-retaining walls may be backfilled once concrete in wall and pilasters has attained specified design strength.

SECTION 3 - STRUCTURAL CONCRETE

SECTION 3.1 - CONCRETE FORMS

3.1.1 Vertical surfaces of Grade Beams, Pilaster and Pile Caps shall be formed unless specifically shown or noted otherwise in the details.

3.1.2 Formed Voids - Provide retained void spaces between bottom of structural members and subgrade as follows:
Structural Slabs — 12 inches
Grade Beams — 12 inches

SECTION 3.2 - STEEL REINFORCING

STEEL REINFORCING

3.2.1 All bars shall be deformed in accordance with ASTM A615. Reinforcing indicated to be welded shall conform to ASTM A706.

3.2.2 Strength of reinforcing bars shall be grade 60.

SPLICING OF REINFORCING BARS

3.2.3 Top bars in beams or slabs shall be spliced at midspan between supports, unless noted otherwise.

3.2.4 Bottom bars in beams or slabs shall be spliced at supports, unless noted otherwise.

LAPPED SPLICE LENGTHS

3.2.5 Lap reinforcing 30 bar diameters at splices unless noted or detailed otherwise.

3.2.6 Tension splice lengths shall be calculated in accordance with ACI 318. Use Class "B" splices unless noted otherwise.

3.2.10 Welded wire fabric splice length (overlap), measured between outermost cross wires of each fabric sheet, shall be at least one spacing of cross wires plus 2 inches, but in no case less than 6 inches.

CONCRETE COVER TO REINFORCING

3.2.7 Clearance from face of concrete to face of reinforcing:

Piles	3"
Formed Grade Beams, Pilasters, Pedestrals and Pile Caps	2" top, 2" sides, 3" bottom
Slabs on Void	1" top, 2" bottom
Beams, Joists	1 1/2"
Walls	2" sides

PLACEMENT OF REINFORCING

3.2.8 Offsets in reinforcing bars shall be bent at a ratio of 1 (normal to bar axis) to 6 (parallel to bar axis).

3.2.9 Provide corner bars at intersections of beams and walls in accordance with Typical Details.

3.2.10 Provide dowels from grade beams or foundation equal in size and spacing to vertical bars in walls or pilasters and extend one splice length above and below joint line, unless noted otherwise.

3.2.11 Start stirrup spacing in beams 2 inches outside of face of supports.

3.2.12 Place first bar of slab reinforcing parallel to side 2 inches from a free edge or half of required bar spacing from face of edge beam.

3.2.13 Single layer reinforcing in walls shall be placed at center of walls unless noted otherwise.

3.2.14 Place welded wire reinforcing in slabs poured on metal deck centered in concrete thickness above deck unless noted otherwise.

SECTION 3.3 - CONCRETE MIX DESIGNS

3.3.1 Concrete Mix Schedule:
a) "HRC" refers to hardrock concrete having air dry unit weight of approximately 145 PCF.
b) Where w/c ratio is not indicated in the Concrete Mix Schedule, it shall be as necessary to meet strength requirements.
c) Where the w/c ratio is shown, it shall be adhered to regardless of strength requirements.
d) "Strength" is required compressive cylinder strength at an age of 28 days.
e) Slump may be increased at GCs option by use of mid range water reducer. Do not use fly ash in slab-on-grade mix.

Conc. Class	Strength psi	Agg. Type	Agg. Size	Slump Inches	Max w/c	Notes
A	4000	HRC	1"	3-5	0.45	
B	4000	HRC	3/4"	3-5	0.45	
C	4500	HRC	1"	3-5	0.45	
D	3000	HRC	1"	3-5	0.45	
E	3000	HRC	1-1/2"	5-7	---	

3.3.2 Mix Usage Schedule:

Description of Use	Concrete Class	Air Content
Grade Beams, Pilasters, Pedestals	A	3-6%
Pile Caps	A	3-6%
Topping Slabs	A	------
Elevator Pit Walls	A	------
Slab on Composite Metal Deck	B	------
Interior Slab on Void	C	------
Exterior Slab on Void	C	3-6%
Exterior Equipment Pads	C	3-6%
Mudslab	D	------
Drilled Piers, Screen Wall Piers	E	------
Exterior Retaining Walls	A	3-6%
Footings	E	------

SECTION 3.4 - CONCRETE SLABS

3.4.1 Slabs Placed on Void

Location	Thickness
Typical	10 inches

a) See typical detail for rebar placement, unless detailed otherwise.
b) Provide construction joints in slabs where indicated on Plans. Allow minimum of 4 days interval between placing adjacent sections of slab.

3.4.2 Topping Slabs

Location	Thickness	Reinforcing	Concrete
Level 1	4	6x6-W5.0x5.0	Class E

3.4.3 Slabs on Composite Metal Deck
Composite Slab Schedule:

Type Mark	Overall T-inches	Typ Slab Reinf	Notes/ Addnl Top Reinf
A	6.5	6x6-W2xW2 WWM	#4(8-0)@12 over girders
B	4.5	6x6-W2xW2 WWM	#4(8-0)@12 over girders

"Girders" refers to interior beams oriented parallel to deck.
Slab types correspond to deck type (see Composite Metal Deck).
Locate Typ Slab Reinf at center of slab above deck.
Top Cover for Addnl Top Reinf: 1".

SECTION 3.5 - DRILLED IN ANCHORS

3.5.1 Drill holes with rotary impact hammer drill using carbide tipped bits. Drill bits shall be of the diameter as specified by the anchor manufacturer. All holes shall be drilled perpendicular to the concrete or masonry surface.

3.5.2 Embedded items: Identify position of reinforcing steel and other embedded items prior to drilling holes for anchors. Exercise care in drilling to avoid damaging existing reinforcing or embedded items. Notify the Engineer if reinforcing steel or other embedded items are encountered during drilling. Take precautions as necessary to avoid damaging electrical and telecommunications conduit, and gas lines.

3.5.3 Base Material Strength: Unless otherwise specified, do not drill holes in concrete or masonry until concrete, mortar, or grout has achieved full design strength.

TESTING

3.5.4 Continuous special inspection is required for adhesive anchors. Remove and replace mis-placed or malfunctioning anchors. Clean and fill empty anchor holes and patch failed anchor locations with high-strength nonshrink, nonmetallic grout. Anchors that fail to meet proof load or installation torque requirements shall be regarded as malfunctioning.

EXPANSION AND ADHESIVE ANCHORS

3.5.5 Concrete base material: provide anchors of size and type shown with ICC-ES or IAPMO-UES compliance required

Expansion Anchors: Hilti Kwik Bolt TZ (ICC-ES ESR-1917)

Adhesive Anchors: Hilti HIT-HY 200 Safe Set System (ICC-ES ESR-3187) for use with Hilti HIT-Z Rod, HAS-E Rod, & Hollow Drill Bit
Hilti HIT-RE 500-V3 Safe Set System (ICC-ES ESR-3814) for use with Hilti HAS-E Rod, Hollow Drill Bit & Hilti Roughening Tool

3.5.6 Grout filled CMU (Concrete Masonry Unit) base material: provide anchors of size and type shown with ICC-ES or IAPMO-UES compliance required

Adhesive Anchors: Hilti HIT-HY 200 (ICC-ES ESR-3963) for use with Hilti HAS-E Rod, Rebar

3.5.7 Anchors exposed to weather or soil to be stainless steel or galvanized.

INSTALLATION

3.5.7 Perform anchor installation in accordance with manufacturer's printed installation instructions (MPII).

3.5.8 Protect threads from damage during anchor installation.

3.5.9 IBC 2012 requires ACI/CRSI certification for adhesive anchor installers (AAI) when installing adhesive anchors of horizontally or upwardly inclined conditions. Installers of adhesive anchors shall hold a current AAI certification as accredited by ACI/CSRI in accordance with ACI 318-14 17.8.2.2. Anchor Manufacturer Installation Training is acceptable as a supplement to ACI\CRSI AAI certification. Installers shall submit their certifications to the inspector (testing lab) for each installation.

SECTION 4 - STRUCTURAL MASONRY

SECTION 4.1 - GENERAL

4.1.1 Refer to Architectural layout and Drawings and Specifications for details and exact dimensions of masonry work including rustications, corbels, coursings, reglets, weep holes, waterproofing and flashing.

4.1.2 Grouting of reinforced masonry walls shall be accomplished in maximum five foot lifts.

4.1.3 All cells below finish floor or exterior grade shall be fully grouted.

4.1.4 Type "N" mortar shall not be used.

SECTION 4.2 - STRUCTURAL PROPERTIES

4.2.1 Concrete Masonry Units: ASTM C90 with minimum net compressive strength of 2000 psi

4.2.2 Mortar: ASTM C270, Type S (Proportion Specification)

4.2.3 Grout: ASTM C476 (Proportion Specification)

4.2.4 Special inspections of masonry are required.

SECTION 4.3 - REINFORCING

4.3.1 Horizontal joint reinforcing shall be "Ladder Type" 9 ga. welded wire spaced 16 inches on center vertically.

4.3.2 Provide special "L" and "T" shaped sections at wall intersections. Lap horizontal wires at least 12" at splices.

4.3.3 Provide corner bars at intersections of reinforced trough tiles equal in size and number to horizontal reinforcing.

4.3.4 The first cell at corners, ends of walls, and each side of opening shall be grouted and reinforced with 1 #5 vertical unless noted otherwise.

4.3.5 Typical wall reinforcing for load bearing 8" CMU walls shall be #5 bars vertical spaced at 32 inches on center in grout filled cells unless noted otherwise.

4.3.6 Typical wall reinforcing for load bearing 12" CMU walls shall be #5 bars vertical spaced at 24 inches on center in grout filled cells.

SECTION 5 - STRUCTURAL STEEL

SECTION 5.1 - STRUCTURAL FRAME

5.1.1 Structural Steel Properties:

High Strength Steel	ASTM A992 Grade 50
Use High Strength Steel for W Shapes and WT's, u.n.o.	
Structural Steel (Normal Strength)	ASTM A36
Use for Angles, Channels, and Plates, u.n.o.	
Steel Pipes	ASTM A53, Grade B
Hollow Structural Sections (HSS)	ASTM A500, Grade B
Erection Bolts	ASTM A307
High Strength Bolts	ASTM A325N
Anchor Bolts	ASTM F1554 Grade 36

5.1.2 Continuity Plates (Full Depth column stiffeners aligned with beam flanges, or Full Depth beam stiffeners aligned with column flanges) shall match the steel grade of the base member.

WELDING

5.1.3 Unless otherwise noted, angles, plates, rods, and miscellaneous framing shall be welded at contact joints and supports. Weld sizes shall conform to AWS D1.1 minimums, except where noted otherwise.

5.1.4 Where fillet weld sizes are not indicated on weld symbols, fillet size shall be 1/16th inch smaller than thickness of thinner of materials being joined.

5.1.5 Complete penetration welds are indicated by notation "CP" on weld symbols, partial penetration by "PP".

STRUCTURAL BOLTS

5.1.6 Bolts indicated on details shall be 3/4 inch diameter, unless noted otherwise.

5.1.7 Bolts shall be tightened by the AISC "Snug Tight" method unless noted otherwise.

MISCELLANEOUS

5.1.8 Edge angles at perimeters of floors and roofs noted as "CHORD MEMBERS" or "CONTINUOUS" on details shall be butt welded at splices to develop full allowable tensile strength of member.

5.1.9 Edge angles supporting floor or roof deck shall be spliced only over supports.

5.1.10 Shelf angles supporting masonry shall have 1/4 inch wide expansion joints spaced not more than 40 feet apart. Coordinate shelf angle expansion joint locations with masonry joint locatinons, see architectural. Add shelf angle supports each side of shelf angle expansion joints so that shelf angle cantilevers are less than 1'-6"

5.1.11 Steel members shown to be curved shall be rolled in a manner that will not cause distortion or buckling. Should alterations to the member size, such as a thicker flange or web, be required to ensure this outcome, the additional steel shall be provided at no additional cost to the contract.

COMPOSITE STEEL BEAMS

5.1.11 Beams shall have shear studs spaced at 2 feet maximum on center, whether shown or not.

5.1.12 Composite steel beams do not require shoring during placement of concrete slab, unless noted otherwise.

SHEAR STUDS

5.1.13 Shear studs shall be fusion-welded, headed studs of high strength steel.

5.1.14 Unless noted otherwise, studs shall have a shank diameter of 3/4-inch.

SECTION 5.2 - STEEL JOISTS AND JOIST GIRDERS

5.2.1 Joist Legend:

22K6	- SJI K-SERIES JOIST.
22KCS	- SJI KCS-SERIES JOIST.
24LH8	- SJI LH-SERIES JOIST.
22KSP	- SPECIAL DESIGN FOR SPECIFIED LOADING.

5.2.2 Unless noted or detailed otherwise, typical seat depths shall be:
K or KCS Series - 2-1/2 inches

5.2.3 Extend and connect bottom chord members of joists and joist girders framing to columns unless detailed otherwise. Do not weld bottom chord connections to columns.

5.2.4 Weld connections of joists and joist girders to supporting steel in accordance with SJI minimum requirements, unless noted or detailed otherwise.

5.2.5 Joists and Joist Girders shall be designed for concentrated dead or live load in addition to required uniform dead and live loads, as follows:
Joists: 250 lb. placed at any panel point.

5.2.6 See S102 & S103 for net uplift requirements due to wind load.

SECTION 5.3 - COMPOSITE METAL DECK

5.3.1 Contractor shall provide composite metal decking to meet the following criteria:
1. Decking alone shall be capable of supporting the wet weight of concrete plus construction loads without requiring intermediate shoring for all span conditions on the project, unless noted otherwise.
2. Composite slab and deck system shall be capable of supporting design loads indicated on the drawings for all span conditions on the project.

Deck thickness, indicated by gauge in Composite Steel Deck Schedule, is a minimum and shall be increased as necessary to meet these requirements, at no additional cost to the Contract.

5.3.2 Composite Steel Deck Schedule:

Type Mark	Deck Height	Minimum Gauge	Minimum Ix-in4	Minimum Sx-in3
A	3.0"	20	.907	.512
B	2.0"	20	.403	.326

(Deck shall be Type A unless shown otherwise on plans)

SECTION 5.4 - METAL ROOF DECK

5.4.1 Metal Deck Schedule:

Deck Gauge	SDI Deck Type	Deck Depth (In.)	Sheet Width (In.)	Min. Ix (In.4)	Min. Sx(p) (In.3)	Min. Sx(n) (In.3)	Finish
20	B	1.5	36	0.201	0.234	0.247	Galvanized
20	D	2.5	24	0.730	0.420	0.42	Galv. & Painted

5.4.2 Metal Deck Connection Schedule:

Inst. Mark	Conn. @ Supports (W/N)	Conn. @ Parallel Edges (In.)	Sidelap Conn. No./Span	Req'd Shear Capacity (PLF)
I	36/7	6	6	495 (6'-0" Span)
II	36/4	12	4	200 (8'-2" Span)

5.4.3 1.5B Deck support and parallel edge connections shall be 5/8-inch diameter puddle welds. Sidelap connections shall be no. 10 hex head screws or 1/8" x 1.5" fillet welds.

5.4.4 EPC DECK TORIS A deck support and parallel edge connections shall be 5/8-inch diameter puddle welds. Sidelap connections shall be 1/8" x 1.5" fillet welds.

5.4.5 W/N = sheet width/no. connections each sheet.

5.4.6 Deck connections shall be Mark I throughout unless noted otherwise.

L.A. FUESS PARTNERS, INC.
Structural Engineers
3333 Lee Parkway, Suite 300 • Dallas, TX 75219
214.871.7010 • www.lafp.com
LAFP PROJECT NO. 19100 FIRM REG. NO. F-537

Architect: Brinkley Sargent Wiginton Architects (972) 960-9970
Landscape: Kendall Landscape Architecture (214) 739-3226
Structural: L.A. Fuess Partners, Inc (214)
MEP: M-E Engineers (214) 741-1589
Civil: KSA Engineers, Inc (903) 236-7700
Technology: M-E Engineers (303) 421-6656

BRINKLEY SARGENT WIGINTON ARCHITECTS

LONGVIEW POLICE DEPARTMENT
XXXX SOUTH ST. LONGVIEW, TEXAS 75601

History

#	Date	Description

STATE OF TEXAS
CHRISTOPHER T. MATTHEWS
105076
LICENSED PROFESSIONAL ENGINEER
8-19-2020

GENERAL NOTES

20513
08/19/2020
S101

BID ISSUE

8/17/2020 11:08:21 AM
C:\Temp\19100 -- LongviewPoliceBuilding-R19_jveurinkJSFLP.rvt

Brinkley Sargent Wiginton Architects, Inc.

STATEMENT OF STRUCTURAL SPECIAL INSPECTIONS
2012 INTERNATIONAL BUILDING CODE

STATEMENT OF SPECIAL INSPECTIONS NOTES:

This Statement of Special Inspections is submitted in accordance with Section 1704 of the 2012 International Building Code (referenced hereforth as Code). It includes a *Schedule of Special Inspection Services* applicable to the Project. If applicable, it includes *Requirements for Seismic Resistance* and/or *Requirements for Wind Resistance*.

The Owner shall employ one or more qualified Special Inspectors to perform this work. The Special Inspector(s) shall keep records of all inspections and shall furnish interim inspection reports to the Building Official and to the Registered Design Professional in Responsible Charge. Discrepancies shall be brought to the immediate attention of the Contractor for correction. If the discrepancies are not corrected, the discrepancies shall be brought to the attention of the Building Official and the Registered Design Professional in Responsible Charge prior to completion of that phase of work. A *Final Report of Special Inspections* documenting required special inspections and corrections of any discrepancies noted in the inspections shall be submitted to the Building Official and the Registered Design Professional in Responsible Charge at the conclusion of the project.

The Special Inspection program does not relieve the Contractor of responsibility to comply with the Contract Documents. Jobsite safety and means and methods of construction are solely the responsibility of the Contractor.

See specifications for additional testing requirements. Where conflicts occur, the most stringent requirement shall control.

INSPECTION OF FABRICATORS:

Where fabrication of structural load-bearing members and assemblies is being performed on the premises of a fabricator's shop, special inspection of the fabricated items shall be required by Section 1704.2 and as required elsewhere in the Code.

INSPECTION OF WELDING:

Welding inspection shall be in compliance with AWS D1.1. The basis for welding inspector qualification shall be AWS D1.1.

INSPECTION OF STRUCTURAL STEEL:

Special inspection of structural steel shall be in accordance with the quality assurance inspection requirements of AISC 360.

INSPECTION OF COLD-FORMED STEEL DECK:
Special Inspections and qualification of welding Special Inspectors for cold-formed steel floor and roof deck shall be in accordance with the quality assurance inspection requirements of SDI QA/QC.

INSPECTION OF OPEN-WEB STEEL JOIST:
Special Inspections of open-web steel joists and joist girders in buildings, structures and portions thereof shall be in accordance with Table 1705.2.3.

INSPECTION OF CONCRETE CONSTRUCTION:
Special Inspections and tests of concrete construction shall be performed in accordance with Section 1705.3 of the Code and with Table 1705.3.

Special Inspections of welding and qualifications of Special Inspectors for reinforcing bars shall be in accordance with the requirements of AWS D1.4 for Special Inspection and of AWS D1.4 for Special Inspector qualification.

In the absence of sufficient data or documentation providing evidence of conformance to quality standards for materials in Chapter 19 and 20 of ACI 318, the Building Official shall require testing of materials in accordance with the appropriate standards and criteria for the material in Chapters 19 and 20 of ACI 318.

INSPECTION OF STRUCTURAL MASONRY:

Structural masonry construction shall be inspected and verified in accordance with TMS 402/ACI 530/ASCE 5 and TMS 602/ACI 530.1/ASCE 6 Level B Quality Assurance Program requirements.

INSPECTION OF SOILS:
Special Inspections and tests of existing site soil conditions, fill placement and load-bearing requirements shall be performed in accordance with Section 1705.6 of the Code and Table 1705.6. The approved geotechnical report and the Construction Documents prepared by the Registered Design Professionals shall be used to determine compliance. During fill placement, the Special Inspector shall verify that proper materials and procedures are used in accordance with the provisions of the approved geotechnical report.

SCHEDULE OF SPECIAL INSPECTION SERVICES
TABLE 1705.3: REQUIRED VERIFICATION AND INSPECTION OF CONCRETE CONSTRUCTION

CHECK IF REQD	VERIFICATION AND INSPECTION	CONTINUOUS	PERIODIC
☒	1. Inspection of reinforcing steel, including prestressing tendons, and placement.	---	X
☒	2. Inspection of reinforcing steel welding in accordance with Table 1705.2.2, Item 2b.	---	---
☒	3. Inspection of anchors cast in concrete where allowable loads have been increased or where strength design is used.	---	X
☒	4. Inspection of anchors post-installed in hardened concrete members.	---	X
☒	5. Verifying use of required design mix.	---	X
☒	6. At the time fresh concrete is sampled to fabricate specimens for strength tests, perform slump and air content tests, and determine the temperature of the concrete.	X	---
☒	7. Inspection of concrete and shotcrete placement for proper application techniques.	X	---
☒	8. Inspection for maintenance of specified curing temperature and techniques.	---	X
☐	9. Inspection of prestressed concrete: a. Application of prestressing forces. b. Grouting of bonded prestressing tendons in the seismic-force-resisting system.	X X	---
☒	10. Erection of precast concrete members.	---	X
☐	11. Verification of in-situ concrete strength, prior to stressing of tendons in post-tensioned concrete and prior to removal of shores and forms from beams and structural slabs.	---	X
☒	12. Inspect formwork for shape, location, and dimensions of the concrete member being formed.	---	X

SCHEDULE OF SPECIAL INSPECTION SERVICES
TABLE 1705.6: REQUIRED VERIFICATION AND INSPECTION OF SOILS

CHECK IF REQD	VERIFICATION AND INSPECTION	CONTINUOUS	PERIODIC
☐	1. Verify materials below shallow foundations are adequate to achieve the design bearing capacity.	---	X
☒	2. Verify excavations are extended to proper depth and have reached proper material.	---	X
☒	3. Perform classification and testing of compacted fill materials.	---	X
☒	4. Verify use of proper materials, densities, and lift thicknesses during placement and compaction of controlled fill.	X	---
☒	5. Prior to placement of controlled fill, observe subgrade and verify that site has been prepared properly.	---	X

SCHEDULE OF SPECIAL INSPECTION SERVICES
TABLE 1705.8: REQUIRED VERIFICATION AND INSPECTION OF CAST-IN-PLACE DEEP FOUNDATION ELEMENTS

CHECK IF REQD	VERIFICATION AND INSPECTION	CONTINUOUS	PERIODIC
☒	1. Observe drilling operations and maintain complete and accurate records for each element.	X	---
☒	2. Verify placement locations and plumbness, confirm element diameters, bell diameters (if applicable), lengths, embedment into bedrock (if applicable), and adequate end-bearing strata capacity. Record concrete or grout volumes.	X	---
	3. For concrete elements, perform additional inspections in accordance with Table 1705.3.	---	---

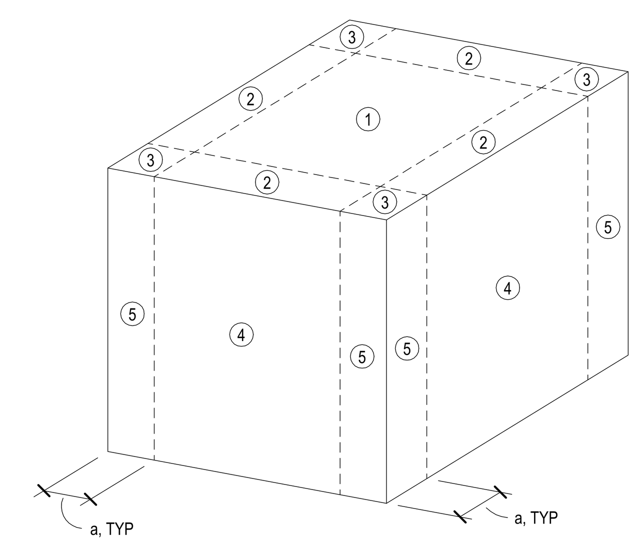

COMPONENTS & CLADDING DESIGN WIND PRESSURE (PSF)												
EFFECTIVE AREA (SQ.FT)	ZONE 1		ZONE 2		ZONE 3		ZONE 4		ZONE 5		PARAPET/SCREEN WALL	
	POS	NEG	POS	NEG	POS	NEG	POS	NEG	POS	NEG	POS	NEG
≤10	16.0	-39.4	36.0	-66.1	36.0	-66.1	36.0	-39.0	36.0	-48.0	90.1	-72.1
50	16.0	-37.0	32.3	-49.7	32.3	-49.7	32.3	-35.3	32.3	-40.6	70.0	-60.9
100	16.0	-36.0	30.7	-42.7	30.7	-42.7	30.7	-33.7	30.7	-37.4	61.4	-56.2
200	16.0	-36.0	29.1	-42.7	29.1	-42.7	29.1	-32.1	29.1	-34.2	59.8	-51.4
≥500	16.0	-36.0	27.0	-42.7	27.0	-42.7	27.0	-30.0	27.0	-30.0	57.7	-45.0

NOTES:

1. WIND LOAD PRESSURES SHOWN IN TABLE ARE ULTIMATE LEVEL LOADS AND ARE BASED ON MAXIMUM PRESSURES FROM ASCE 7-10.
2. MULTIPLY WIND PRESSURES SHOWN BY 0.6 TO CONVERT TO SERVICE LEVEL (ALLOWABLE) LOADS.
3. FOR EFFECTIVE AREAS BETWEEN THOSE GIVEN, WIND PRESSURE SHOWN MAY BE INTERPOLATED.
4. WALL AND ROOF WIND PRESSURES ARE CALCULATED FOR A MEAN ROOF HEIGHT OF 44 FT.
5. PARAPET FORCES ARE CALCULATED FOR A TOP OF PARAPET HEIGHT OF 52 FT.
6. FOR DOORS AND WINDOWS, THE EFFECTIVE AREA IS THE AREA OF THE OPENING.
7. PLUS AND MINUS SIGNS INDICATE PRESSURES ACTING TOWARDS AND AWAY FROM THE BUILDING SURFACE, RESPECTIVELY.
8. a = 10 PERCENT OF LEAST HORIZONTAL DIMENSION OR 0.4 H, WHICHEVER IS SMALLER, BUT NOT LESS THAN EITHER 4 PERCENT OF LEAST HORIZONTAL DIMENSION OR 3FT.
9. A SERVICE (UNFACTORED) DEAD LOAD OF 4 PSF PLUS JOIST SELF WEIGHT MAY BE CONSIDERED WHEN CALCULATING NET ROOF WIND UPLIFT PRESSURES FOR DESIGN OF STEEL ROOF JOISTS.
10. SEE ARCHITECTURAL DRAWINGS AND SPECIFICATIONS FOR UPLIFT PRESSURE FOR DESIGN OF ROOFING SYSTEM.

AB	Anchor Bolt	K-FT	Kip-Feet (Moment)
ADDL	Additional	LBF	Pound-Force
ADJ	Adjacent	LLBB	Long Leg Back-to-Back
AESS	Architectural Exposed Structural Steel	LLH	Long Leg Horizontal
		LLV	Long Leg Vertical
AFF	Above Finished Floor	LSH	Long Side Horizontal
AGGR	Aggregate	LSV	Long Side Vertical
ALT	Alternate	LT	Left
ARCH	Architect(ural)	M	Moment
BL	Building Line	MATL	Material
BL	Brick Ledge	MAX	Maximum
BLDG	Building	MECH	Mechanical
BLK	Block	MEP	Mech/Elec/Plumbing
BM	Beam	MFR	Manufacturer
BOT, B	Bottom	MIN	Minimum
BRG	Bearing	MK	Mark
BTWN	Between	MTL	Metal
C	Channel	NIC	Not in Contract
CFMF	Cold-Formed Metal Framing	NO	Number
CGS	Center of Gravity of Steel	NS	Near Side
CIP	Cast-in-Place	NSG	Non-Shrink Grout
CJ	Construction Joint	NTS	Not to Scale
CL	Center Line	OC	On Center
CMU	Concrete Masonry	OF	Outside Face
COL	Column	OP HD	Opposite Hand
COMP	Compression	OPNG	Opening
CONC	Concrete	P	Pan (form)
CONN	Connect(ion)	P-T	Post-Tensioning
CONSTR	Construction	PCC	Precast Concrete
CONT	Continuous	PEN	Penetration
COORD	Coordinate	PI	Plasticity Index
CTR	Center	PIL	Pilaster
CW	Curtain Wall	PL	Plate
db	Bar Diameter(s)	PNL	Panel
DBA	Deformed Bar Anchor	PSF	Pounds Per Square Foot
DEG	Degree(s)	PSI	Pounds Per Square Inch
DET	Detail	PT	Point
DIA or Ø	Diameter	R	Radius
DIM	Dimension	RECT	Rectangle(ular)
DWG	Drawing	REF	Refer (to)
DWL	Dowel	REINF	Reinforcing
EA	Each	REQD	Required
EF	Each Face	RT	Right
EJ	Expansion Joint	SC	Slip-Critical
EL	Elevation	SCHED	Schedule
ELEV	Elevator	SECT	Section
ENGR	Engineer	SHT	Sheet
EQ	Equal	SIM	Similar
EW	Each Way	SOG	Slab-on-Grade
EXP BT	Expansion Bolt	SPA	Space(ing)
EXST	Existing	SPEC	Specifications
EXT	Exterior	SQ	Square
F	Force (Axial)	ST	Stirrup(s)
FABR	Fabricator	STD	Standard
FDTN	Foundation	STIF	Stiffener
FIN	Finish	STL	Steel
FIN FLR, FF	Finish Floor	STRUCT	Structure(al)
FLR	Floor	SUPPT	Support
FS	Far Side	SYMM	Symmetrical
FV	Field Verify	T	Tension
GC	General Contractor	T&B	Top and Bottom
GN	General Notes	TEMP	Temperature
GR	Grade	TOC	Top of Concrete
GR BM	Grade Beam	TOF	Top of Footing
HORIZ, H	Horizontal	TOJ	Top of Joist
HSA	Headed Stud Anchor	TOP	Top of Pile
HSS	Hollow Structural Section	TOS	Top of Steel
HT	Height	TOW	Top of Wall
IF	Inside Face	TYP	Typical
INFO	Information	ULT	Ultimate (force)
INT	Interior	UNO	Unless Noted Otherwise
INTERM	Intermediate	V	Shear
JST	Joist	VERT, V	Vertical
JT	Joint	WD	Wood
K	Kip (1,000 pounds)	WP	Working or Work Point

STANDARD ABBREVIATIONS

DETAIL REFERENCE NUMBER

21	17	13	9	5	1
22	18	14	10	6	2
23	19	15	11	7	3
24	20	16	12	8	4

DETAIL SHEET LAYOUT

SYMBOL LEGEND

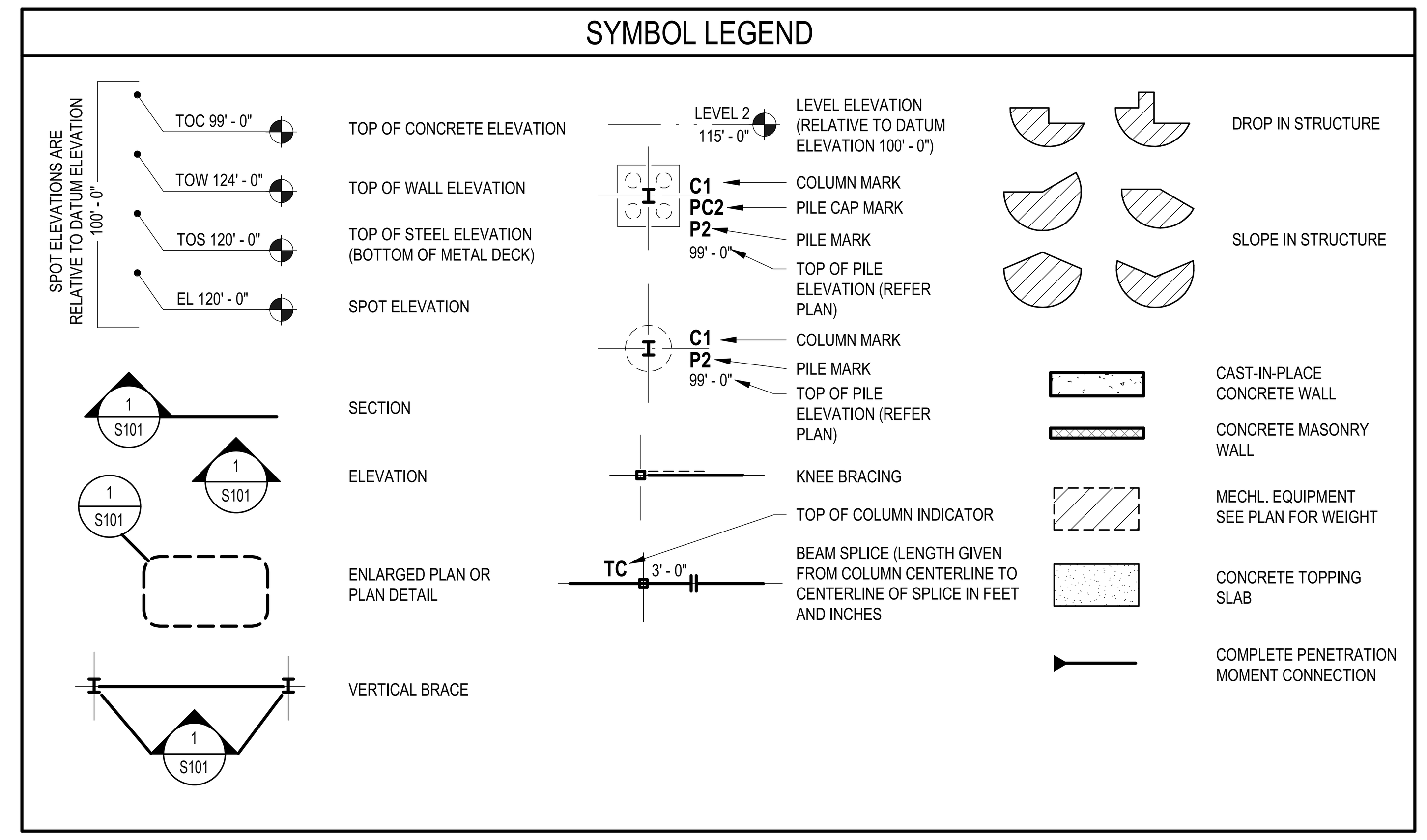

L.A. FUESS PARTNERS, INC.
Structural Engineers
3333 Lee Parkway, Suite 300 • Dallas, TX 75219
214.871.7010 • www.lafp.com
LAFP PROJECT NO. 19100 FIRM REG. NO. F-537

Architect: Brinkley Sargent Wiginton Architects (972) 960-9970
Landscape: Kendall Landscape Architecture (214) 739-3226
Structural: L.A. Fuess Partners, Inc (214)
MEP: M-E Engineers (214) 741-1589
Civil: KSA Engineers, Inc (903) 236-7700
Technology: M-E Engineers (303) 421-6656
BRINKLEY SARGENT WIGINTON ARCHITECTS

LONGVIEW POLICE DEPARTMENT
XXXX SOUTH ST. LONGVIEW, TEXAS 75601

History		
#	Date	Description

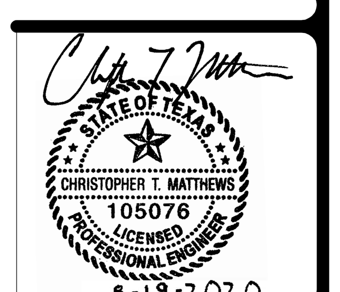

STATEMENT OF SPECIAL INSPECTIONS

BID ISSUE

20513
08/19/2020
S102

8/17/2020 11:08:24 AM
C:\Temp\19100 - LongviewPoliceBuilding-R19_jveurinkJSFLP.rvt

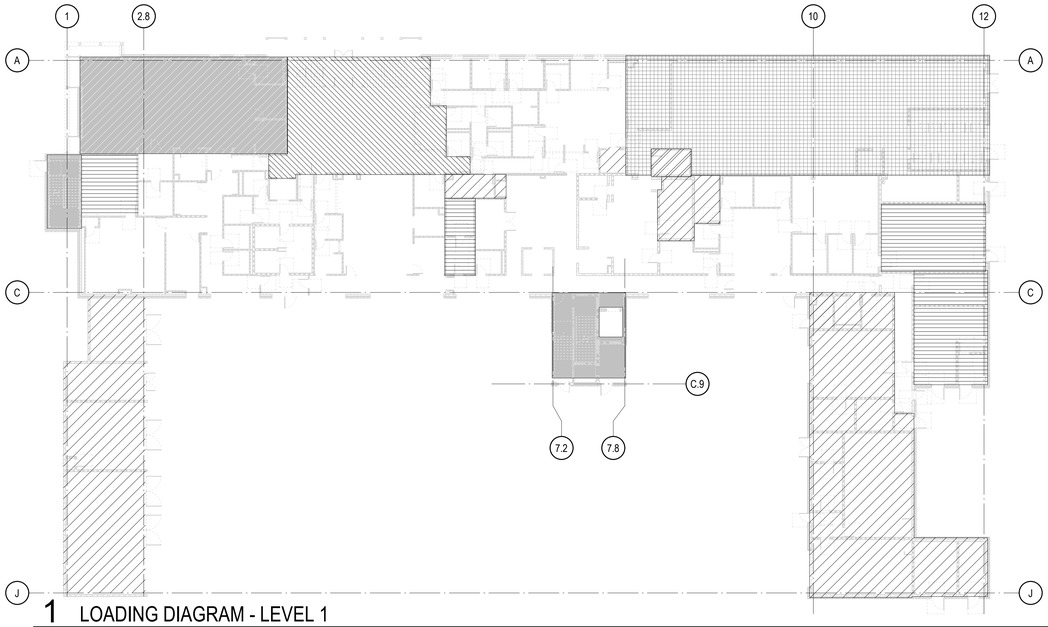

1 LOADING DIAGRAM - LEVEL 1

1" = 20'-0"

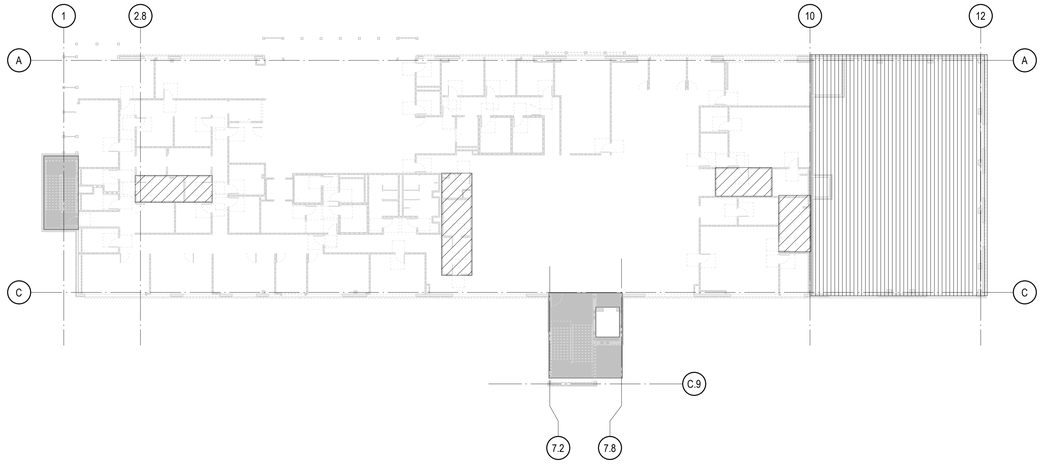

3 LOADING DIAGRAM - LEVEL 3

1" = 20'-0"

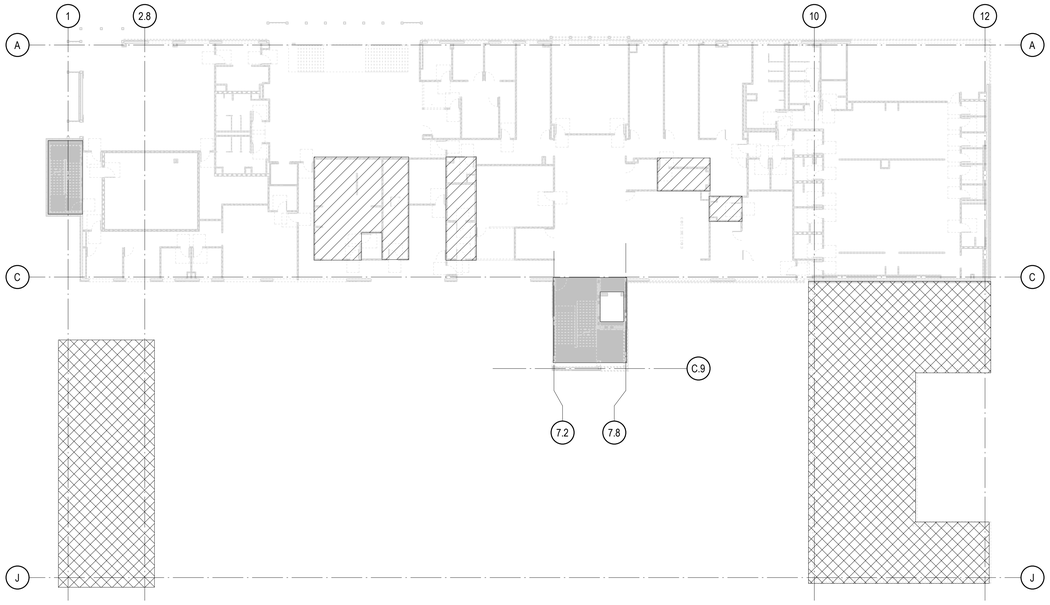

2 LOADING DIAGRAM - LEVEL 2

1" = 20'-0"

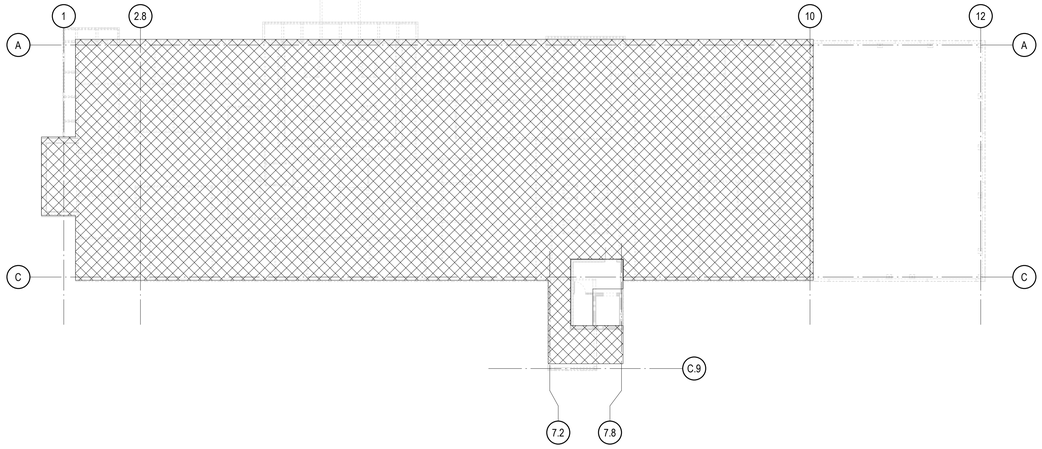

4 LOADING DIAGRAM - ROOF

1" = 20'-0"

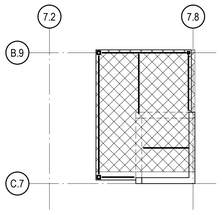

5 LOADING DIAGRAM - PENTHOUSE ROOF

1" = 10'-0"

PATTERN / DESCRIPTION	SUPERIMPOSED DEAD LOAD (1)	LIVE LOAD	NOTES
TYPICAL	10 PSF	100 PSF	2,4
MECHANICAL & ELECTRICAL ROOMS	10 PSF	150 PSF	3
STAIRS AND ELEVATOR LOBBIES	10 PSF	100 PSF	
LOBBY AT LEVEL 1	10 PSF	100 PSF	
LIGHT STORAGE	10 PSF	125 PSF	
ROOF	18 PSF	20 PSF	2
ROOF MECHANICAL ZONE	18 PSF	20 PSF	3
WALK IN COOLER	65 PSF	125 PSF	3
HEAVY STORAGE	10 PSF	250 PSF	3
RAISED ACCESS FLOOR	35 PSF	100 PSF	2

NOTES:
1. SUPERIMPOSED DEAD LOAD = FLOORING (OR ROOFING) ABOVE AND SUSPENDED ITEMS BELOW (CEILINGS, SPRINKLER PIPING, DUCTWORK, LIGHTS, ELECTRICAL ETC.)
2. LIVE LOAD HAS BEEN REDUCED WHERE ALLOWED BY CODE.
3. OR WEIGHT OF EQUIPMENT (THE HEAVIER)
4. ADDITIONAL 50 PSF SDL FOR TOPPING SLAB WHERE APPLICABLE, SEE FRAMING PLANS.

L.A. FUESS PARTNERS, INC.
Structural Engineers
3333 Lee Parkway, Suite 300 • Dallas, TX 75219
214.871.7030 • www.lafp.com
LAFP PROJECT NO. 19100 FIRM REG. NO. F-537

Architect: Brinkley Sargent Wigginton Architects (972) 960-9970
Landscape: Kendall Landscape Architecture (214) 739-3226
Structural: L.A. Fuess Partners, Inc (214)
MEP: M-E Engineers (214) 741-1589
Civil: KSA Engineers, Inc (903) 236-7700
Technology: M-E Engineers (303) 421-6656

BRINKLEY SARGENT WIGINTON ARCHITECTS

LONGVIEW POLICE DEPARTMENT

XXXX SOUTH ST. LONGVIEW, TEXAS 75601

History

#	Date	Description

STATE OF TEXAS
CHRISTOPHER T. MATTHEWS
105076
LICENSED
PROFESSIONAL ENGINEER
8-19-2020

LOADING DIAGRAMS

20513
08/19/2020
S103

BID ISSUE

C:\Temp\19100 - Longview Police Building-R19_jwarren.rvt
8/17/2020 11:05:29 AM

Brinkley Sargent Wiginton Architects, Inc.

AXONOMETRIC VIEWS ARE FOR REFERENCE ONLY AND INTENDED TO SHOW PRIMARY STRUCTURAL ELEMENTS ONLY. VIEWS DO NOT NECESSARILY INCLUDE ELEMENTS SUCH AS MISC STEEL, DECK AND SLABS, OR EXT RAMPS AND STAIRS. REFER TO PLANS, DETAIL SHEETS, AND ARCH DRAWINGS FOR ADDL INFORMATION.

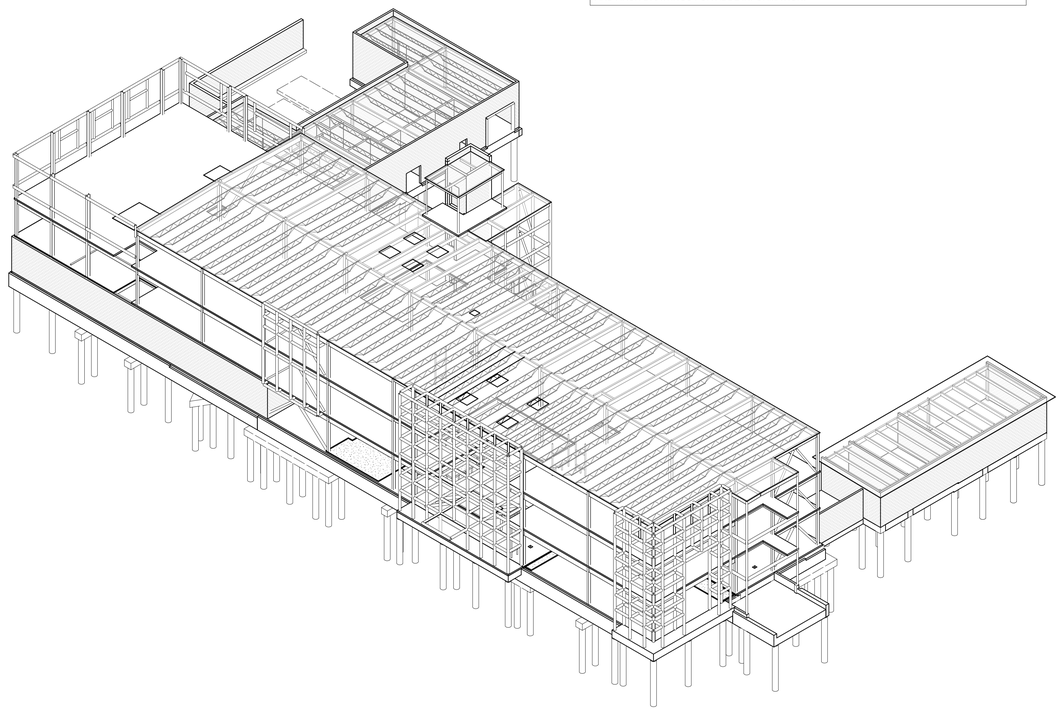

1 AXONOMETRIC VIEW - NORTHWEST

AXONOMETRIC VIEWS ARE FOR REFERENCE ONLY AND INTENDED TO SHOW PRIMARY STRUCTURAL ELEMENTS ONLY. VIEWS DO NOT NECESSARILY INCLUDE ELEMENTS SUCH AS MISC STEEL, DECK AND SLABS, OR EXT RAMPS AND STAIRS. REFER TO PLANS, DETAIL SHEETS, AND ARCH DRAWINGS FOR ADDL INFORMATION.

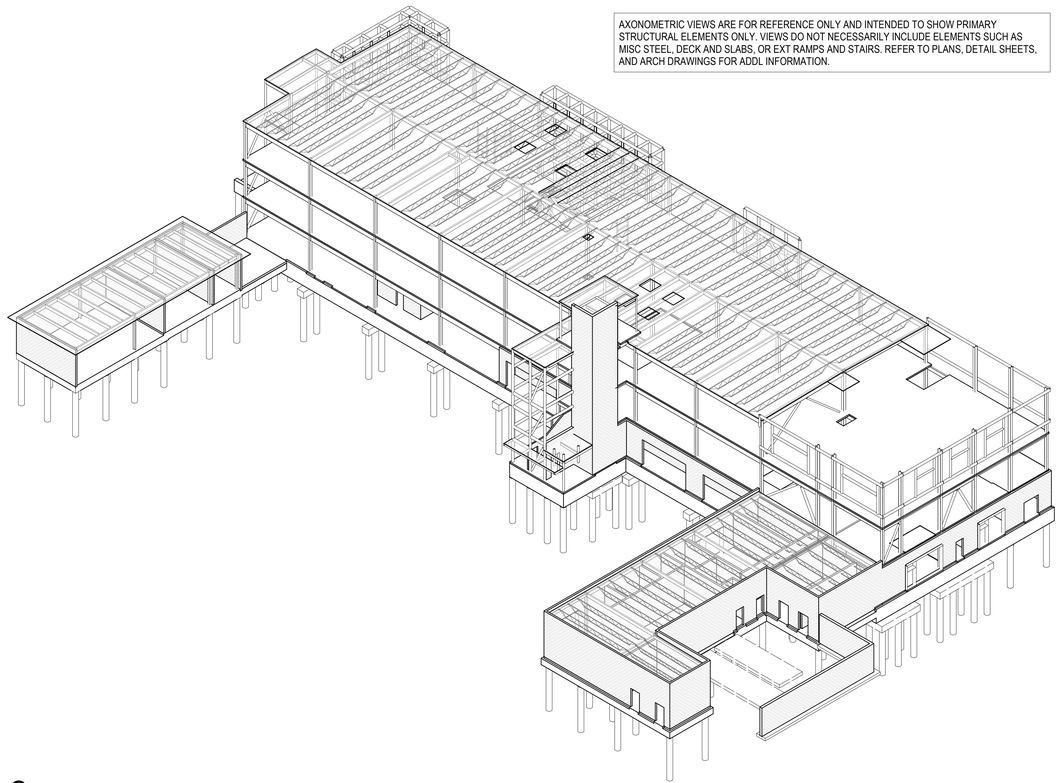

2 AXONOMETRIC VIEW - SOUTHEAST

L.A. FUESS PARTNERS, INC.
Structural Engineers
3333 Lee Parkway, Suite 300 • Dallas, TX 75219
214.871.7010 • www.lafp.com
LAFP PROJECT NO. 19100 FIRM REG. NO. F-537

Architect: Brinkley Sargent Wiginton Architects (972) 960-9970
Landscape: Kendall Landscape Architecture (214) 739-3226
Structural: L.A. Fuess Partners, Inc (214)
MEP: M-E Engineers (214) 741-1589
Civil: KSA Engineers, Inc (903) 236-7700
Technology: M-E Engineers (303) 421-6656

BRINKLEY SARGENT WIGINTON ARCHITECTS

LONGVIEW POLICE DEPARTMENT

XXXX SOUTH ST. LONGVIEW, TEXAS 75601

History

#	Date	Description

STATE OF TEXAS
CHRISTOPHER T. MATTHEWS
105076
LICENSED
PROFESSIONAL ENGINEER
8-19-2020

AXONOMETRIC VIEWS

BID ISSUE

20513
08/19/2020
S104

C:\Temp\19100 - LongviewPoliceBuilding-R19_jsweinschEPLP.rvt
8/17/2020 11:08:39 AM

Brinkley Sargent Wiginton Architects, Inc.

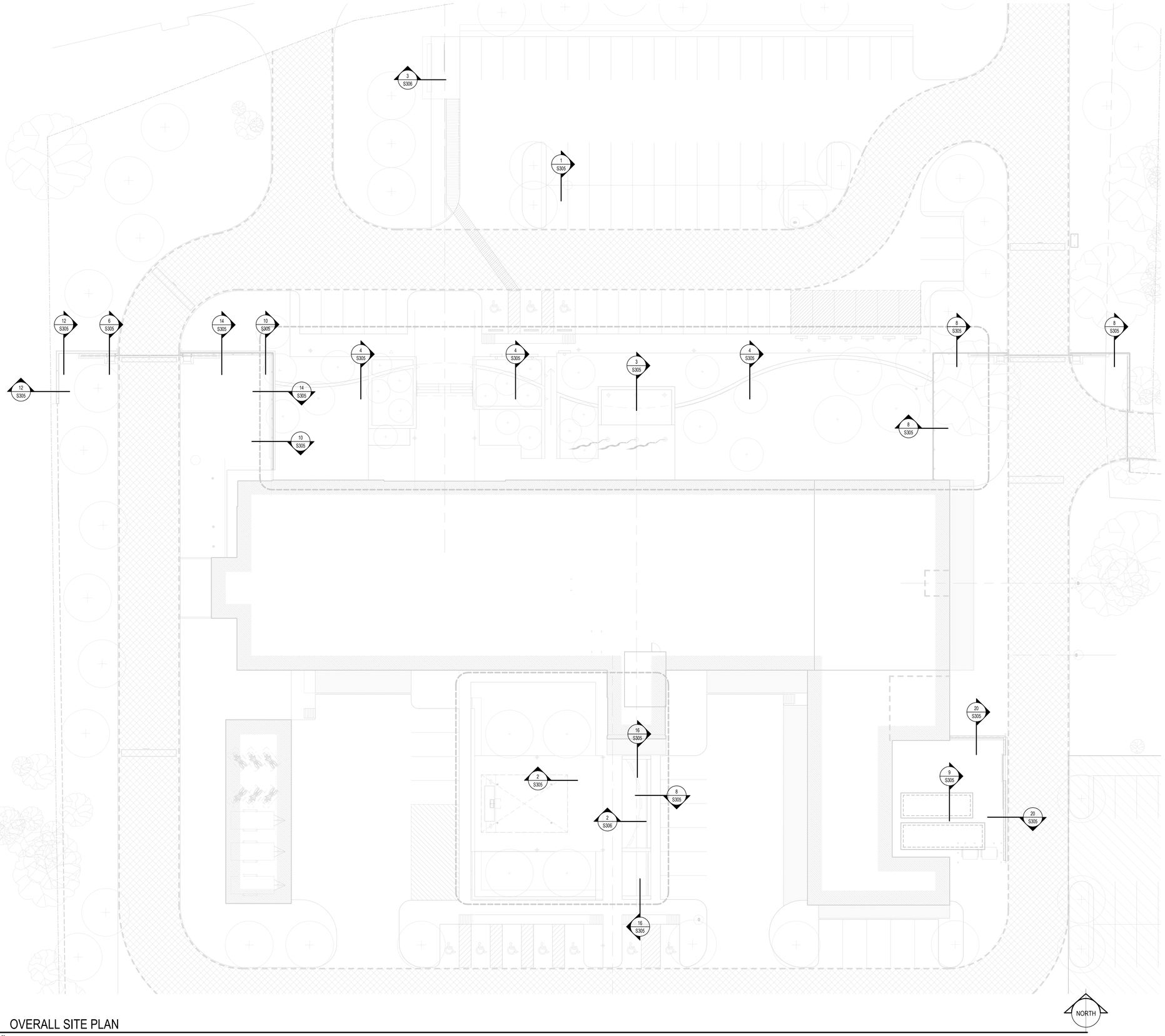

1 OVERALL SITE PLAN

1/16" = 1'-0"

Architect: Brinkley Sargent Wigintion Architects (972) 960-9970
Landscape: Kendall Landscape Architecture (214) 739-3226
Structural: L.A. Fuess Partners, Inc (214)
MEP: M-E Engineers (214) 741-1589
Civil: KSA Engineers, Inc (903) 236-7700
Technology: M-E Engineers (303) 421-6656

BRINKLEY SARGENT WIGINTON ARCHITECTS

LONGVIEW POLICE DEPARTMENT

XXXX SOUTH ST. LONGVIEW, TEXAS 75601

History		
#	Date	Description

STATE OF TEXAS
CHRISTOPHER T. MATTHEWS
105076
LICENSED
PROFESSIONAL ENGINEER
8-19-2020

0VERALL SITE PLAN

BID ISSUE

L.A. FUESS PARTNERS, INC.
Structural Engineers
3333 Lee Parkway, Suite 300 • Dallas, TX 75219
214.871.7010 • www.lafp.com
LAFP PROJECT NO. 19100 FIRM REG. NO. F-537

20513
08/19/2020
S110

8/17/2020 11:08:43 AM
C:\Temp\19100 - LongviewPoliceBuilding-R19_jsweirich2917.rvt

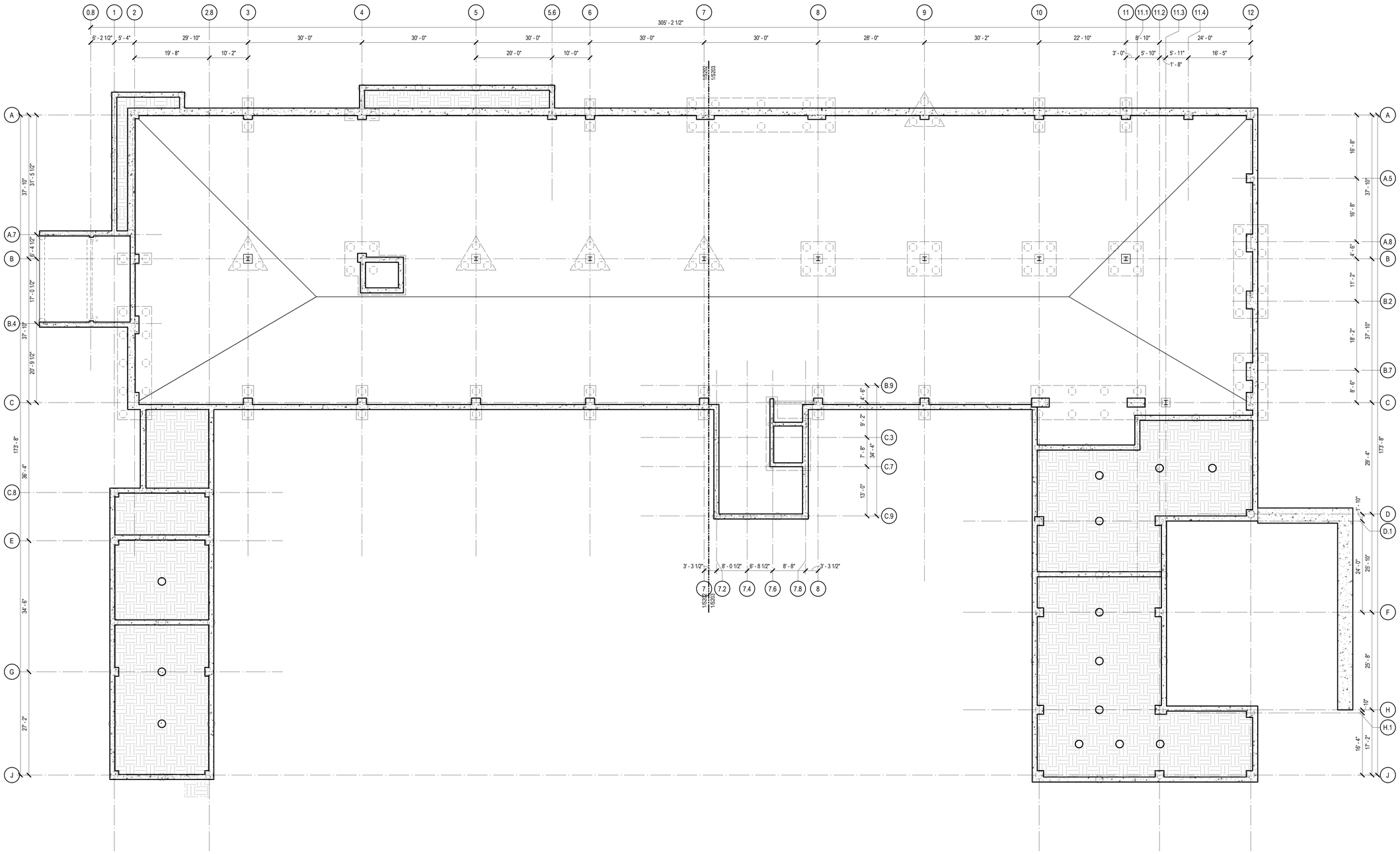

1 LEVEL CRAWL SPACE - OVERALL FOUNDATION PLAN

3/32" = 1'-0"

Architect: Brinkley Sargent Wigginton Architects (972) 960-9970
Landscape: Kendall Landscape Architecture (214) 739-3226
Structural: L.A. Fuess Partners, Inc (214)
MEP: M-E Engineers (214) 741-1589
Civil: KSA Engineers, Inc (903) 236-7700
Technology: M-E Engineers (303) 421-6656

BRINKLEY SARGENT WIGGINTON ARCHITECTS

LONGVIEW POLICE DEPARTMENT

XXXX SOUTH ST. LONGVIEW, TEXAS 75601

History		
#	Date	Description

STATE OF TEXAS
CHRISTOPHER T. MATTHEWS
105076
LICENSED
PROFESSIONAL ENGINEER
8-19-2020

LEVEL CRAWL SPACE - OVERALL FOUNDATION PLAN

L.A. FUESS PARTNERS, INC.
Structural Engineers
3333 Lee Parkway, Suite 300 • Dallas, TX 75219
214.871.7030 • www.lafp.com
LAFP PROJECT NO. 19100 FIRM REG. NO. F-537

20513
08/19/2020
S201

BID ISSUE

E:\Temp\19100 - LongviewPoliceBuilding-R19_revmrsu2923.rvt
8/17/2020 11:08:43 AM

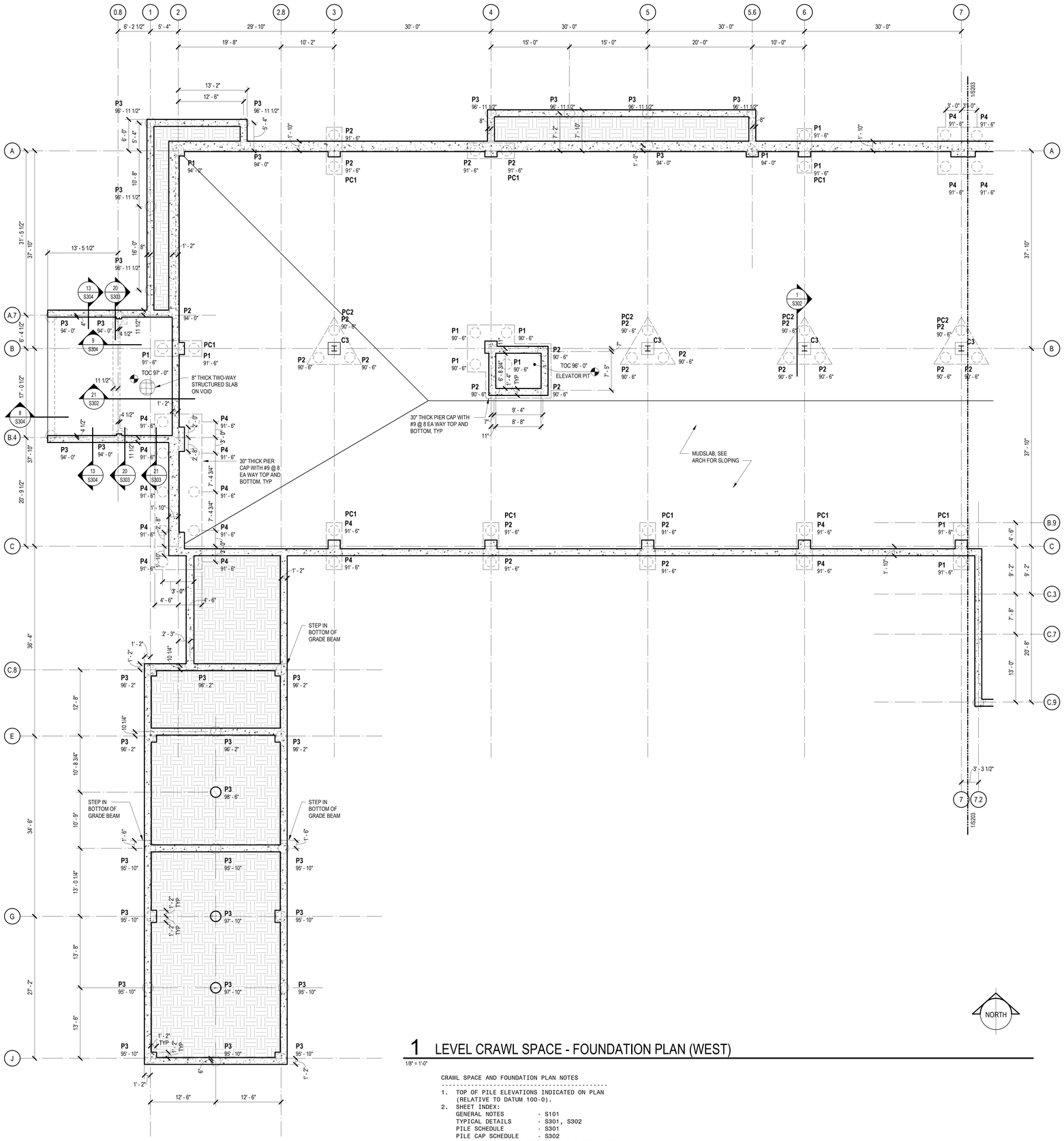

1 LEVEL CRAWL SPACE - FOUNDATION PLAN (WEST)

1/8" = 1'-0"

CRAWL SPACE AND FOUNDATION PLAN NOTES

1. TOP OF PILE ELEVATIONS INDICATED ON PLAN (RELATIVE TO DATUM 100-0).
2. SHEET INDEX:
   - GENERAL NOTES - S101
   - TYPICAL DETAILS - S301, S302
   - PILE SCHEDULE - S301
   - PILE CAP SCHEDULE - S302
3. TYPICAL MUD SLAB THICKNESS IS 3 INCHES, SEE ARCH DWGS FOR ELEVATIONS AND SLOPE.

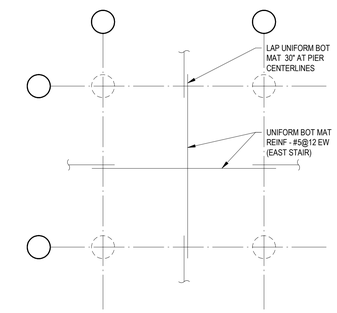

2 TWO WAY UNIFORM MAT BOT REINF

3/4" = 1'-0"

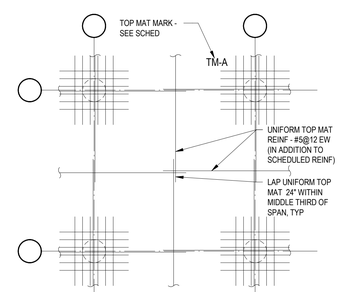

3 TWO WAY UNIFORM TOP MAT REINF

3/4" = 1'-0"

L.A. FUESS PARTNERS, INC.
Structural Engineers
3333 Lee Parkway, Suite 300 • Dallas, TX 75219
214.871.7010 • www.lafp.com
LAFP PROJECT NO. 19100 FIRM REG. NO. F-537

BRINKLEY SARGENT WIGINTON ARCHITECTS

Architect: Brinkley Sargent Wigginton Architects (972) 960-9970
Landscape: Kendall Landscape Architecture (214) 739-3226
Structural: L.A. Fuess Partners, Inc (214)
MEP: M-E Engineers (214) 741-1589
Civil: KSA Engineers, Inc (903) 236-7700
Technology: M-E Engineers (303) 421-6656

LONGVIEW POLICE DEPARTMENT

XXXX SOUTH ST. LONGVIEW, TEXAS 75601

History		
#	Date	Description

STATE OF TEXAS
CHRISTOPHER T. MATTHEWS
105076
LICENSED
PROFESSIONAL ENGINEER
8-19-2020

LEVEL CRAWL SPACE - FOUNDATION PLAN (WEST)

20513
08/19/2020

S202

BID ISSUE

C:\Temp\19100 - LongviewPoliceBuilding-R19_jsaurina@SKP.rvt
8/17/2020 11:08:47 AM

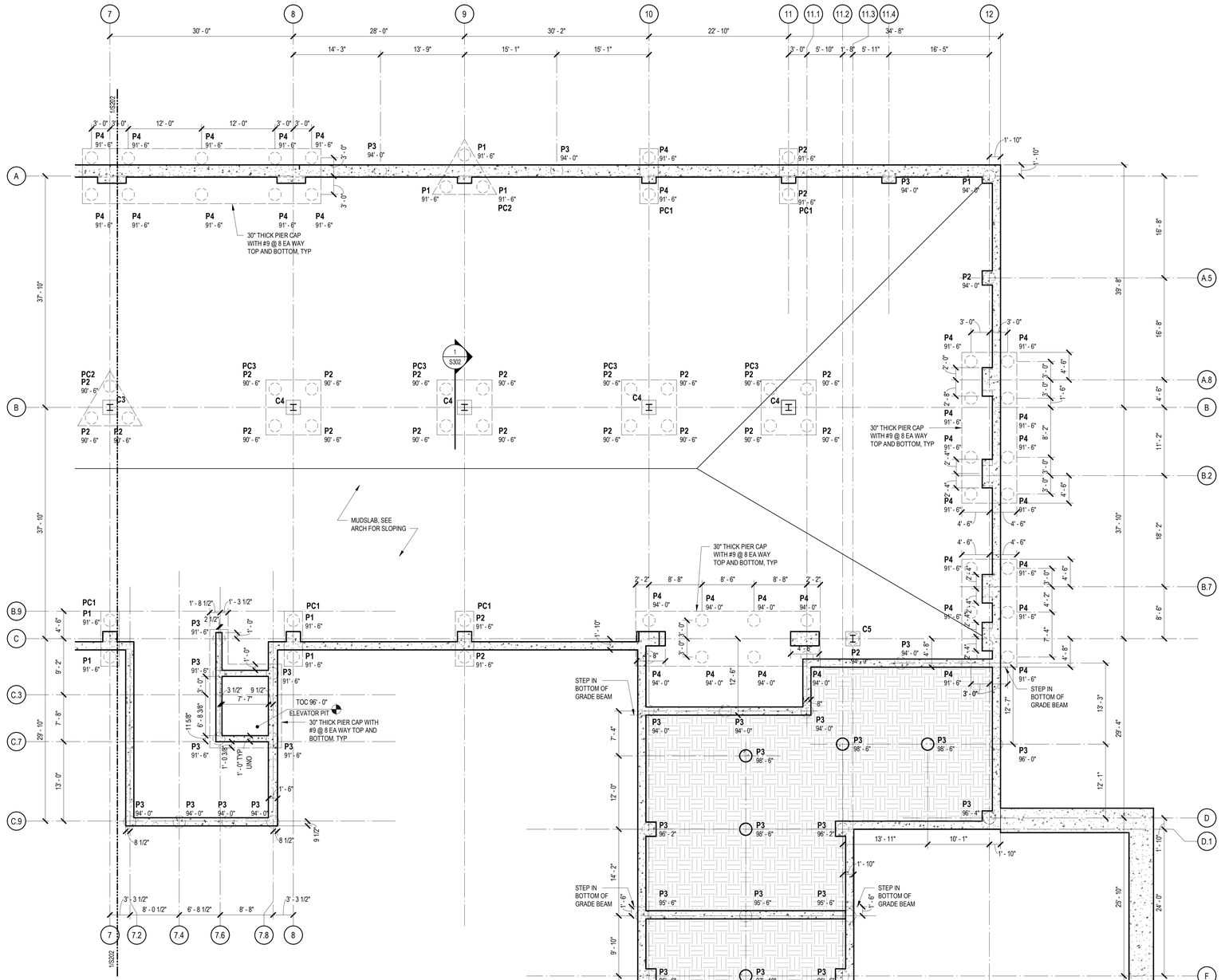

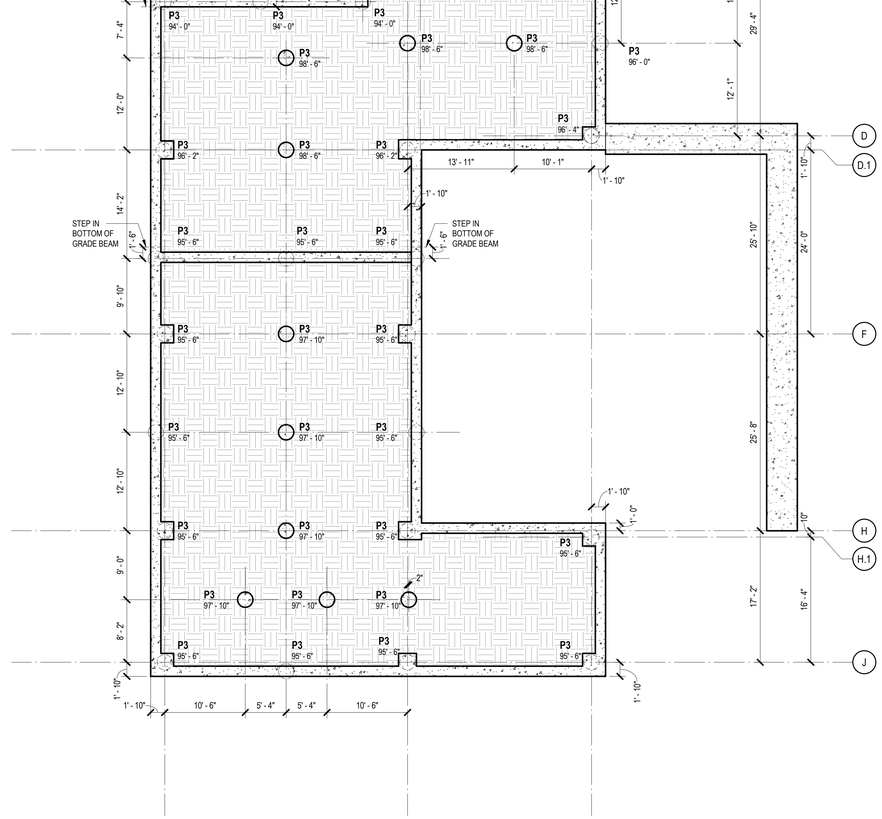

1 LEVEL CRAWL SPACE - FOUNDATION PLAN (EAST)

1/8" = 1'-0"

CRAWL SPACE AND FOUNDATION PLAN NOTES

1. TOP OF PILE ELEVATIONS INDICATED ON PLAN (RELATIVE TO DATUM 100-0).
2. SHEET INDEX:
   GENERAL NOTES - S101
   TYPICAL DETAILS - S301, S302
   PILE SCHEDULE - S301
   PILE CAP SCHEDULE - S302
3. TYPICAL MUD SLAB THICKNESS IS 3 INCHES, SEE ARCH DWGS FOR ELEVATIONS AND SLOPE.

L.A. FUESS PARTNERS, INC.
Structural Engineers
3333 Lee Parkway, Suite 300 • Dallas, TX 75219
214.871.7010 • www.lafp.com
LAFP PROJECT NO. 19100 FIRM REG. NO. F-537

BRINKLEY SARGENT WIGINTON ARCHITECTS

Architect: Brinkley Sargent Wigginton Architects (972) 960-9970
Landscape: Kendall Landscape Architecture (214) 739-3226
Structural: L.A. Fuess Partners, Inc (214)
MEP: M-E Engineers (214) 741-1589
Civil: KSA Engineers, Inc (903) 236-7700
Technology: M-E Engineers (303) 421-6656

LONGVIEW POLICE DEPARTMENT

XXXX SOUTH ST. LONGVIEW, TEXAS 75601

History		
#	Date	Description

STATE OF TEXAS
CHRISTOPHER T. MATTHEWS
105076
LICENSED
PROFESSIONAL ENGINEER
8-19-2020

LEVEL CRAWL SPACE - FOUNDATION PLAN (EAST)

20513
08/19/2020
S203

BID ISSUE

E:\Temp\19100 - Longview Police Dept\dwg-R19_psw\mod\S203.rvt
8/17/2020 11:08:48 AM

Brinkley Sargent Wigginton Architects, Inc.

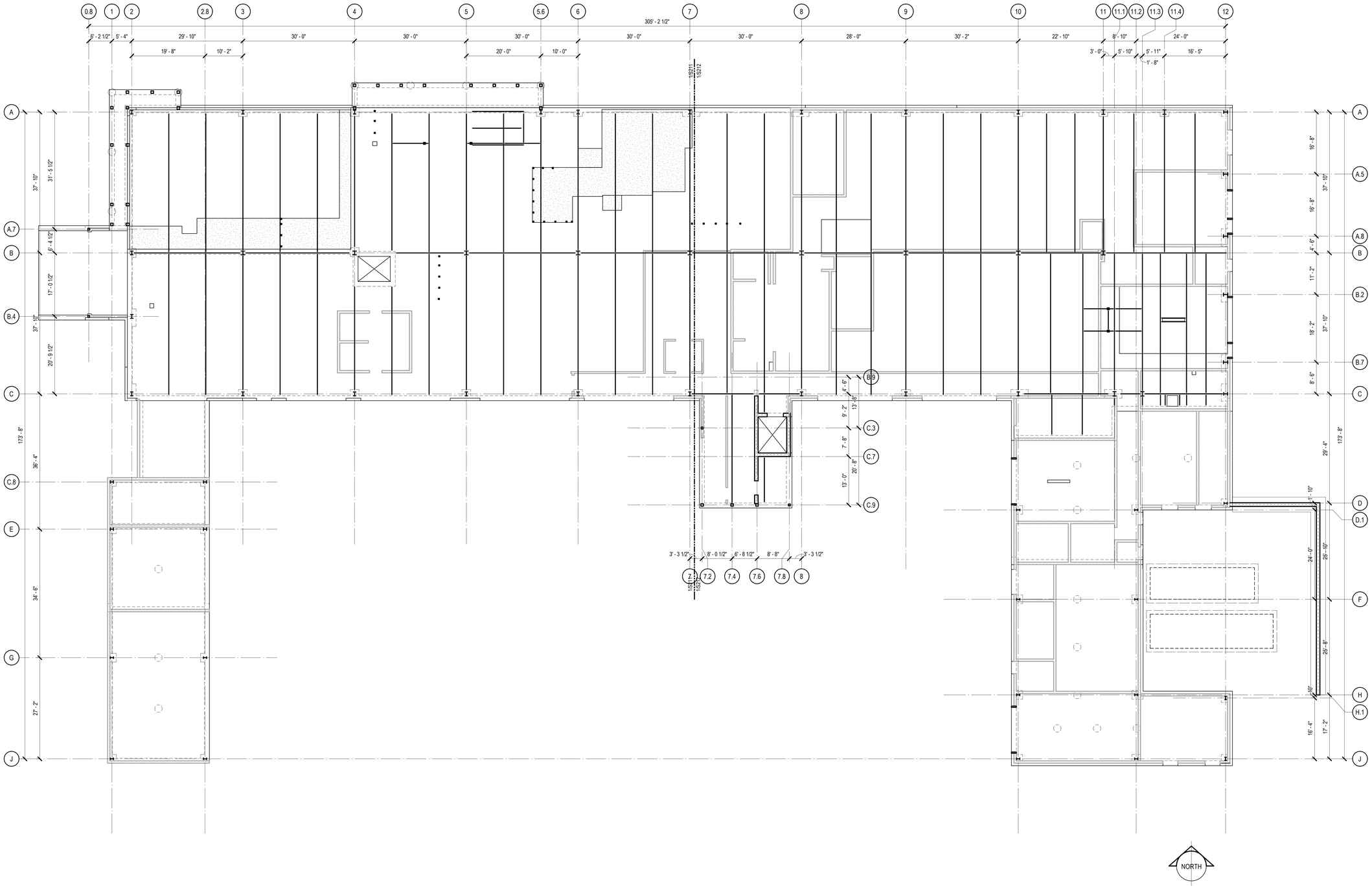

1 LEVEL 1 - OVERALL FRAMING PLAN

3/32" = 1'-0"

Architect: Brinkley Sargent Wigginton Architects (972) 960-9970
Landscape: Kendall Landscape Architecture (214) 739-3226
Structural: L.A. Fuess Partners, Inc (214)
MEP: M-E Engineers (214) 741-1589
Civil: KSA Engineers, Inc (903) 236-7700
Technology: M-E Engineers (303) 421-6656

BRINKLEY SARGENT WIGGINTON ARCHITECTS

LONGVIEW POLICE DEPARTMENT

XXXX SOUTH ST. LONGVIEW, TEXAS 75601

History		
#	Date	Description

STATE OF TEXAS
CHRISTOPHER T. MATTHEWS
105076
LICENSED
PROFESSIONAL ENGINEER
8-19-2020

LEVEL 1 - OVERALL FRAMING PLAN

BID ISSUE

L.A. FUESS PARTNERS, INC.
Structural Engineers
3333 Lee Parkway, Suite 300 • Dallas, TX 75219
214.871.7030 • www.lafp.com
LAFP PROJECT NO. 19100 FIRM REG. NO. F-537

20513
08/19/2020
S210

8/17/2020 11:08:50 AM
C:\temp\19100 - Longview Police Building - R19_jsaurino@SKIP.rvt

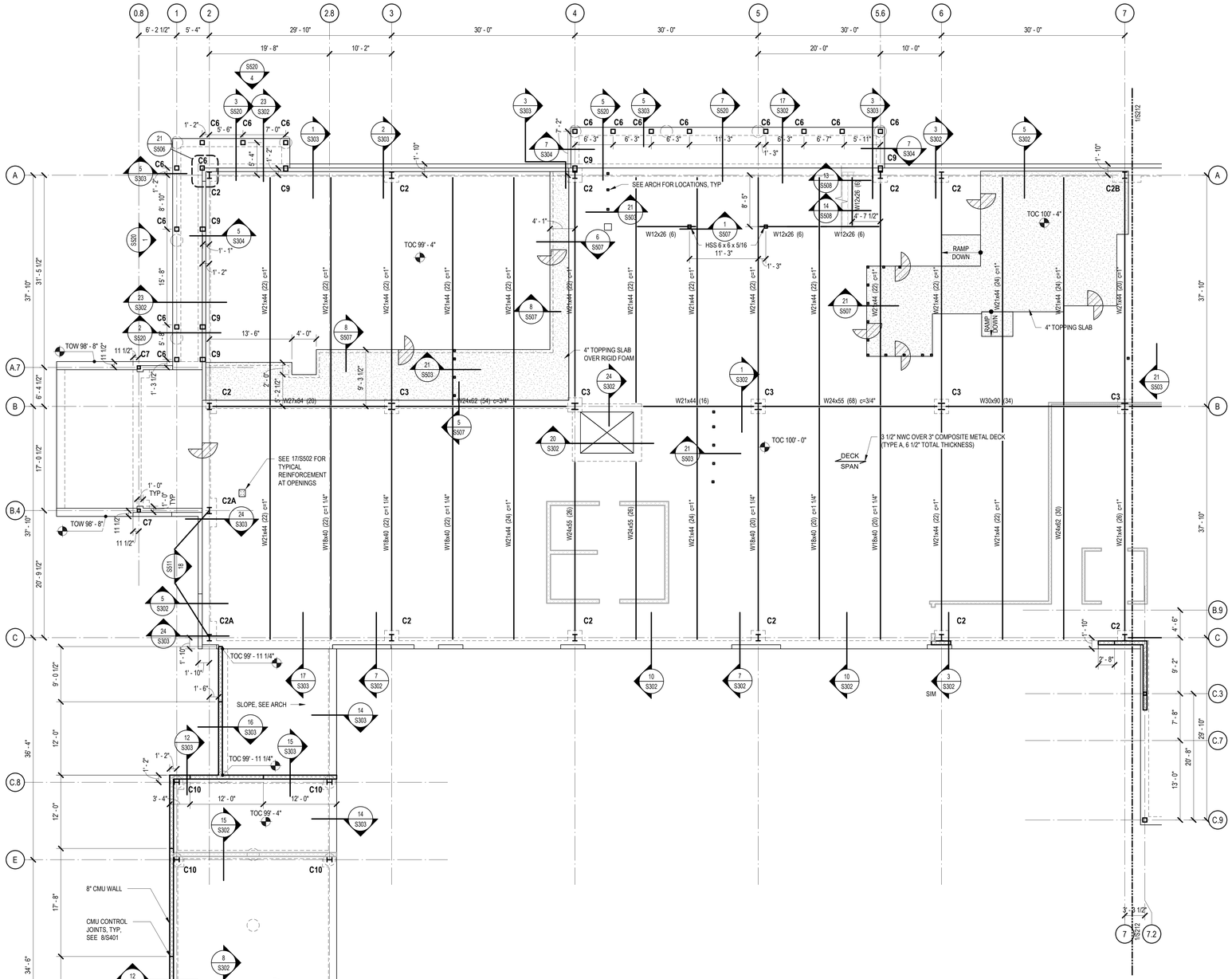

1 LEVEL 1 - FRAMING PLAN (WEST)

1/8" = 1'-0"

LEVEL 1 PLAN NOTES

1. FINISH FLOOR ELEVATION IS 100'-0" (RELATIVE TO DATUM 100'-0").
2. TOP OF CONCRETE SLAB IS FINISH FLOOR UNLESS SHOWN OTHERWISE.
3. SHEET INDEX:
   - GENERAL NOTES - S101
   - TYPICAL DETAILS - S301, S401, S501
   - PILE SCHEDULE - S301
   - STEEL COLUMN SCHEDULE - S501
   - VERTICAL BRACES - S502
4. TYPICAL COMPOSITE CONCRETE SLAB THICKNESS IS 6 1/2" (OVERALL)UNLESS NOTED OTHERWISE.
5. TYPICAL SLAB ON VOID THICKNESS IS 10"(OVERALL) UNLESS NOTED OTHERWISE
6. UNLESS SHOWN OTHERWISE, STEEL BEAMS ARE CENTERED ON AND EQUALLY SPACED BETWEEN COLUMN CENTERLINES.
7. NUMBER OF SHEAR STUDS IS NOTED IN PARENTHESES ( ) ADJACENT TO BEAM SIZES. SEE TYPICAL DETAILS FOR LAYOUT REQUIREMENTS OF STUDS.
8. INCHES OF BEAM CAMBER, WHERE REQUIRED, ARE NOTED BY "c=xx" ADJACENT TO BEAM SIZE.
9. STEEL IN CRAWL SPACE TO BE HOT-DIP GALVANIZED.
10. REFER TO ARCHITECTURAL DRAWINGS FOR EXTENT OF FIRE SPRAY PROOFING AT STEEL MEMBERS

TOP MAT REINFORCING SCHEDULE

TOP BAR MARK	BAR TYPE
TM-A	2#5(12'-0")@12 EA WAY

1. TOP MATS SCHEDULED ABOVE ARE IN ADDITION TO UNIFORM MATS
4. BAR TYPES DESIGNATION DENOTES NUMBER OF BARS/ BAR SIZE/ BAR LENGTH/ BAR SPACING OC
5. TOP MATS ARE CENTERED ON CENTERLINE OF PIER/SLAB SUPPORT
6. TOP MAT REINFORCEMENT ELEVATION IS TO MATCH UNIFORM MAT REINFORCING BARS SPANNING IN THE SAME DIRECTION
7. SEE 2/S212, AND 3/S212 FOR TYP PLACEMENT DETAILS
8. PROVIDE MINIMUM BAR SPACING OF 1" BETWEEN ADJACENT BARS FROM UNIFORM AND SCHED MATS

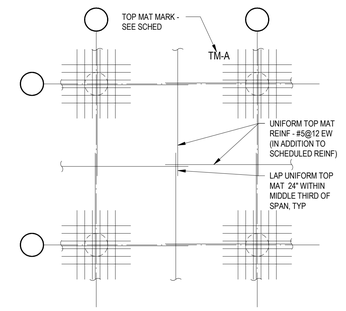

2 TWO WAY UNIFORM TOP MAT REINF

3/4" = 1'-0"

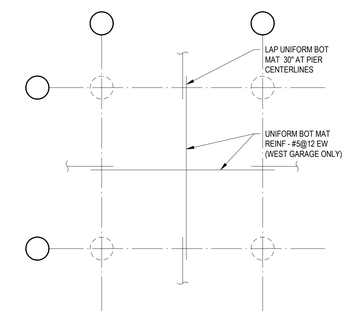

3 TWO WAY UNIFORM MAT BOT REINF

3/4" = 1'-0"

Architect: Brinkley Sargent Wigginton Architects (972) 960-9970
Landscape: Kendall Landscape Architecture (214) 739-3226
Structural: L.A. Fuess Partners, Inc (214)
MEP: M-E Engineers (214) 741-1589
Civil: KSA Engineers, Inc (903) 236-7700
Technology: M-E Engineers (303) 421-6656

BRINKLEY SARGENT WIGINTON ARCHITECTS

LONGVIEW POLICE DEPARTMENT

XXXX SOUTH ST. LONGVIEW, TEXAS 75601

History

#	Date	Description

STATE OF TEXAS
CHRISTOPHER T. MATTHEWS
105076
LICENSED PROFESSIONAL ENGINEER
8-19-2020

LEVEL 1 - FRAMING PLAN (WEST)

BID ISSUE

L.A. FUESS PARTNERS, INC.
Structural Engineers
3333 Lee Parkway, Suite 300 • Dallas, TX 75219
214.871.7010 • www.lafp.com
LAFP PROJECT NO. 19100 FIRM REG. NO. F-537

20513
08/19/2020
S211

8/17/2020 11:08:51 AM
C:\temp\19100 - Longview Police Building-R19_revit\S211P.rvt

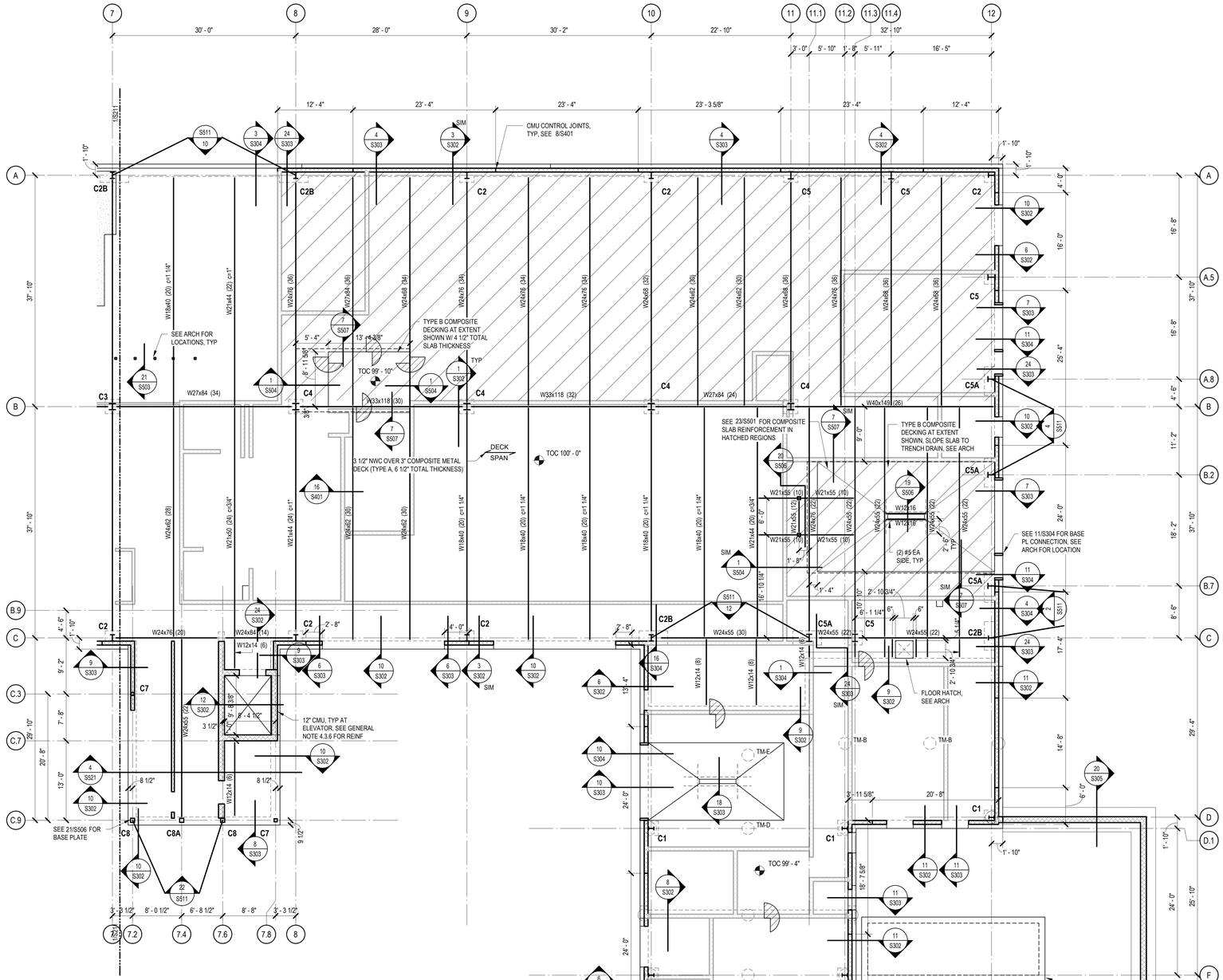

1 LEVEL 1 - FRAMING PLAN (EAST)

1/8" = 1'-0"

LEVEL 1 PLAN NOTES

1. FINISH FLOOR ELEVATION IS 100'-0" (RELATIVE TO DATUM 100'-0").
2. TOP OF CONCRETE SLAB IS FINISH FLOOR UNLESS SHOWN OTHERWISE.
3. SHEET INDEX:
   - GENERAL NOTES - S101
   - TYPICAL DETAILS - S301, S401, S501
   - PILE SCHEDULE - S301
   - STEEL COLUMN SCHEDULE - S501
   - VERTICAL BRACES - S502
4. TYPICAL COMPOSITE CONCRETE SLAB THICKNESS IS 6 1/2" (OVERALL)UNLESS NOTED OTHERWISE.
5. TYPICAL SLAB ON VOID THICKNESS IS 10"(OVERALL) UNLESS NOTED OTHERWISE
6. UNLESS SHOWN OTHERWISE, STEEL BEAMS ARE CENTERED ON AND EQUALLY SPACED BETWEEN COLUMN CENTERLINES.
7. NUMBER OF SHEAR STUDS IS NOTED IN PARENTHESES ( ) ADJACENT TO BEAM SIZES. SEE TYPICAL DETAILS FOR LAYOUT REQUIREMENTS OF STUDS.
8. INCHES OF BEAM CAMBER, WHERE REQUIRED, ARE NOTED BY "c=xx" ADJACENT TO BEAM SIZE.
9. STEEL IN CRAWL SPACE TO BE HOT-DIP GALVANIZED.
10. REFER TO ARCHITECTURAL DRAWINGS FOR EXTENT OF FIRE SPRAY PROOFING AT STEEL MEMBERS

TOP MAT REINFORCING SCHEDULE

TOP BAR MARK	BAR TYPE
TM-A	2#5(12'-0")@12 EA WAY
TM-B	3#5(12'-0")@12 EA WAY
TM-C	4#5(12'-0")@12 EA WAY
TM-D	5#5(12'-0")@12 EA WAY
TM-E	3#5(9'-0")@12 EA WAY

1. TOP MATS SCHEDULED ABOVE ARE IN ADDITION TO UNIFORM MATS
4. BAR TYPES DESIGNATION DENOTES NUMBER OF BARS/ BAR SIZE/ BAR LENGTH/ BAR SPACING OC
5. TOP MATS ARE CENTERED ON CENTERLINE OF PIER/SLAB SUPPORT
6. TOP MAT REINFORCEMENT ELEVATION IS TO MATCH UNIFORM MAT REINFORCING BARS SPANNING IN THE SAME DIRECTION
7. SEE 2/S212, AND 3/S212 FOR TYP PLACEMENT DETAILS
8. PROVIDE MINIMUM BAR SPACING OF 1" BETWEEN ADJACENT BARS FROM UNIFORM AND SCHED MATS

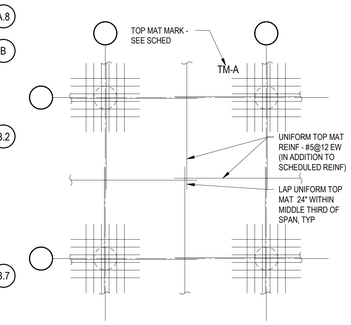

2 TWO WAY UNIFORM TOP MAT REINF

3/4" = 1'-0"

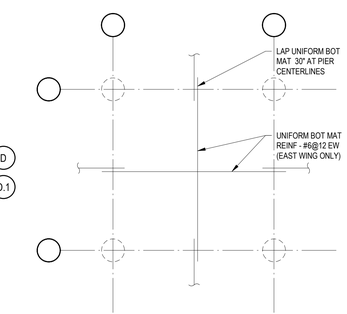

3 TWO WAY UNIFORM MAT BOT REINF

3/4" = 1'-0"

L.A. FUESS PARTNERS, INC.
Structural Engineers
3333 Lee Parkway, Suite 300 • Dallas, TX 75219
214.871.7010 • www.lafp.com
LAFP PROJECT NO. 19100 FIRM REG. NO. F-537

BRINKLEY SARGENT WIGGINTON ARCHITECTS

Architect: Brinkley Sargent Wigginton Architects (972) 960-9970
Landscape: Kendall Landscape Architecture (214) 739-3226
Structural: L.A. Fuess Partners, Inc (214)
MEP: M-E Engineers (214) 741-1589
Civil: KSA Engineers, Inc (903) 236-7700
Technology: M-E Engineers (303) 421-6656

LONGVIEW POLICE DEPARTMENT

XXXX SOUTH ST. LONGVIEW, TEXAS 75601

History		
#	Date	Description

STATE OF TEXAS
CHRISTOPHER T. MATTHEWS
105076
LICENSED
PROFESSIONAL ENGINEER
6-19-2020

LEVEL 1 - FRAMING PLAN (EAST)

20513
08/19/2020
S212

BID ISSUE

C:\temp\19100 - LongviewPoliceBuilding-R19_jsaurman32FLP.rvt
6/17/2020 11:08:52 AM

Brinkley Sargent Wigginton Architects, Inc.

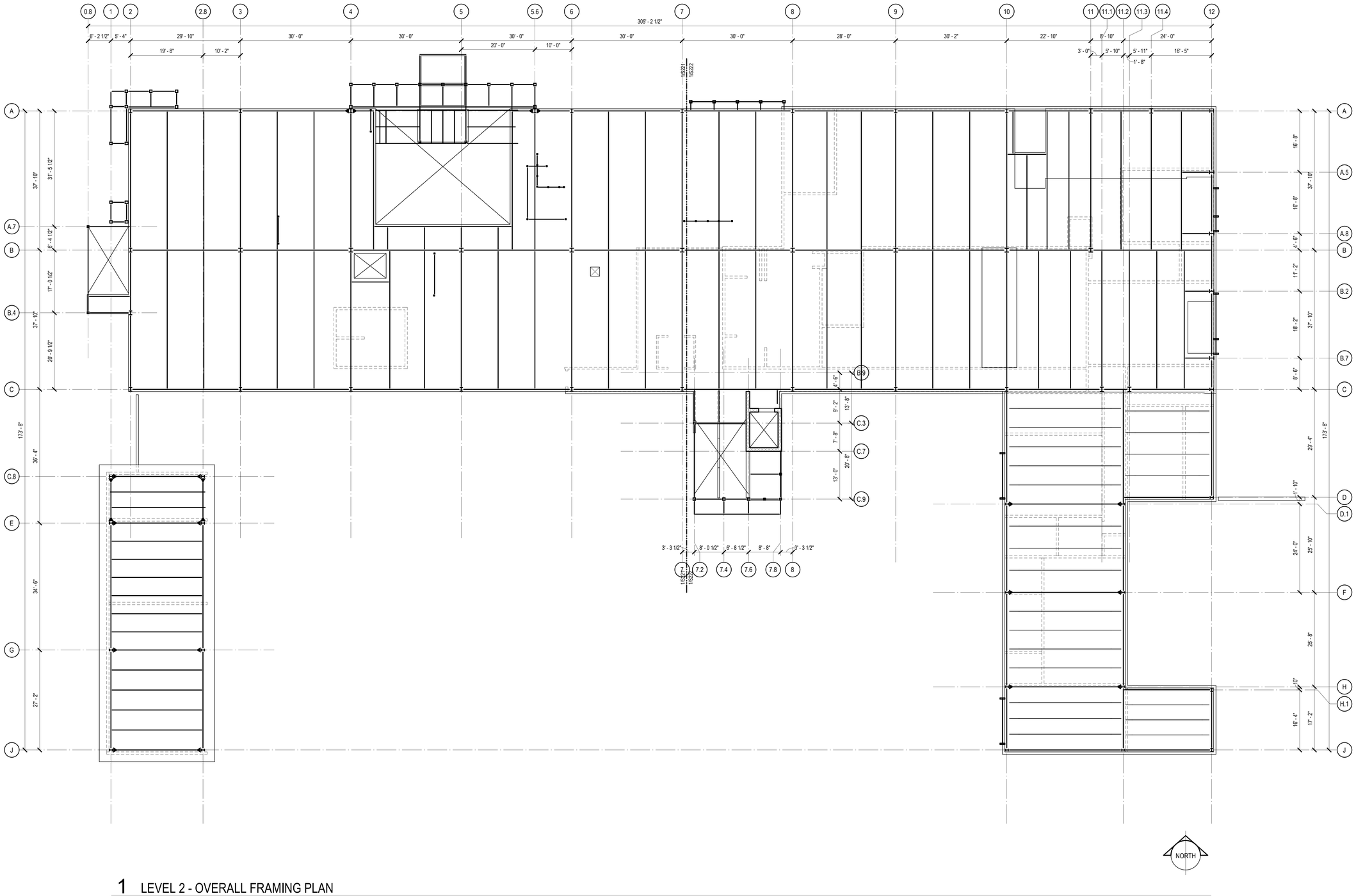

1 LEVEL 2 - OVERALL FRAMING PLAN

3/32" = 1'-0"

Architect: Brinkley Sargent Wigginton Architects (972) 960-9970
Landscape: Kendall Landscape Architecture (214) 739-3226
Structural: L.A. Fuess Partners, Inc (214)
MEP: M-E Engineers (214) 741-1589
Civil: KSA Engineers, Inc (903) 236-7700
Technology: M-E Engineers (303) 421-6656

BRINKLEY SARGENT WIGINTON ARCHITECTS

LONGVIEW POLICE DEPARTMENT

XXXX SOUTH ST. LONGVIEW, TEXAS 75601

History		
#	Date	Description

STATE OF TEXAS
CHRISTOPHER T. MATTHEWS
105076
LICENSED PROFESSIONAL ENGINEER
8-19-2020

LEVEL 2 - OVERALL FRAMING PLAN

BID ISSUE

L.A. FUESS PARTNERS, INC.
Structural Engineers
3333 Lee Parkway, Suite 300 • Dallas, TX 75219
214.871.7010 • www.lafp.com
LAFP PROJECT NO. 19100 FIRM REG. NO. F-537

20513
08/19/2020
S220

8/17/2020 11:08:53 AM

C:\Temp\19100 - Longview\Revit\building-241p_revitmep58125.rvt

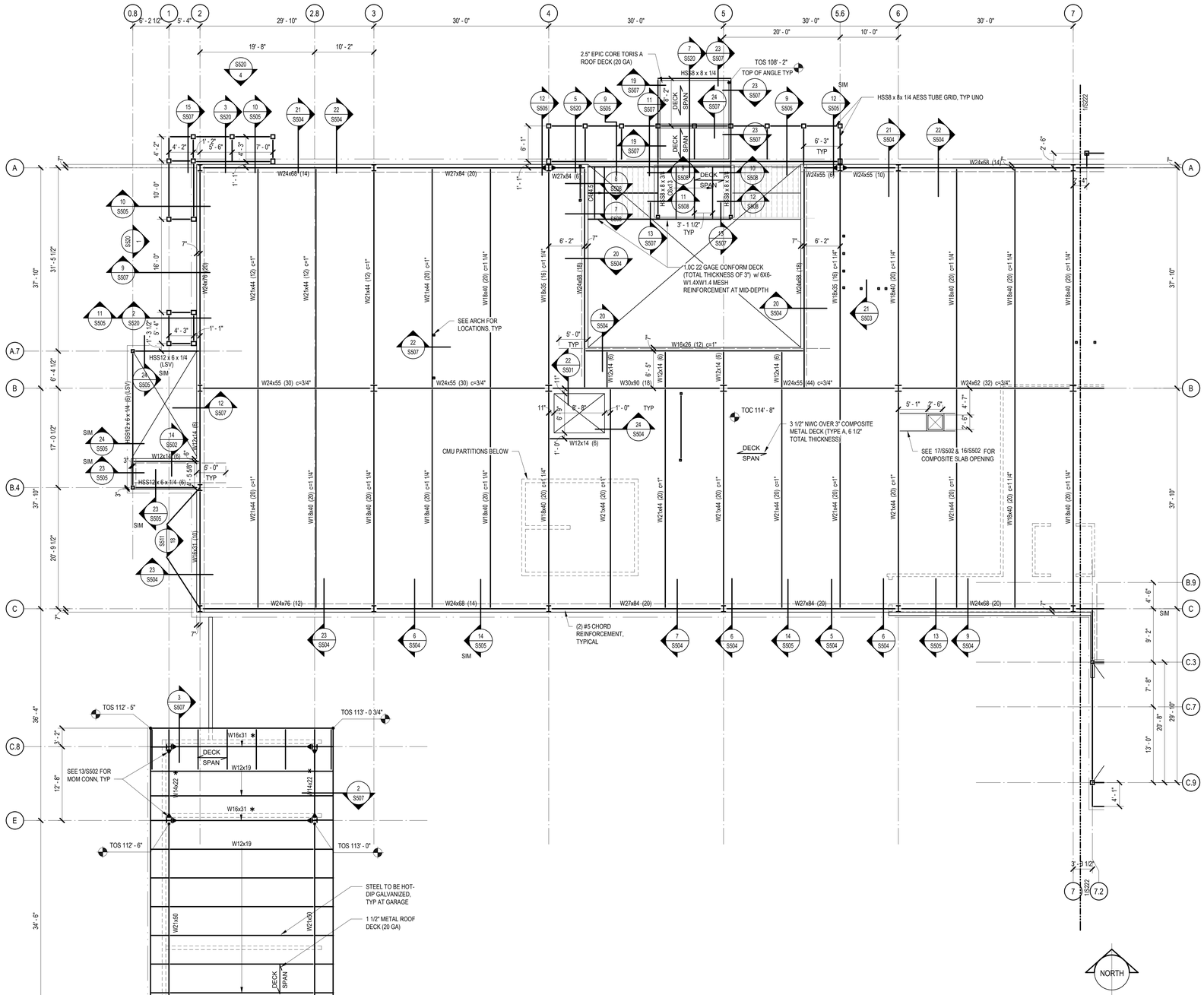

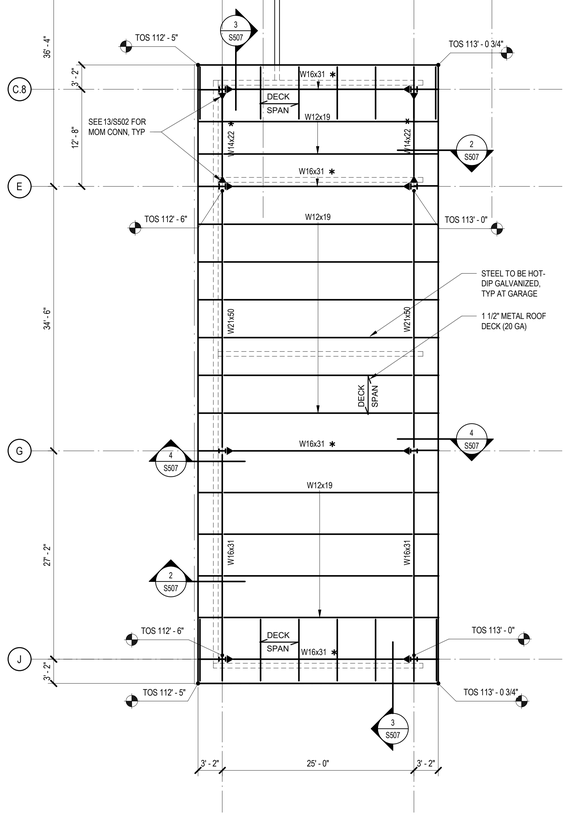

1 LEVEL 2 - FRAMING PLAN (WEST)

1/8" = 1'-0"

LEVEL 2 PLAN NOTES

1. FINISH FLOOR ELEVATION IS 114'-8" (RELATIVE TO DATUM 100'-0").
2. TOP OF CONCRETE SLAB IS FINISH FLOOR UNLESS SHOWN OTHERWISE.
3. SHEET INDEX:
   GENERAL NOTES - S101
   TYPICAL DETAILS - S301, S401, S501
   PILE SCHEDULE - S301
   STEEL COLUMN SCHEDULE - S501
   VERTICAL BRACES - S502
4. TYPICAL CONCRETE SLAB THICKNESS IS 6 1/2" (OVERALL) UNLESS NOTED OTHERWISE.
5. UNLESS SHOWN OTHERWISE, STEEL BEAMS ARE CENTERED ON AND EQUALLY SPACED BETWEEN COLUMN CENTERLINES.
6. NUMBER OF SHEAR STUDS IS NOTED IN PARENTHESES ( ) ADJACENT TO BEAM SIZES. SEE TYPICAL DETAILS FOR LAYOUT REQUIREMENTS OF STUDS.
7. INCHES OF BEAM CAMBER, WHERE REQUIRED, ARE NOTED BY "c=xx" ADJACENT TO BEAM SIZE.
8. HEAVY CONNECTIONS, WHERE REQUIRED ARE DENOTED BY "HC" ON PLAN ADJACENT TO BEAM SIZE.
9. REFER TO ARCHITECTURAL DRAWINGS FOR EXTENT OF FIRE SPRAY PROOFING AT STEEL MEMBERS

LOW ROOF PLAN NOTES

1. TOP OF ROOF STRUCTURE IS SLOPED FOR DRAINAGE. SEE ELEVATIONS NOTED ON THE PLAN. SLOPES SHALL BE UNIFORM BETWEEN COLUMN CENTERLINES UNLESS SHOWN OTHERWISE.
2. TOP OF STEEL ELEVATIONS SHOWN ON PLAN ARE BOTTOM OF DECK (TOP OF BEAM OR JOIST) ELEVATIONS, UNLESS NOTED OTHERWISE.
3. SHEET INDEX:
   GENERAL NOTES - S101
   TYPICAL DETAILS - S301, S401, S501
   STEEL COLUMN SCHEDULE - S501
   VERTICAL BRACES - S502
4. UNLESS NOTED OTHERWISE, STEEL BEAMS/JOISTS SHALL BE CENTERED ON AND EQUALLY SPACED BETWEEN COLUMN CENTERLINES.
5. SEE SHEET S103 FOR NET UPLIFT WIND LOADING FOR ROOF JOIST DESIGN.
6. ARROW TIP DENOTES LOW END OF BOTTOM FLANGE BRACE, SEE S/S503.
7. JOISTS SUPPORTING MECHANICAL EQUIPMENT SHALL BE DESIGNED FOR TYPICAL ROOF LOADING PLUS A CONCENTRATED LOAD OF 60% OF INDICATED EQUIPMENT WEIGHT PLACED AT ANY PANEL POINT.
8. JOISTS NOTED AS "SP" ARE SPECIAL DESIGNS TO BE PROVIDED BY SUPPLIER FOR LOADINGS INDICATED.
9. BEAMS INDICATED WITH AN "*" ASTERISK ON PLAN ADJACENT TO BEAM SIZE ARE COLLECTOR BEAMS. DESIGN COLLECTOR CONNECTIONS FOR FACTORED AXIAL LOADS INDICATED ON DETAIL .

L.A. FUESS PARTNERS, INC.
Structural Engineers
3333 Lee Parkway, Suite 300 • Dallas, TX 75219
214.871.7010 • www.lafp.com
LAFP PROJECT NO. 19100 FIRM REG. NO. F-537

BRINKLEY SARGENT WIGINTON ARCHITECTS
Architect: Brinkley Sargent Wigginton Architects (972) 960-9970
Landscape: Kendall Landscape Architecture (214) 739-3226
Structural: L.A. Fuess Partners, Inc (214)
MEP: M-E Engineers (214) 741-1589
Civil: KSA Engineers, Inc (903) 236-7700
Technology: M-E Engineers (303) 421-6656

LONGVIEW POLICE DEPARTMENT

XXXX SOUTH ST. LONGVIEW, TEXAS 75601

History		
#	Date	Description

STATE OF TEXAS
CHRISTOPHER T. MATTHEWS
105076
LICENSED
PROFESSIONAL ENGINEER
6-19-2020

LEVEL 2 - FRAMING PLAN (WEST)

BID ISSUE

20513
08/19/2020
S221

C:\Temp\19100 - LongviewPoliceBuilding-R19_jwarnock2019.rvt
6/17/2020 11:08:54 AM

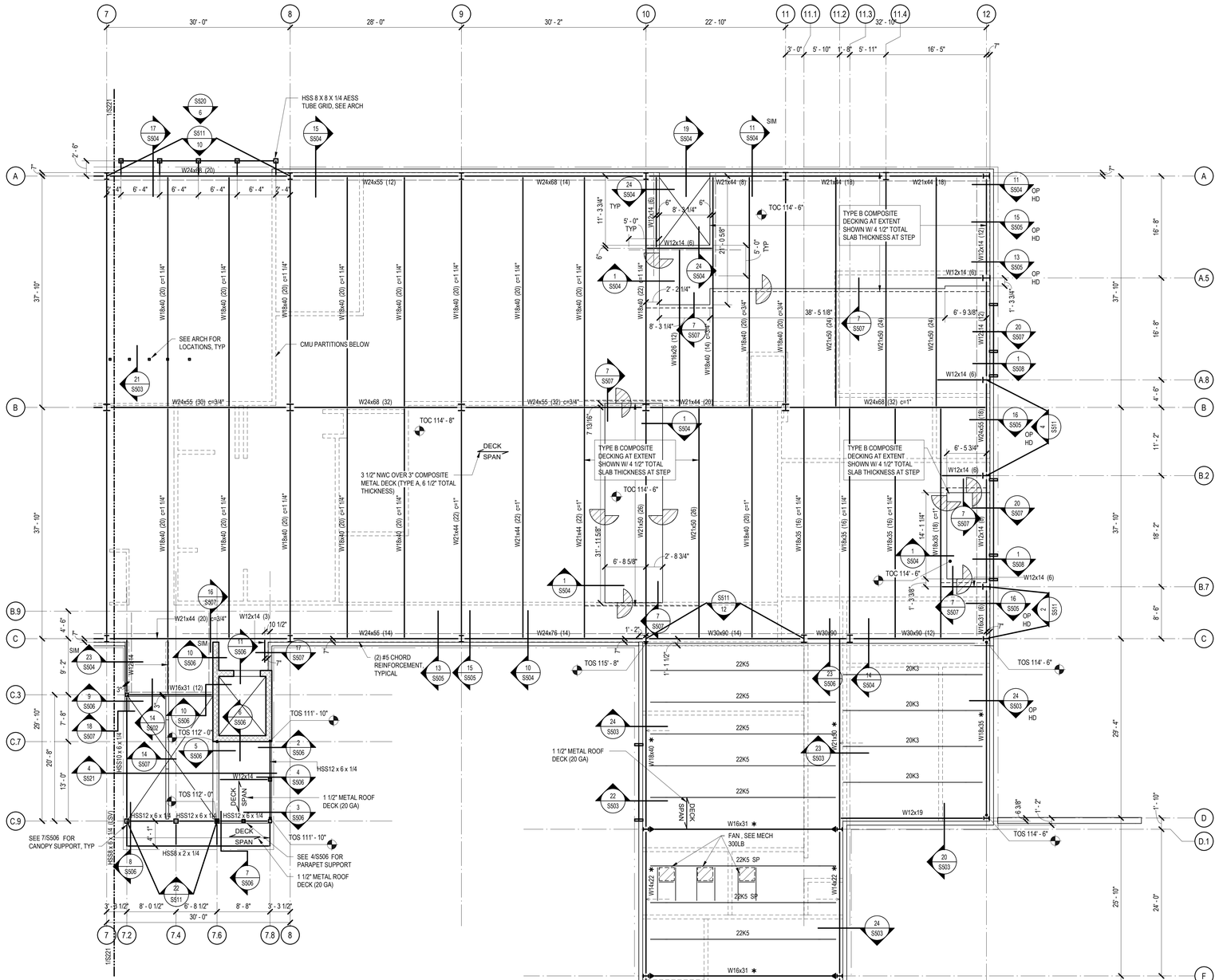

1 LEVEL 2 - FRAMING PLAN (EAST)

1/8" = 1'-0"

LEVEL 2 PLAN NOTES

1. FINISH FLOOR ELEVATION IS 114'-8" (RELATIVE TO DATUM 100'-0").
2. TOP OF CONCRETE SLAB IS FINISH FLOOR UNLESS SHOWN OTHERWISE.
3. SHEET INDEX:
   GENERAL NOTES - S101
   TYPICAL DETAILS - S301, S401, S501
   PILE SCHEDULE - S301
   STEEL COLUMN SCHEDULE - S501
   VERTICAL BRACES - S502
4. TYPICAL CONCRETE SLAB THICKNESS IS 6 1/2" (OVERALL) UNLESS NOTED OTHERWISE.
5. UNLESS SHOWN OTHERWISE, STEEL BEAMS ARE CENTERED ON AND EQUALLY SPACED BETWEEN COLUMN CENTERLINES.
6. NUMBER OF SHEAR STUDS IS NOTED IN PARENTHESES ( ) ADJACENT TO BEAM SIZES. SEE TYPICAL DETAILS FOR LAYOUT REQUIREMENTS OF STUDS.
7. INCHES OF BEAM CAMBER, WHERE REQUIRED, ARE NOTED BY "c=xx" ADJACENT TO BEAM SIZE.
8. HEAVY CONNECTIONS, WHERE REQUIRED ARE DENOTED BY "HC" ON PLAN ADJACENT TO BEAM SIZE.
9. REFER TO ARCHITECTURAL DRAWINGS FOR EXTENT OF FIRE SPRAY PROOFING AT STEEL MEMBERS

LOW ROOF PLAN NOTES

1. TOP OF ROOF STRUCTURE IS SLOPED FOR DRAINAGE. SEE ELEVATIONS NOTED ON THE PLAN. SLOPES SHALL BE UNIFORM BETWEEN COLUMN CENTERLINES UNLESS SHOWN OTHERWISE.
2. TOP OF STEEL ELEVATIONS SHOWN ON PLAN ARE BOTTOM OF DECK (TOP OF BEAM OR JOIST) ELEVATIONS, UNLESS NOTED OTHERWISE.
3. SHEET INDEX:
   GENERAL NOTES - S101
   TYPICAL DETAILS - S301, S401, S501
   STEEL COLUMN SCHEDULE - S501
   VERTICAL BRACES - S502
4. UNLESS NOTED OTHERWISE, STEEL BEAMS/JOISTS SHALL BE CENTERED ON AND EQUALLY SPACED BETWEEN COLUMN CENTERLINES.
5. SEE SHEET S103 FOR NET UPLIFT WIND LOADING FOR ROOF JOIST DESIGN.
6. —·—>— ARROW TIP DENOTES LOW END OF BOTTOM FLANGE BRACE, SEE 5/S503.
7. JOISTS SUPPORTING MECHANICAL EQUIPMENT SHALL BE DESIGNED FOR TYPICAL ROOF LOADING PLUS A CONCENTRATED LOAD OF 60% OF INDICATED EQUIPMENT WEIGHT PLACED AT ANY PANEL POINT.
8. JOISTS NOTED AS "SP" ARE SPECIAL DESIGNS TO BE PROVIDED BY SUPPLIER FOR LOADINGS INDICATED.
9. BEAMS INDICATED WITH AN "*" ASTERISK ON PLAN ADJACENT TO BEAM SIZE ARE COLLECTOR BEAMS. DESIGN COLLECTOR CONNECTIONS FOR FACTORED AXIAL LOADS INDICATED ON DETAIL .

L.A. FUESS PARTNERS, INC.
Structural Engineers
3333 Lee Parkway, Suite 900 • Dallas, TX 75219
214.871.7010 • www.lafp.com
LAFP PROJECT NO. 19100 FIRM REG. NO. F-537

BRINKLEY SARGENT WIGGINTON ARCHITECTS

Architect: Brinkley Sargent Wigginton Architects (972) 960-9970
Landscape: Kendall Landscape Architecture (214) 739-3226
Structural: L.A. Fuess Partners, Inc (214)
MEP: M-E Engineers (214) 741-1589
Civil: KSA Engineers, Inc (903) 236-7700
Technology: M-E Engineers (303) 421-6656

LONGVIEW POLICE DEPARTMENT

XXXX SOUTH ST. LONGVIEW, TEXAS 75601

History		
#	Date	Description

STATE OF TEXAS
CHRISTOPHER T. MATTHEWS
105076
LICENSED
PROFESSIONAL ENGINEER
8-19-2020

LEVEL 2 - FRAMING PLAN (EAST)

20513
08/19/2020
S222

BID ISSUE

C:\Temp\19100 - Longview Police Building-R19_jwarren2SP.rvt
8/17/2020 11:08:55 AM

Brinkley Sargent Wigginton Architects, Inc.

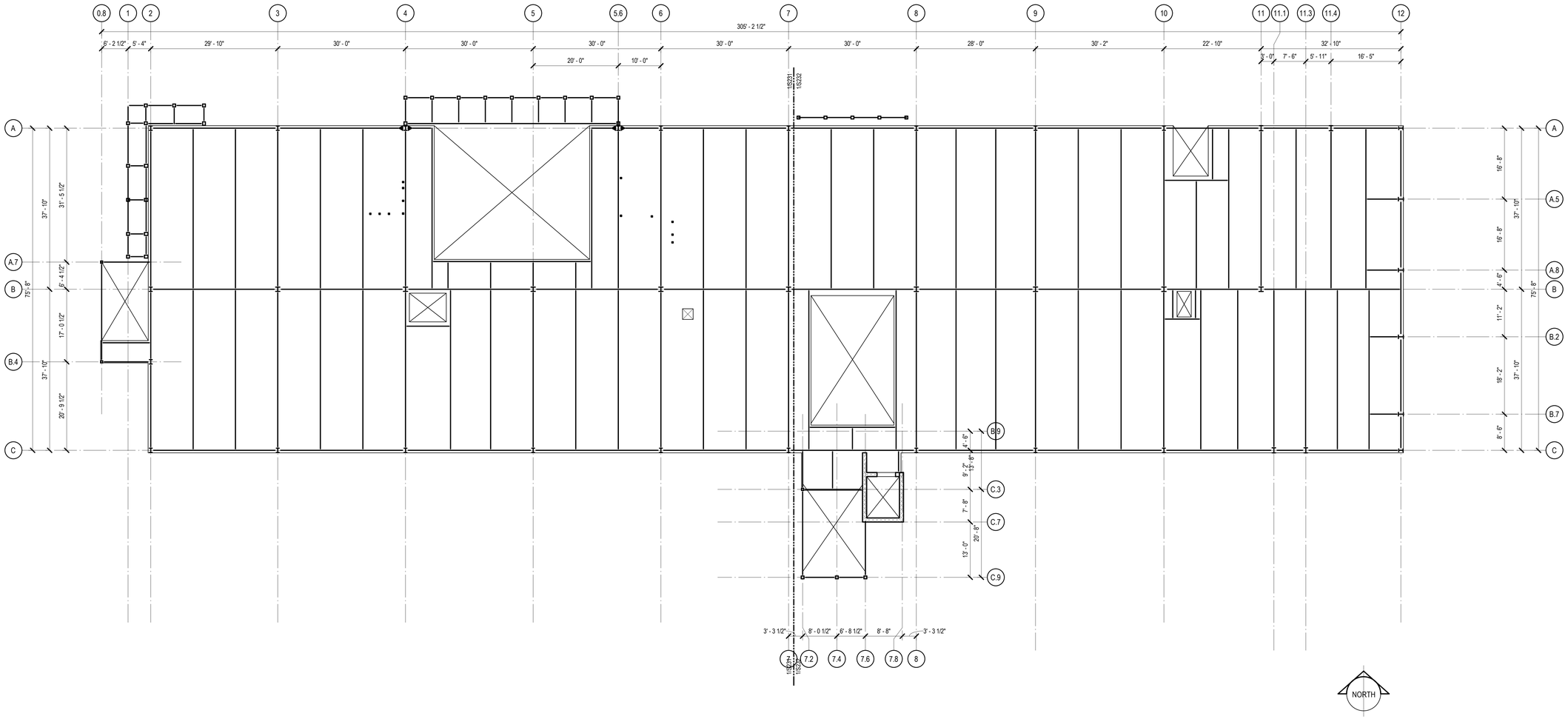

1 LEVEL 3 - OVERALL FRAMING PLAN

3/32" = 1'-0"

Architect: Brinkley Sargent Wigginton Architects (972) 960-9970
Landscape: Kendall Landscape Architecture (214) 739-3226
Structural: L.A. Fuess Partners, Inc (214)
MEP: M-E Engineers (214) 741-1589
Civil: KSA Engineers, Inc (903) 236-7700
Technology: M-E Engineers (303) 421-6656

BRINKLEY SARGENT WIGINTON ARCHITECTS

LONGVIEW POLICE DEPARTMENT

XXXX SOUTH ST. LONGVIEW, TEXAS 75601

History		
#	Date	Description

STATE OF TEXAS
CHRISTOPHER T. MATTHEWS
105076
LICENSED
PROFESSIONAL ENGINEER
8-19-2020

LEVEL 3 - OVERALL FRAMING PLAN

L.A. FUESS PARTNERS, INC.
Structural Engineers
3333 Lee Parkway, Suite 300 • Dallas, TX 75219
214.871.7010 • www.lafp.com
LAFP PROJECT NO. 19100 FIRM REG. NO. F-537

20513
08/19/2020

S230

BID ISSUE

8/17/2020 11:08:55 AM
C:\Temp\19100 - LongviewPoliceBuilding-R19_jsweinel2019.rvt

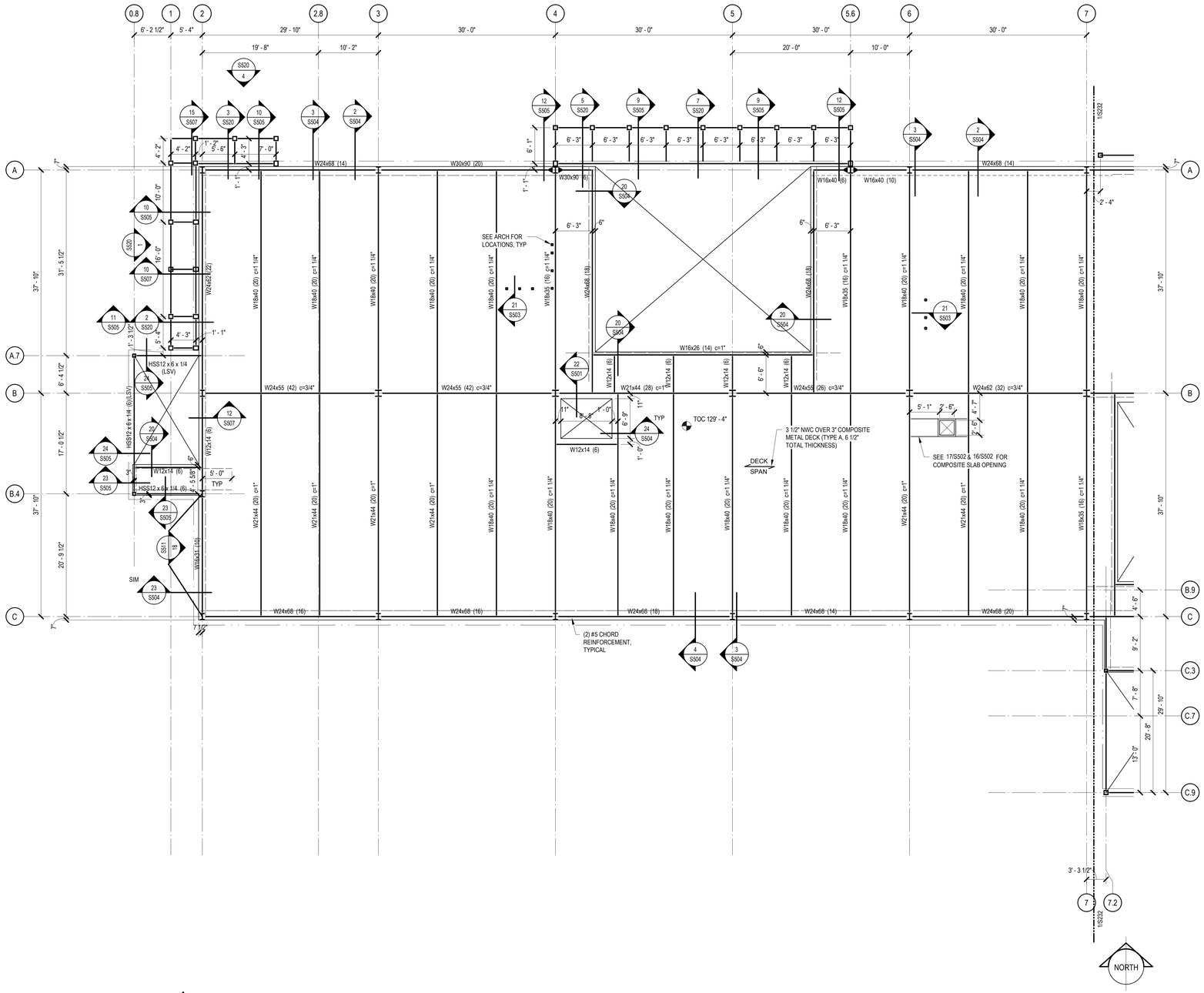

1 LEVEL 3 - FRAMING PLAN (WEST)

1/8" = 1'-0"

LEVEL 3 PLAN NOTES

1. FINISH FLOOR ELEVATION IS 129'-4" (RELATIVE TO DATUM 100'-0").
2. TOP OF CONCRETE SLAB IS FINISH FLOOR UNLESS SHOWN OTHERWISE.
3. SHEET INDEX:
   - GENERAL NOTES - S101
   - TYPICAL DETAILS - S301, S401, S501
   - PILE SCHEDULE - S301
   - STEEL COLUMN SCHEDULE - S501
   - VERTICAL BRACES - S502
4. TYPICAL CONCRETE SLAB THICKNESS IS 6 1/2" (OVERALL) UNLESS NOTED OTHERWISE.
5. UNLESS SHOWN OTHERWISE, STEEL BEAMS ARE CENTERED ON AND EQUALLY SPACED BETWEEN COLUMN CENTERLINES.
6. NUMBER OF SHEAR STUDS IS NOTED IN PARENTHESES ( ) ADJACENT TO BEAM SIZES. SEE TYPICAL DETAILS FOR LAYOUT REQUIREMENTS OF STUDS.
7. INCHES OF BEAM CAMBER, WHERE REQUIRED, ARE NOTED BY "c=xx" ADJACENT TO BEAM SIZE.

BRINKLEY SARGENT WIGGINTON ARCHITECTS

Architect: Brinkley Sargent Wigginton Architects (972) 960-9970
Landscape: Kendall Landscape Architecture (214) 739-3226
Structural: L.A. Fuess Partners, Inc (214)
MEP: M-E Engineers (214) 741-1589
Civil: KSA Engineers, Inc (903) 236-7700
Technology: M-E Engineers (303) 421-6656

LONGVIEW POLICE DEPARTMENT

XXXX SOUTH ST. LONGVIEW, TEXAS 75601

History		
#	Date	Description

STATE OF TEXAS
CHRISTOPHER T. MATTHEWS
105076
LICENSED
PROFESSIONAL ENGINEER
8-19-2020

LEVEL 3 - FRAMING PLAN (WEST)

BID ISSUE

L.A. FUESS PARTNERS, INC.
Structural Engineers
3333 Lee Parkway, Suite 300 • Dallas, TX 75219
214.871.7010 • www.lafp.com
LAFP PROJECT NO. 19100 FIRM REG. NO. F-537

20513
08/19/2020
S231

C:\Temp\19100 - LongviewPoliceBuilding-R19_jsweirich2019.rvt
8/17/2020 11:08:55 AM

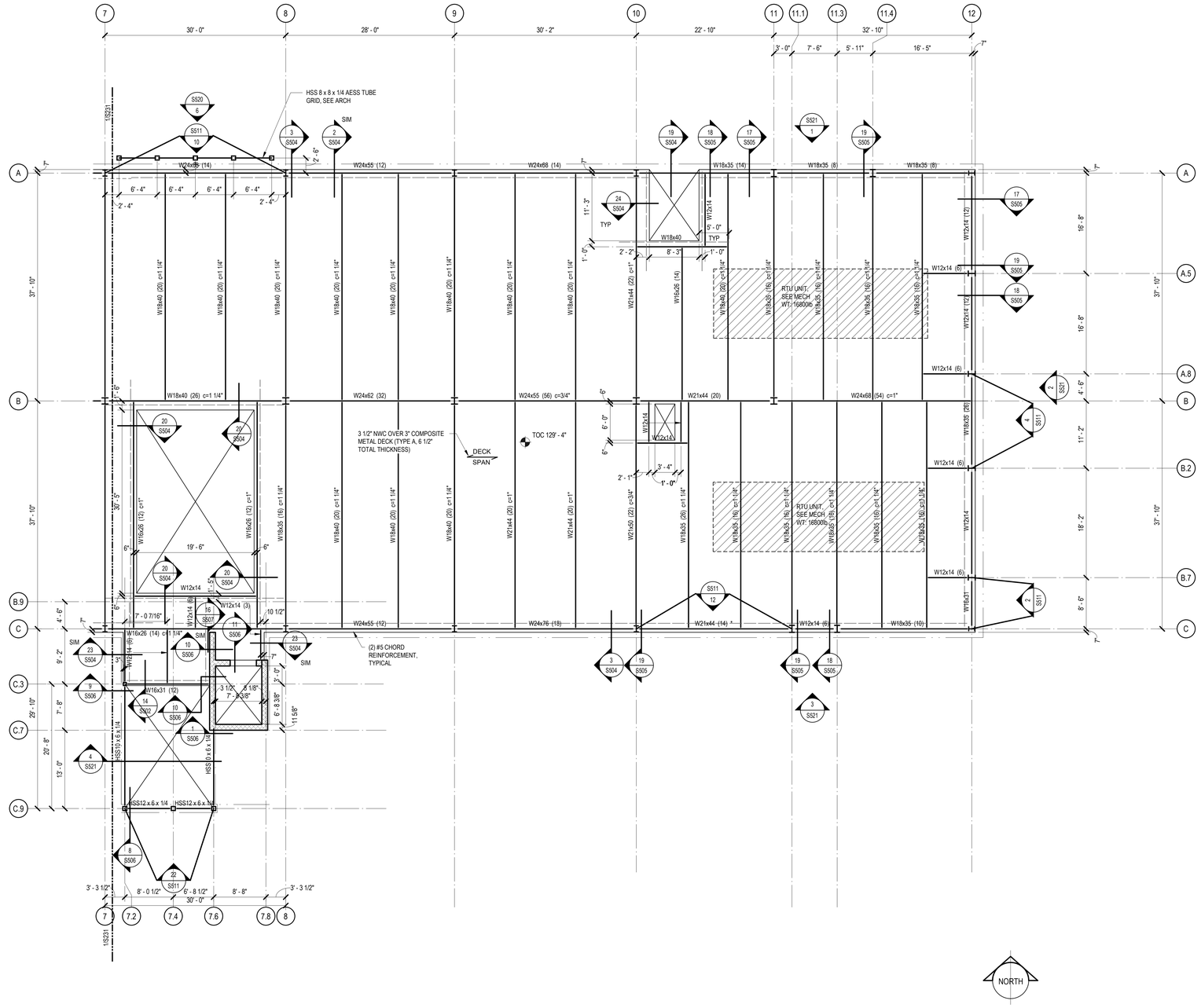

1 LEVEL 3 - FRAMING PLAN (EAST)

1/8" = 1'-0"

LEVEL 3 PLAN NOTES

1. FINISH FLOOR ELEVATION IS 129'-4" (RELATIVE TO DATUM 100'-0").
2. TOP OF CONCRETE SLAB IS FINISH FLOOR UNLESS SHOWN OTHERWISE.
3. SHEET INDEX:
   - GENERAL NOTES - S101
   - TYPICAL DETAILS - S301, S401, S501
   - PILE SCHEDULE - S301
   - STEEL COLUMN SCHEDULE - S501
   - VERTICAL BRACES - S502
4. TYPICAL CONCRETE SLAB THICKNESS IS 6 1/2" (OVERALL) UNLESS NOTED OTHERWISE.
5. UNLESS SHOWN OTHERWISE, STEEL BEAMS ARE CENTERED ON AND EQUALLY SPACED BETWEEN COLUMN CENTERLINES.
6. NUMBER OF SHEAR STUDS IS NOTED IN PARENTHESES ( ) ADJACENT TO BEAM SIZES. SEE TYPICAL DETAILS FOR LAYOUT REQUIREMENTS OF STUDS.
7. INCHES OF BEAM CAMBER, WHERE REQUIRED, ARE NOTED BY "c=xx" ADJACENT TO BEAM SIZE.

Architect: Brinkley Sargent Wigginton Architects (972) 960-9970
Landscape: Kendall Landscape Architecture (214) 739-3226
Structural: L.A. Fuess Partners, Inc (214)
MEP: M-E Engineers (214) 741-1589
Civil: KSA Engineers, Inc (903) 236-7700
Technology: M-E Engineers (303) 421-6656

BRINKLEY SARGENT WIGINTON ARCHITECTS

LONGVIEW POLICE DEPARTMENT

XXXX SOUTH ST. LONGVIEW, TEXAS 75601

History		
#	Date	Description

STATE OF TEXAS
CHRISTOPHER T. MATTHEWS
105076
LICENSED PROFESSIONAL ENGINEER
8-19-2020

LEVEL 3 - FRAMING PLAN (EAST)

BID ISSUE

L.A. FUESS PARTNERS, INC.
Structural Engineers
3333 Lee Parkway, Suite 300 • Dallas, TX 75219
214.871.7010 • www.lafp.com
LAFP PROJECT NO. 19100 FIRM REG. NO. F-537

20513
08/19/2020
S232

8/17/2020 11:08:57 AM
C:\temp\19100 - Longview\Building-M19_revitsd3R.rvt

Brinkley Sargent Wigginton Architects, Inc.

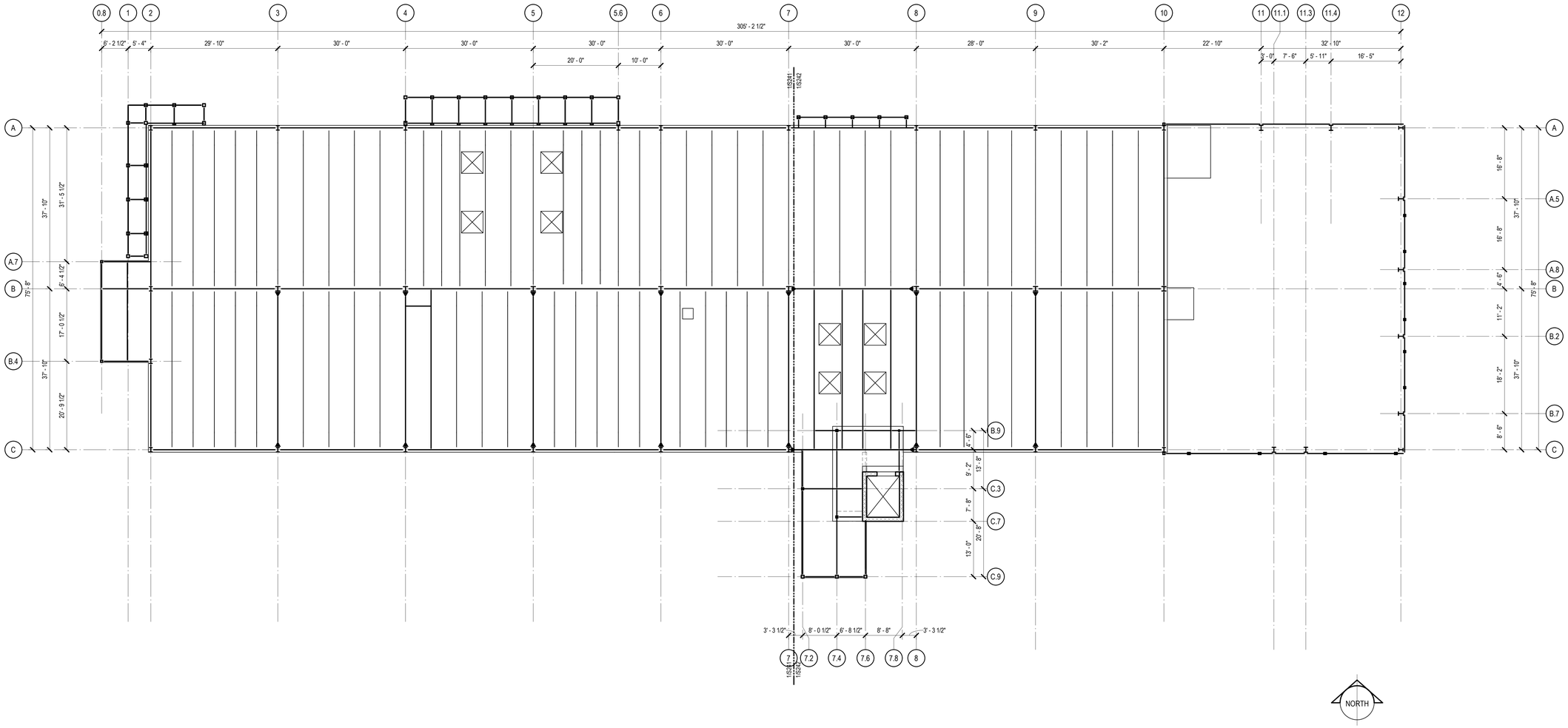

1 LEVEL ROOF - OVERALL FRAMING PLAN

3/32" = 1'-0"

Architect: Brinkley Sargent Wigginton Architects (972) 960-9970
Landscape: Kendall Landscape Architecture (214) 739-3226
Structural: L.A. Fuess Partners, Inc (214)
MEP: M-E Engineers (214) 741-1589
Civil: KSA Engineers, Inc (903) 236-7700
Technology: M-E Engineers (303) 421-6656

BRINKLEY SARGENT WIGINTON ARCHITECTS

LONGVIEW POLICE DEPARTMENT

XXXX SOUTH ST. LONGVIEW, TEXAS 75601

History

#	Date	Description

STATE OF TEXAS
CHRISTOPHER T. MATTHEWS
105076
LICENSED
PROFESSIONAL ENGINEER
8-19-2020

LEVEL ROOF - OVERALL FRAMING PLAN

L.A. FUESS PARTNERS, INC.
Structural Engineers
3333 Lee Parkway, Suite 300 • Dallas, TX 75219
214.871.7010 • www.lafp.com
LAFP PROJECT NO. 19100 FIRM REG. NO. F-537

20513
08/19/2020

S240

BID ISSUE

C:\Temp\19100 - LongviewPoliceBuilding-R19_jsweinstein5910.rvt
8/17/2020 11:08:58 AM

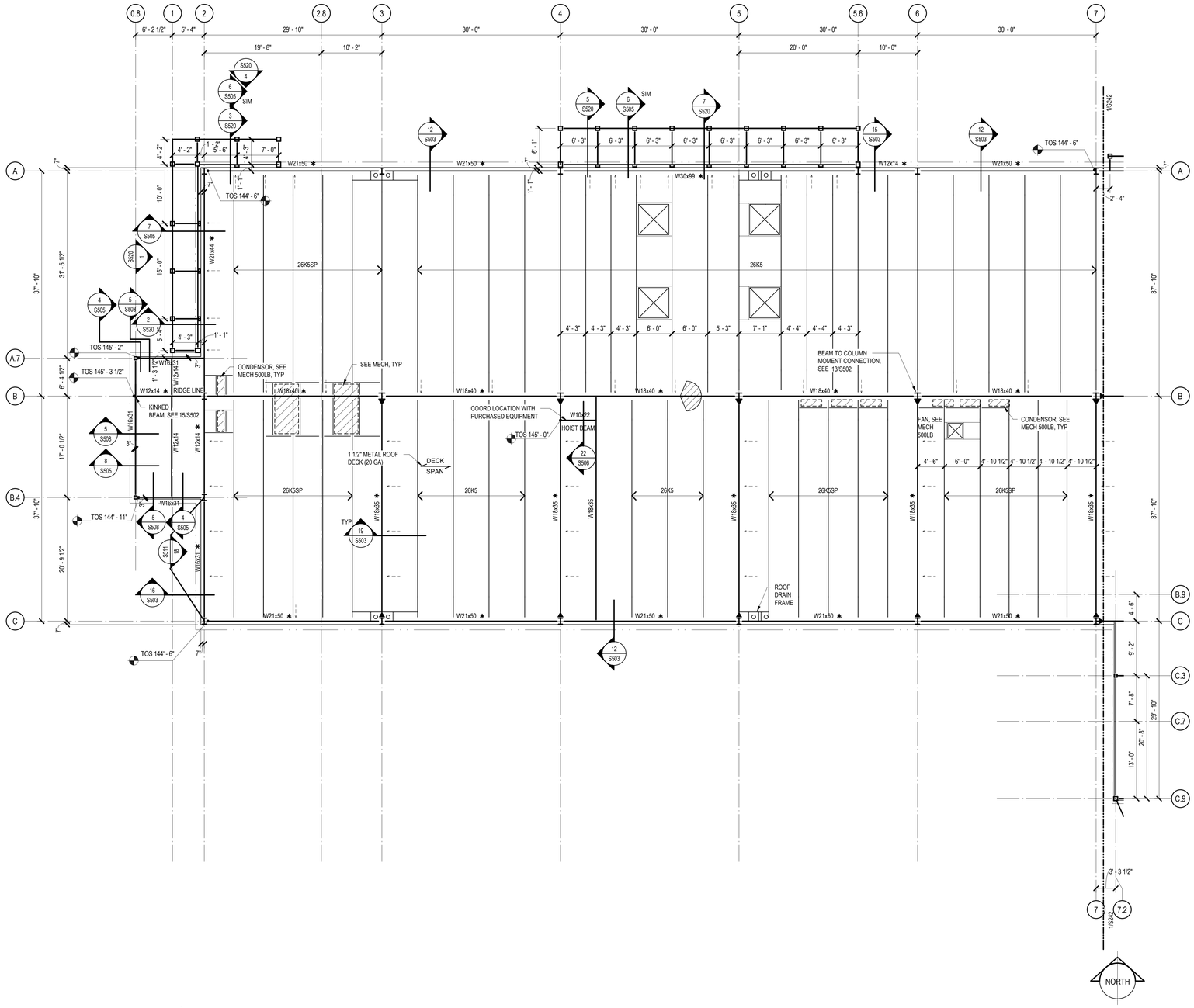

1 LEVEL ROOF - FRAMING PLAN (WEST)

1/8" = 1'-0"

ROOF PLAN NOTES

1. TOP OF ROOF STRUCTURE IS SLOPED FOR DRAINAGE. SEE ELEVATIONS NOTED ON THE PLAN. SLOPES SHALL BE UNIFORM BETWEEN COLUMN CENTERLINES UNLESS SHOWN OTHERWISE.
2. TOP OF STEEL ELEVATIONS SHOWN ON PLAN ARE BOTTOM OF DECK (TOP OF BEAM OR JOIST) ELEVATIONS, UNLESS NOTED OTHERWISE.
3. SHEET INDEX:
   GENERAL NOTES - S101
   TYPICAL DETAILS - S301, S401, S501
   STEEL COLUMN SCHEDULE - S501
   VERTICAL BRACES - S502
4. UNLESS NOTED OTHERWISE, STEEL BEAMS/JOISTS SHALL BE CENTERED ON AND EQUALLY SPACED BETWEEN COLUMN CENTERLINES.
5. SEE SHEET S103 FOR NET UPLIFT WIND LOADING FOR ROOF JOIST DESIGN.
6. —→○= ARROW TIP DENOTES LOW END OF BOTTOM FLANGE BRACE, SEE 5/S503.
7. JOISTS SUPPORTING MECHANICAL EQUIPMENT SHALL BE DESIGNED FOR TYPICAL ROOF LOADING PLUS A CONCENTRATED LOAD OF 60% OF INDICATED EQUIPMENT WEIGHT PLACED AT ANY PANEL POINT.
8. JOISTS NOTED AS "SP" ARE SPECIAL DESIGNS TO BE PROVIDED BY SUPPLIER FOR LOADINGS INDICATED.
9. BEAMS INDICATED WITH AN "*" ASTERISK ON PLAN ADJACENT TO BEAM SIZE ARE COLLECTOR BEAMS. DESIGN COLLECTOR CONNECTIONS FOR FACTORED AXIAL LOADS INDICATED ON DETAIL .

L.A. FUESS PARTNERS, INC.
Structural Engineers
3333 Lee Parkway, Suite 300 • Dallas, TX 75219
214.871.7010 • www.lafp.com
LAFP PROJECT NO. 19100 FIRM REG. NO. F-537

BRINKLEY SARGENT WIGINTON ARCHITECTS

Architect: Brinkley Sargent Wigginton Architects (972) 960-9970
Landscape: Kendall Landscape Architecture (214) 739-3226
Structural: L.A. Fuess Partners, Inc (214)
MEP: M-E Engineers (214) 741-1589
Civil: KSA Engineers, Inc (903) 236-7700
Technology: M-E Engineers (303) 421-6656

LONGVIEW POLICE DEPARTMENT

XXXX SOUTH ST. LONGVIEW, TEXAS 75601

History		
#	Date	Description

STATE OF TEXAS
CHRISTOPHER T. MATTHEWS
105076
LICENSED
PROFESSIONAL ENGINEER
8-19-2020

LEVEL ROOF - FRAMING PLAN (WEST)

20513
08/19/2020
S241

BID ISSUE

C:\Temp\19100 - LongviewPoliceBuilding-R19_jsaurman5293.rvt
8/17/2020 11:08:59 AM

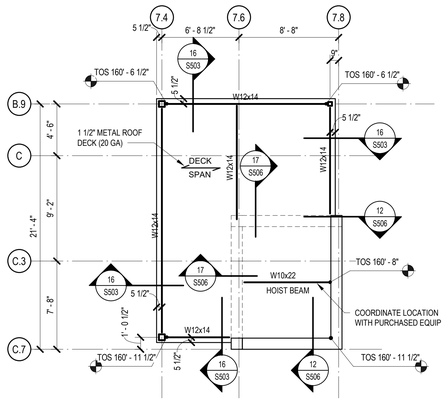

2 LEVEL PENTHOUSE ROOF - FRAMING PLAN

3/16" = 1'-0"

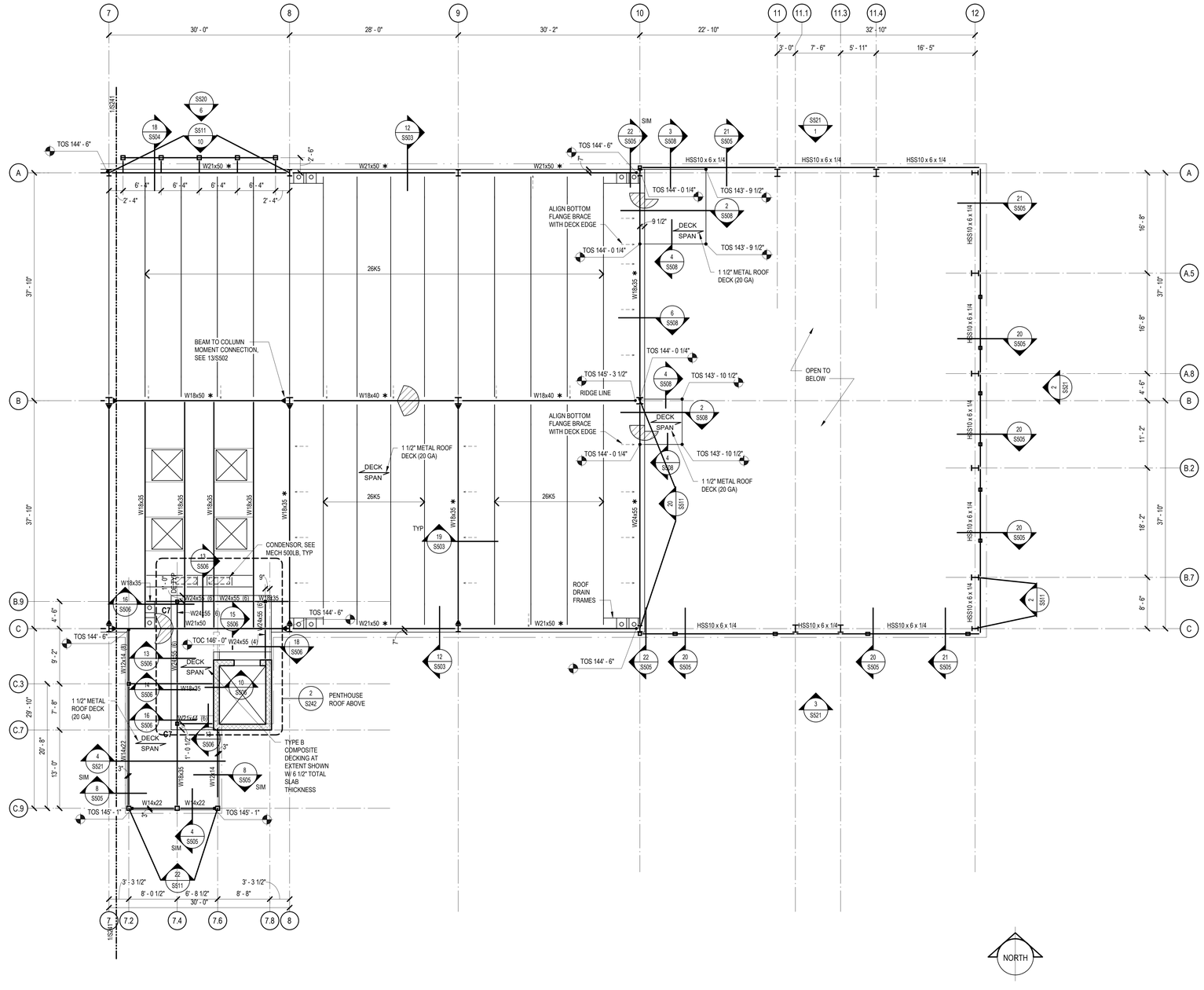

1 LEVEL ROOF - FRAMING PLAN (EAST)

1/8" = 1'-0"

ROOF PLAN NOTES

1. TOP OF ROOF STRUCTURE IS SLOPED FOR DRAINAGE. SEE ELEVATIONS NOTED ON THE PLAN. SLOPES SHALL BE UNIFORM BETWEEN COLUMN CENTERLINES UNLESS SHOWN OTHERWISE.
2. TOP OF STEEL ELEVATIONS SHOWN ON PLAN ARE BOTTOM OF DECK (TOP OF BEAM OR JOIST) ELEVATIONS, UNLESS NOTED OTHERWISE.
3. SHEET INDEX:
   GENERAL NOTES - S101
   TYPICAL DETAILS - S301, S401, S501
   STEEL COLUMN SCHEDULE - S501
   VERTICAL BRACES - S502
4. UNLESS NOTED OTHERWISE, STEEL BEAMS/JOISTS SHALL BE CENTERED ON AND EQUALLY SPACED BETWEEN COLUMN CENTERLINES.
5. SEE SHEET S103 FOR NET UPLIFT WIND LOADING FOR ROOF JOIST DESIGN.
6. ——▷= ARROW TIP DENOTES LOW END OF BOTTOM FLANGE BRACE, SEE 5/S503.
7. JOISTS SUPPORTING MECHANICAL EQUIPMENT SHALL BE DESIGNED FOR TYPICAL ROOF LOADING PLUS A CONCENTRATED LOAD OF 60% OF INDICATED EQUIPMENT WEIGHT PLACED AT ANY PANEL POINT.
8. JOISTS NOTED AS "SP" ARE SPECIAL DESIGNS TO BE PROVIDED BY SUPPLIER FOR LOADINGS INDICATED.
9. BEAMS INDICATED WITH AN "*" ASTERISK ON PLAN ADJACENT TO BEAM SIZE ARE COLLECTOR BEAMS. DESIGN COLLECTOR CONNECTIONS FOR FACTORED AXIAL LOADS INDICATED ON DETAIL .

L.A. FUESS PARTNERS, INC.
Structural Engineers
3333 Lee Parkway, Suite 300 • Dallas, TX 75219
214.871.7010 • www.lafp.com
LAFP PROJECT NO. 19100 FIRM REG. NO. F-537

BRINKLEY SARGENT WIGINTON ARCHITECTS

Architect: Brinkley Sargent Wigginton Architects (972) 960-9970
Landscape: Kendall Landscape Architecture (214) 739-3226
Structural: L.A. Fuess Partners, Inc (214)
MEP: M-E Engineers (214) 741-1589
Civil: KSA Engineers, Inc (903) 236-7700
Technology: M-E Engineers (303) 421-6656

LONGVIEW POLICE DEPARTMENT

XXXX SOUTH ST. LONGVIEW, TEXAS 75601

History		
#	Date	Description

STATE OF TEXAS
CHRISTOPHER T. MATTHEWS
105076
LICENSED
PROFESSIONAL ENGINEER
8-19-2020

LEVEL ROOF - FRAMING PLAN (EAST)

20513
08/19/2020
S242

BID ISSUE

C:\Temp\19100 - Longview Police Building-R19_jeremias2SF.rvt
8/17/2020 11:09:00 AM

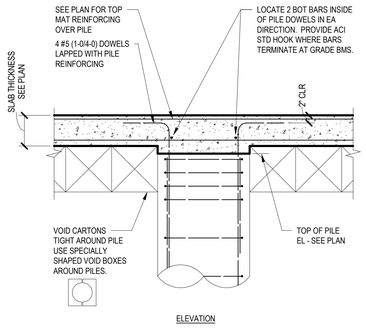

17 GROUND FLOOR TOP OF PILE TYPICAL DETAIL

NO SCALE TD02167

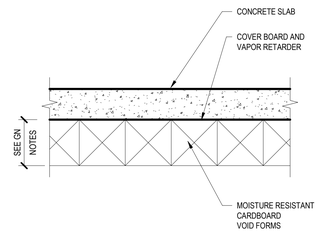

13 VOID BOX - SLAB TYPICAL DETAIL

NO SCALE TD1

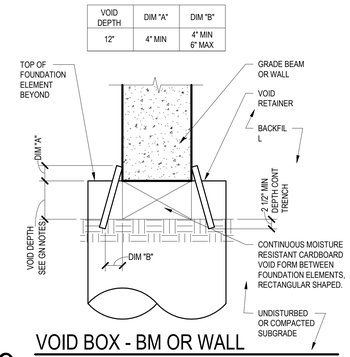

9 VOID BOX - BM OR WALL TYPICAL DETAIL

NO SCALE TD3

DOWEL BENDING DIAGRAM

TD03680

LEGEND: D1 @ 18 — SPACING IN INCHES; BAR MARK

MARK	BAR SIZE	A	B	C
D1	#4	0-8	2-6	0
D2	#4	0	4-0	0
D3	#4	3-0	3-0	0
D4	#4	1-6	2-6	0
D5	#3	0-6	2-6	0
D6				
D7				
D8				
D9				

AUGER CAST-IN-PLACE PILE SCHEDULE

PILE MARK	SHAFT DIAMETER	VERTICAL REINF	PENETRATION
P1	24"	6 #8	25' - 0"
P2	24"	6 #8	30' - 0"
P3	24"	8 #8	30' - 0"
P4	24"	8 #8	32' - 0"

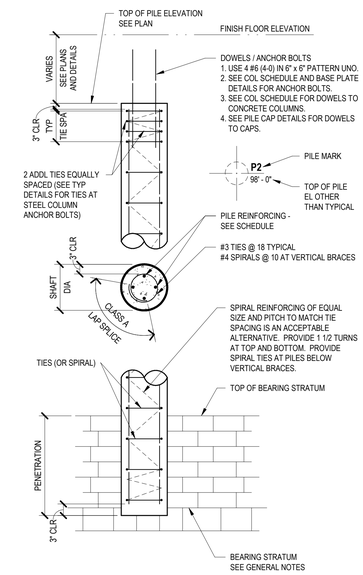

2 AUGER CAST PILE TYPICAL DETAIL

NO SCALE TD74

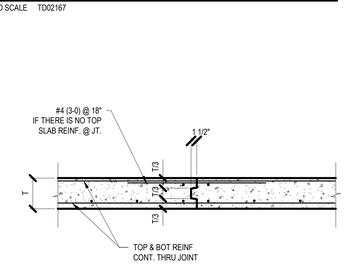

18 STRUCT. SLAB CONSTR. JOINT TYPICAL DETAIL

NO SCALE TD03342

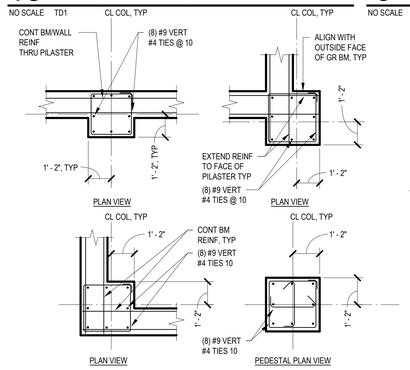

14 PILASTER & PEDESTAL REINF. TYPICAL DETAIL

NO SCALE TD03150

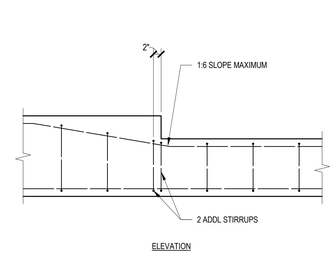

10 DROP IN GRADE BEAM TYPICAL DETAIL

NO SCALE TD8

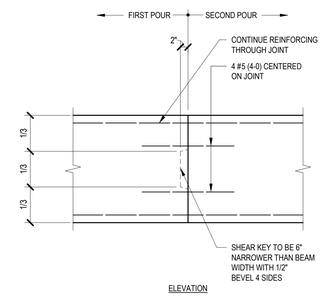

6 GRADE BM CONSTRUCTION JOINT TYPICAL DETAIL

NO SCALE TD6

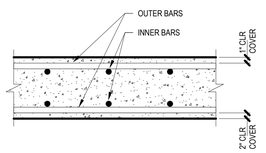

19 FLAT SLAB BAR PLACEMENT TYPICAL DETAIL

NO SCALE FLAT SLAB BAR PLACEMENT

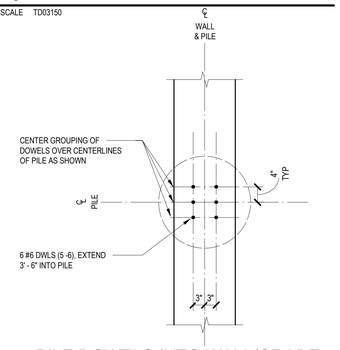

15 PILE DOWELS INTO WALL/GRADE BEAM TYPICAL DETAIL

NO SCALE PILE DWLS INTO WALL ABOVE

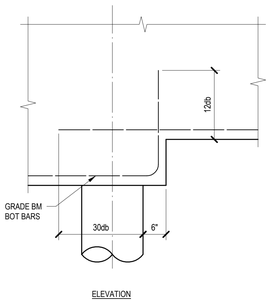

11 STEP IN GRADE BEAM TYPICAL DETAIL

NO SCALE TD5

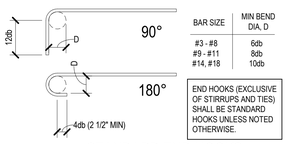

BAR SIZE	MIN BEND DIA, D
#3 - #8	6db
#9 - #11	8db
#14, #18	10db

END HOOKS (EXCLUSIVE OF STIRRUPS AND TIES) SHALL BE STANDARD HOOKS UNLESS NOTED OTHERWISE.

STANDARD END HOOKS

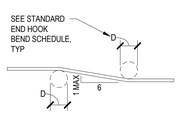

OFFSET BARS

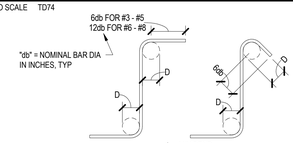

BAR SIZE	MIN BEND DIA, D
#3 - #5	4db
#6 - #8	6db

STIRRUPS AND TIES

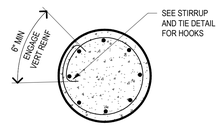

ROUND STIRRUPS AND TIES

7 REBAR BENDS AND HOOKS TYPICAL DETAIL

NO SCALE TD9

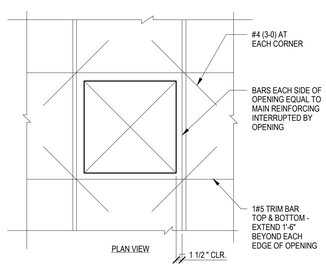

20 SLAB OPENING TYPICAL DETAIL

NO SCALE TD03343

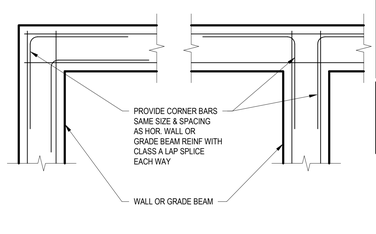

16 CORNER BARS TYPICAL DETAIL

NO SCALE TD4

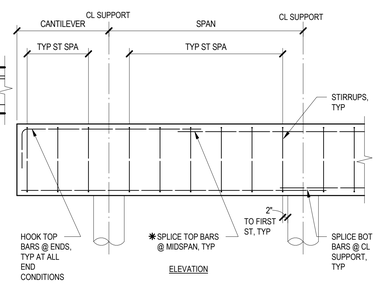

✱ TOP BARS CONT AT CANTILEVERS, CANTILEVER BACKSPANS AND SPANS LESS THAN 10' - 0".

12 TYP GRADE BEAM REINF TYPICAL DETAIL

NO SCALE TD03141

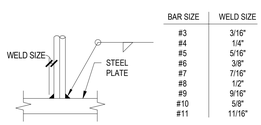

BAR SIZE	WELD SIZE
#3	3/16"
#4	1/4"
#5	5/16"
#6	3/8"
#7	7/16"
#8	1/2"
#9	9/16"
#10	5/8"
#11	11/16"

BAR PERPENDICULAR TO PLATE

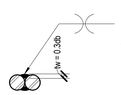

BAR SIZE	MINIMUM SPLICE LENGTH
#3	1"
#4	1 1/4"
#5	1 1/2"
#6	1 3/4"
#7	2"
#8	2 1/4"
#9	2 1/2"
#10	3"
#11	3 1/4"

BAR SPLICE

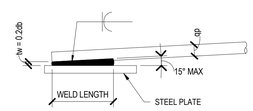

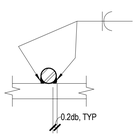

BAR SIZE	WELD LENGTH
#3	1 1/4"
#4	1 3/4"
#5	2 1/4"
#6	2 3/4"
#7	3 3/4"
#8	5"
#9	6 1/4"
#10	8"
#11	9 3/4"

BAR PARALLEL TO PLATE

8 REBAR WELDING TYPICAL DETAIL

NO SCALE TD11

L.A. FUESS PARTNERS, INC.
Structural Engineers
3333 Lee Parkway, Suite 300 • Dallas, TX 75219
214.871.7010 • www.lafp.com
LAFP PROJECT NO. 19100 FIRM REG. NO. F-537

Architect: Brinkley Sargent Wigginton Architects (972) 960-9970
Landscape: Kendall Landscape Architecture (214) 739-3226
Structural: L.A. Fuess Partners, Inc (214)
MEP: M-E Engineers (214) 741-1589
Civil: KSA Engineers, Inc (903) 236-7700
Technology: M-E Engineers (303) 421-6656

BRINKLEY SARGENT WIGGINTON ARCHITECTS

LONGVIEW POLICE DEPARTMENT

XXXX SOUTH ST. LONGVIEW, TEXAS 75601

History

#	Date	Description

STATE OF TEXAS
CHRISTOPHER T. MATTHEWS
105076
LICENSED
PROFESSIONAL ENGINEER
8-19-2020

TYPICAL CONCRETE DETAILS

20513
08/19/2020
S301

BID ISSUE

8/17/2020 11:09:01 AM

C:\Temp\19100 - LongviewPoliceBuilding-R19_jwesnak2EP.rvt

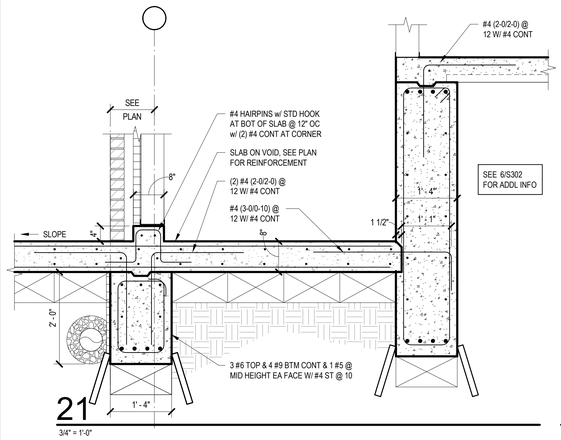

21
3/4" = 1'-0"

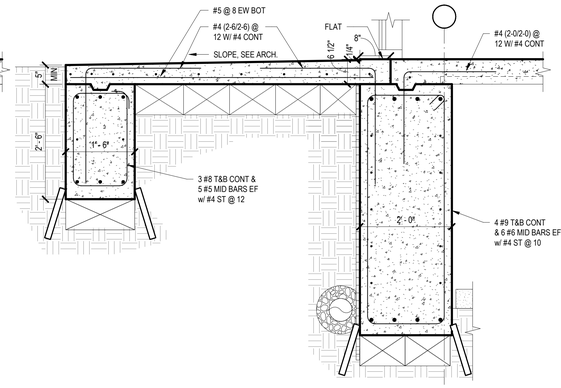

17
3/4" = 1'-0"

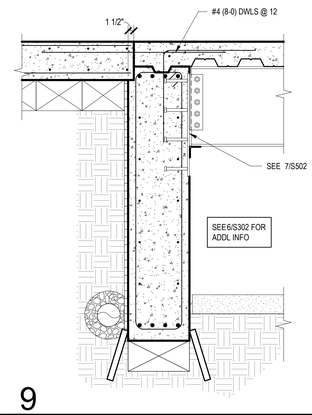

9
3/4" = 1'-0"

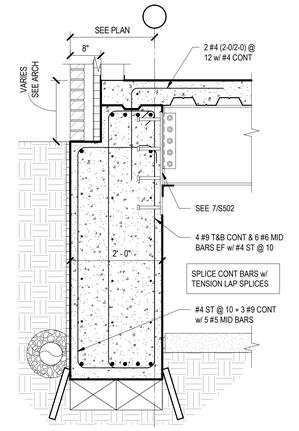

5
3/4" = 1'-0"

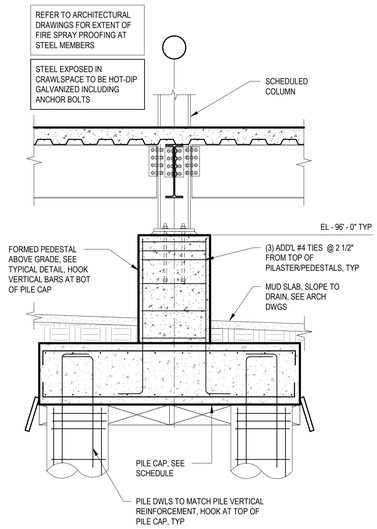

1
1/2" = 1'-0"

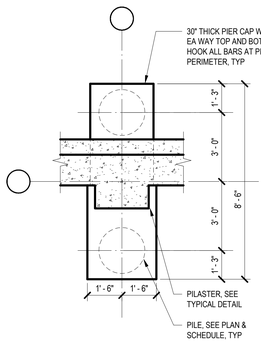

PC1

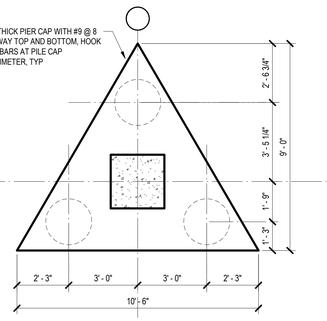

PC2

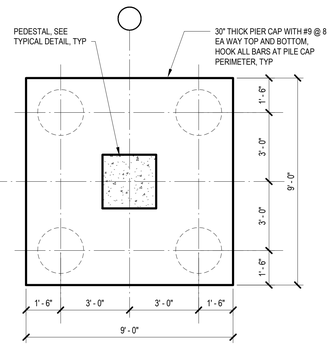

PC3

22
3/8" = 1'-0"

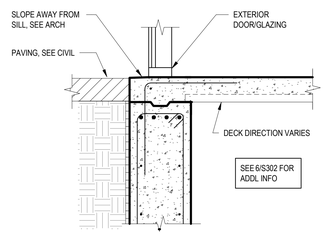

10
3/4" = 1'-0"

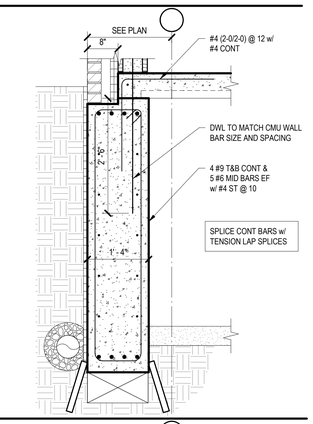

6
3/4" = 1'-0"

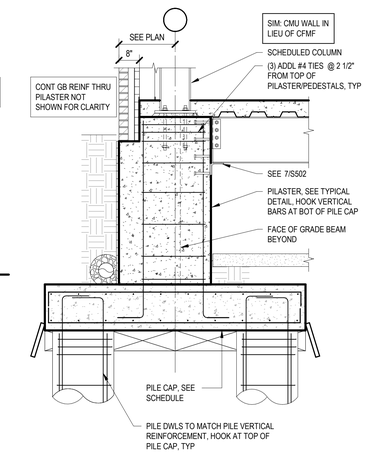

3
1/2" = 1'-0"

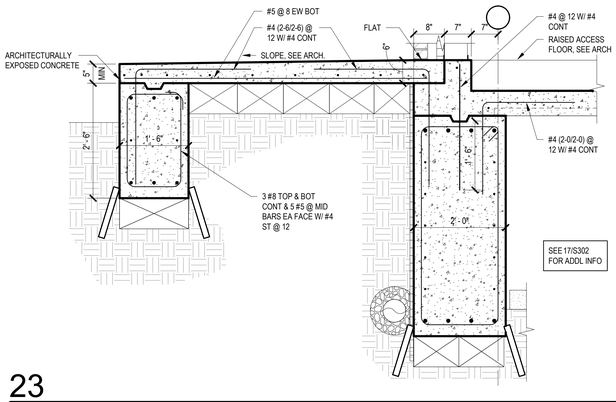

23
3/4" = 1'-0"

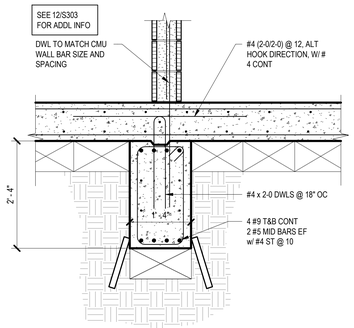

15
3/4" = 1'-0"

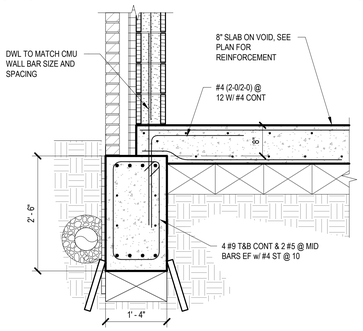

11
3/4" = 1'-0"

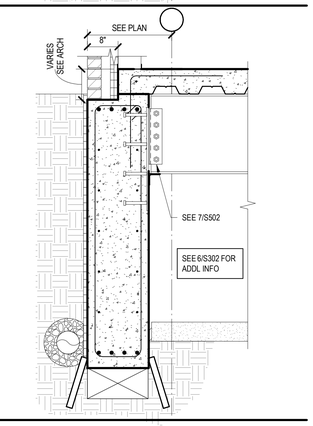

7
3/4" = 1'-0"

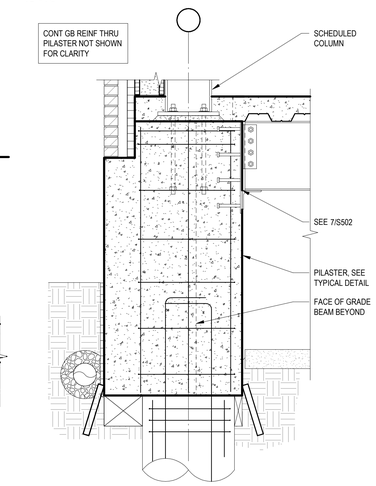

4
3/4" = 1'-0"

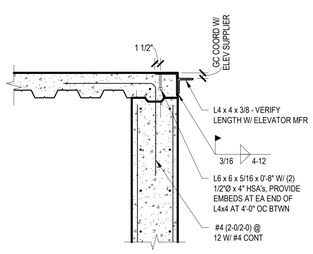

24 ELEVATOR SILL ANGLE TYPICAL DETAIL
NO SCALE TD14

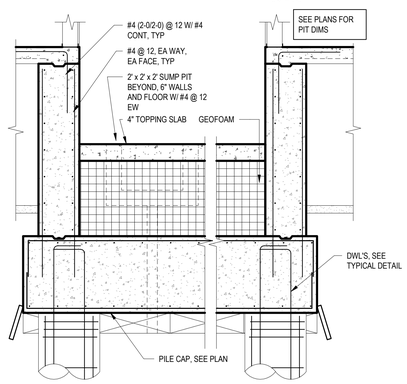

20
1/2" = 1'-0"

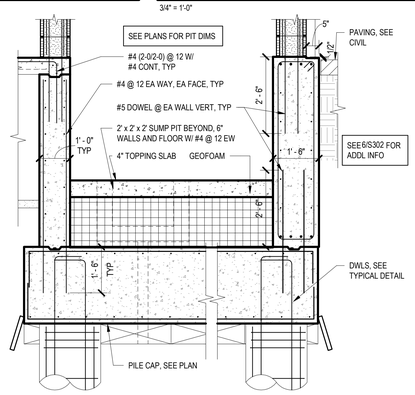

12
1/2" = 1'-0"

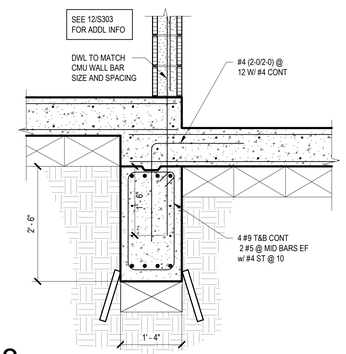

8
3/4" = 1'-0"

LONGVIEW POLICE DEPARTMENT

XXXX SOUTH ST. LONGVIEW, TEXAS 75601

Architect: Brinkley Sargent Wigginton Architects (972) 960-9970
Landscape: Kendall Landscape Architecture (214) 739-3226
Structural: L.A. Fuess Partners, Inc (214)
MEP: M-E Engineers (214) 741-1589
Civil: KSA Engineers, Inc (903) 236-7700
Technology: M-E Engineers (303) 421-6656

BRINKLEY SARGENT WIGINTON ARCHITECTS

History

#	Date	Description

STATE OF TEXAS
CHRISTOPHER T. MATTHEWS
105076
LICENSED PROFESSIONAL ENGINEER
8-19-2020

CONCRETE DETAILS

BID ISSUE

L.A. FUESS PARTNERS, INC.
Structural Engineers
3333 Lee Parkway, Suite 300 • Dallas, TX 75219
214.871.7030 • www.lafp.com
LAFP PROJECT NO. 19100 FIRM REG. NO. F-537

20513
08/19/2020
S302

C:\temp\19100 - Longview Police Building_R19_jsaucedo2019.rvt
8/17/2020 11:09:02 AM

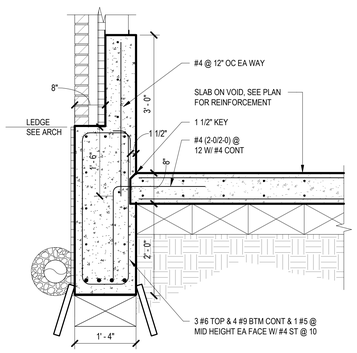

21
3/4" = 1'-0"

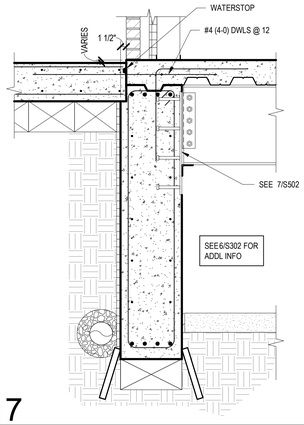

17
3/4" = 1'-0"

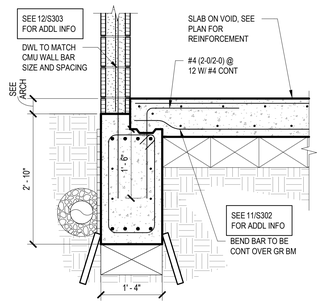

13
3/4" = 1'-0"

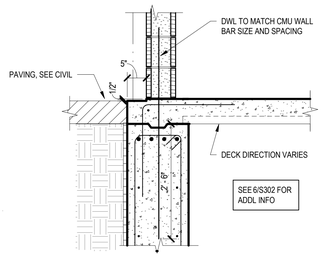

9
3/4" = 1'-0"

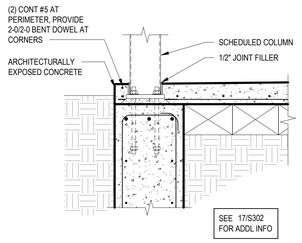

5
3/4" = 1'-0"

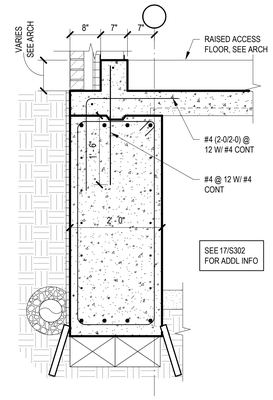

1
3/4" = 1'-0"

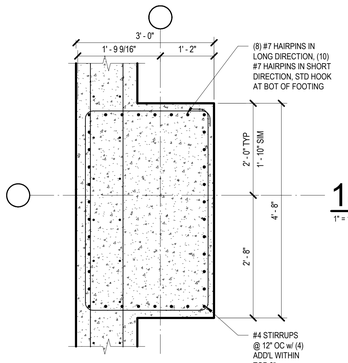

SECTION

18
1" = 1'-0"

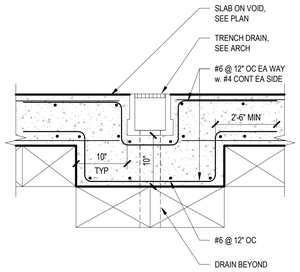

14
3/4" = 1'-0"

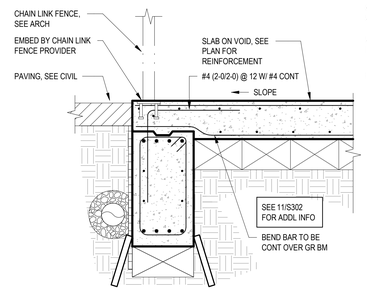

10
3/4" = 1'-0"

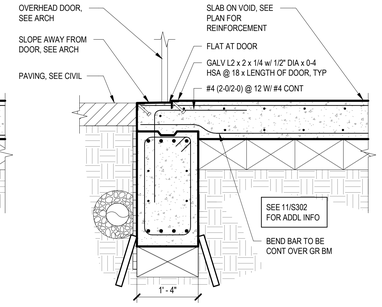

6
3/4" = 1'-0"

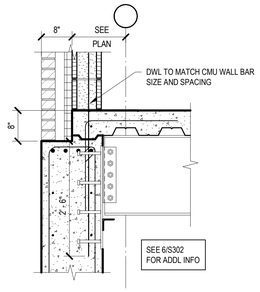

2
1/2" = 1'-0"

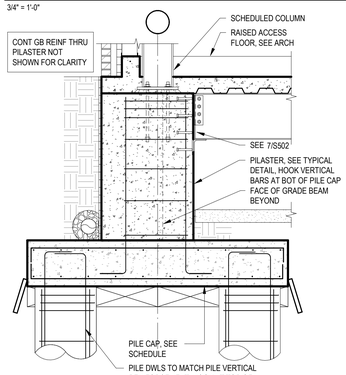

15
3/4" = 1'-0"

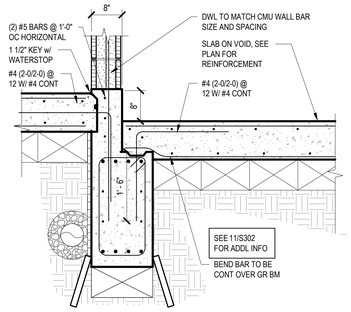

11
3/4" = 1'-0"

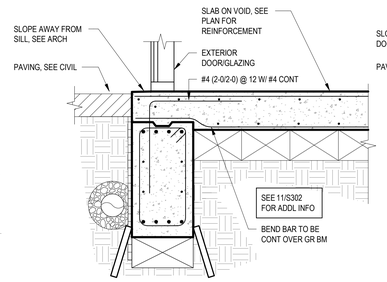

7
3/4" = 1'-0"

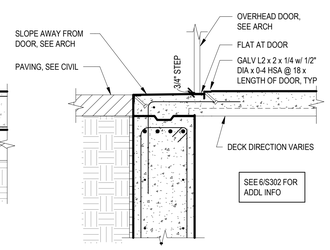

3
3/4" = 1'-0"

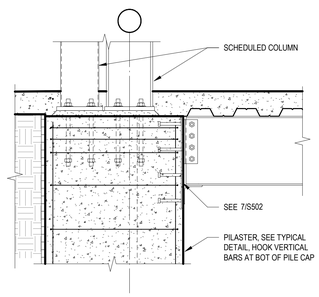

24
3/4" = 1'-0"

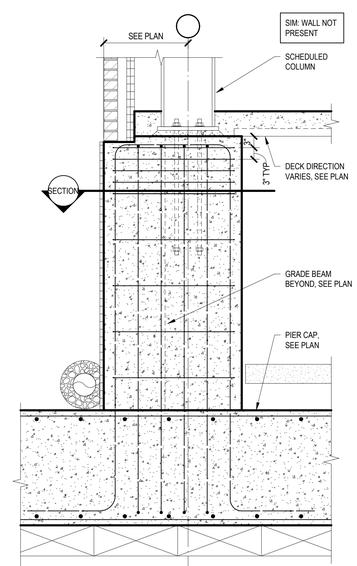

20
3/4" = 1'-0"

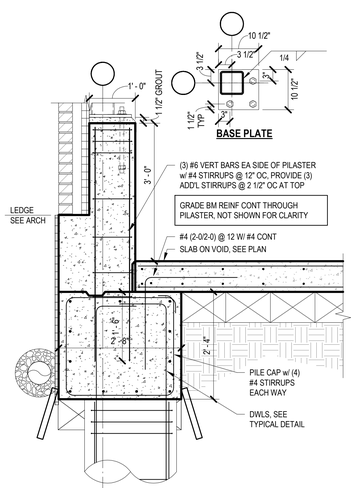

16
3/4" = 1'-0"

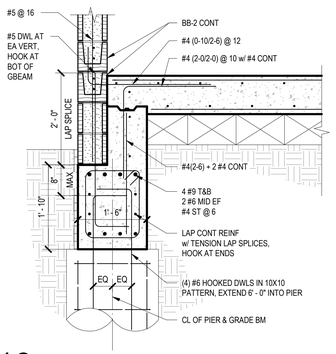

12
3/4" = 1'-0"

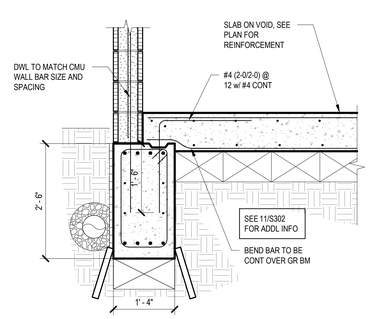

8
3/4" = 1'-0"

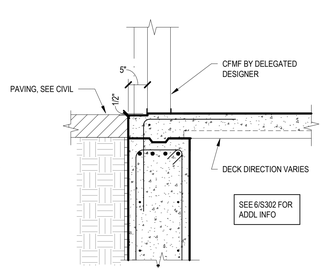

4
3/4" = 1'-0"

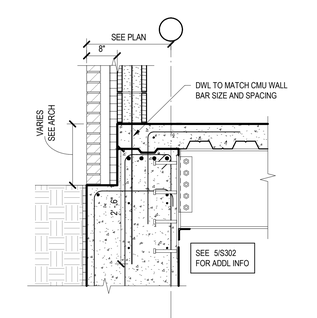

LONGVIEW POLICE DEPARTMENT

XXXX SOUTH ST. LONGVIEW, TEXAS 75601

Architect: Brinkley Sargent Wigginton Architects (972) 960-9970
Landscape: Kendall Landscape Architecture (214) 739-3226
Structural: L.A. Fuess Partners, Inc (214)
MEP: M-E Engineers (214) 741-1589
Civil: KSA Engineers, Inc (903) 236-7700
Technology: M-E Engineers (303) 421-6636

BRINKLEY SARGENT WIGINTON ARCHITECTS

History

#	Date	Description

STATE OF TEXAS
CHRISTOPHER T. MATTHEWS
105076
LICENSED PROFESSIONAL ENGINEER
8-19-2020

CONCRETE DETAILS

L.A. FUESS PARTNERS, INC.
Structural Engineers
3333 Lee Parkway, Suite 300 • Dallas, TX 75219
214.871.7010 • www.lafp.com
LAFP PROJECT NO. 19100 FIRM REG. NO. F-537

20513
08/19/2020
S303

BID ISSUE

C:\Temp\19100 - LongviewPoliceBuilding-R19_jsewrinkle2@LP.rvt
8/17/2020 11:09:04 AM

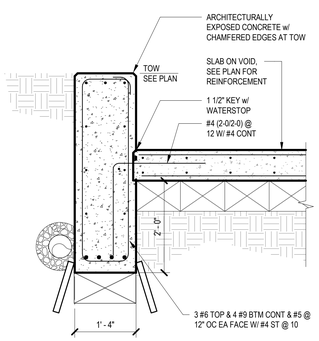

13
3/4" = 1'-0"

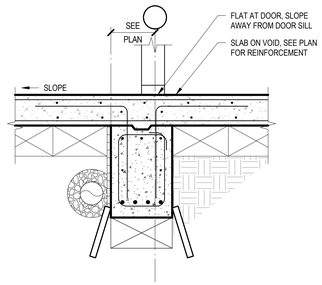

9
3/4" = 1'-0"

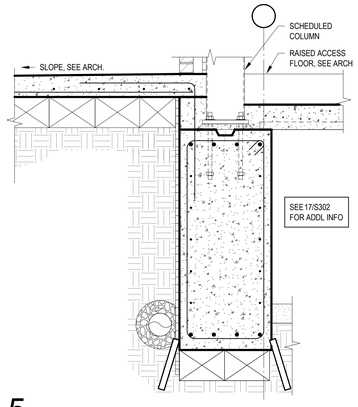

5
3/4" = 1'-0"

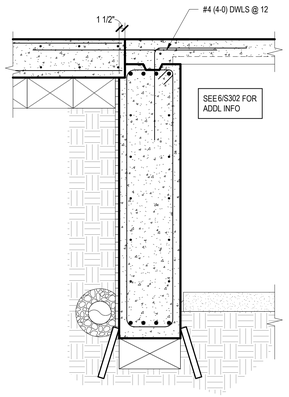

1
3/4" = 1'-0"

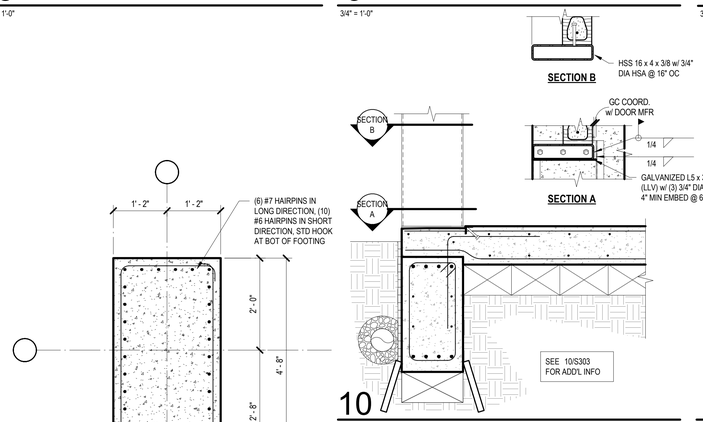

10
3/4" = 1'-0"

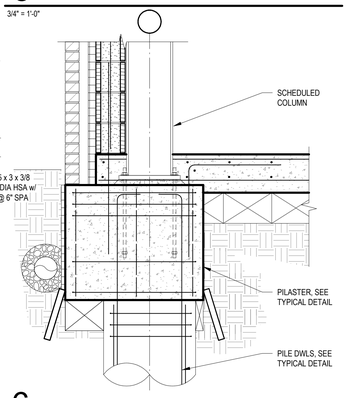

6
3/4" = 1'-0"

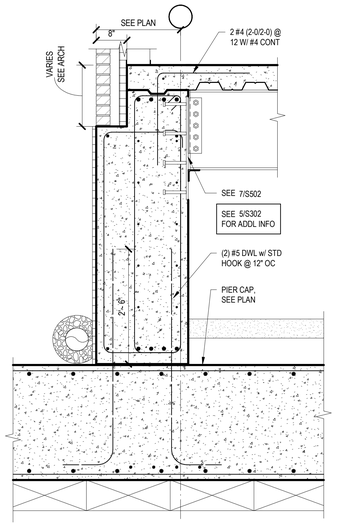

3
3/4" = 1'-0"

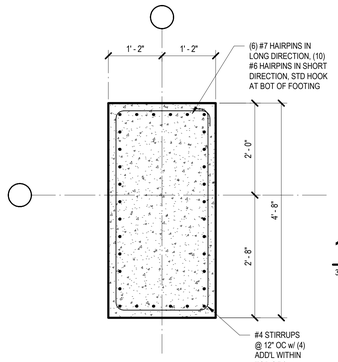

SECTION

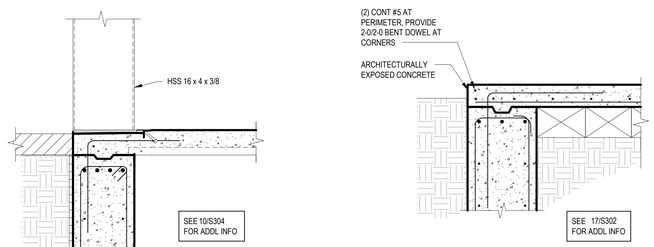

7
3/4" = 1'-0"

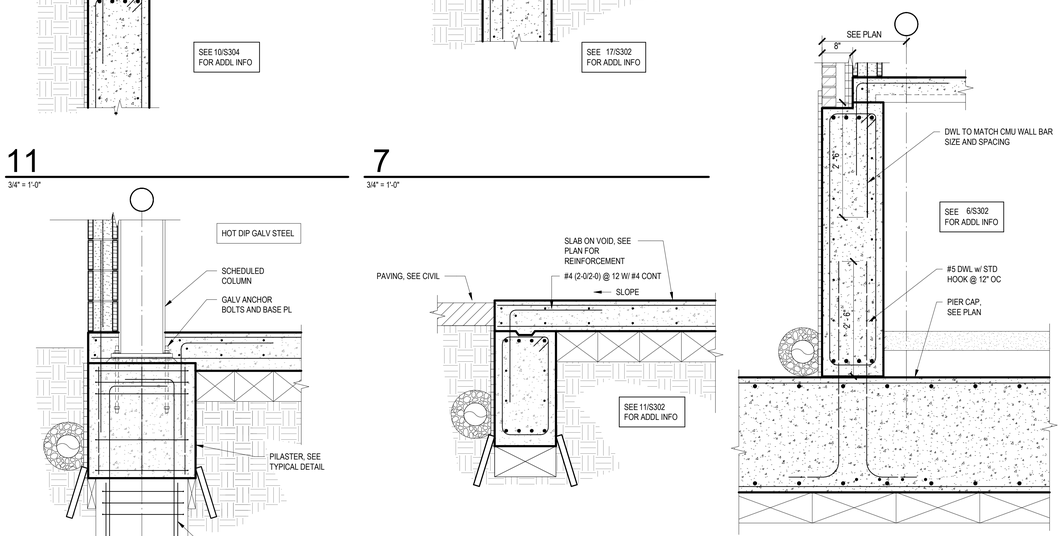

4
3/4" = 1'-0"

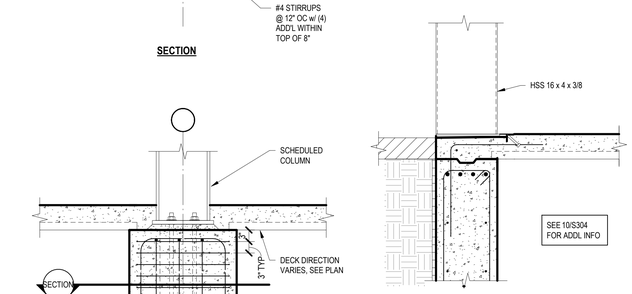

11
3/4" = 1'-0"

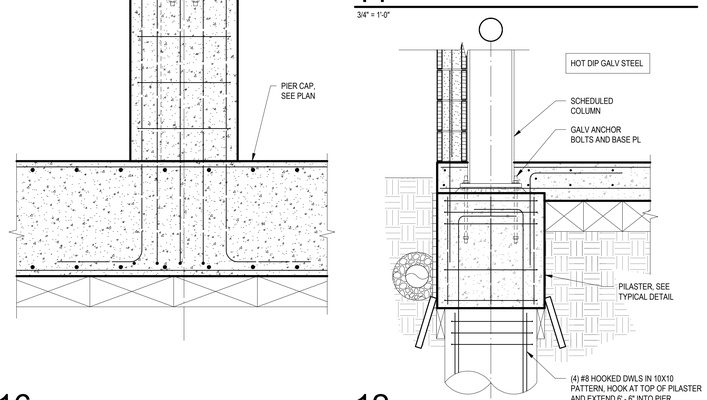

12
3/4" = 1'-0"

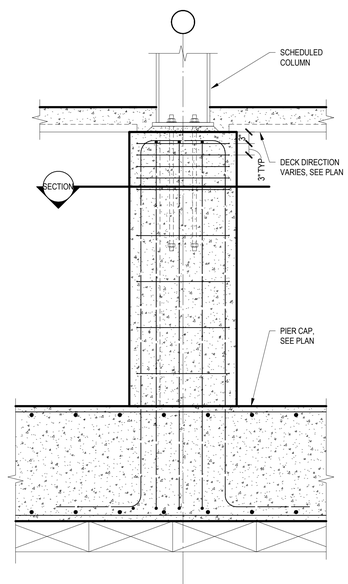

16
3/4" = 1'-0"

8
3/4" = 1'-0"

LONGVIEW POLICE DEPARTMENT

XXXX SOUTH ST. LONGVIEW, TEXAS 75601

Architect: Brinkley Sargent Wigginton Architects (972) 960-9970
Landscape: Kendall Landscape Architecture (214) 739-3226
Structural: L.A. Fuess Partners, Inc (214)
MEP: M-E Engineers (214) 741-1589
Civil: KSA Engineers, Inc (903) 236-7700
Technology: M-E Engineers (303) 421-6656

BRINKLEY SARGENT WIGINTON ARCHITECTS

History

#	Date	Description

STATE OF TEXAS
CHRISTOPHER T. MATTHEWS
105076
LICENSED
PROFESSIONAL ENGINEER
8-19-2020

CONCRETE DETAILS

BID ISSUE

20513
08/19/2020
S304

L.A. FUESS PARTNERS, INC.
Structural Engineers
3333 Lee Parkway, Suite 300 • Dallas, TX 75219
214.871.7010 • www.lafp.com
LAFP PROJECT NO. 19100 FIRM REG. NO. F-537

8/17/2020 11:09:05 AM
C:\Temp\19100 - LongviewPoliceBuilding-R19_jsauvinet2BIP.rvt

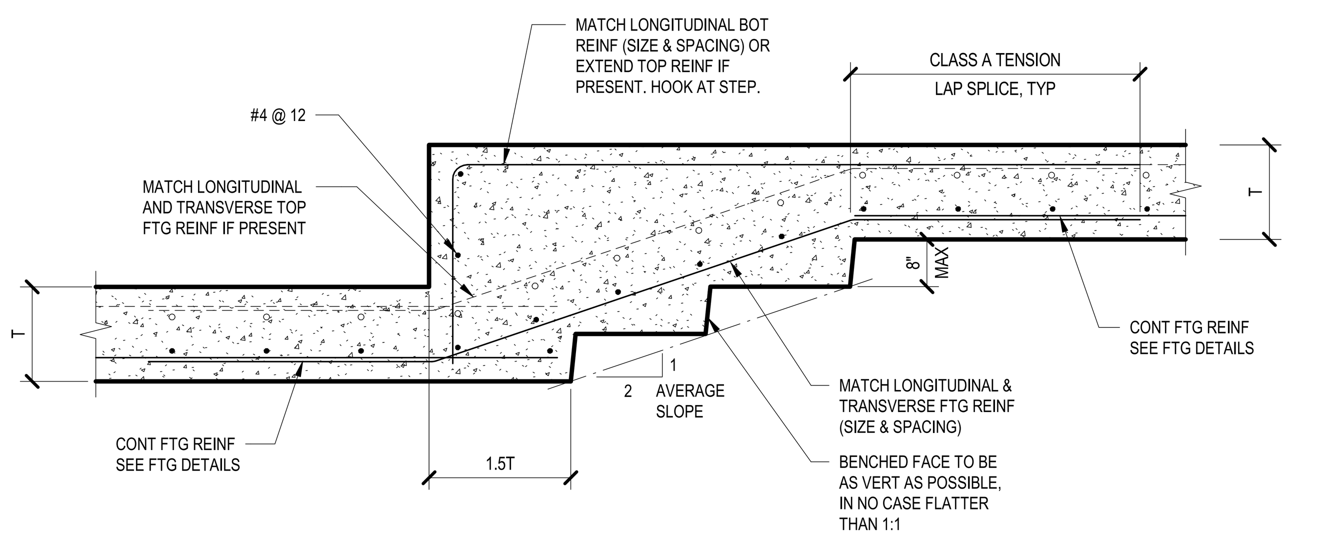

STEP IN CONTINUOUS FOOTING
21 TYPICAL DETAIL
NO SCALE

NOTES:
1. AT SCREEN WALLS, LOCATE JOINTS 30' - 0" MAX SPA, GENERALLY AT MID-BAY. DO NOT LOCATE JOINTS WITHIN 4 FEET OF UPPER LEVEL BEAM BEARING LOCATIONS.
2. AT RETAINING WALLS, PROVIDE MAXIMUM SPACING OF 3.0 x WALL HEIGHT OR 20' - 0" MAX.

T	JOINT DEPTH
< 8"	2"
8" ≤ 10"	2 1/2"
10" ≤ 12"	3"
> 12"	T x 0.25

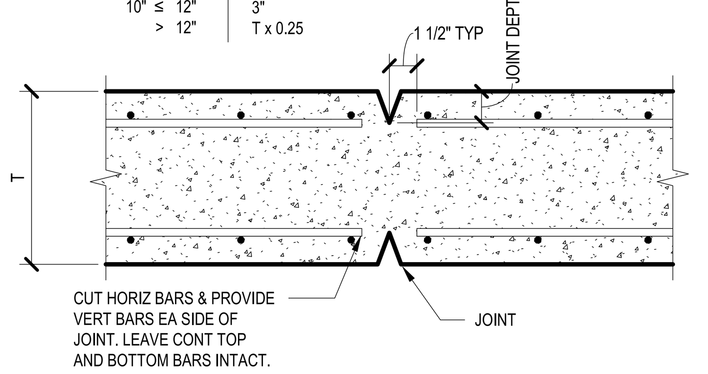

VERTICAL CONTROL JOINT IN EA SIDE OF SCREEN/RETAINING WALL
22 TYPICAL DETAIL
NO SCALE

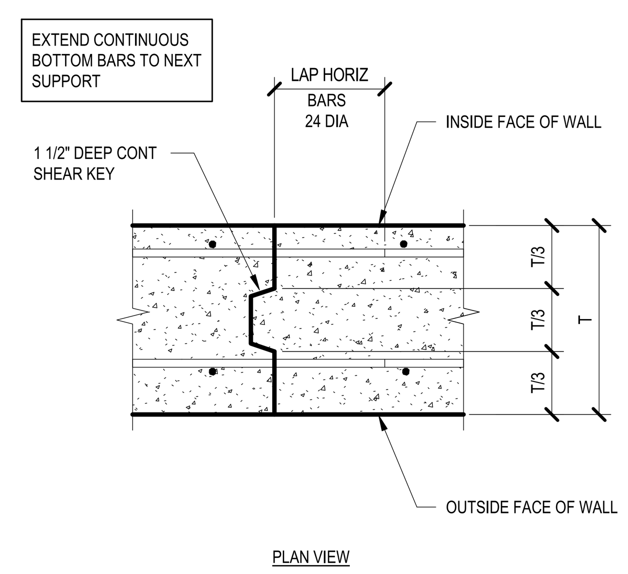

VERTICAL JOINT IN SCREEN WALL
18 TYPICAL DETAIL
NO SCALE

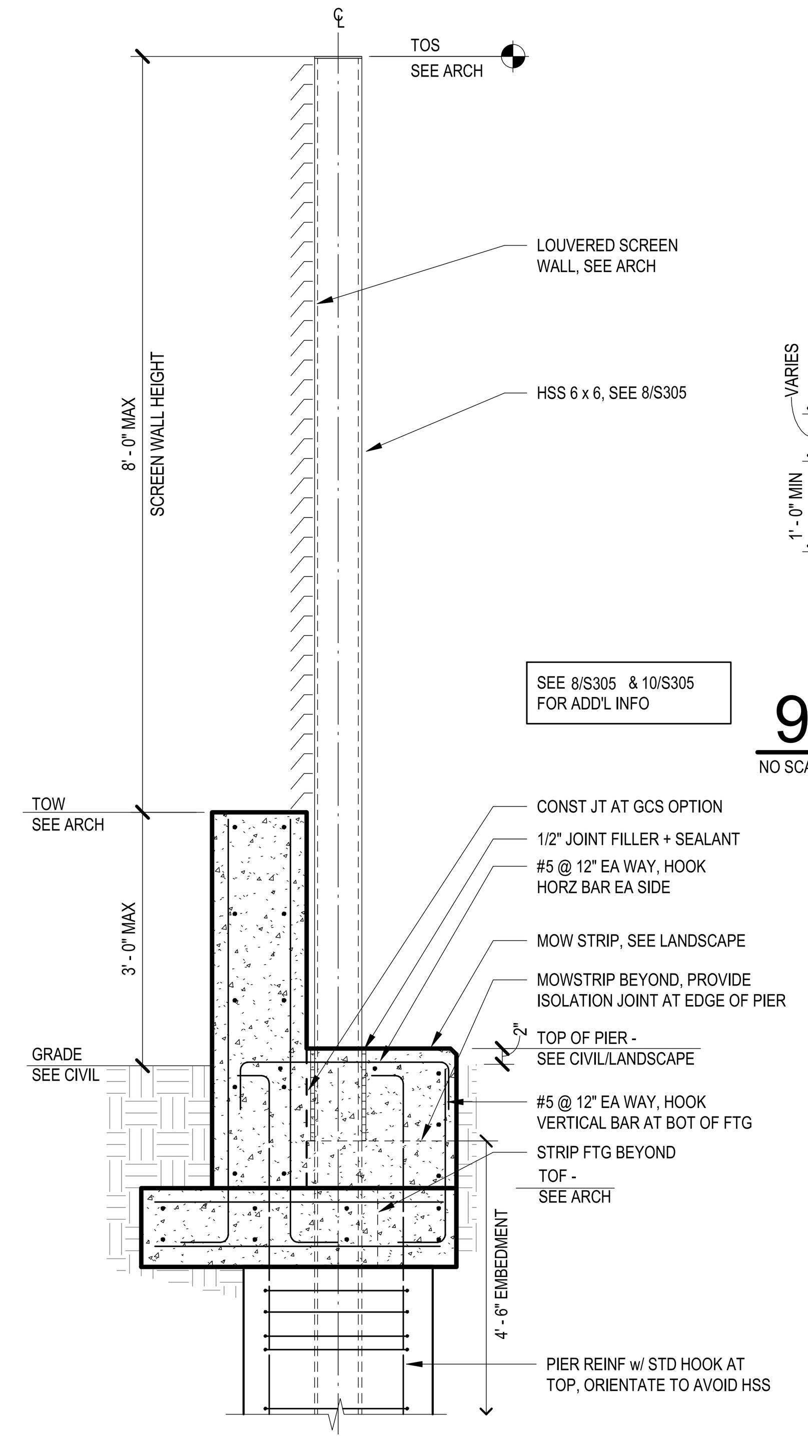

CONCRETE AND LOUVERED FENCE
14 TYPICAL DETAIL
NO SCALE

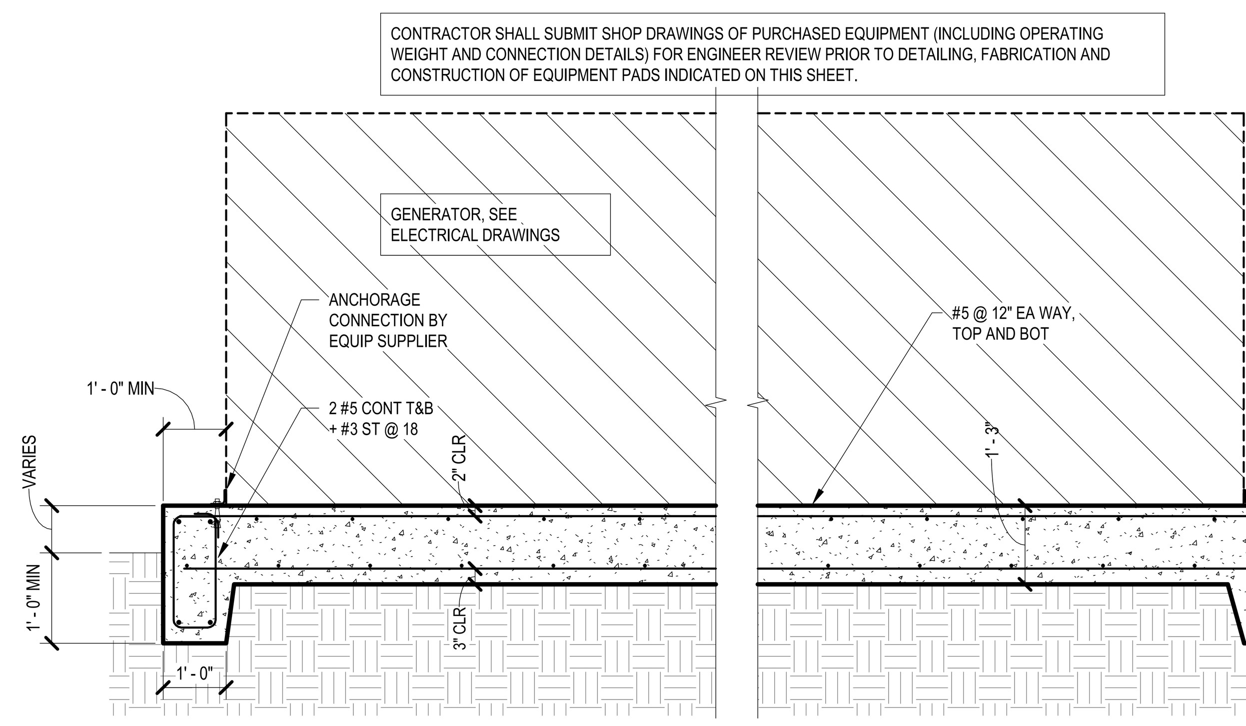

GENERATOR PAD
9 TYPICAL DETAIL
NO SCALE

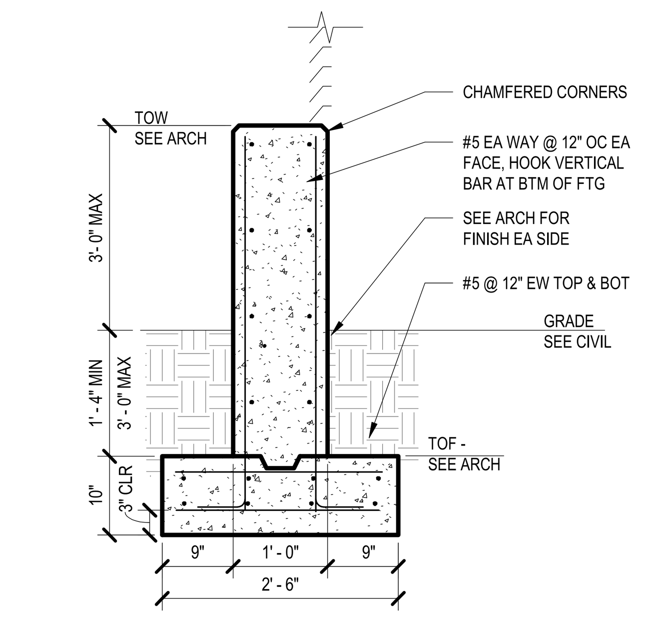

CONCRETE AND LOUVERED FENCE
10 TYPICAL DETAIL
NO SCALE

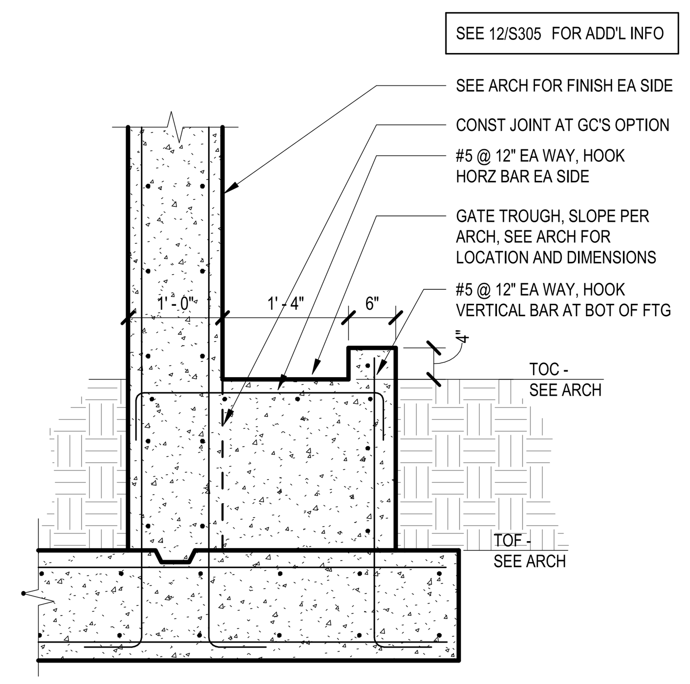

CIP SCREEN WALL AT TROUGH
6 TYPICAL DETAIL
NO SCALE

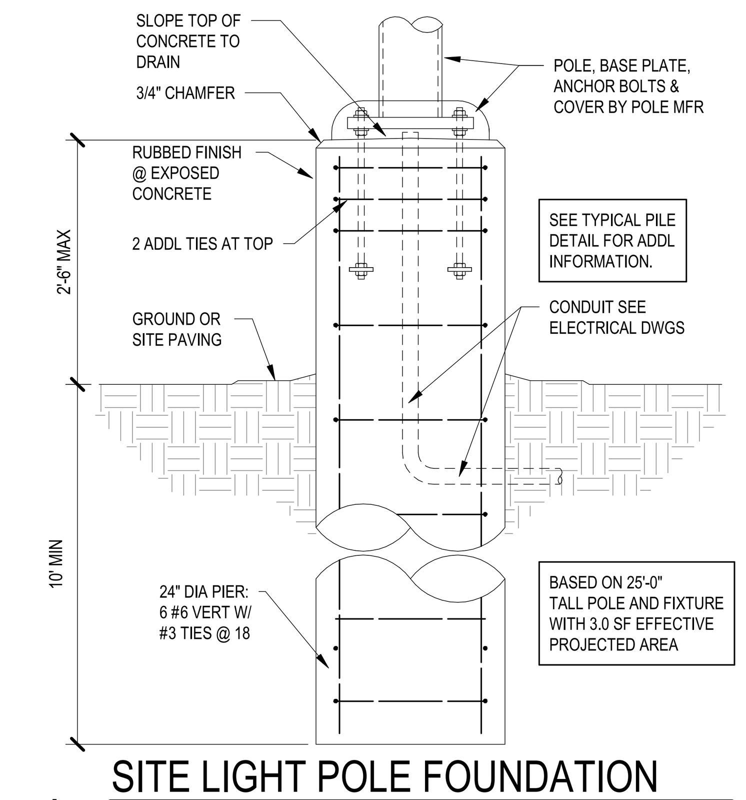

SITE LIGHT POLE FOUNDATION
1 TYPICAL DETAIL
NO SCALE

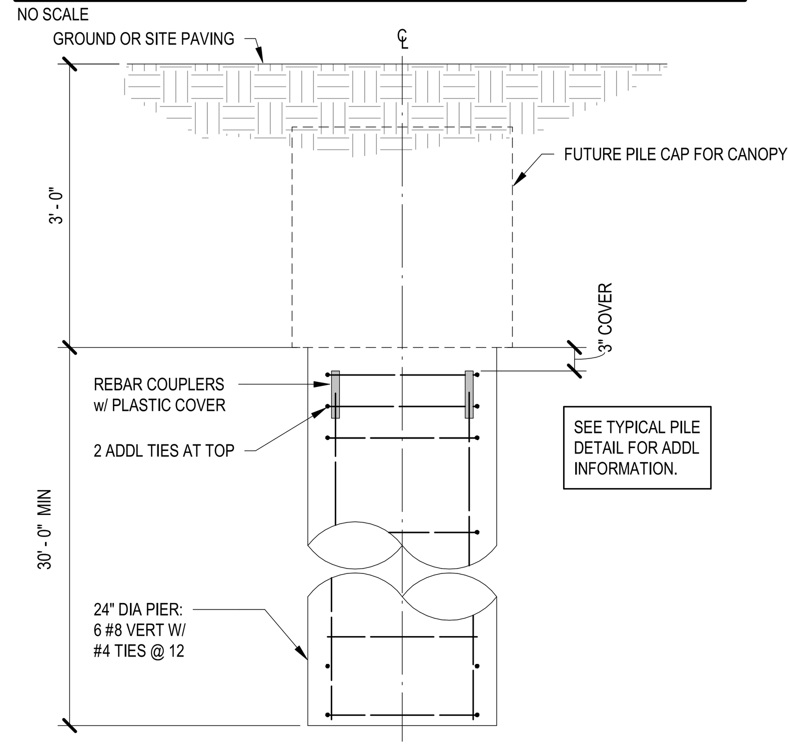

FUTURE CANOPY FOUNDATION
2 TYPICAL DETAIL
NO SCALE

NOTES:
1. AT RETAINING WALLS, LOCATE JOINTS 30' - 0" MAX SPA, GENERALLY AT MID-BAY.
2. AT RETAINING WALLS, PROVIDE MAXIMUM SPACING OF 3.0 x WALL HEIGHT OR 20' - 0" MAX.

T	JOINT DEPTH
< 8"	2"
8" ≤ 10"	2 1/2"
10" ≤ 12"	3"
> 12"	T x 0.25

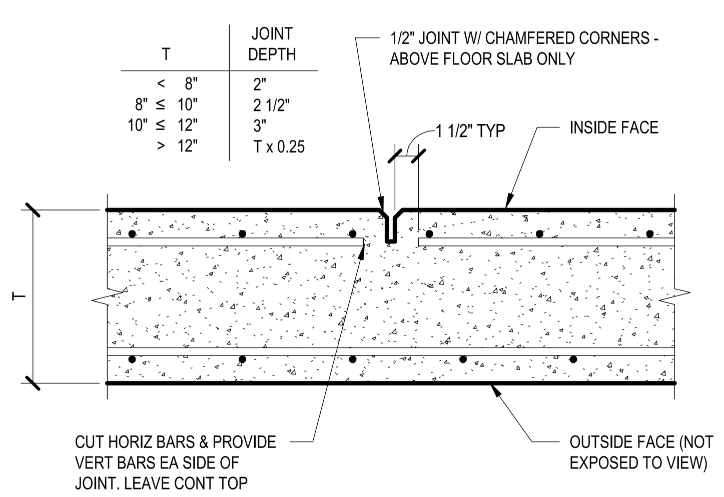

VERTICAL CONTROL JOINT IN RETAINING WALL
23 TYPICAL DETAIL
NO SCALE

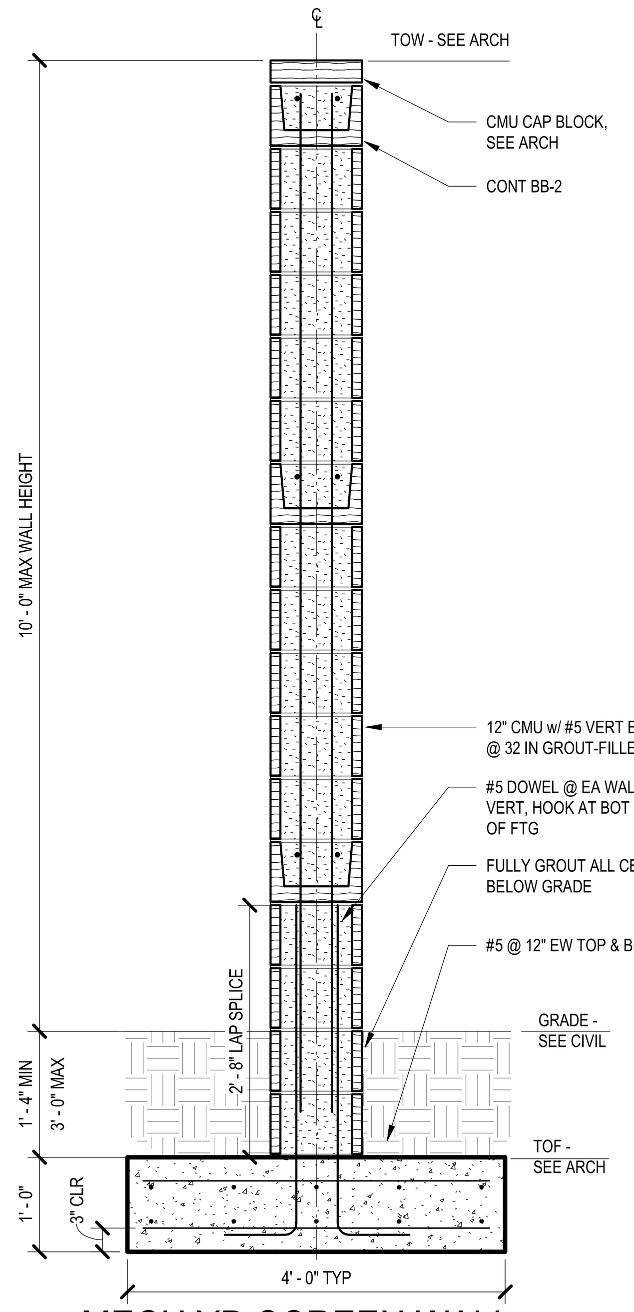

MECH YD SCREEN WALL
20 TYPICAL DETAIL
NO SCALE

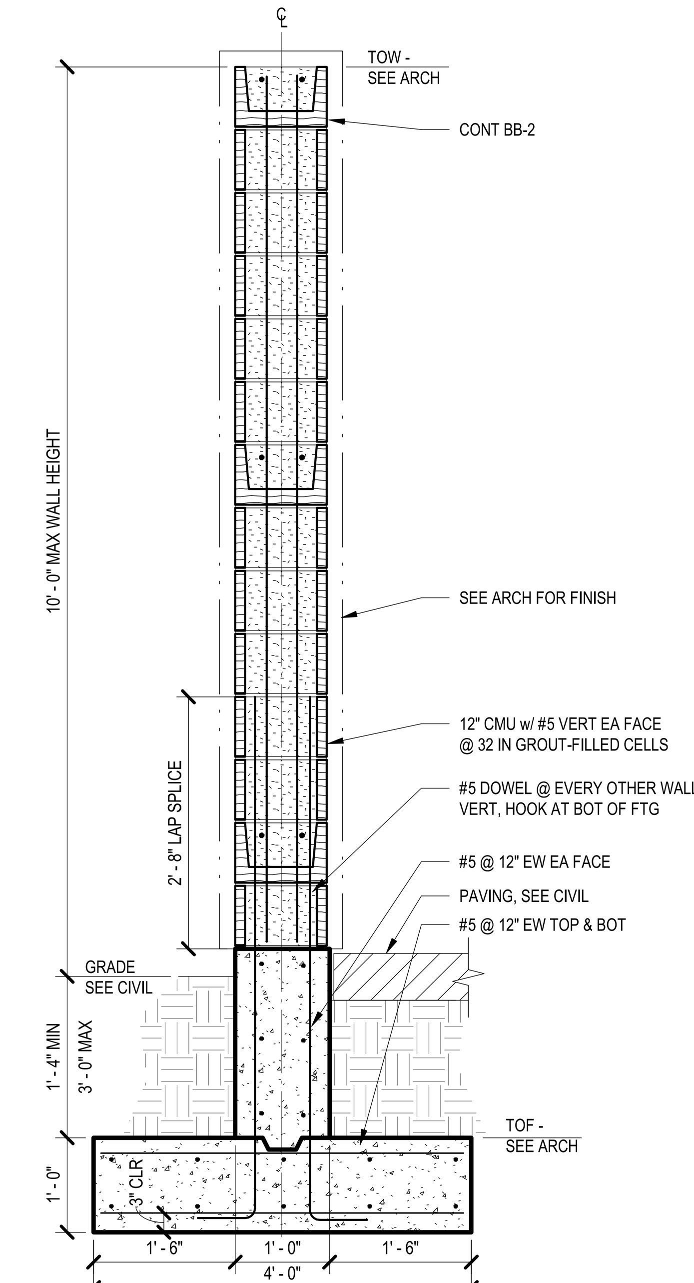

BLUE WALL SECTION
16 TYPICAL DETAIL
NO SCALE

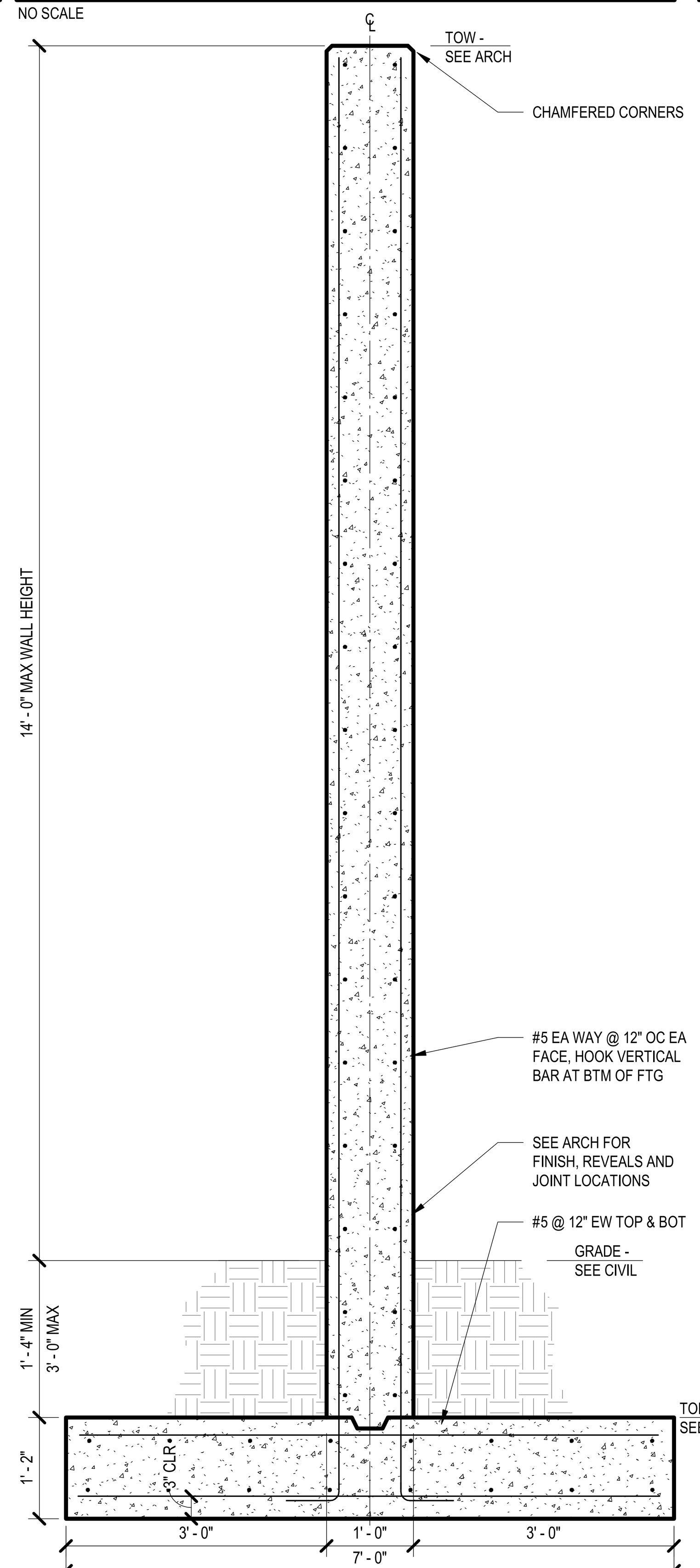

CIP SCREEN WALL
12 TYPICAL DETAIL
NO SCALE

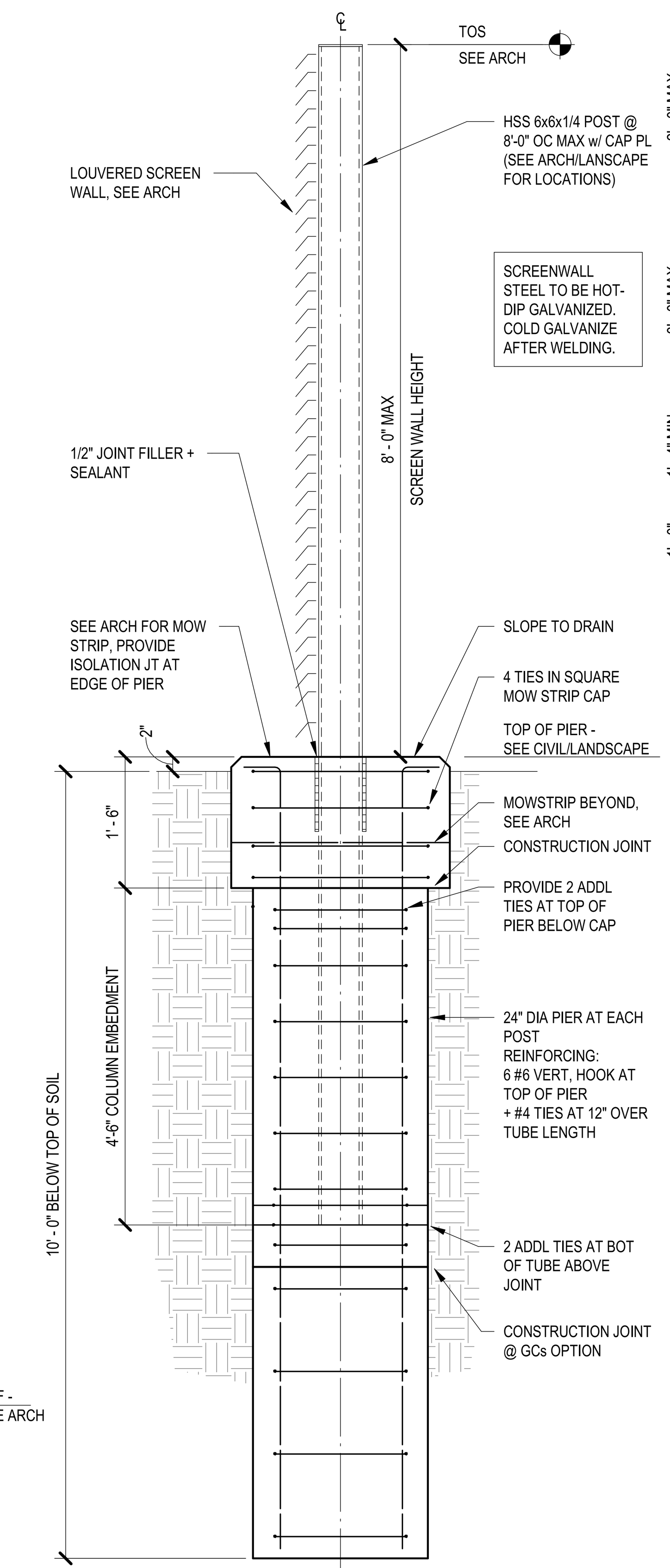

LOUVERED SCREEN WALL
8 TYPICAL DETAIL
NO SCALE

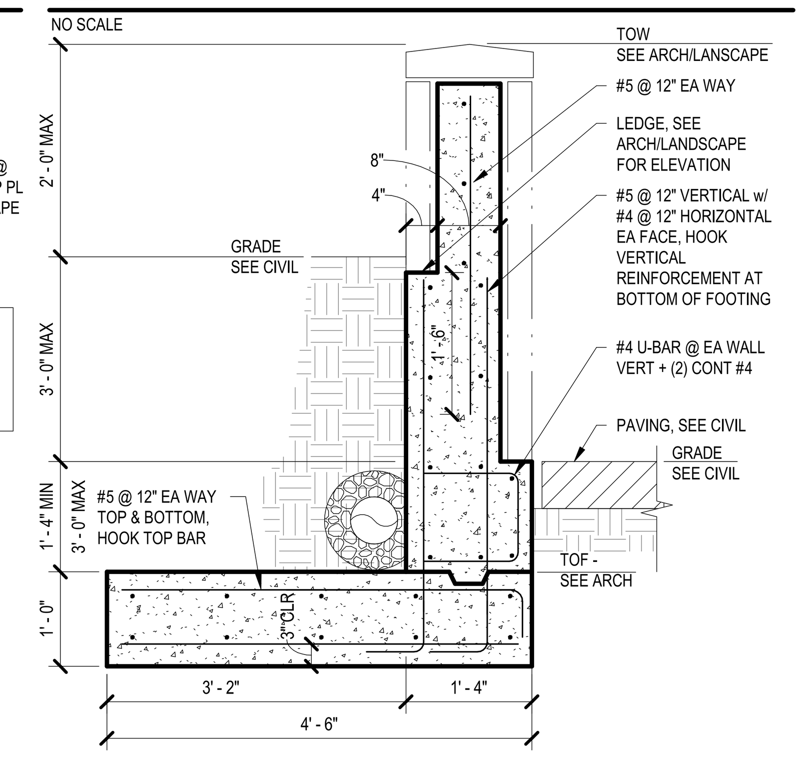

FLAG POLE LIGHT WALL - SECTION
3 TYPICAL DETAIL
NO SCALE

H (FTG HEIGHT)	W (FTG WIDTH)
0' - 0" < H < 1' - 6"	1'-0"
1' - 6" < H < 3' - 0"	2'-8"

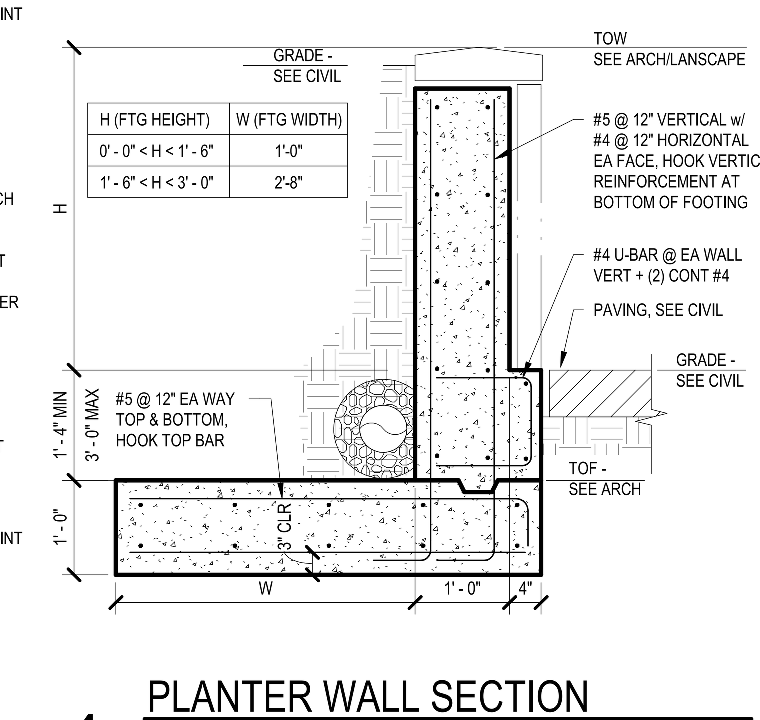

PLANTER WALL SECTION
4 TYPICAL DETAIL
NO SCALE

L.A. FUESS PARTNERS, INC.
Structural Engineers
3333 Lee Parkway, Suite 300 • Dallas, TX 75219
214.871.7010 • www.lafp.com
LAFP PROJECT NO. 19100 FIRM REG. NO. F-537

BRINKLEY SARGENT WIGINTON ARCHITECTS

Architect: Brinkley Sargent Wiginton Architects (972) 960-9970
Landscape: Kendall Landscape Architecture (214) 739-3226
Structural: L.A. Fuess Partners, Inc (214)
MEP: M-E Engineers (214) 741-1589
Civil: KSA Engineers, Inc (903) 236-7700
Technology: M-E Engineers (303) 421-6656

LONGVIEW POLICE DEPARTMENT

XXXX SOUTH ST. LONGVIEW, TEXAS 75601

History		
#	Date	Description

STATE OF TEXAS
CHRISTOPHER T. MATTHEWS
105076
LICENSED PROFESSIONAL ENGINEER
8-19-2020

SITE DETAILS

20513
08/19/2020
S305

BID ISSUE

8/17/2020 11:09:06 AM
C:\Temp\19100 - LongviewPoliceBuilding-R19_jveurinkJSFLP.rvt

Brinkley Sargent Wiginton Architects, Inc.

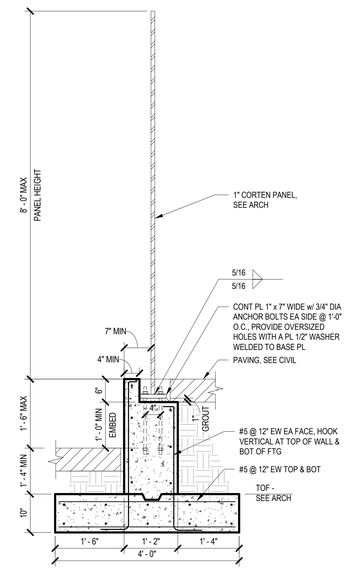

2 MEMORIAL WALL SECTION
MEMORIAL WALL SECTION

3/4" = 1'-0"

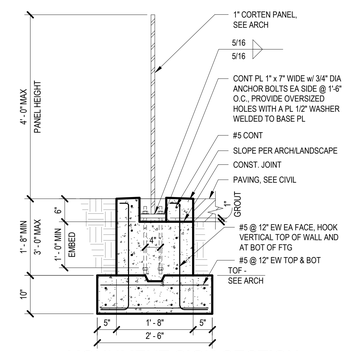

3 MONUMENT SIGN SECTION
TYPICAL DETAIL

NO SCALE

L.A. FUESS PARTNERS, INC.
Structural Engineers
3333 Lee Parkway, Suite 300 • Dallas, TX 75219
214.871.7010 • www.lafp.com
LAFP PROJECT NO. 19100 FIRM REG. NO. F-537

Architect: Brinkley Sargent Wiginton Architects (972) 960-9970
Landscape: Kendall Landscape Architecture (214) 739-3226
Structural: L.A. Fuess Partners, Inc (214)
MEP: M-E Engineers (214) 741-1589
Civil: KSA Engineers, Inc (903) 236-7700
Technology: M-E Engineers (303) 421-6656

BRINKLEY SARGENT WIGINTON ARCHITECTS

LONGVIEW POLICE DEPARTMENT

XXXX SOUTH ST. LONGVIEW, TEXAS 75601

History

#	Date	Description

STATE OF TEXAS
CHRISTOPHER T. MATTHEWS
105076
LICENSED
PROFESSIONAL ENGINEER
8-19-2020

SITE DETAILS

20513
08/19/2020
S306

BID ISSUE

8/17/2020 11:09:07 AM
C:\Temp\19100 - LongviewPoliceBuilding-R19_jwecrnk2JP.rvt

Brinkley Sargent Wiginton Architects, Inc.

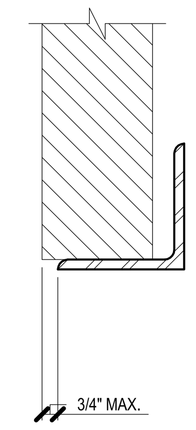

SPAN	ANGLE SIZE
< 7'-6"	L-5x5x 5/16
7'-6" TO 10'-0"	L-6x5x 3/8 LLV

NOTES:
1. SPAN = CLEAR OPENING WIDTH.
2. BEAR 8" EA. END.
3. ALL LINTELS TO BE HD GALVANIZED

21 LOOSE LINTEL SCHEDULE TYPICAL DETAIL
NO SCALE TD04110

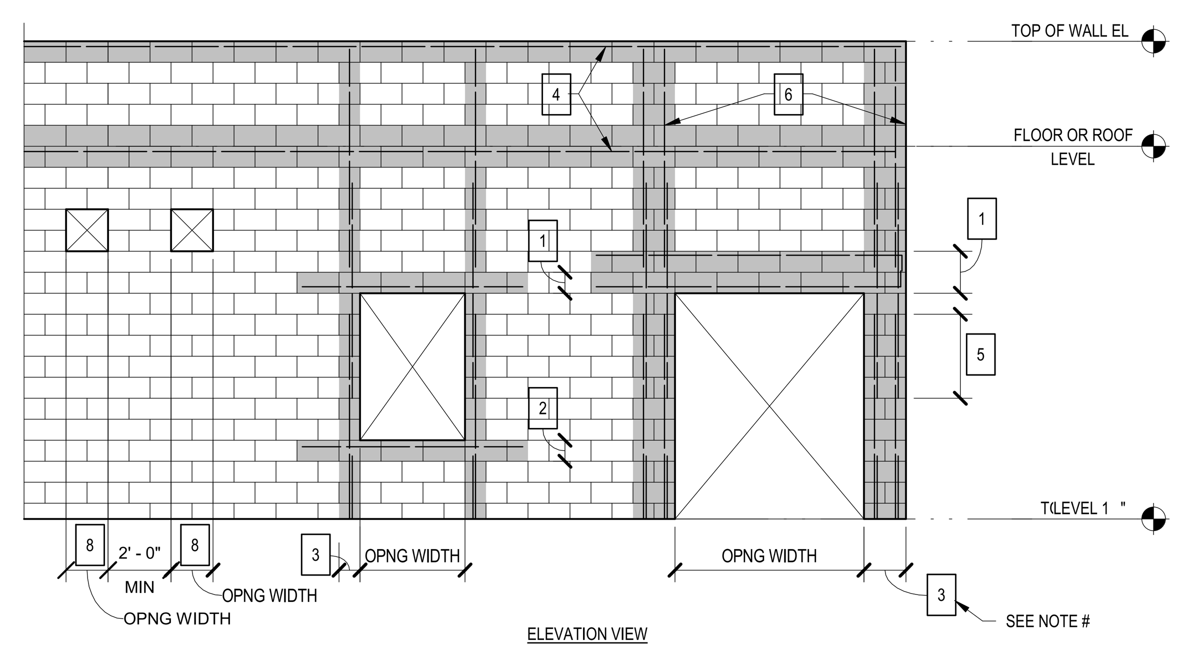

NOTES:
1. SEE CMU LINTEL SCHEDULE FOR REINFORCEMENT ABOVE OPENINGS.
2. SEE TABLE FOR CMU SILL BEAM REINFORCEMENT BELOW OPENINGS.
3. SEE TABLE FOR CMU JAMB REINFORCEMENT ADJACENT TO TYPICAL OPENINGS UNLESS NOTED OTHERWISE. JAMB REINFORCEMENT IS REQUIRED FOR ALL OPENINGS GREATER THAN 16" IN WIDTH.
4. SEE RELATED WALL SECTIONS AND ELEVATIONS FOR SIZE AND LOCATIONS OF BOND BEAMS
5. SEE LAP SPLICE SCHEDULE FOR MINIMUM REQUIRED SPLICE LENGTHS.
6. EXTEND VERTICAL REINFORCEMENT TO TOP OF WALL FOR OPENINGS IN AN EXTERIOR WALL. EXTEND VERTICAL REINFORCEMENT TO TOP OF WALL OR A MINIMUM OF LAP SPLICE LENGTH PER SCHEDULE PAST FLOOR LEVEL ABOVE FOR OPENINGS IN AN INTERIOR WALL.
7. TYPICAL WALL REINFORCEMENT IS NOT SHOWN FOR CLARITY. THE MAXIMUM SPACING BETWEEN ANY TWO ADJACENT GROUTED AND REINFORCED VERTICAL OR HORIZONTAL CELLS SHALL NOT EXCEED REQUIREMENTS SHOWN IN GENERAL NOTES, DETAILS, OR ELEVATIONS.
8. MISCELLANEOUS MEP OPENINGS 16" WIDE OR SMALLER DO NOT REQUIRE JAMB OR LINTEL REINFORCEMENT.

CMU SILL REINFORCING SCHEDULE

	MAX OPNG WIDTH	DEPTH	REINF
8" CMU	8' - 8"	8"	2 #4
	12' - 8"	16"	2 #5 T&B
12" CMU	10' - 8"	8"	2 #4
	16' - 0"	16"	2 #5 T&B

CMU JAMB REINFORCING SCHEDULE

	MAX OPNG WIDTH	INTERIOR JAMB WIDTH	EXTERIOR JAMB WIDTH
CMU	3' - 4"	8"	8"
	6' - 8"	8"	16"
	10' - 0"	16"	24"
	12' - 8"	16"	24"
	24' - 0"	16"	32"

18 CMU WALL OPENING REINFORCING TYPICAL DETAIL
NO SCALE

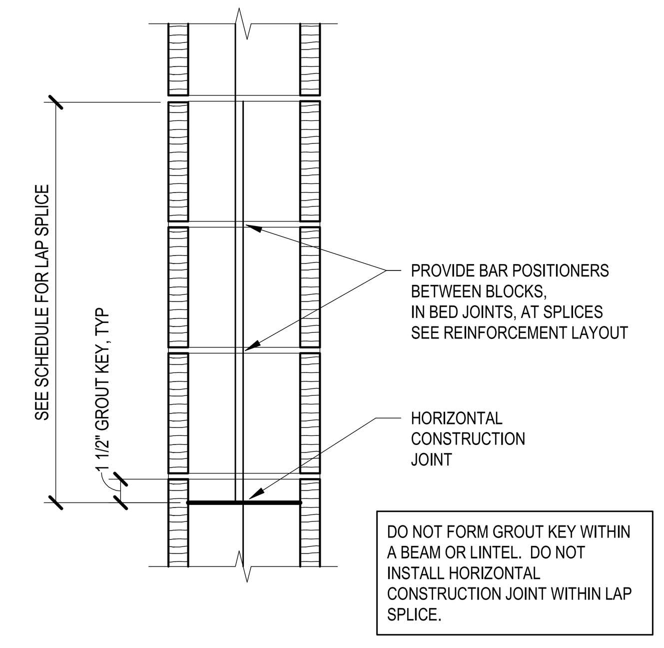

9 MASONRY CONSTRUCTION JOINT TYPICAL DETAIL
NO SCALE

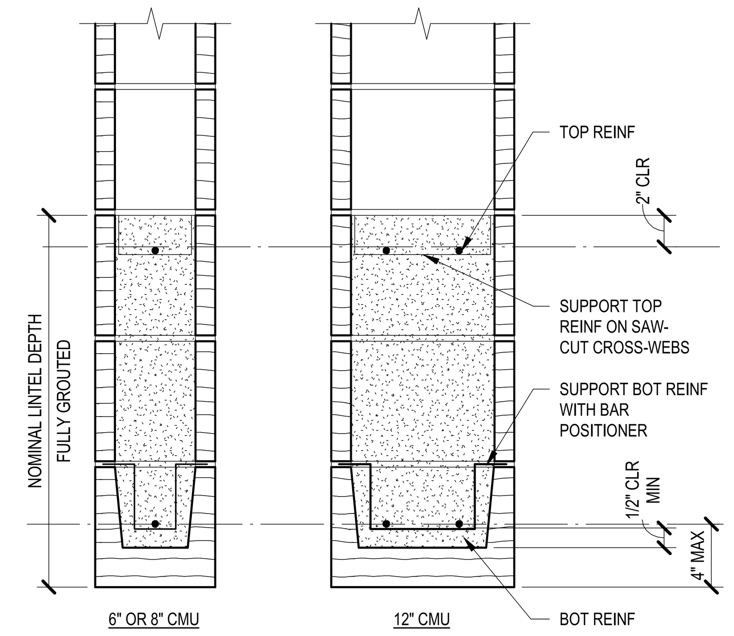

5 CMU LINTELS TYPICAL DETAIL
NO SCALE

CMU LINTEL SCHEDULE

WALL THICKNESS	MAX OPENING	LINTEL DEPTH	TOP REINF	BOT REINF
8"	4' - 0"	8"	NONE	1 #4
	7' - 0"	16"	1 #4	2 #4
	15' - 0"	24"	2 #4	2 #4
	24' - 0"	32"	2 #6	2 #6
12"	3' - 4"	8"	NONE	2 #4
	6' - 8"	16"	2 #4	2 #4
	10' - 0"	24"	2 #4	2 #4
	12' - 8"	24"	2 #5	2 #5
	16' - 0"	32"	2 #6	2 #6

NOTES:
1. CONSTRUCT BOTTOM COURSE OF LINTEL OF SOLID-BOTTOM, TROUGH-STYLE BLOCKS, UNLESS OTHERWISE NOTED.
2. A CMU LINTEL IS REQUIRED FOR OPENINGS GREATER THAN 16" IN WIDTH.
3. LINTEL REINFORCEMENT MAY NOT BE LAP SPLICED ABOVE AN OPENING.
4. CONTROL JOINTS ARE NOT PERMITTED TO OCCUR WITHIN LINTEL REINFORCEMENT.
5. SEE CMU WALL REINFORCING DETAIL FOR VERTICAL REINFORCEMENT PLACEMENT AT JAMBS.
6. EXTEND HORIZONTAL REINFORCEMENT 24" OR 40 BAR DIAMETERS BEYOND THE FACE OF OPENING. PROVIDE STD HOOK AT END OF BAR IF HORIZONTAL EXTENSION IS NOT POSSIBLE.
7. PRECAST CONCRETE LINTELS OF THE SAME SIZE AND LENGTH MAY BE SUBSTITUTED EXCEPT THAT TOP BARS SHALL BE PROVIDED EQUAL TO SCHEDULED BOTTOM BARS.

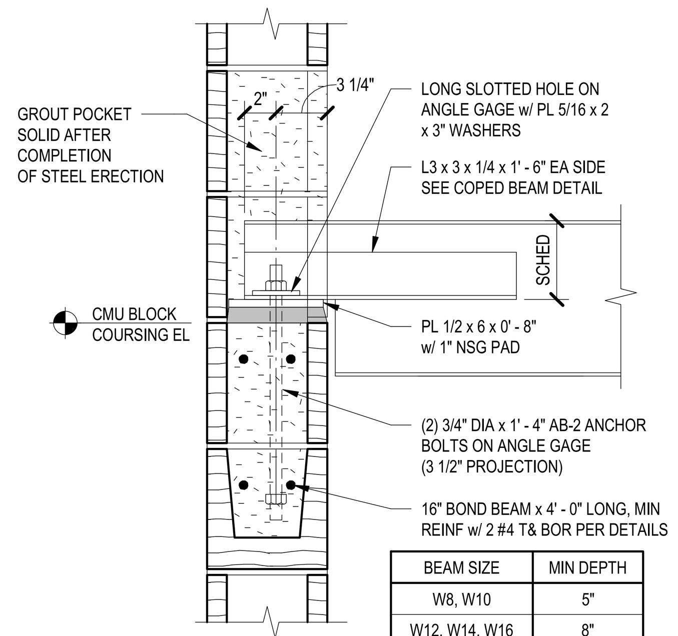

BEAM SIZE	MIN DEPTH
W8, W10	5"
W12, W14, W16	8"
W18, W21, W24	12"

22 BEAM TO CMU CONNECTION TYPICAL DETAIL
NO SCALE TD76

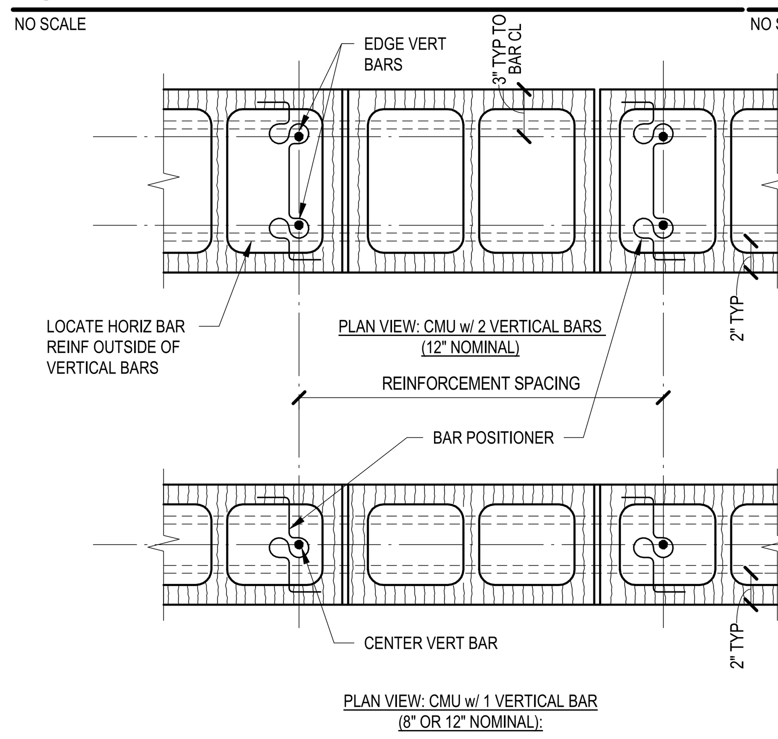

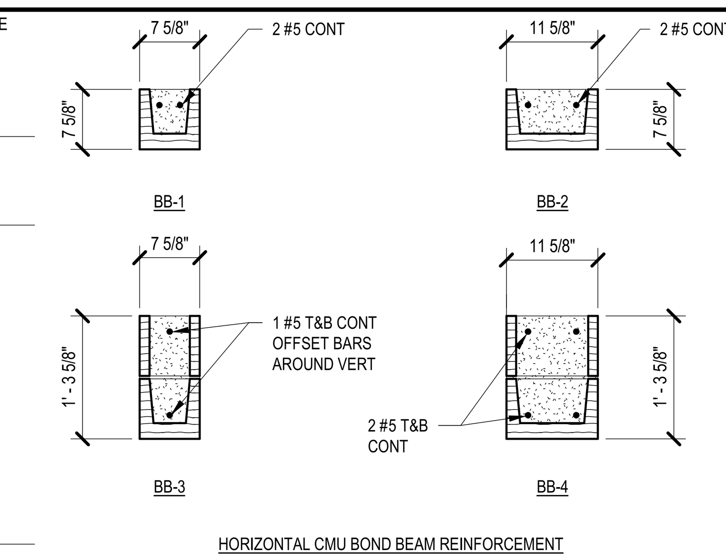

CMU REINFORCEMENT LAYOUT NOTES:
1. LOCATE VERTICAL OR HORIZONTAL REINFORCEMENT AT LEAST 1/2" FROM CMU SHELL TO ALLOW FOR PROPER GROUT CONSOLIDATION.
2. THESE BOND BEAMS APPLY TO WALLS WHERE BOND BEAMS ARE NOT SPECIFICALLY REFERENCED. SEE SECTIONS & DETAILS FOR SPECIAL BOND BEAMS THAT ARE REQUIRED.
3. CONSTRUCT BOTTOM COURSE OF A BOND BEAM USING SOLID BOTTOM, TROUGH-STYLE MASONRY UNITS, UNO.

MASONRY SPLICE SCHEDULE - GRADE 60

f'm	1900 - 2000 PSI		2500 PSI	
BAR SIZE	HORIZ OR EDGE VERT	CENTER VERT	HORIZ OR EDGE VERT	CENTER VERT
#4	24"	16"	20"	14"
#5	36"	24"	32"	22"
#6	54"	45"	54"	40"
#7	64"	62"	64"	54"
#8	72"	72"	72"	72"

NOTES:
1. SPLICE LENGTHS GIVEN ARE FOR GRADE 60 REINFORCING BARS.
2. USE LONGEST LENGTH WHEN SPLICING BARS OF DIFFERENT SIZE.
3. INCREASE SPLICE LENGTH OF EPOXY-COATED REINFORCEMENT 50% OVER TABLE VALUES, UP TO A MAXIMUM OF 96 BAR DIAMETERS
4. SEE PLAN VIEWS FOR DEFINITION OF HORIZ, EDGE VERT, AND CENTER VERT BARS.

10 CMU REINFORCEMENT LAYOUT, BOND BEAMS, AND SPLICE SCHEDULE TYPICAL DETAIL
NO SCALE

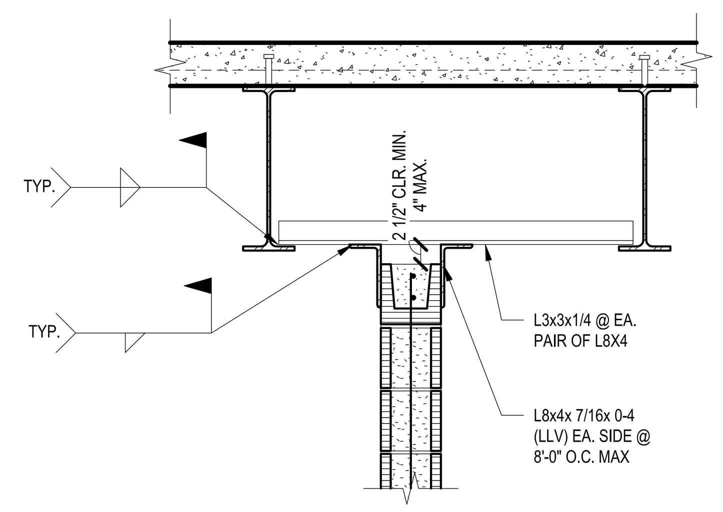

19 MASONRY WALL BRACING TYPICAL DETAIL
NO SCALE TD48

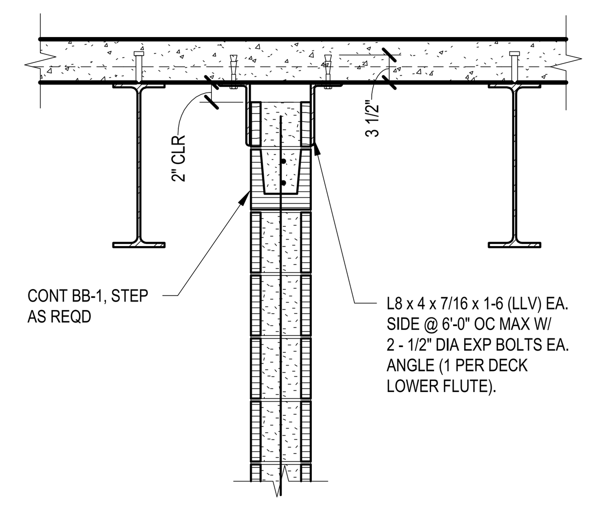

15 MASONRY WALL BRACING TYPICAL DETAIL
NO SCALE TD04170 alt

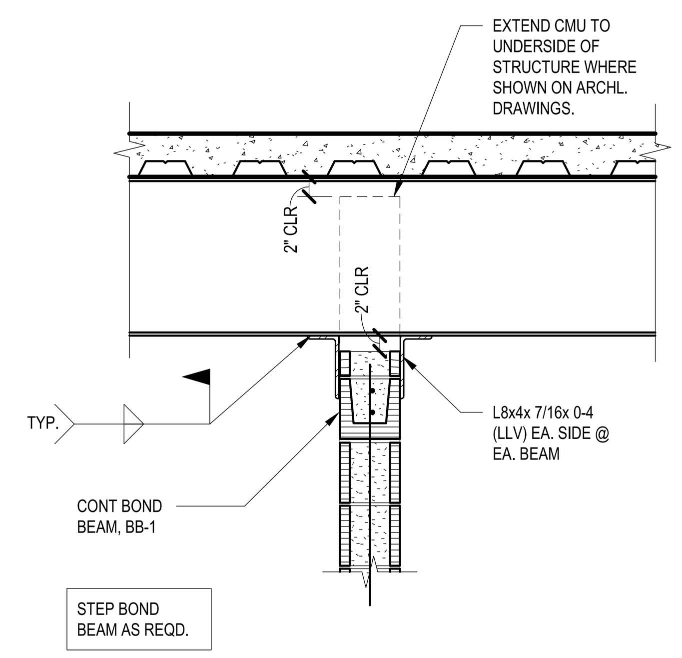

11 MASONRY WALL BRACING TYPICAL DETAIL
NO SCALE TD49

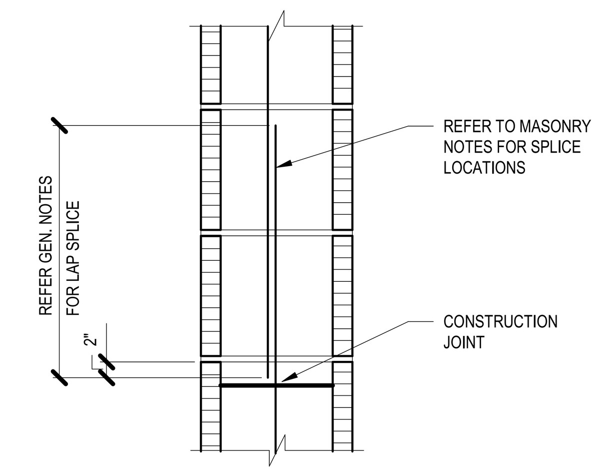

7 PILASTER CONSTRUCTION JOINT TYPICAL DETAIL
NO SCALE TD04130

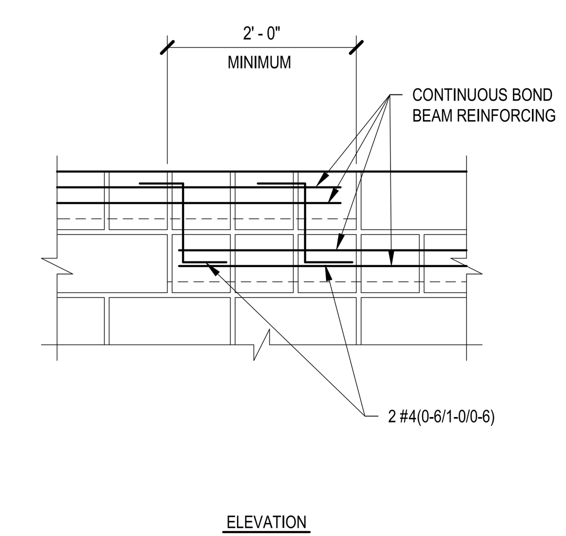

3 STEP IN BOND BEAM TYPICAL DETAIL
NO SCALE TD04103

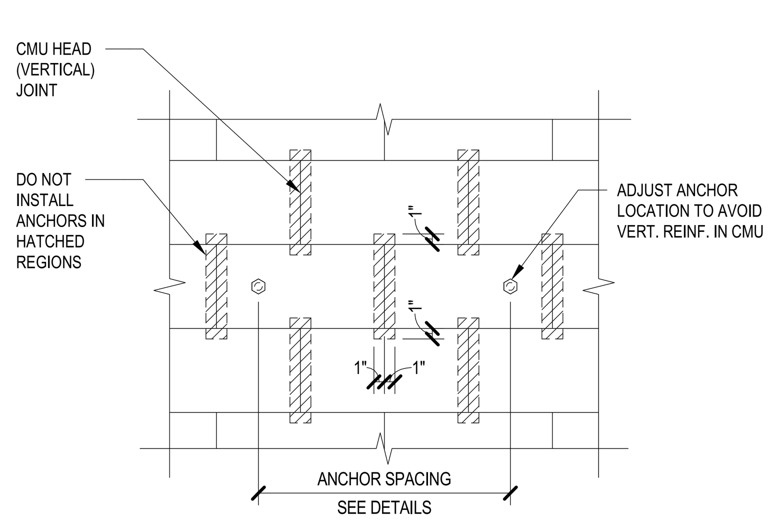

20 CMU ANCHOR INSTALLATION TYPICAL DETAIL
NO SCALE 409

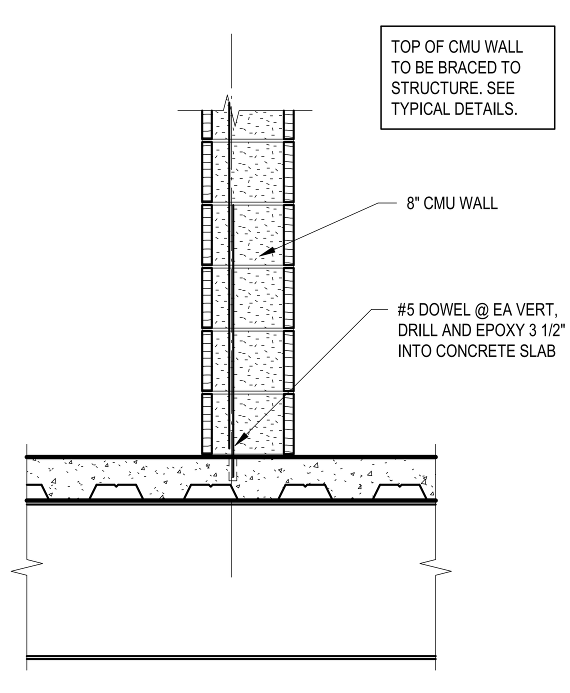

16 INTERIOR CMU WALL TYPICAL DETAIL
NO SCALE CMU BASE

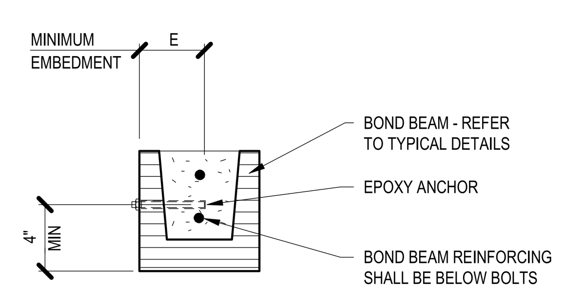

BOLT DIA	E
1/2 "	4"
5/8 "	4"
3/4 "	6"
7/8 "	6"

12 MASONRY ANCHOR BOLTS TYPICAL DETAIL
NO SCALE TD04105

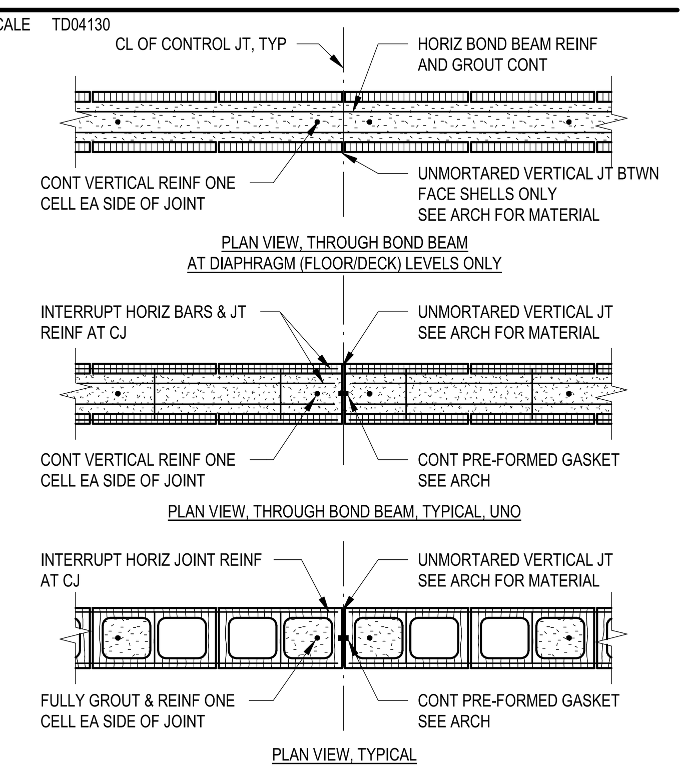

8 CMU CONTROL JOINT TYPICAL DETAIL
NO SCALE

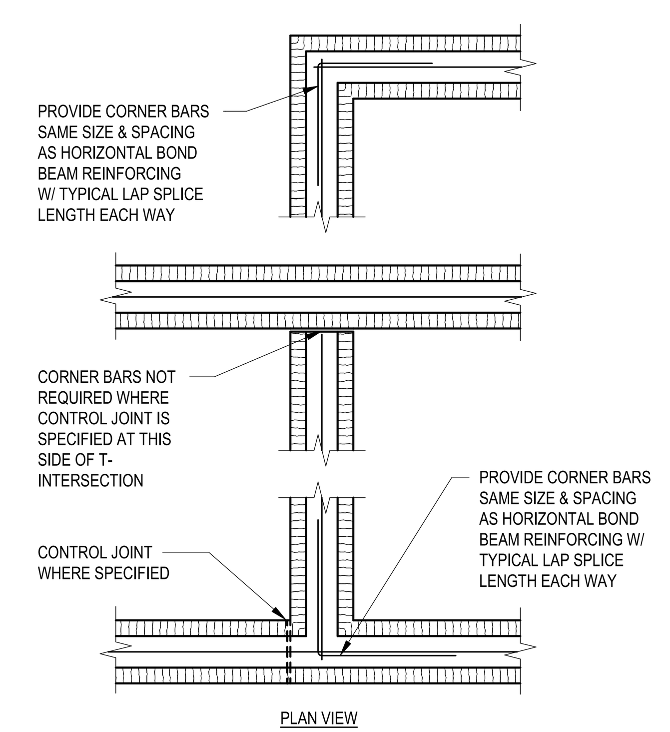

4 BOND BEAM INTERSECTIONS TYPICAL DETAIL
NO SCALE

L.A. FUESS PARTNERS, INC.
Structural Engineers
3333 Lee Parkway, Suite 300 • Dallas, TX 75219
214.871.7010 • www.lafp.com
LAFP PROJECT NO. 19100 FIRM REG. NO. F-537

Architect: Brinkley Sargent Wiginton Architects (972) 960-9970
Landscape: Kendall Landscape Architecture (214) 739-3226
Structural: L.A. Fuess Partners, Inc (214)
MEP: M-E Engineers (214) 741-1589
Civil: KSA Engineers, Inc (903) 236-7700
Technology: M-E Engineers (303) 421-6656

BRINKLEY SARGENT WIGINTON ARCHITECTS

LONGVIEW POLICE DEPARTMENT
XXXX SOUTH ST. LONGVIEW, TEXAS 75601

History

#	Date	Description

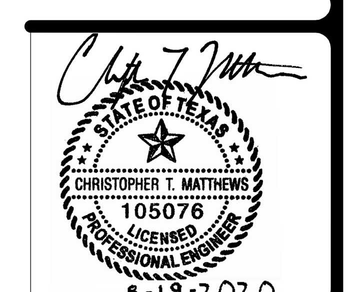

TYPICAL MASONRY DETAILS

20513
08/19/2020
S401

BID ISSUE

8/17/2020 11:09:12 AM
C:\Temp\19100 – LongviewPoliceBuilding–R19_jveurinkJSFLP.rvt

Brinkley Sargent Wiginton Architects, Inc.

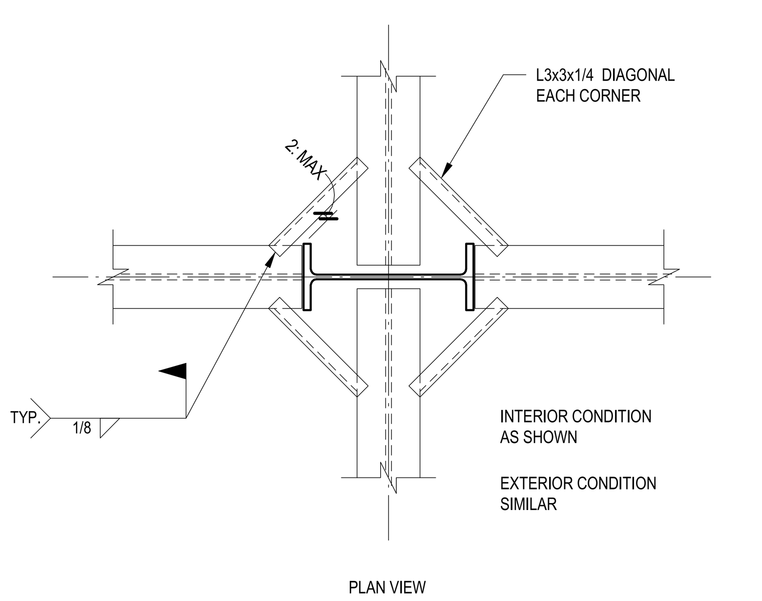

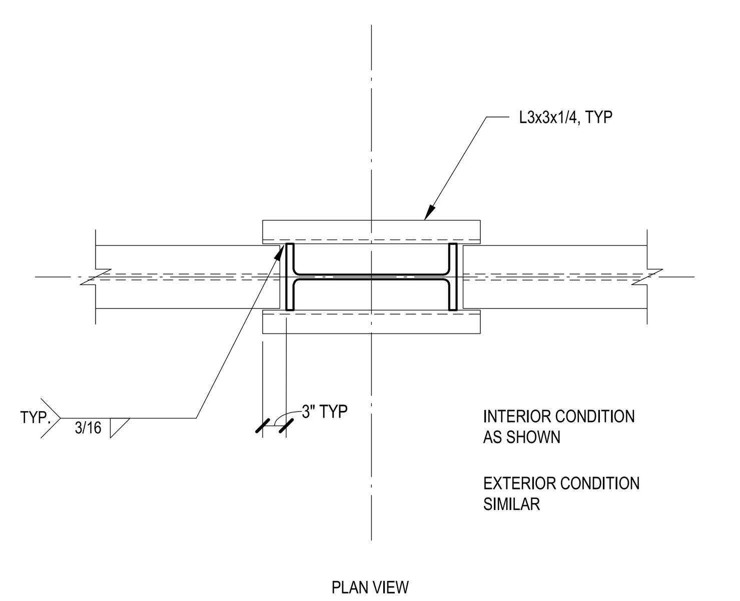

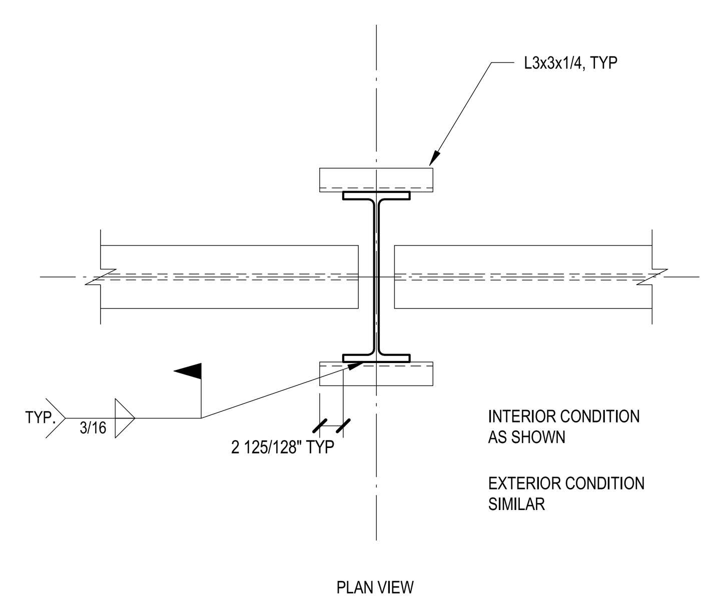

21 FLOOR DECK SUPPORT TYPICAL DETAIL
NO SCALE TD40

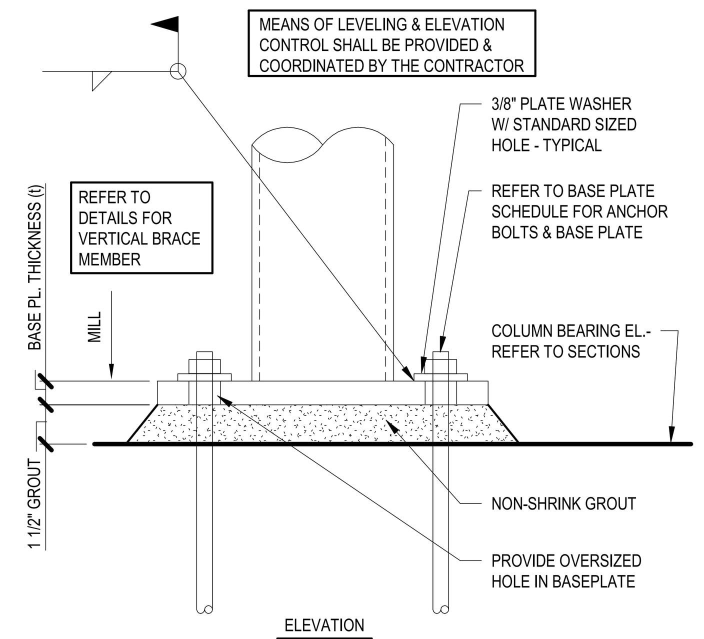

9 VERTICAL BRACE COL. BASE PLATE TYPICAL DETAIL
NO SCALE TD05122

STEEL COLUMN SCHEDULE

COL MARK	COL SIZE	BASE PLATE DIMENSIONS: DIM "A"	DIM "B"	t	DIM "C"	DIM "D"	DIM "E"	DETAIL	ANCHOR BOLTS: NUM	TYPE	DIA	EMBED LENGTH
C1	W10x22	1' - 0"	1' - 4"	3/4"	4 1/2"	6 1/2"	---	7/S501	4	AB-1	3/4"	1' - 0"
C1A	W10x22	1' - 0"	1' - 4"	1' - 3"	4 1/2"	6 1/2"	---	7/S501	4	AB-1	3/4"	1' - 0"
C2	W12x45	1' - 2"	1' - 6"	1"	5 1/2"	7 1/2"	---	7/S501	4	AB-1	3/4"	1' - 0"
C2A	W12X45	2' - 6"	1' - 2"	1 1/2"	9 1/4"	4 1/2"	6 1/2"	4/S521	8	AB-2	1 1/2"	2' - 6"
C2B	W12X45	2' - 1"	1' - 4"	1"	7"	3"	6"	8/S521	6	AB-2	1 1/4"	2' - 6"
C3	W12x65	1' - 6"	1' - 6"	1 1/4"	7 1/2"	7 1/2"	---	7/S501	4	AB-1	3/4"	1' - 0"
C4	W12x79	1' - 6"	1' - 6"	1 1/2"	7 1/2"	7 1/2"	---	7/S501	4	AB-1	3/4"	1' - 0"
C5	W14x68	1' - 4"	1' - 8"	3/4"	6 1/2"	8 1/2"	---	7/S501	4	AB-1	3/4"	1' - 0"
C5A	W14x68	2' - 9"	1' - 4"	2"	9"	3 1/2"	8"	8/S521	6	AB-2	1 3/4"	2' - 6"
C6	HSS8 x 8 x 1/4	1' - 2"	10"	3/4"	5 1/2"	3"	---	8/S501	4	AB-1	3/4"	1' - 0"
C7	HSS6 x 6 x 5/16	1' - 0"	1' - 0"	3/4"	4 1/2"	4 1/2"	---	8/S501	4	AB-1	3/4"	1' - 0"
C8	HSS8 x 8 x 3/8	1' - 2"	10"	3/4"	5 1/2"	3"	---	8/S501	4	AB-1	3/4"	1' - 0"
C8A	HSS8 x 8 x 3/8	2' - 0"	1' - 0"	1 1/4"	7"	3"	5"	12/S521	6	AB-2	1"	1' - 6"
C9	HSS10 x 8 x 1/4	1' - 0"	1' - 4"	3/4"	3"	6"	---	8/S501	4	AB-1	3/4"	1' - 0"
C10	W10x33	1' - 2"	1' - 4"	1 1/4"	5 1/2"	6 1/2"	---	7/S501	0	AB-1	3/4"	2' - 6"

NOTE: ALL EXPOSED BASE PLATES AND ANCHORS BOLTS TO BE HOT DIP GALVANIZED

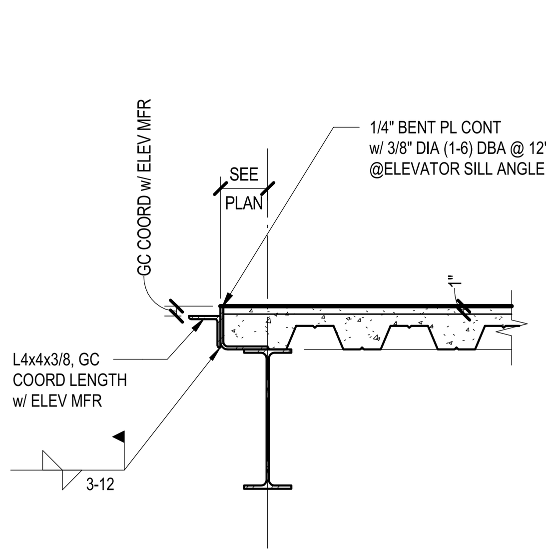

22 ELEVATOR SILL ANGLE TYPICAL DETAIL
NO SCALE

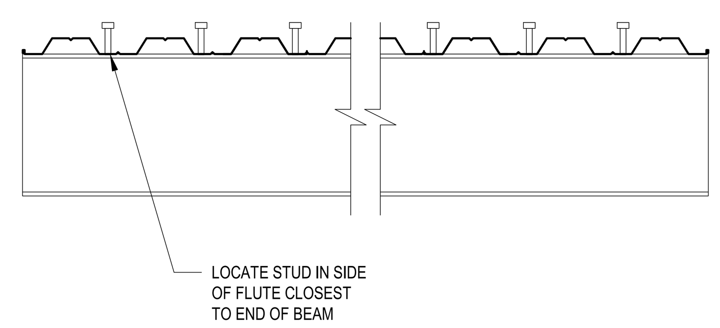

SIMPLE BEAM

1. PLACE STUDS EVENLY DISTRIBUTED ALONG LENGTH OF BEAM AT 2'-0" O.C.
2. PLACE ADDITIONAL STUDS AT 1'-0" O.C. FROM EACH END OF BEAM. USE TANDEM OR TRIPLE ROWS AS REQUIRED.
3. TOTAL NUMBER OF STUDS SHALL NOT BE LESS THAN SHOWN ON PLAN.

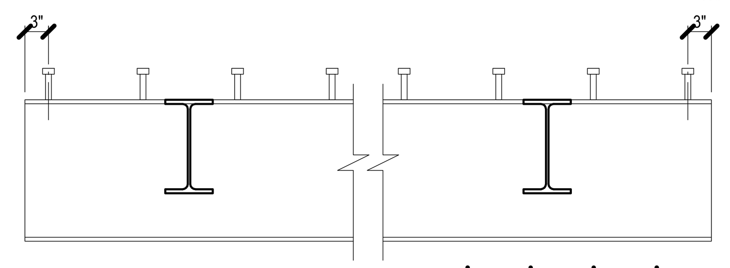

GIRDER

A. UNIFORM STUD LAYOUT. EXAMPLE
1. PLACE STUDS EVENLY DISTRIBUTED ALONG LENGTH OF BEAM AT 1'-0" O.C., STARTING AT 3" FROM EACH END OF BEAM.
2. PLACE ADDITIONAL STUDS AT 6" O.C. FROM EACH END OF BEAM. USE TANDEM OR TRIPLE ROWS AS REQUIRED.
3. TOTAL NUMBER OF STUDS SHALL NOT BE LESS THAN SHOWN ON PLAN.

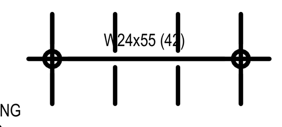

B. SEGMENTED STUD LAYOUT. EXAMPLE
1. PLACE STUDS EVENLY DISTRIBUTED ALONG LENGTH OF BEAM AT 1'-0" O.C. STARTING AT 3" FROM EACH END OF BEAM.
2. PLACE ADDITIONAL STUDS BETWEEN IN-FRAMING BEAMS TO PROVIDE FOR NUMBER OF STUDS SHOWN ON PLAN. USE TANDEM OR TRIPLE ROWS AS REQUIRED.
3. MINIMUM STUD SPACING ALONG LENGTH OF BEAM IS 6" O.C.

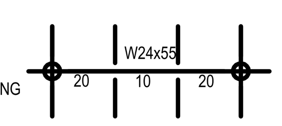

18 STUD LAYOUT - COMPOSITE BEAMS TYPICAL DETAIL
NO SCALE TD45

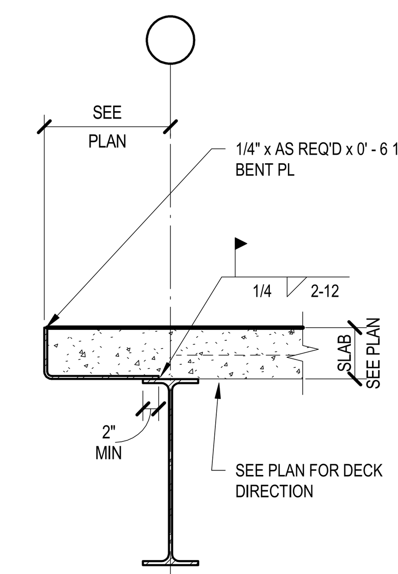

10 EXTERIOR SLAB EDGE TYPICAL DETAIL
NO SCALE STEEL - TYP PERIM

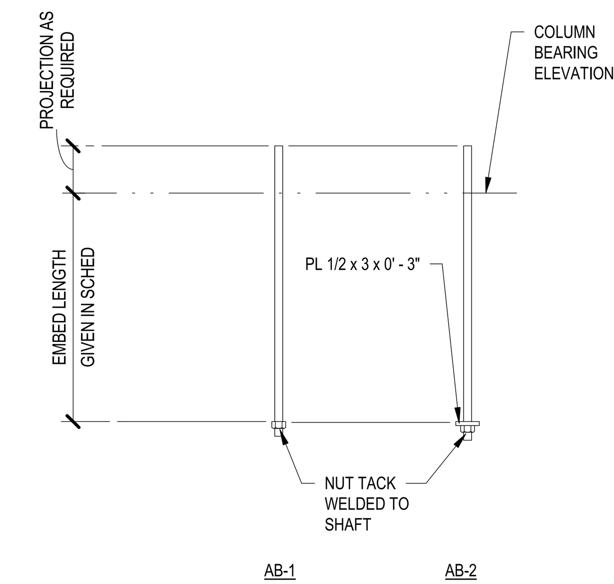

6 ANCHOR BOLT TYPES TYPICAL DETAIL
NO SCALE TD73

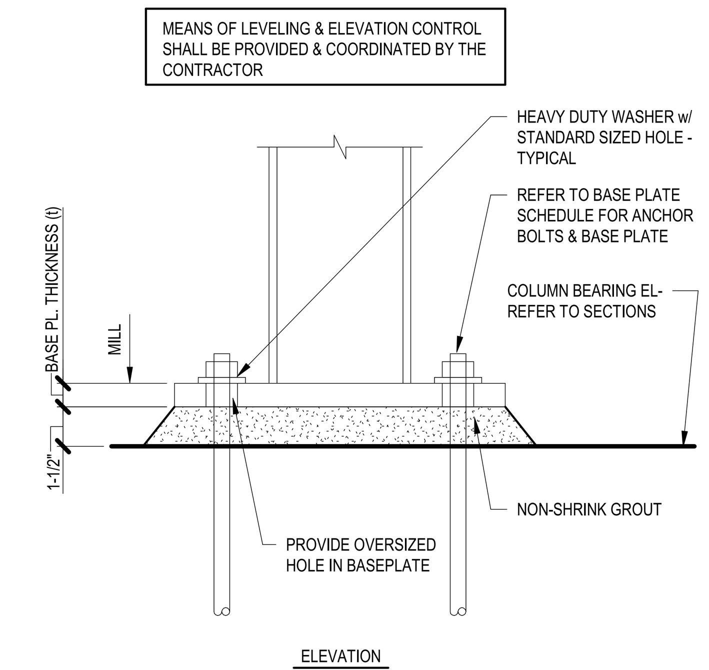

2 COLUMN BASE PLATE TYPICAL DETAIL
NO SCALE TD30

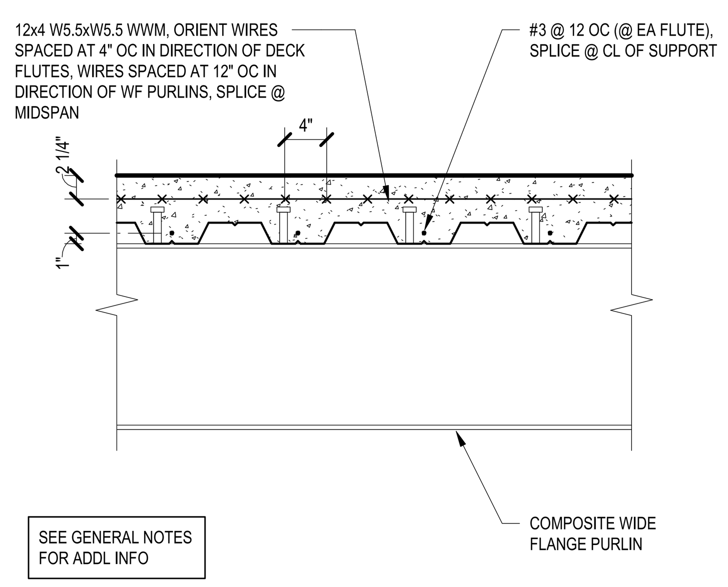

23 HEAVY STORAGE - REINF LAYOUT TYPICAL DETAIL
NO SCALE

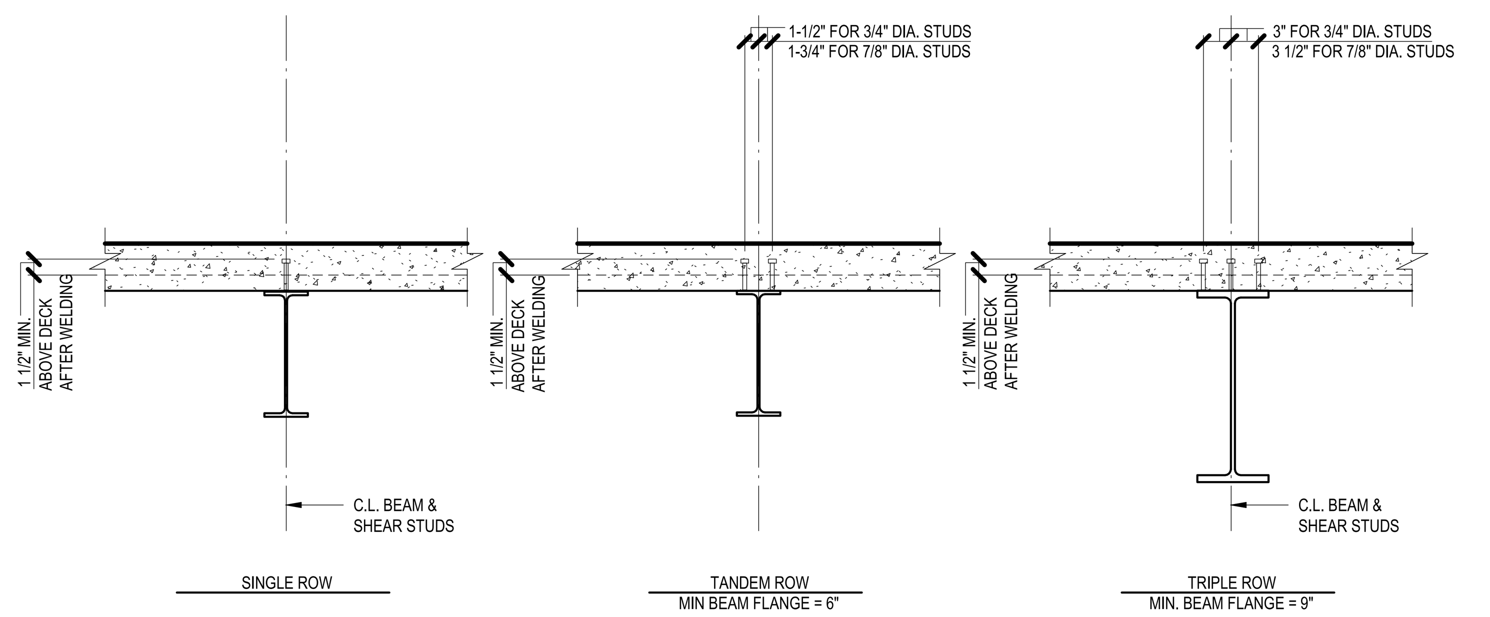

19 STUD WELDING DETAILS TYPICAL DETAIL
NO SCALE TD44

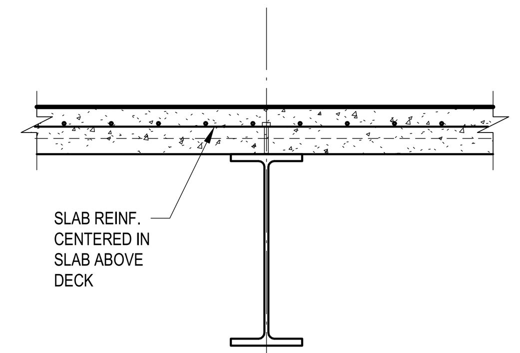

11 COMPOSITE BEAM TYPICAL DETAIL
NO SCALE TD42

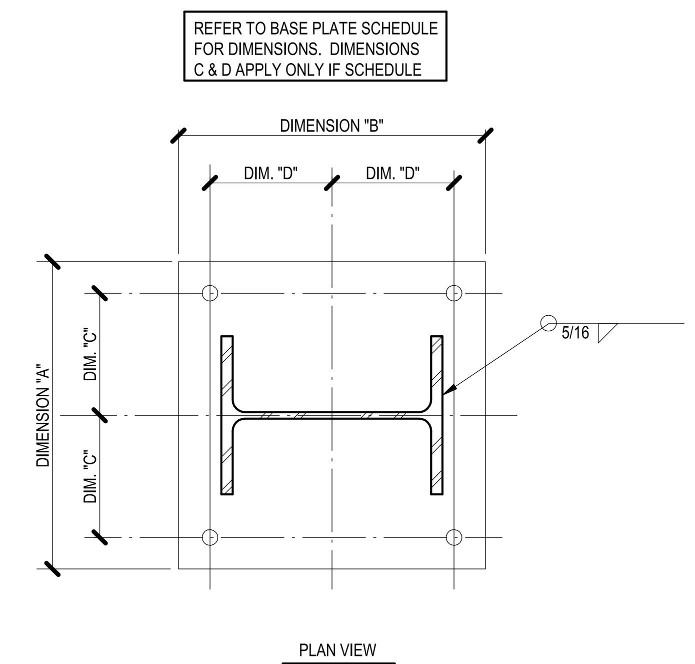

7 COLUMN BASE PLATE TYPICAL DETAIL
NO SCALE TD29

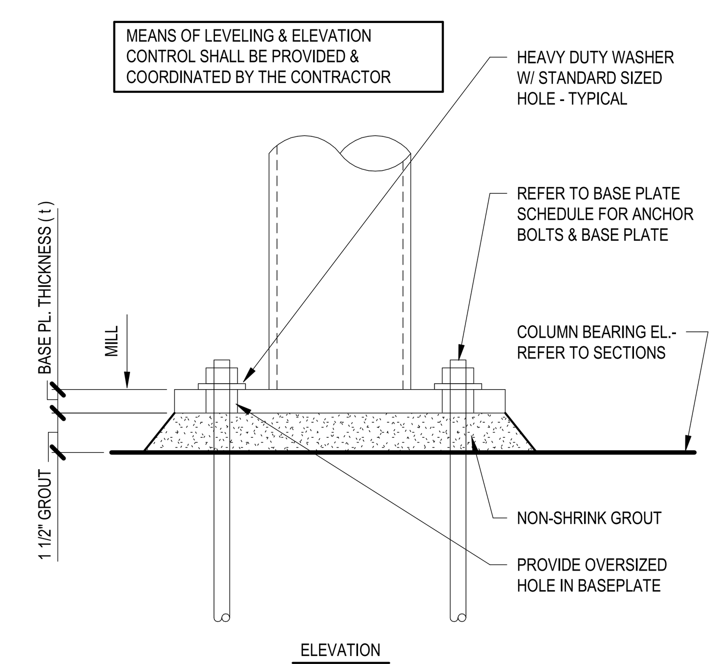

3 COLUMN BASE PLATE TYPICAL DETAIL
NO SCALE TD05121

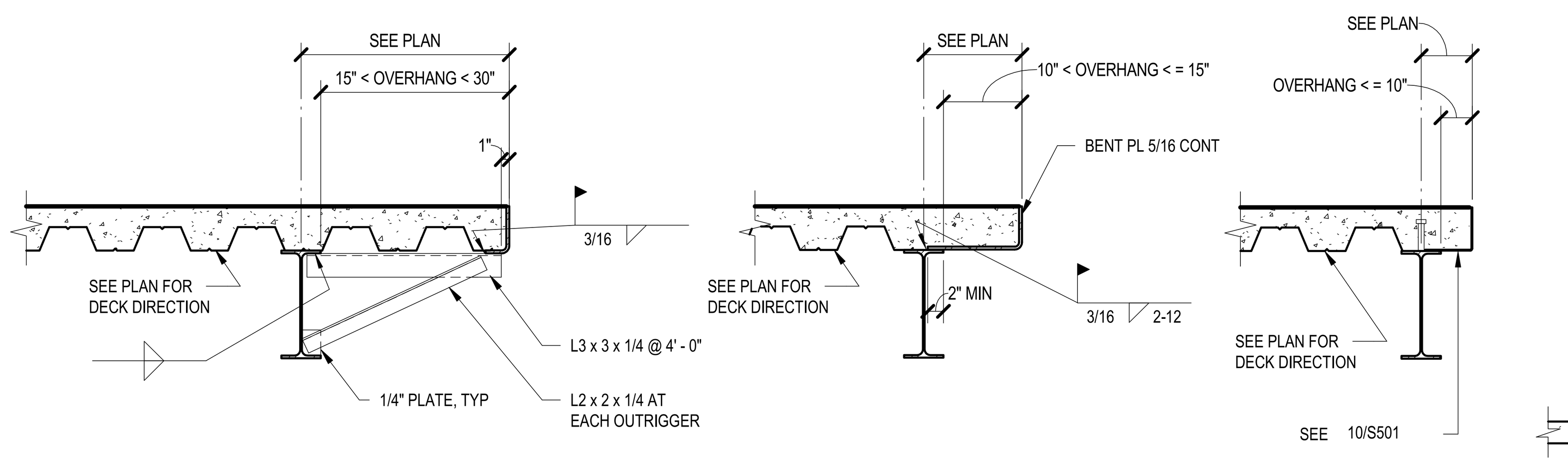

24 INTERIOR COMPOSITE SLAB EDGE TYPICAL DETAIL
NO SCALE Slab Edge - Composite Deck

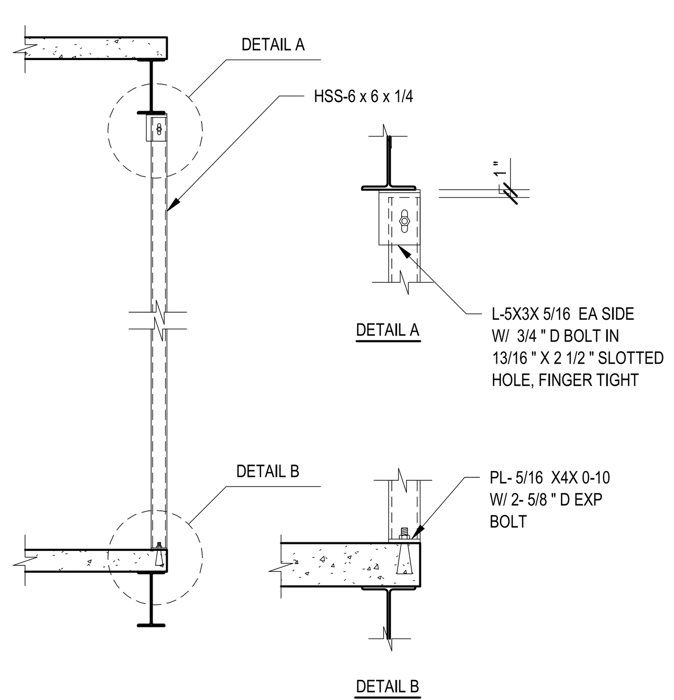

16 ELEVATOR RAIL SUPPORT TYPICAL DETAIL
NO SCALE TD70

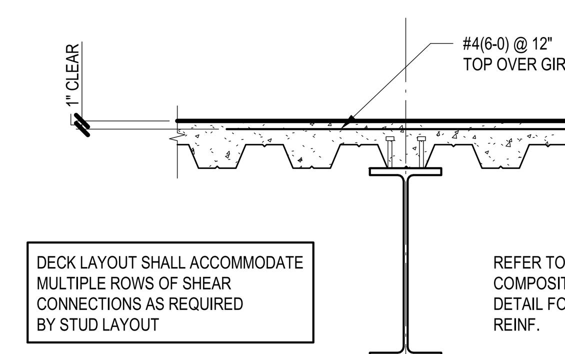

12 COMPOSITE GIRDER TYPICAL DETAIL
NO SCALE TD43

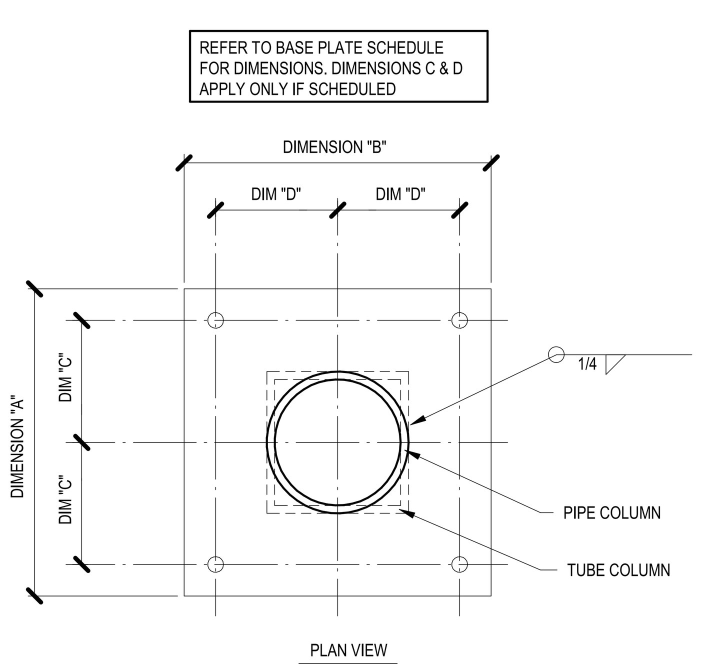

8 COLUMN BASE PLATE TYPICAL DETAIL
NO SCALE TD05120

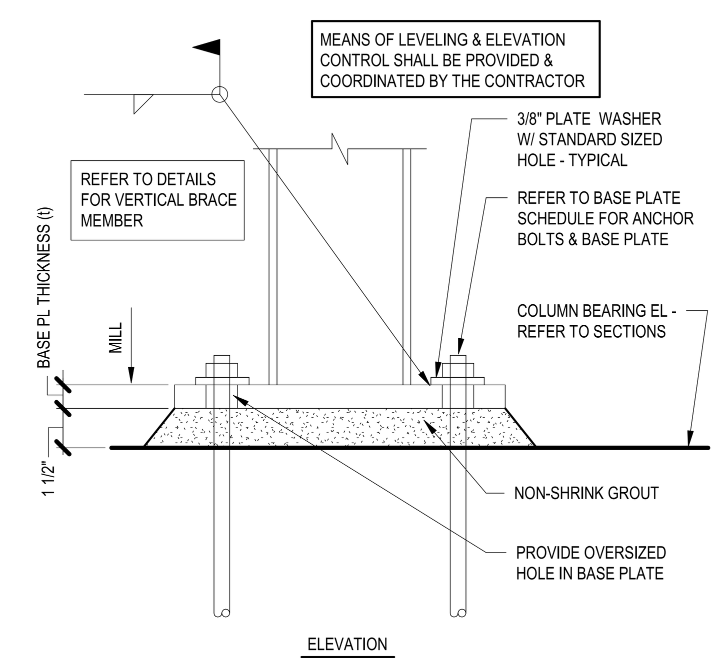

4 VERTICAL BRACE COL. BASE PLATE TYPICAL DETAIL
NO SCALE TD05112

L.A. FUESS PARTNERS, INC.
Structural Engineers
3333 Lee Parkway, Suite 300 • Dallas, TX 75219
214.871.7010 • www.lafp.com
LAFP PROJECT NO. 19100 FIRM REG. NO. F-537

Architect: Brinkley Sargent Wiginton Architects (972) 960-9970
Landscape: Kendall Landscape Architecture (214) 739-3226
Structural: L.A. Fuess Partners, Inc (214)
MEP: M-E Engineers (214) 741-1589
Civil: KSA Engineers, Inc (903) 236-7700
Technology: M-E Engineers (303) 421-6656

BRINKLEY SARGENT WIGINTON ARCHITECTS

LONGVIEW POLICE DEPARTMENT

XXXX SOUTH ST. LONGVIEW, TEXAS 75601

History		
#	Date	Description

STATE OF TEXAS
CHRISTOPHER T. MATTHEWS
105076
LICENSED PROFESSIONAL ENGINEER
8-19-2020

TYPICAL STEEL DETAILS

20513
08/19/2020
S501

BID ISSUE

8/17/2020 11:09:16 AM
C:\Temp\19100 -- LongviewPoliceBuilding-R19_jveurinkJSFLP.rvt

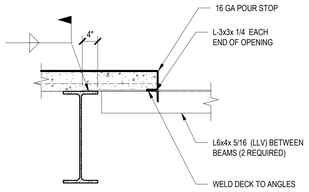

VERIFY OPENING DIMENSIONS AND CURB DETAILS PRIOR TO FABRICATION.

THIS DETAIL APPLIES ONLY TO SMALL (3'-0" SQ. OR LESS) OPENINGS THAT DO NOT SUPPORT MECHANICAL EQUIPMENT LOADS IN EXCESS OF 250 POUNDS

17 MISCELLANEOUS OPENING @ COMPOSITE SLAB TYPICAL DETAIL

NO SCALE COMPOSITE - MISC OPENING

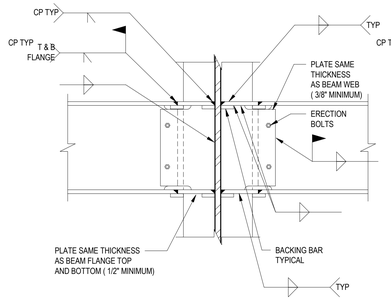

13 BEAM TO COLUMN MOMENT CONN. TYPICAL DETAIL

NO SCALE TD33

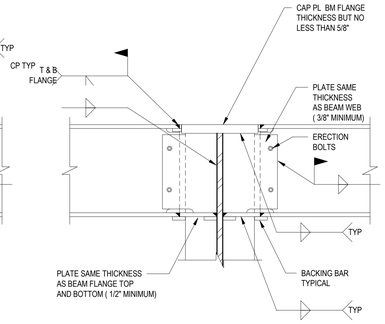

SIMPLE SHEAR CONNECTION FLOW CHART

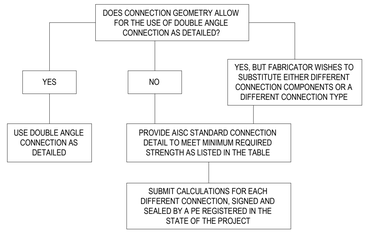

	MINIMUM CONNECTION DESIGN STRENGTH (LRFD, KIPS)	
BEAM SIZE	STANDARD	HEAVY
W8	17	N.A.
W10	21	N.A.
W12	28	38
W14	46	58
W16	50	66
W18	78	94
W21	92	130
W24	128	170
W27	150	230
W30	181	260
W33	215	300
W36	242	308
W40	278	345

NOTES:
1. EXTENDED CONNECTIONS (IN WHICH THE END OF THE SUPPORTED BEAM STOPS SHORT OF THE COLUMN OR GIRDER FLANGES) ARE NOT ALLOWED, UNLESS SPECIFICALLY DETAILED IN THE DRAWINGS.

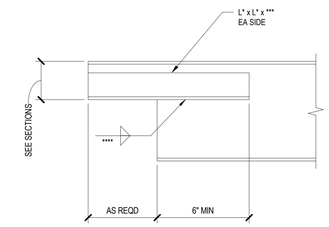

18 COPED BEAM TYPICAL DETAIL

NO SCALE TD05210

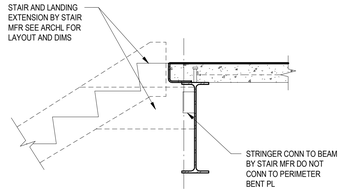

14 STAIR STRINGER CONN TYPICAL DETAIL

NO SCALE TD5660X

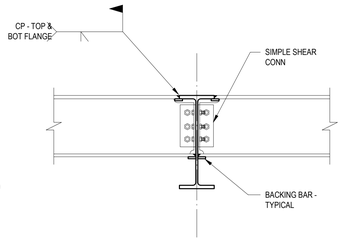

10 BEAM TO BEAM MOMENT CONN. TYPICAL DETAIL

NO SCALE TD38

NOTES:
1. WELD A IS 3/16" FOR STANDARD 1/4" FOR HEAVY.
2. BOLTS ARE ASTM A325N U.N.O.
3. BEAM CONNS ARE STANDARD UNLESS DENOTED BY AN HC ON PLAN.

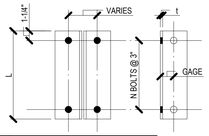

	STANDARD		HEAVY	
BEAM SIZE	ANGLE LENGTH (L)	NO. OF ROWS OF BOLTS (N)	ANGLE LENGTH (L)	NO. OF ROWS OF BOLTS (N)
W8, W10	5-1/2"	2	N.A.	N.A.
W12	5-1/2"	2	8-1/2"	3
W14, W16	8-1/2"	3	11-1/2"	4
W18	11-1/2"	4	14-1/2"	5
W21	11-1/2"	4	17-1/2"	6
W24	14-1/2"	5	20-1/2"	7
W27	14-1/2"	5	23-1/2"	8
W30	17-1/2"	6	26-1/2"	9
W33	20-1/2"	7	29-1/2"	10
W36	23-1/2"	8	29-1/2"	10
W40	26-1/2"	9	32-1/2"	11

REFER TO AISC TABLES 10-1 & 10-2.

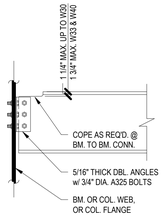

BOLTED/BOLTED CONN.

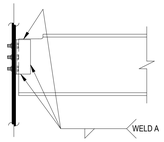

BOLTED/WELDED CONN.

6 SIMPLE SHEAR STEEL BEAM CONN. TYPICAL DETAIL

NO SCALE TD36

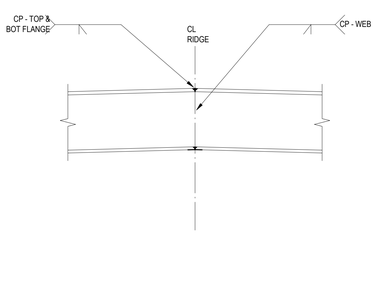

15 RIDGE BEAM SPLICE TYPICAL DETAIL

NO SCALE RIDGE BEAM SPLICE

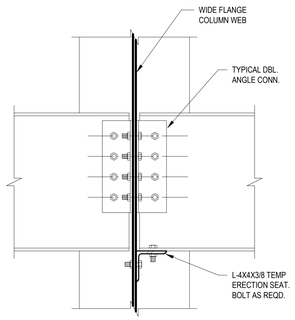

11 DOUBLE BEAM CONN. TO COL. WEB TYPICAL DETAIL

NO SCALE TD37

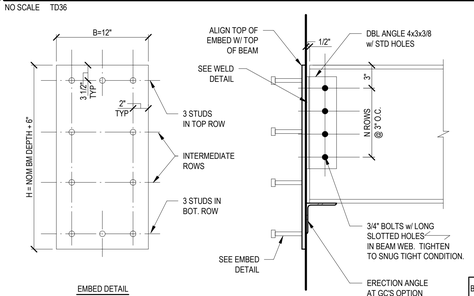

EMBED DETAIL

DBL ANGLE WELD DETAIL

SEE TYPICAL DOUBLE ANGLE STEEL BEAM CONN DETAIL FOR ANGLE LENGTH AND NUMBER OF BOLTS

		HEADED STUDS			
BEAM SIZE	PLATE T	DIA	LENGTH	NO. OF INT ROWS	TOTAL NO. OF STUDS
W8-W10	3/8"	1/2"	6"	0	6
W12-W16	3/8"	1/2"	6"	1	8
W18-W21	1/2"	3/4"	6"	2	10
W24-W30	1/2"	3/4"	6"	3	12
W33	3/4"	3/4"	6"	4	14
W36	3/4"	3/4"	6"	5	16
W40	3/4"	3/4"	6"	5	16

7 STEEL BEAM TO CONCRETE CONN. TYPICAL DETAIL

NO SCALE TD05205

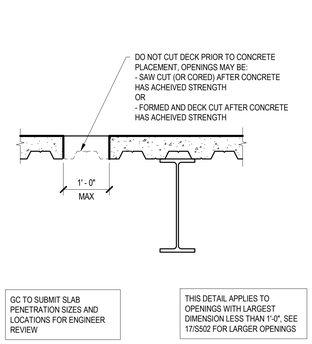

GC TO SUBMIT SLAB PENETRATION SIZES AND LOCATIONS FOR ENGINEER REVIEW

THIS DETAIL APPLIES TO OPENINGS WITH LARGEST DIMENSION LESS THAN 1'-0". SEE 17/S502 FOR LARGER OPENINGS

16 COMPOSITE SLAB OPENING TYPICAL DETAIL

NO SCALE COMPOSITE - SLAB OPENING

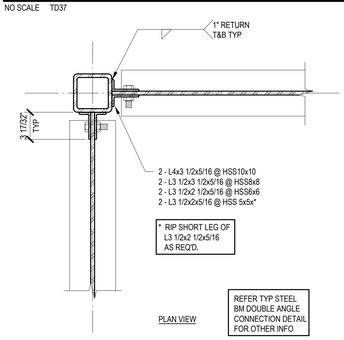

PLAN VIEW

REFER TYP STEEL BM DOUBLE ANGLE CONNECTION DETAIL FOR OTHER INFO

12 BEAM TO HSS COLUMN CONN TYPICAL DETAIL

NO SCALE TD05208

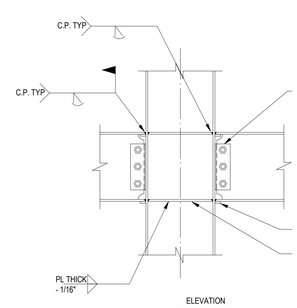

ELEVATION

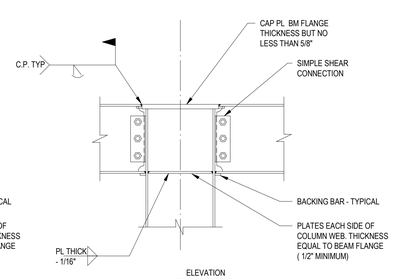

ELEVATION

8 BEAM TO COLUMN MOMENT CONN. TYPICAL DETAIL

NO SCALE TD32

L.A. FUESS PARTNERS, INC.
Structural Engineers
3333 Lee Parkway, Suite 300 • Dallas, TX 75219
214.871.7030 • www.lafp.com
LAFP PROJECT NO. 19100 FIRM REG. NO. F-537

BRINKLEY SARGENT WIGGINTON ARCHITECTS
Architect: Brinkley Sargent Wigginton Architects (972) 960-9970
Landscape: Kendall Landscape Architecture (214) 739-3226
Structural: L.A. Fuess Partners, Inc (214)
MEP: M-E Engineers (214) 741-1589
Civil: KSA Engineers, Inc (903) 236-7700
Technology: M-E Engineers (303) 421-6656

LONGVIEW POLICE DEPARTMENT

XXXX SOUTH ST. LONGVIEW, TEXAS 75601

History

#	Date	Description

STATE OF TEXAS
CHRISTOPHER T. MATTHEWS
105076
LICENSED PROFESSIONAL ENGINEER
8-19-2020

TYPICAL STEEL DETAILS

BID ISSUE

20513
08/19/2020
S502

E:\Temp\19100 - Longview Police Building - R13_revit mp2019.rvt
8/17/2020 11:09:19 AM

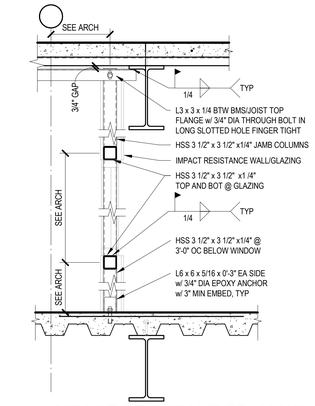

21 IMPACT RESISTANT FRAMING TYPICAL DETAIL

NO SCALE IMPACT RATED WALL

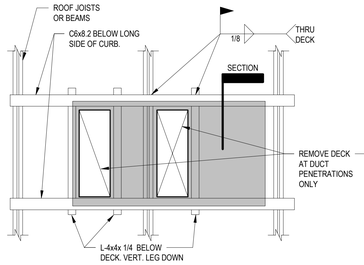

RTU-PLAN VIEW

PERPENDICULAR TO JOISTS

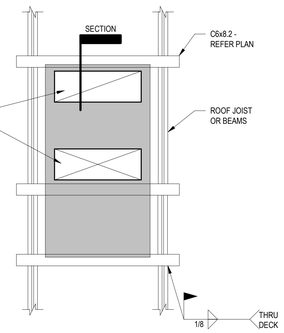

RTU-PLAN VIEW

PARALLEL TO JOISTS

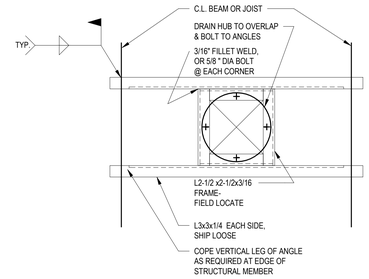

PLAN VIEW

CONTRACTOR TO COORDINATE FRAME SIZES REQUIRED FOR DRAIN HUBS

9 ROOF DRAIN SUPPORT FRAME TYPICAL DETAIL

NO SCALE TD69

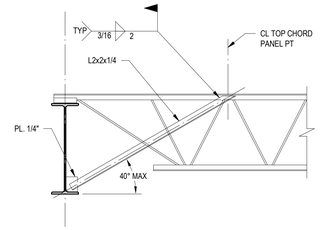

5 BOTTOM FLANGE BRACE TYPICAL DETAIL

NO SCALE TD05181

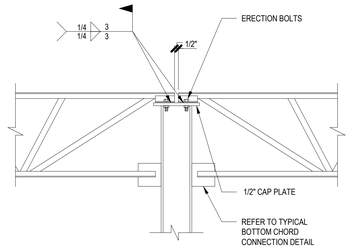

1 JOIST CONNECTION TYPICAL DETAIL

NO SCALE TD46

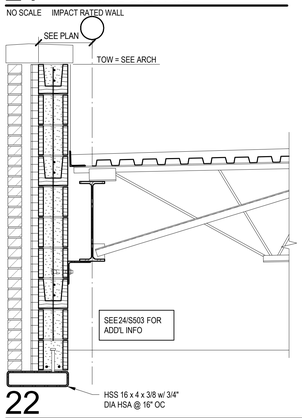

22

3/4" = 1'-0"

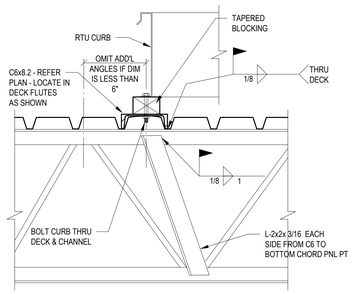

SECTION

MECHANICAL UNIT SUPPORT NOTES:

1. INSTALL C6X8.2'S FROM TOP SIDE, AFTER DECK PLACEMENT. LOCATE IN DECK FLUTES ADJUSTING SPACING IN 6" INCREMENTS TO SUPPORT LONG SIDE OF CURB.
2. POSITION CURB OVER CHANNELS AND LOCATE REQ'D DUCT PENETRATIONS THRU ROOF. REFER TO MECHL DRWGS FOR EXACT SIZES.
3. POSITION ANGLES BELOW DECK AND WELD TO CHANNELS THRU DECK FROM TOP SIDE. OMIT CROSS ANGLES IF EDGE OF PENETRATION IS WITHIN 6" OF A JOIST.
4. CUT ROOF DECK ONLY AS REQUIRED FOR DUCT PENETRATION.

18 MECHANICAL UNIT SUPPORT TYPICAL DETAIL

NO SCALE TD71

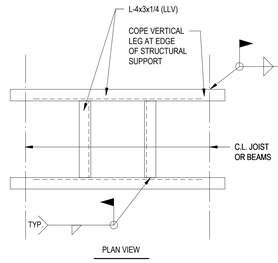

PLAN VIEW

10 ROOF SCUTTLE FRAME TYPICAL DETAIL

NO SCALE

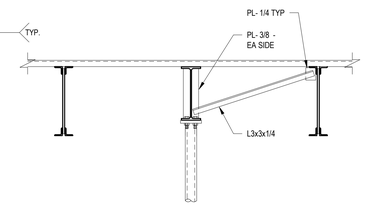

6 TOP OF COLUMN BRACING TYPICAL DETAIL

NO SCALE TD34

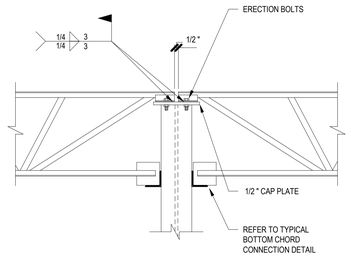

2 JOIST CONNECTION TYPICAL DETAIL

NO SCALE TD47

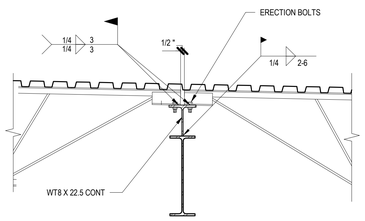

23

3/4" = 1'-0"

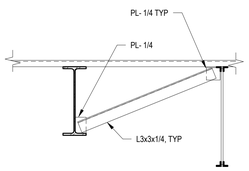

19

3/4" = 1'-0"

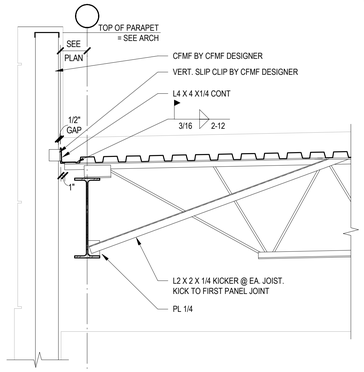

15

3/4" = 1'-0"

NOTE:
DECK WELDS TO TUBE ARE CRITICAL, GC COORDINATE DECK LAYOUT SUCH THAT FLUTES ALIGN WITH TUBE

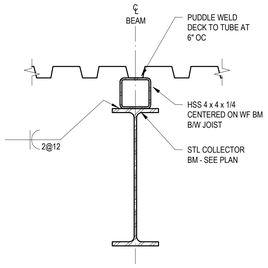

11 TYPICAL DETAIL

NO SCALE STEEL - 4" TUBE ON COLLECTORS

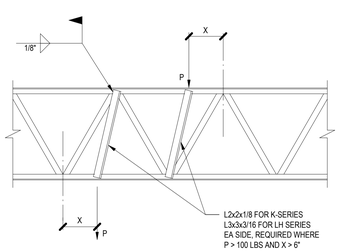

7 CONCENTRATED LOAD ON STL. JST. TYPICAL DETAIL

NO SCALE TD05489

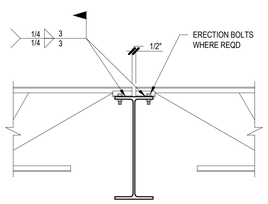

3 JOIST CONNECTION TYPICAL DETAIL

NO SCALE TD55

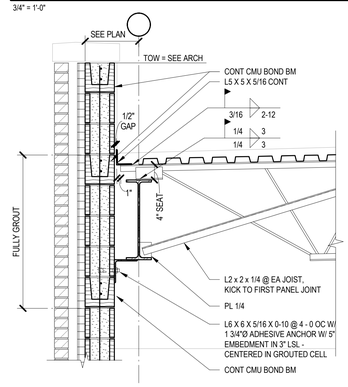

24

3/4" = 1'-0"

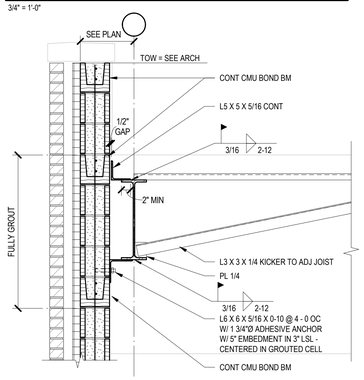

20

3/4" = 1'-0"

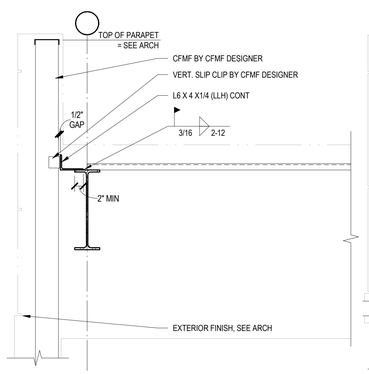

16

3/4" = 1'-0"

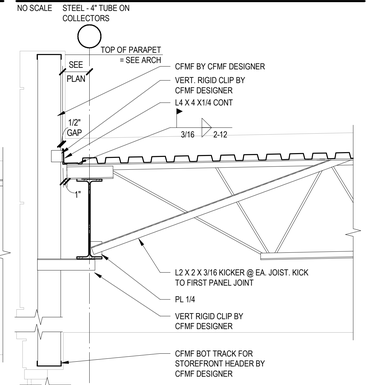

12

3/4" = 1'-0"

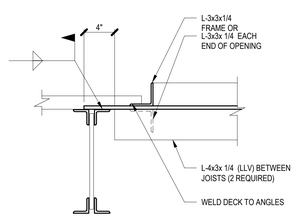

VERIFY OPENING DIMENSIONS AND CURB DETAILS PRIOR TO FABRICATION.

THIS DETAIL APPLIES ONLY TO SMALL (3'-0" SQ. OR LESS) OPENINGS THAT DO NOT SUPPORT MECHANICAL EQUIPMENT LOADS IN EXCESS OF 250 POUNDS

8 MISCELLANEOUS ROOF OPENING TYPICAL DETAIL

NO SCALE TD58

DO NOT WELD BOTTOM CHORD UNLESS NOTED OTHERWISE

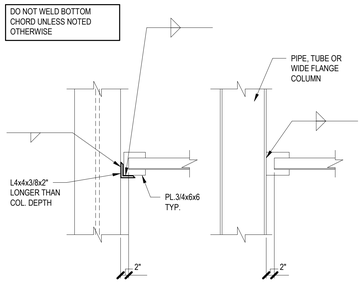

4 BOTTOM CHORD CONNECTION TYPICAL DETAIL

NO SCALE TD54

L.A. FUESS PARTNERS, INC.
Structural Engineers
3333 Lee Parkway, Suite 300 • Dallas, TX 75219
214.871.7010 • www.lafp.com
LAFP PROJECT NO. 19100 FIRM REG. NO. F-537

Architect: Brinkley Sargent Wigginton Architects (972) 960-9970
Landscape: Kendall Landscape Architecture (214) 739-3226
Structural: L.A. Fuess Partners, Inc (214)
MEP: M-E Engineers (214) 741-1589
Civil: KSA Engineers, Inc (903) 236-7700
Technology: M-E Engineers (303) 421-6656

BRINKLEY SARGENT WIGGINTON ARCHITECTS

LONGVIEW POLICE DEPARTMENT

XXXX SOUTH ST. LONGVIEW, TEXAS 75601

History

#	Date	Description

STATE OF TEXAS
CHRISTOPHER T. MATTHEWS
105076
LICENSED PROFESSIONAL ENGINEER
8-19-2020

TYPICAL STEEL DETAILS

BID ISSUE

20513
08/19/2020
S503

C:\Temp\19100 - LongviewPoliceBuilding-R19_jmeurman5910.rvt
8/17/2020 11:09:23 AM

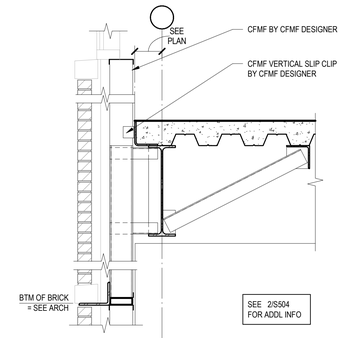

21
3/4" = 1'-0"

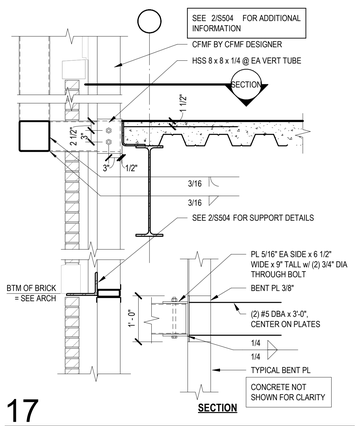

17
3/4" = 1'-0"

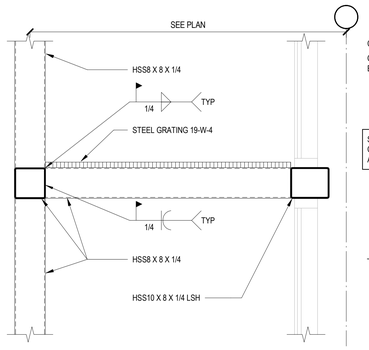

13
3/4" = 1'-0"

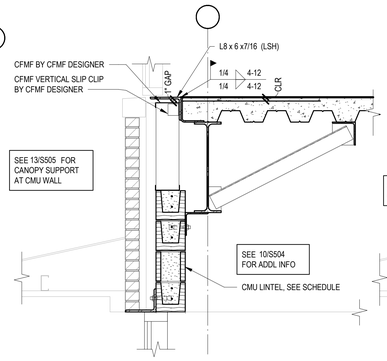

9
3/4" = 1'-0"

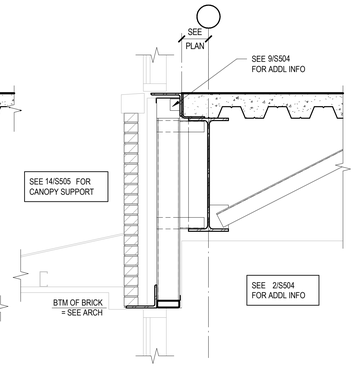

5
3/4" = 1'-0"

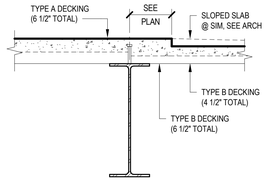

1
3/4" = 1'-0"

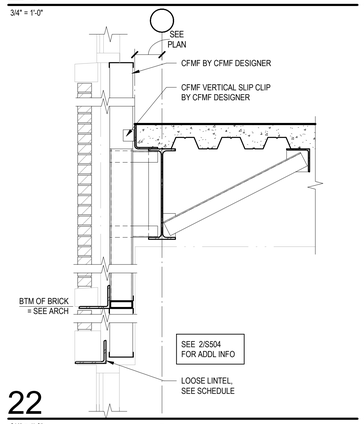

22
3/4" = 1'-0"

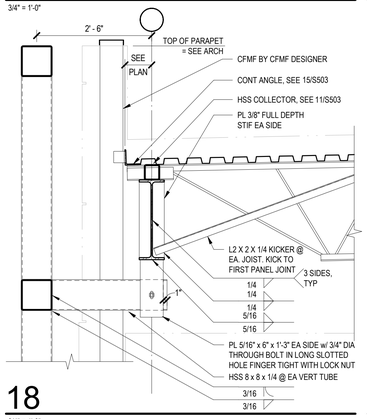

18
3/4" = 1'-0"

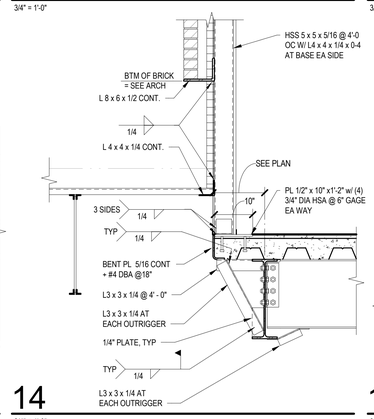

14
3/4" = 1'-0"

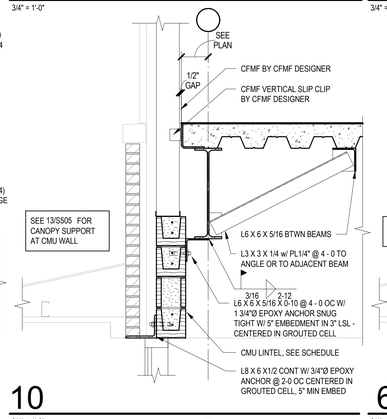

10
3/4" = 1'-0"

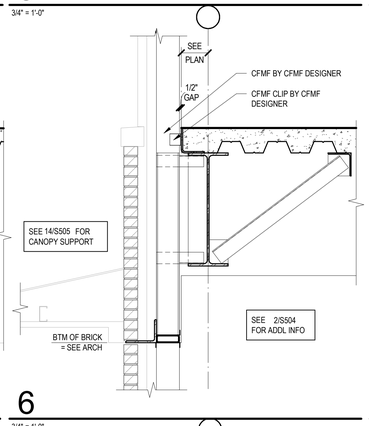

6
3/4" = 1'-0"

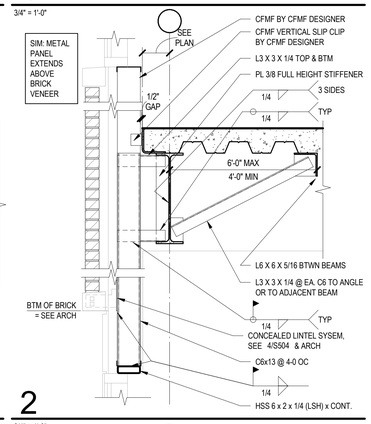

2
3/4" = 1'-0"

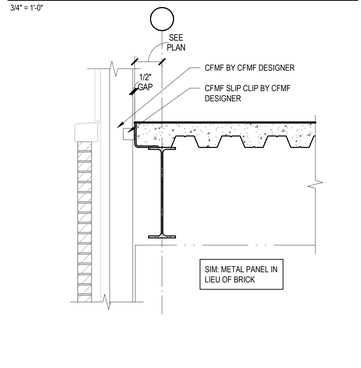

23
3/4" = 1'-0"

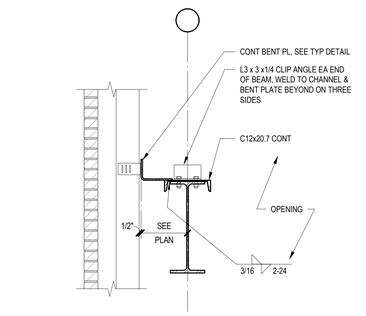

19
3/4" = 1'-0"

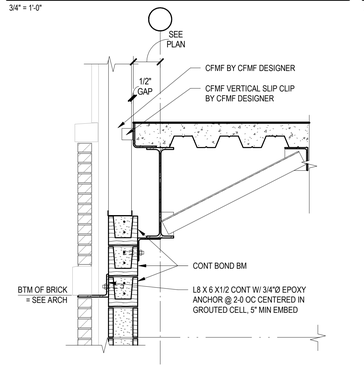

15
3/4" = 1'-0"

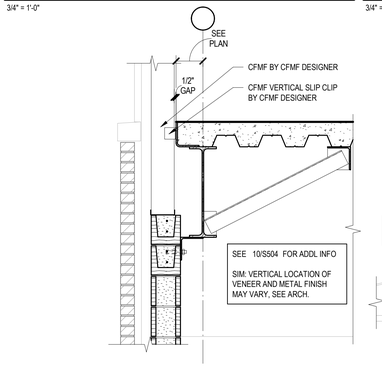

11
3/4" = 1'-0"

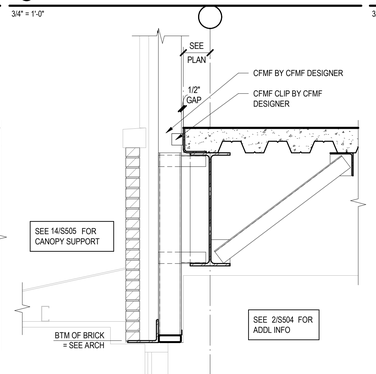

7
3/4" = 1'-0"

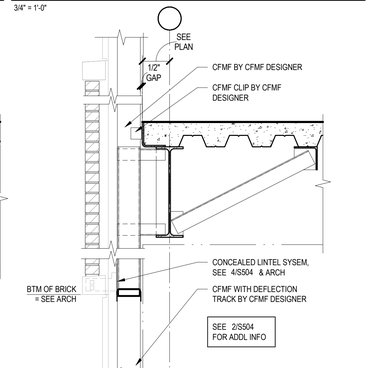

3
3/4" = 1'-0"

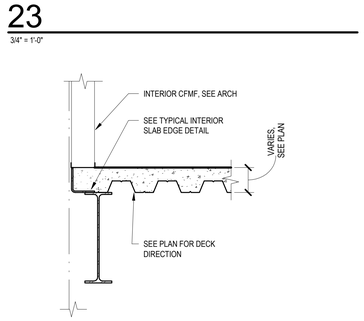

24
3/4" = 1'-0"

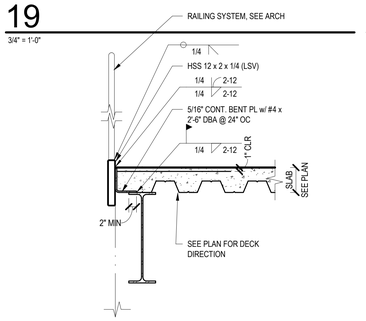

20
3/4" = 1'-0"

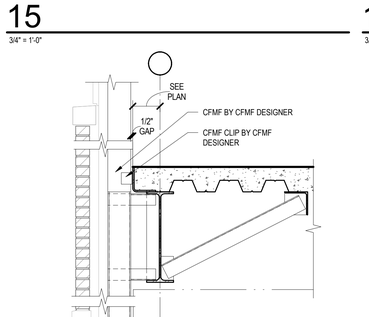

16
3/4" = 1'-0"

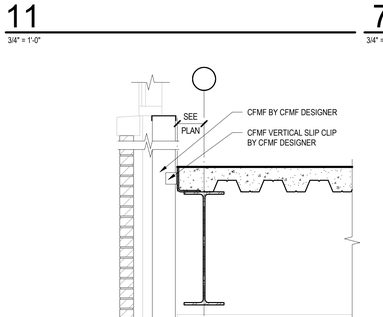

12
3/4" = 1'-0"

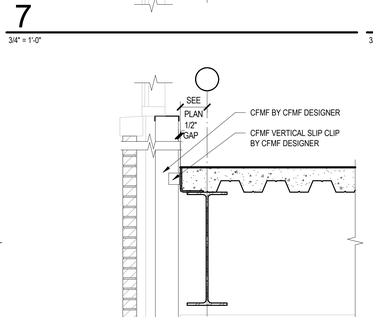

8
3/4" = 1'-0"

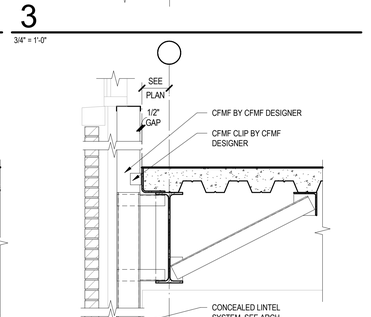

4
3/4" = 1'-0"

Architect: Brinkley Sargent Wigginton Architects (972) 960-9970
Landscape: Kendall Landscape Architecture (214) 739-3226
Structural: L.A. Fuess Partners, Inc (214)
MEP: M-E Engineers (214) 741-1589
Civil: KSA Engineers, Inc (903) 236-7700
Technology: M-E Engineers (303) 421-6656

BRINKLEY SARGENT WIGINTON ARCHITECTS

LONGVIEW POLICE DEPARTMENT

XXXX SOUTH ST. LONGVIEW, TEXAS 75601

History		
#	Date	Description

STATE OF TEXAS
CHRISTOPHER T. MATTHEWS
105076
LICENSED PROFESSIONAL ENGINEER
8-19-2020

STEEL DETAILS

BID ISSUE

L.A. FUESS PARTNERS, INC.
Structural Engineers
3333 Lee Parkway, Suite 300 • Dallas, TX 75219
214.871.7030 • www.lafp.com
LAFP PROJECT NO. 19100 FIRM REG. NO. F-537

20513
08/19/2020
S504

8/17/2020 11:09:28 AM
C:\Temp\19100 - LongviewPoliceDepartment_revit2019_central2019.rvt

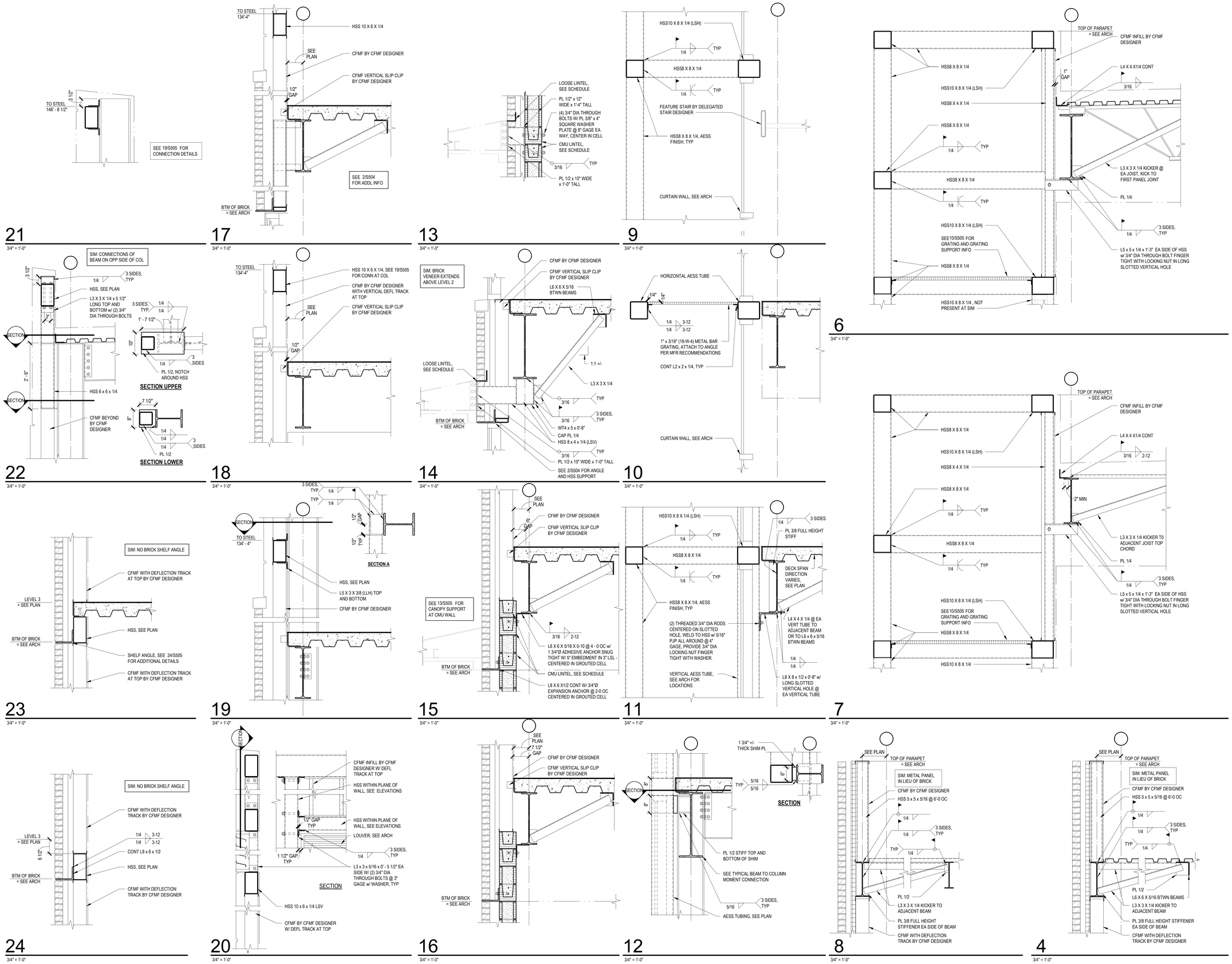

L.A. FUESS PARTNERS, INC.
Structural Engineers
3333 Lee Parkway, Suite 300 • Dallas, TX 75219
214.871.7030 • www.lafp.com
LAFP PROJECT NO. 19100 FIRM REG. NO. F-537

BRINKLEY SARGENT WIGGINTON ARCHITECTS

Architect: Brinkley Sargent Wigginton Architects (972) 960-9970
Landscape: Kendall Landscape Architecture (214) 739-3226
Structural: L.A. Fuess Partners, Inc (214)
MEP: M-E Engineers (214) 741-1589
Civil: KSA Engineers, Inc (903) 236-7700
Technology: M-E Engineers (303) 421-6656

LONGVIEW POLICE DEPARTMENT

XXXX SOUTH ST. LONGVIEW, TEXAS 75601

History		
#	Date	Description

STATE OF TEXAS
CHRISTOPHER T. MATTHEWS
105076
LICENSED PROFESSIONAL ENGINEER
8-19-2020

STEEL DETAILS

BID ISSUE

20513
08/19/2020
S505

8/17/2020 11:09:33 AM
C:\Temp\19100 - LongviewPoliceDepartment19_revarch2013.rvt

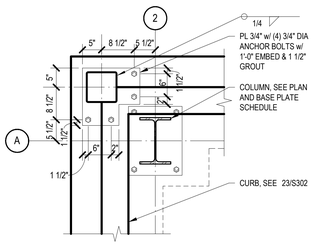

21
3/4" = 1'-0"

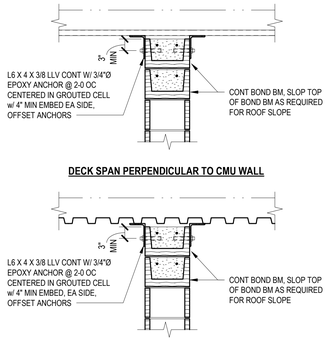

17
3/4" = 1'-0"

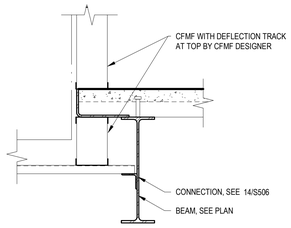

13
1" = 1'-0"

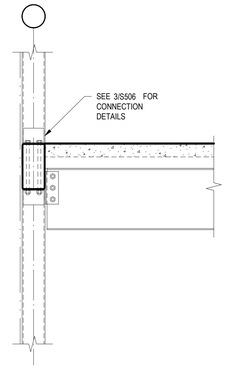

9
3/4" = 1'-0"

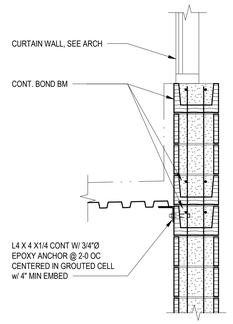

5
3/4" = 1'-0"

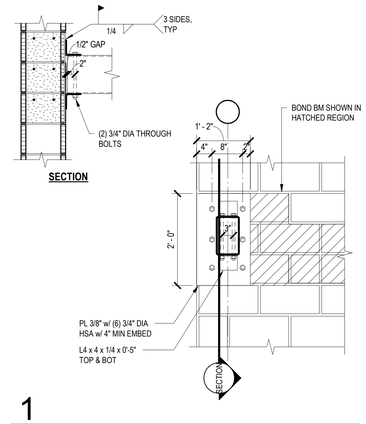

1
3/4" = 1'-0"

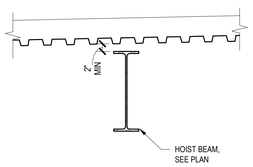

22
3/4" = 1'-0"

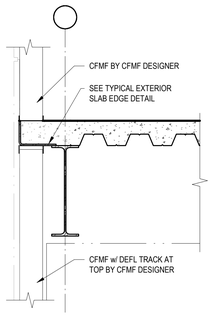

18
3/4" = 1'-0"

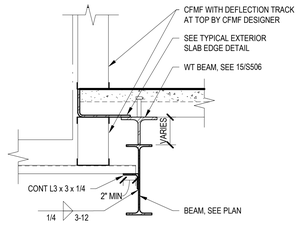

14
1" = 1'-0"

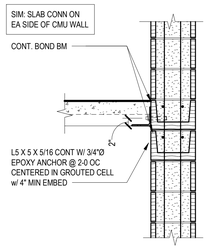

10
3/4" = 1'-0"

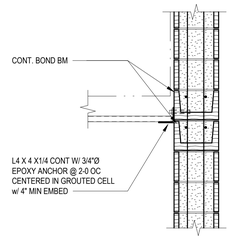

6
3/4" = 1'-0"

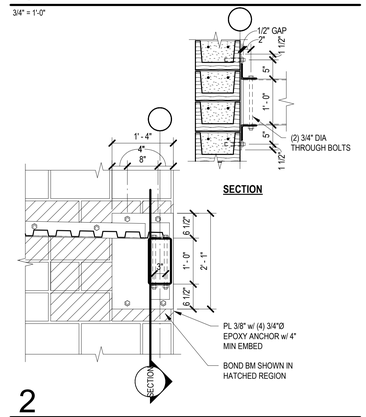

2
3/4" = 1'-0"

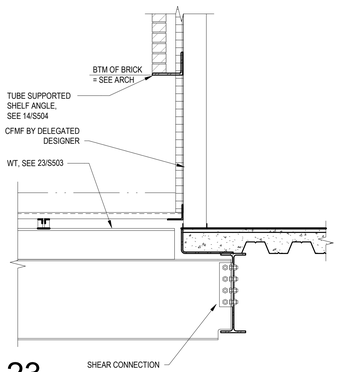

23
3/4" = 1'-0"

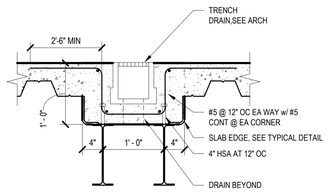

19
1" = 1'-0"

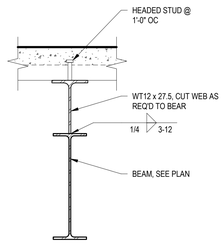

15
1" = 1'-0"

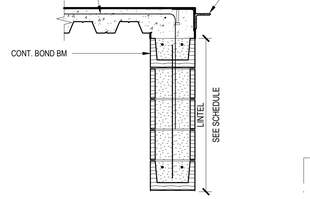

11
3/4" = 1'-0"

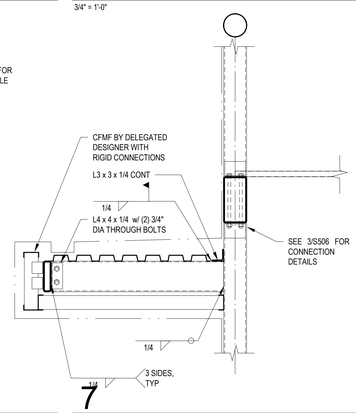

7
3/4" = 1'-0"

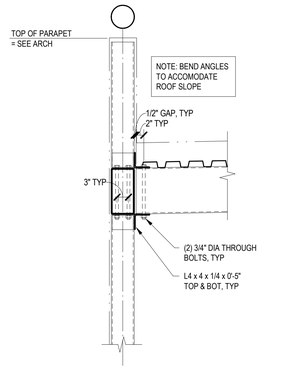

3
3/4" = 1'-0"

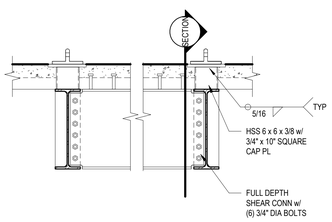

20
3/4" = 1'-0"

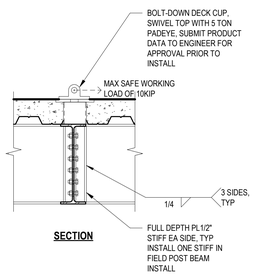

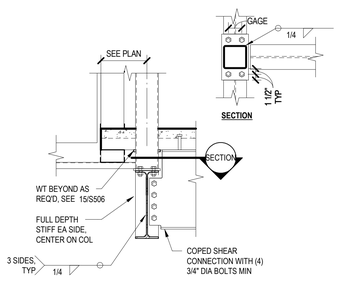

16
3/4" = 1'-0"

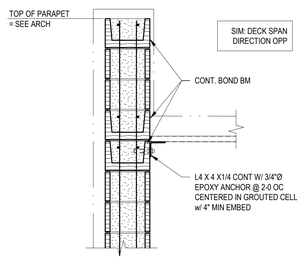

12
3/4" = 1'-0"

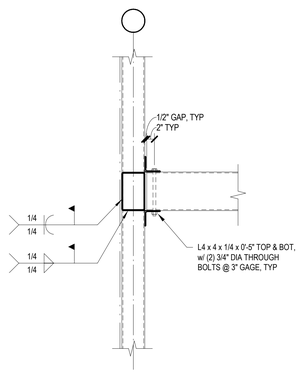

8
3/4" = 1'-0"

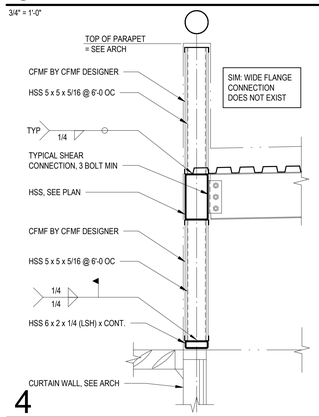

4
3/4" = 1'-0"

L.A. FUESS PARTNERS, INC.
Structural Engineers
3333 Lee Parkway, Suite 300 • Dallas, TX 75219
214.871.7030 • www.lafp.com
LAFP PROJECT NO. 19100 FIRM REG. NO. F-537

BRINKLEY SARGENT WIGINTON ARCHITECTS

Architect: Brinkley Sargent Wigginton Architects (972) 960-9970
Landscape: Kendall Landscape Architecture (214) 739-3226
Structural: L.A. Fuess Partners, Inc (214)
MEP: M-E Engineers (214) 741-1589
Civil: KSA Engineers, Inc (903) 236-7700
Technology: M-E Engineers (303) 421-6656

LONGVIEW POLICE DEPARTMENT

XXXX SOUTH ST. LONGVIEW, TEXAS 75601

History

#	Date	Description

STATE OF TEXAS
CHRISTOPHER T. MATTHEWS
105076
LICENSED PROFESSIONAL ENGINEER
8-19-2020

STEEL DETAILS

20513
08/19/2020
S506

BID ISSUE

8/17/2020 11:09:36 AM
C:\Temp\19100 - LongviewPoliceDepartment-R19_revcentral2013P.rvt

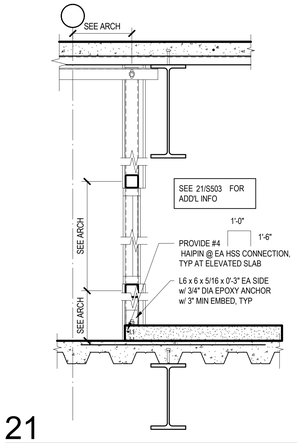

21
3/4" = 1'-0"

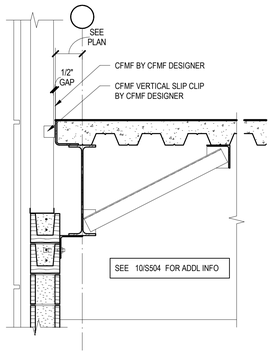

17
3/4" = 1'-0"

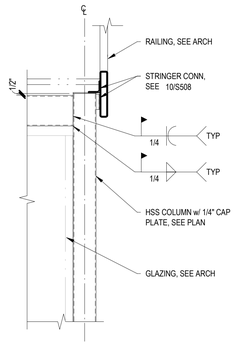

13
3/4" = 1'-0"

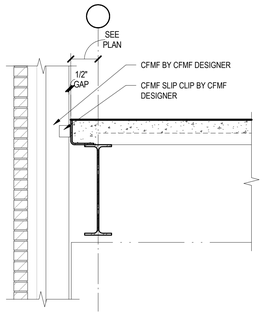

9
3/4" = 1'-0"

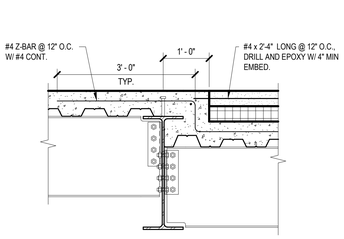

5
3/4" = 1'-0"

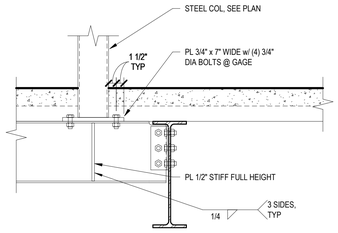

1
1" = 1'-0"

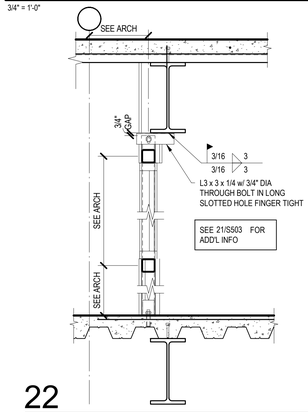

22
3/4" = 1'-0"

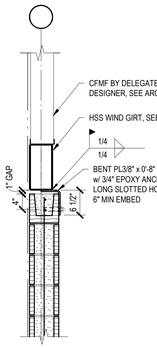

18
3/4" = 1'-0"

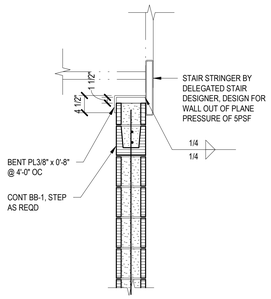

14
3/4" = 1'-0"

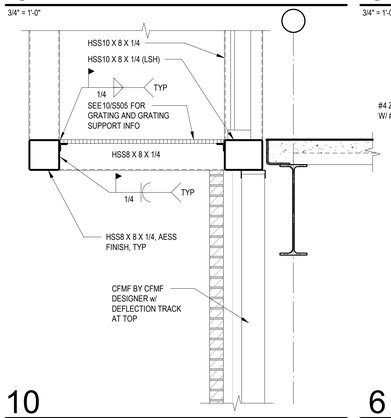

10
3/4" = 1'-0"

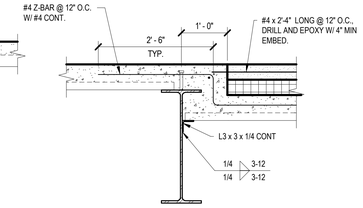

6
3/4" = 1'-0"

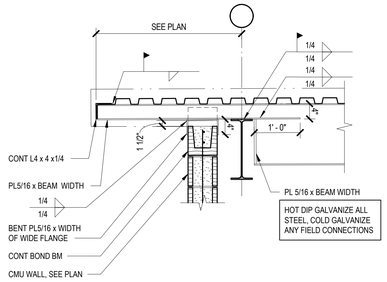

2
3/4" = 1'-0"

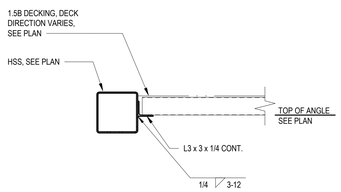

23
1" = 1'-0"

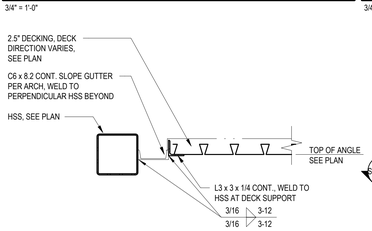

19
1" = 1'-0"

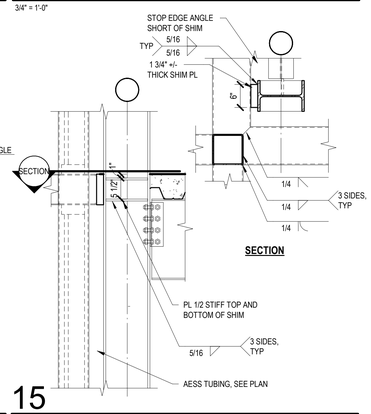

15
3/4" = 1'-0"

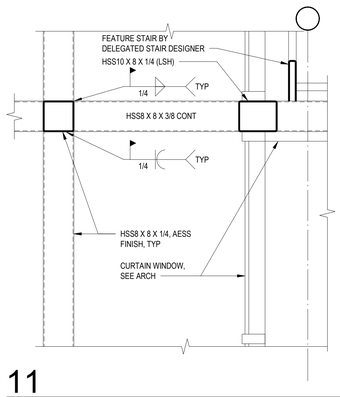

11
3/4" = 1'-0"

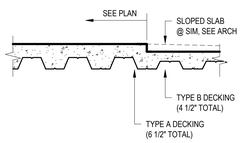

7
3/4" = 1'-0"

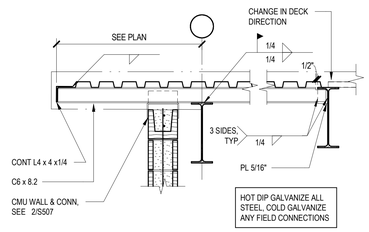

3
3/4" = 1'-0"

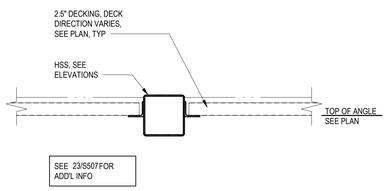

24
1" = 1'-0"

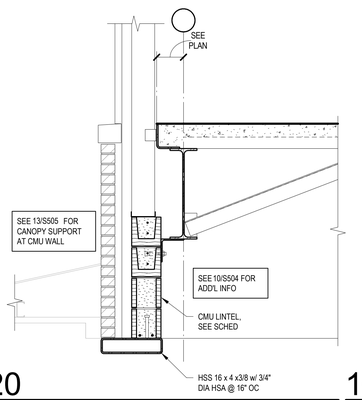

20
3/4" = 1'-0"

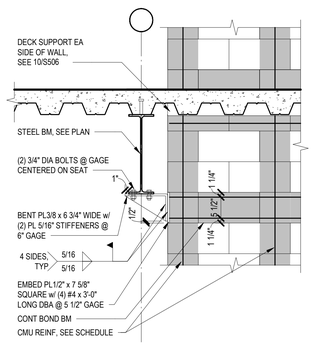

16
3/4" = 1'-0"

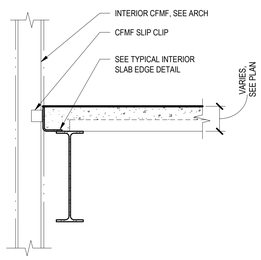

12
3/4" = 1'-0"

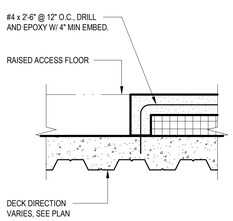

8
1" = 1'-0"

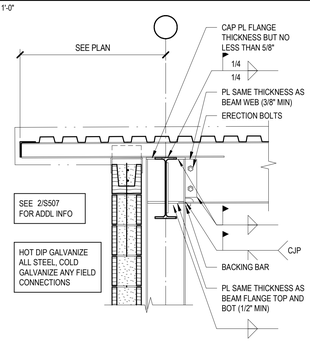

4
3/4" = 1'-0"

L.A. FUESS PARTNERS, INC.
Structural Engineers
3333 Lee Parkway, Suite 300 • Dallas, TX 75219
214.871.7030 • www.lafp.com
LAFP PROJECT NO. 19100 FIRM REG. NO. F-537

BRINKLEY SARGENT WIGINTON ARCHITECTS

Architect: Brinkley Sargent Wigginton Architects (972) 960-9970
Landscape: Kendall Landscape Architecture (214) 739-3226
Structural: L.A. Fuess Partners, Inc (214)
MEP: M-E Engineers (214) 741-1589
Civil: KSA Engineers, Inc (903) 236-7700
Technology: M-E Engineers (303) 421-6636

LONGVIEW POLICE DEPARTMENT

XXXX SOUTH ST. LONGVIEW, TEXAS 75601

History		
#	Date	Description

STATE OF TEXAS
CHRISTOPHER T. MATTHEWS
105076
LICENSED PROFESSIONAL ENGINEER
8-19-2020

STEEL DETAILS

BID ISSUE

20513
08/19/2020
S507

8/17/2020 11:09:41 AM

C:\Temp\19100 - Longview Police Building-R19_revvmc4293.rvt

Brinkley Sargent Wigginton Architects, Inc.

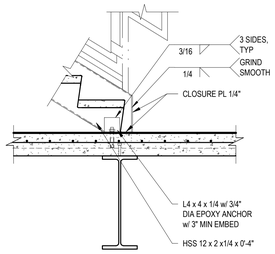

13
3/4" = 1'-0"

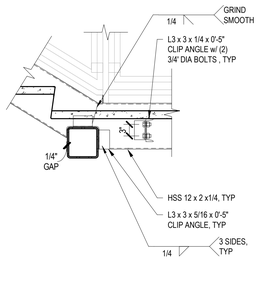

9
3/4" = 1'-0"

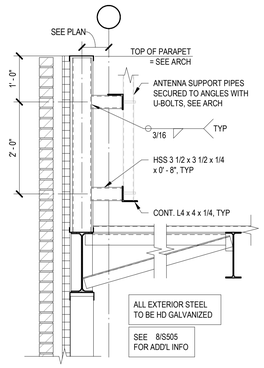

5
3/4" = 1'-0"

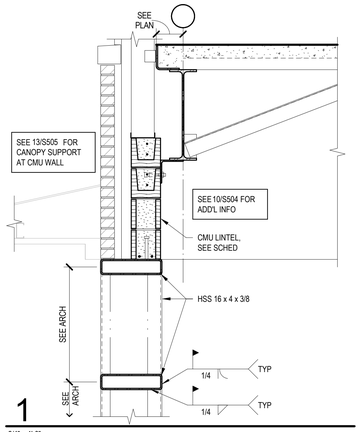

1
3/4" = 1'-0"

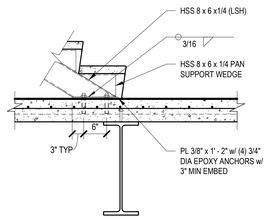

14
3/4" = 1'-0"

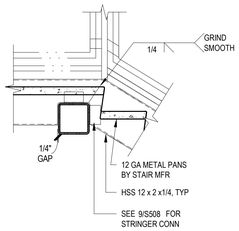

10
3/4" = 1'-0"

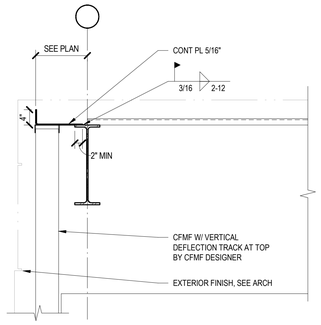

6
3/4" = 1'-0"

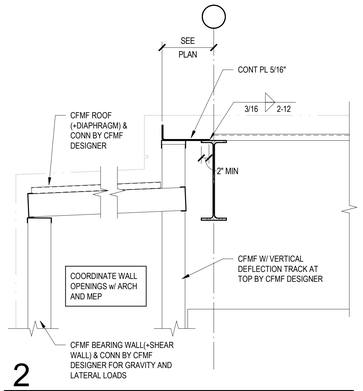

2
3/4" = 1'-0"

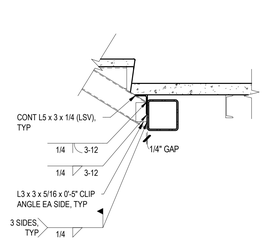

11
3/4" = 1'-0"

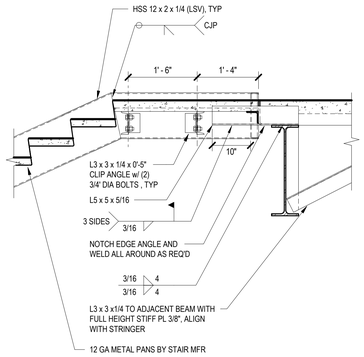

7
3/4" = 1'-0"

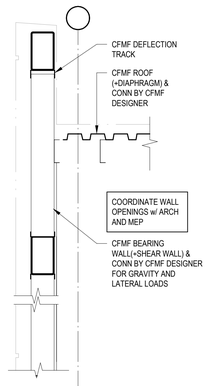

3
3/4" = 1'-0"

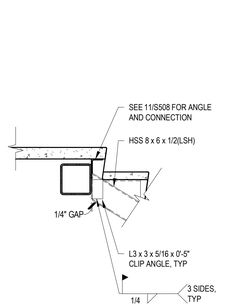

12
3/4" = 1'-0"

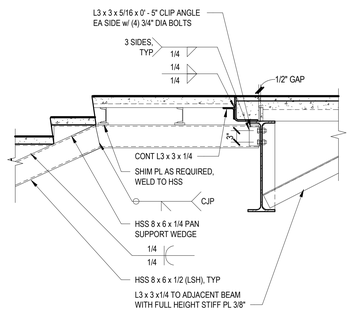

8
3/4" = 1'-0"

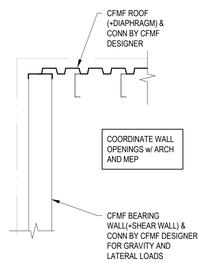

4
3/4" = 1'-0"

L.A. FUESS PARTNERS, INC.
Structural Engineers
3333 Lee Parkway, Suite 300 • Dallas, TX 75219
214.871.7030 • www.lafp.com
LAFP PROJECT NO. 19100 FIRM REG. NO. F-537

BRINKLEY SARGENT WIGINTON ARCHITECTS

Architect: Brinkley Sargent Wigginton Architects (972) 960-9970
Landscape: Kendall Landscape Architecture (214) 739-3226
Structural: L.A. Fuess Partners, Inc (214)
MEP: M-E Engineers (214) 741-1589
Civil: KSA Engineers, Inc (903) 236-7700
Technology: M-E Engineers (303) 421-6656

LONGVIEW POLICE DEPARTMENT

XXXX SOUTH ST. LONGVIEW, TEXAS 75601

History		
#	Date	Description

STATE OF TEXAS
CHRISTOPHER T. MATTHEWS
105076
LICENSED
PROFESSIONAL ENGINEER
8-19-2020

STEEL DETAILS

20513
08/19/2020
S508

BID ISSUE

8/17/2020 11:09:44 AM
C:\Temp\19100 - Longview Police Building-R19_jwarren.rvt

COLLECTOR BEAM SIZE	FACTORED AXIAL DESIGN LOAD (KIPS)	FACTORED SHEAR DESIGN LOAD (KIPS)
W14	30	15
W16	40	15
W18	85	20
W21	85	40
W24	85	40
W30	85	40

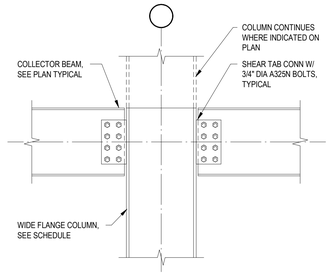

TYPICAL BEAM-TO-COLUMN FLANGE CONNECTION

NOTE: INFRAMING BEAMS AND GIRDERS NOT SHOWN FOR CLARITY

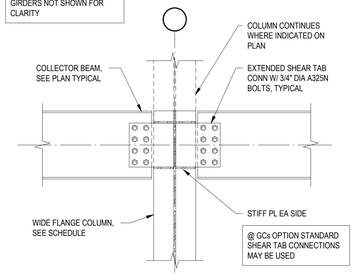

BEAM-TO-COLUMN WEB CONNECTION

COLLECTOR DESIGN NOTES:
1. SEE PLAN FOR COLLECTOR LOCATIONS AND CONNECTION DESIGN FORCES.
2. DETAILS SHOWN FOR CONCEPT ONLY. A PROFESSIONAL ENGINEER LICENSED IN THE STATE OF TEXAS WORKING FOR THE FABRICATOR SHALL DESIGN THE FINAL CONNECTION PLATE THICKNESSES, WELDS, NUMBER OF BOLTS, AND COLUMN/BEAM WEB DOUBLER PLATES (IF/AS REQD).
3. PROVIDE ROOF METAL DECK ATTACHMENTS @ 6" O.C. ALONG COLLECTORS, TYPICAL, UNO.

13 COLLECTOR BEAM CONNECTIONS TYPICAL DETAIL
NO SCALE

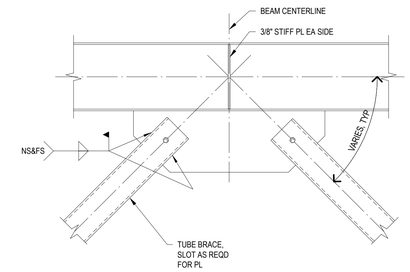

1 VERTICAL BRACE CONNECTION TYPICAL DETAIL
NO SCALE

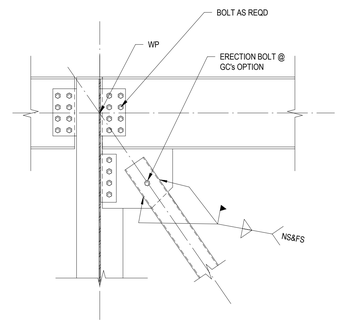

14 VERTICAL BRACE CONNECTION TYPICAL DETAIL
NO SCALE

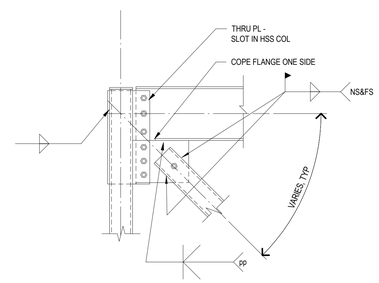

10 VERTICAL BRACE CONNECTION TYPICAL DETAIL
NO SCALE

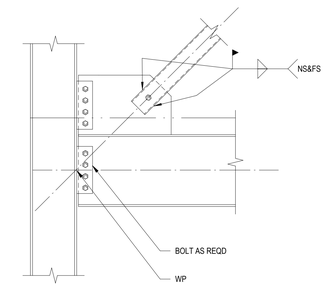

6 VERTICAL BRACE CONNECTION TYPICAL DETAIL
NO SCALE

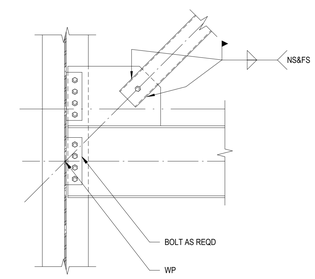

2 VERTICAL BRACE CONNECTION TYPICAL DETAIL
NO SCALE

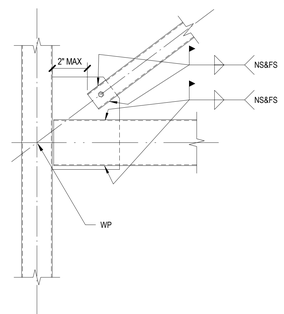

15 VERTICAL BRACE CONNECTION TYPICAL DETAIL
NO SCALE

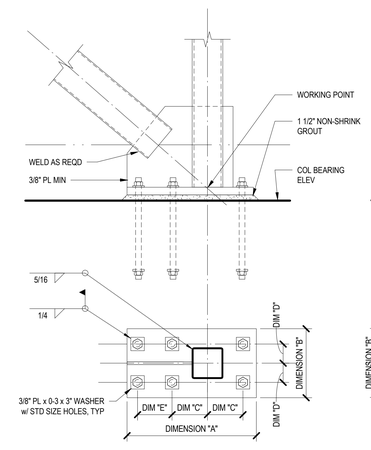

12 TYPICAL DETAIL
NO SCALE

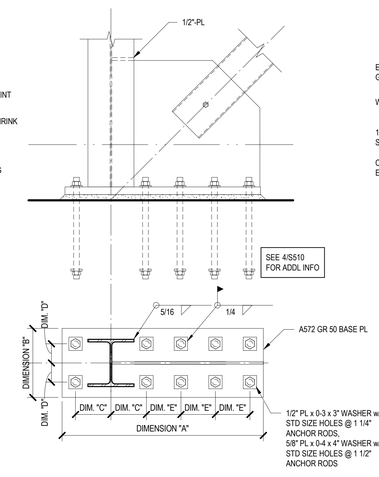

8 TYPICAL DETAIL
NO SCALE

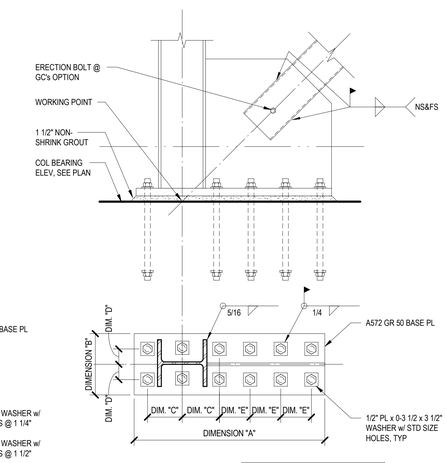

NOTE: SEE PLAN AND ELEVATIONS FOR COLUMN ORIENTATION AND BRACE LAYOUT, TYP

4 TYPICAL DETAIL
NO SCALE

VERTICAL BRACE NOTES
---
1. MEMBER CONNECTIONS TO BE DESIGNED FOR FORCES (KIPS) SHOWN. FORCES INDICATED ARE FACTORED ACCORDING TO LOAD RESISTANCE FACTOR DESIGN METHOD. (LRFD)
2. CONNECTIONS SHALL BE DESIGNED AND DETAILED TO TRANSFER FORCES BETWEEN MEMBERS WITHOUT ECCENTRICITY.
3. CONNECTIONS SHALL BE DESIGNED AND DETAILED FOR BOTH TENSION AND COMPRESSION PER FORCES PROVIDED.
4. CONTRACTOR TO DESIGN AND DETAIL MEMBER CONNECTIONS ACCORDING TO LOAD RESISTANCE FACTOR DESIGN METHOD (LRFD) PUBLISHED BY AMERICAN INSTITUTE OF STEEL CONSTRUCTION. (AISC)
5. WELD LENGTH AT EACH CONTACT CONNECTION SHALL EQUAL OR EXCEED THE WIDTH OF CONNECTING MEMBER. FOR EXAMPLE, HSS5x5 TUBE SHALL HAVE 5 INCHES WELD AT EACH SIDE OF SLOTTED PLATE. TOTAL TO BE 20 INCHES OF WELD AT EACH CONNECTION.
6. FILLET WELD CONNECTIONS SHALL COMPLY WITH REQUIREMENTS NOTED IN AWS D1.1.
7. AT EACH END OF HORIZONTAL W-FLANGE BEAM, DESIGN BEAM CONNECTION TO RESIST RESULTANT FORCES DUE TO INFRAMING BRACE MEMBERS AND GRAVITY LOAD SILMULTANEOUSLY. FACTORED GRAVITY LOAD IS SHEAR FORCE NOTED IN COLLECTOR SCHEDULE. SEE VERTICAL BRACE FRAME ELEVATION FOR FORCES OF INFRAMING BRACE MEMBERS.
8. AT EACH END OF HORIZONTAL TUBE, CONNECT TUBE TO GUSSET PLATE WITH FILLET WELD. SEE NOTE 5 FOR MIN WELD LENGTH.

L.A. FUESS PARTNERS, INC.
Structural Engineers
3333 Lee Parkway, Suite 300 • Dallas, TX 75219
214.871.7010 • www.lafp.com
LAFP PROJECT NO. 19100 FIRM REG. NO. F-537

Architect: Brinkley Sargent Wigginton Architects (972) 960-9970
Landscape: Kendall Landscape Architecture (214) 739-3226
Structural: L.A. Fuess Partners, Inc (214)
MEP: M-E Engineers (214) 741-1589
Civil: KSA Engineers, Inc (903) 236-7700
Technology: M-E Engineers (303) 421-6656
BRINKLEY SARGENT WIGINTON ARCHITECTS

LONGVIEW POLICE DEPARTMENT
XXXX SOUTH ST. LONGVIEW, TEXAS 75601

History		
#	Date	Description

STATE OF TEXAS
CHRISTOPHER T. MATTHEWS
105076
LICENSED
PROFESSIONAL ENGINEER
8-19-2020

VERTICAL BRACE DETAILS

BID ISSUE

20513
08/19/2020
S510

8/17/2020 11:09:47 AM

C:\Temp\19100 - LongviewPoliceBuilding-R18_jwenzel2019.rvt

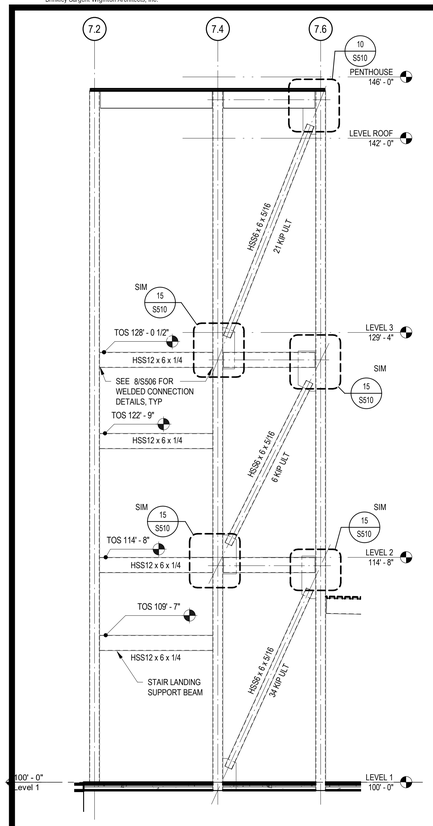

22 VERT BRACE - EAST - GRID C.9

1/4" = 1'-0"

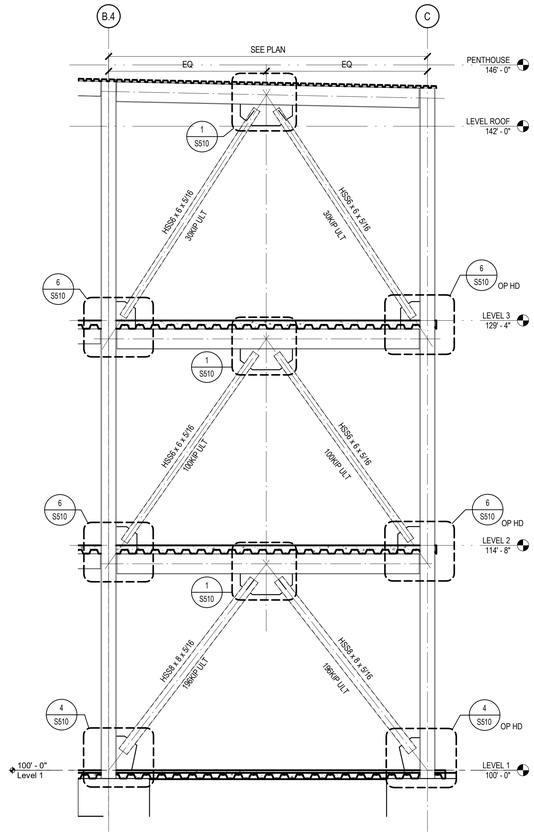

18 VERT BRACE - WEST - GRID 2

1/4" = 1'-0"

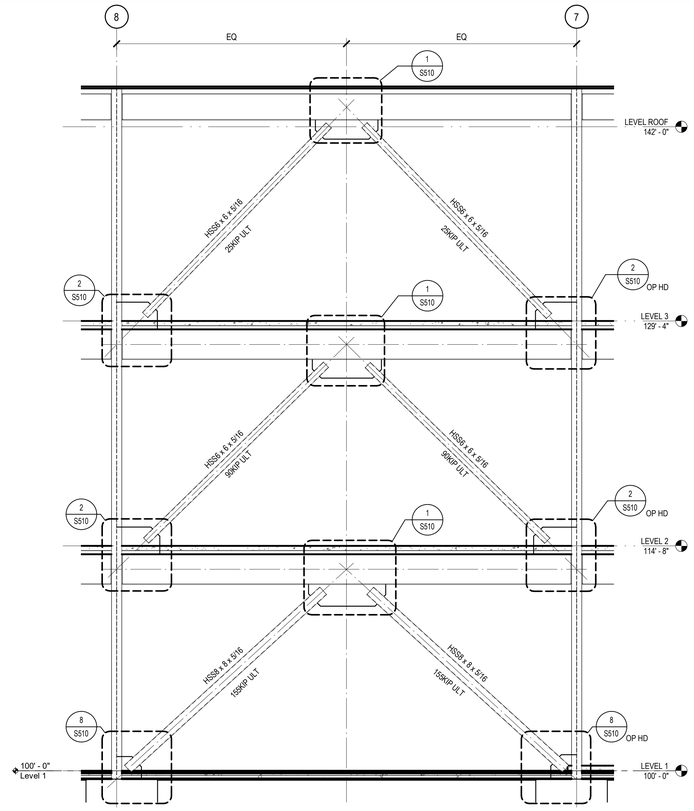

10 VERT BRACE - EAST - GRID A

1/4" = 1'-0"

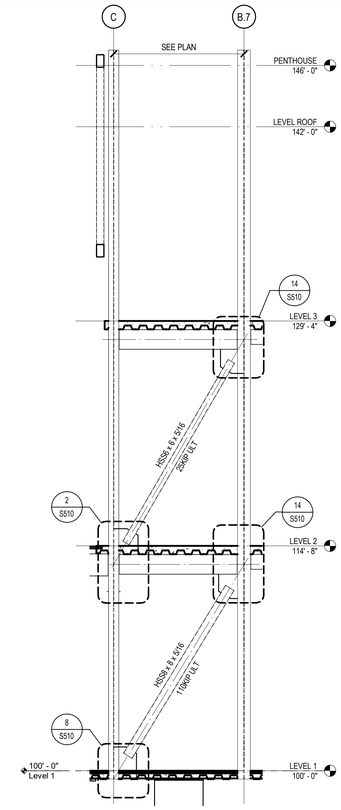

2 VERT BRACE - EAST - GRID 12 S

1/4" = 1'-0"

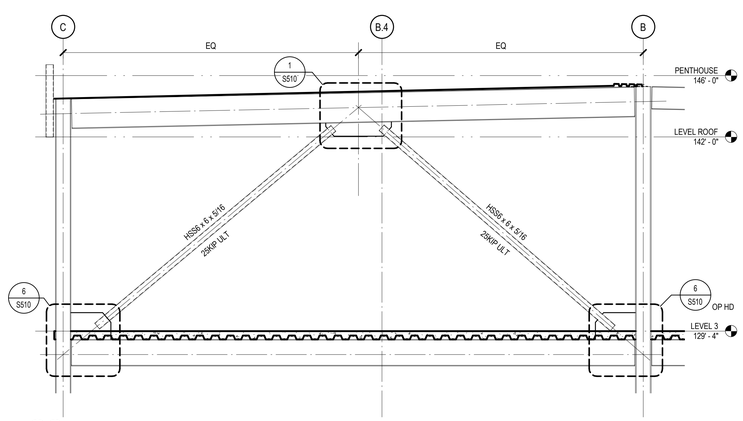

20 VERT BRACE - EAST - GRID 10

1/4" = 1'-0"

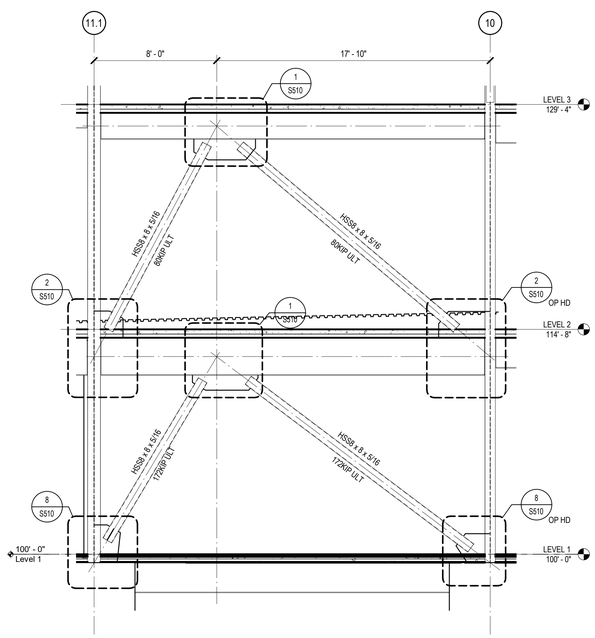

12 VERT BRACE - EAST - GRID C

1/4" = 1'-0"

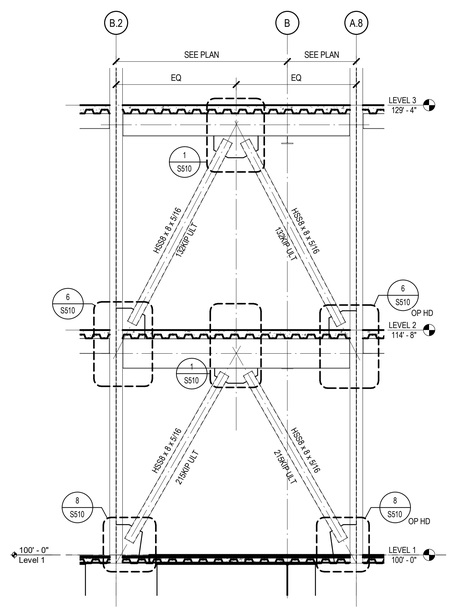

4 VERT BRACE - EAST - GRID 12 N

1/4" = 1'-0"

L.A. FUESS PARTNERS, INC.
Structural Engineers
3333 Lee Parkway, Suite 300 • Dallas, TX 75219
214.871.7010 • www.lafp.com
LAFP PROJECT NO. 19100 FIRM REG. NO. F-537

LONGVIEW POLICE DEPARTMENT

XXXX SOUTH ST. LONGVIEW, TEXAS 75601

Architect: Brinkley Sargent Wigginton Architects (972) 960-9970
Landscape: Kendall Landscape Architecture (214) 739-3226
Structural: L.A. Fuess Partners, Inc (214)
MEP: M-E Engineers (214) 741-1589
Civil: KSA Engineers, Inc (903) 236-7700
Technology: M-E Engineers (303) 421-6656

BRINKLEY SARGENT WIGINTON ARCHITECTS

History

#	Date	Description

STATE OF TEXAS
CHRISTOPHER T. MATTHEWS
105076
LICENSED
PROFESSIONAL ENGINEER
8-19-2020

VERTICAL BRACE ELEVATIONS

20513
08/19/2020
S511

BID ISSUE

8/17/2020 11:09:51 AM
C:\Temp\19100 - Longview Police Building-R19_jsaurina5291.rvt

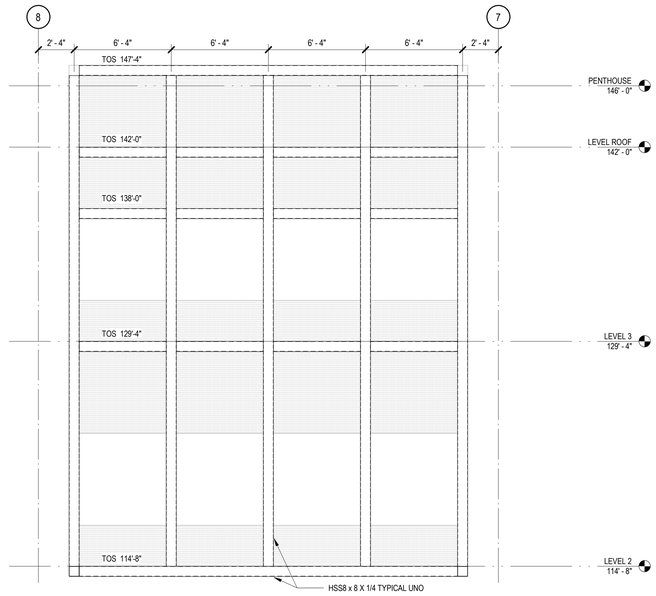

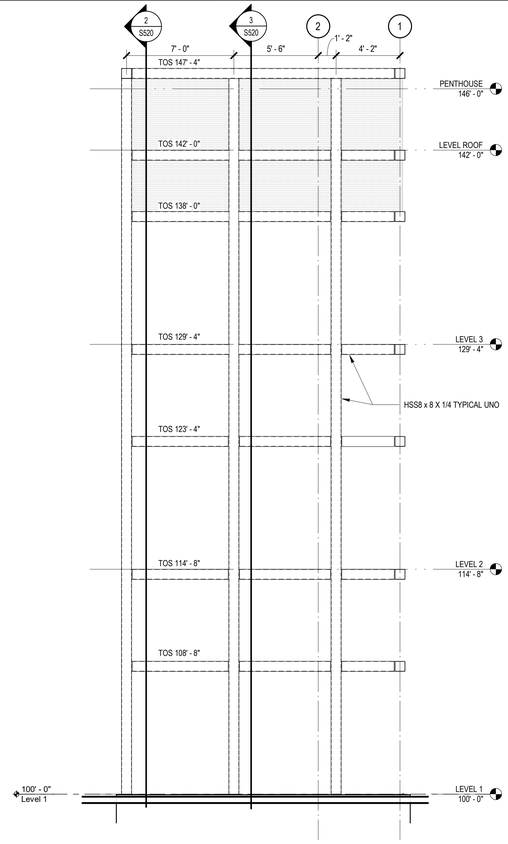

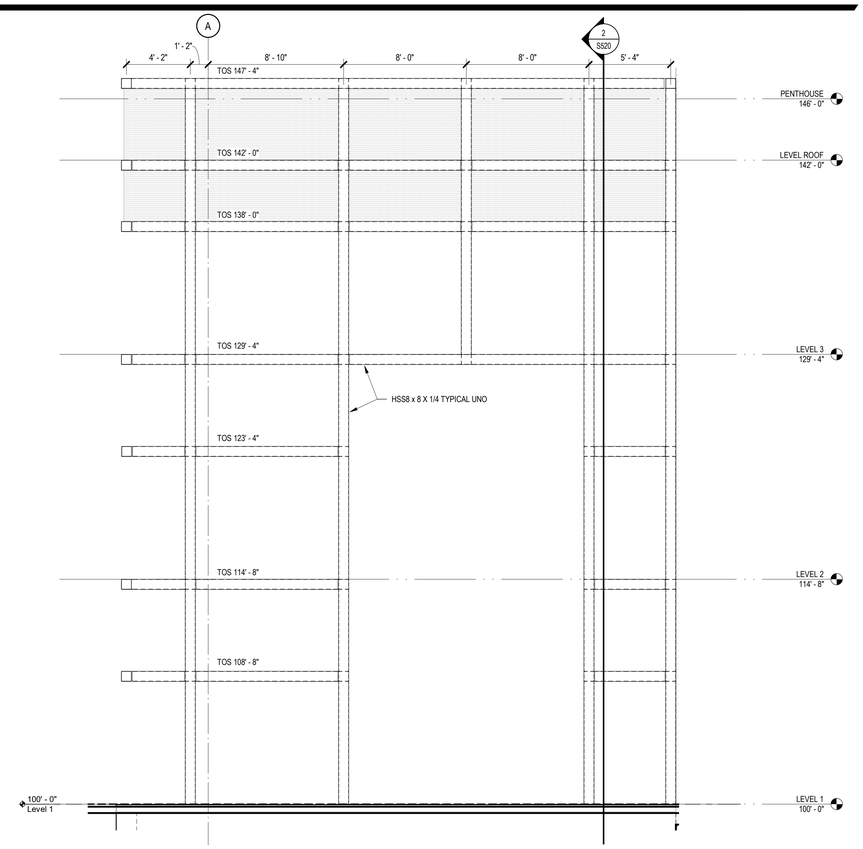

6 NORTH EAST TRELLIS

1/4" = 1'-0"

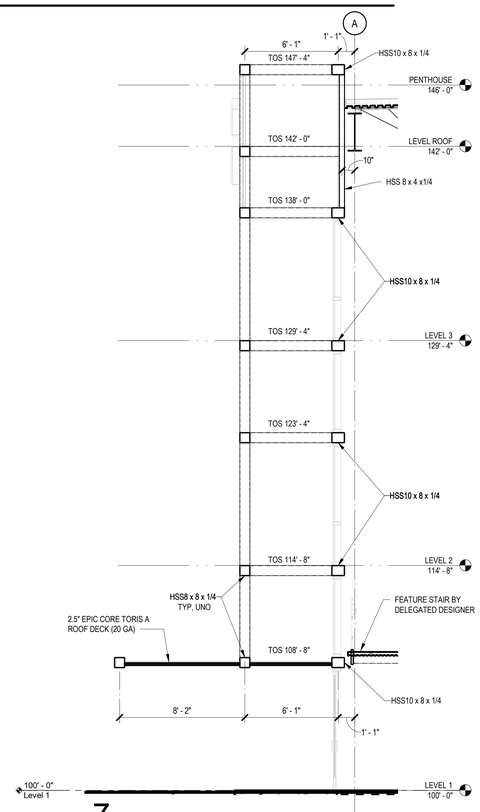

7

1/4" = 1'-0"

4 NORTH CORNER TRELLIS

1/4" = 1'-0"

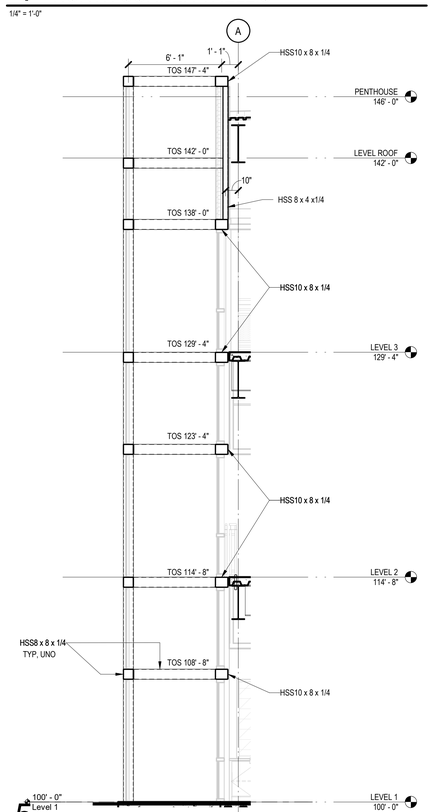

5

1/4" = 1'-0"

1 WEST CORNER TRELLIS

1/4" = 1'-0"

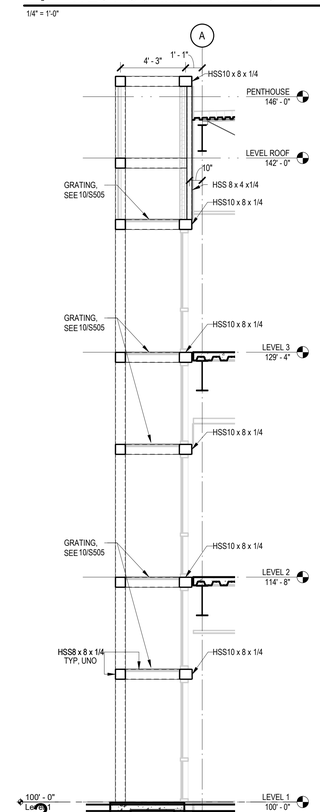

3

1/4" = 1'-0"

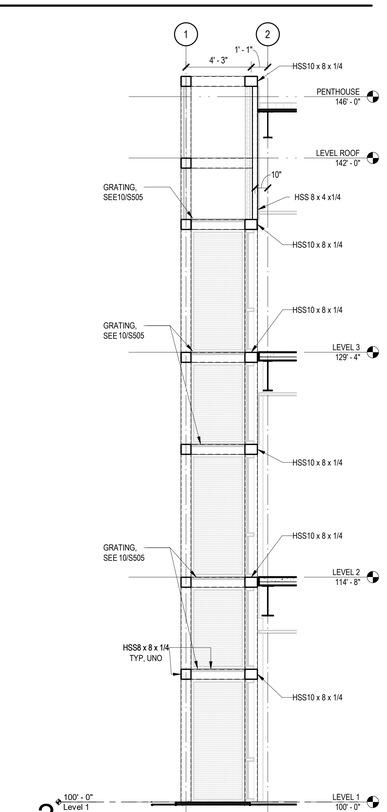

2

1/4" = 1'-0"

L.A. FUESS PARTNERS, INC.
Structural Engineers
3333 Lee Parkway, Suite 300 • Dallas, TX 75219
214.871.7010 • www.lafp.com
LAFP PROJECT NO. 19100 FIRM REG. NO. F-537

Architect: Brinkley Sargent Wigginton Architects (972) 960-9970
Landscape: Kendall Landscape Architecture (214) 739-3226
Structural: L.A. Fuess Partners, Inc (214)
MEP: M-E Engineers (214) 741-1589
Civil: KSA Engineers, Inc (903) 236-7700
Technology: M-E Engineers (303) 421-6656

BRINKLEY SARGENT WIGINTON ARCHITECTS

LONGVIEW POLICE DEPARTMENT

XXXX SOUTH ST. LONGVIEW, TEXAS 75601

History

#	Date	Description

STATE OF TEXAS
CHRISTOPHER T. MATTHEWS
105076
LICENSED
PROFESSIONAL ENGINEER
8-19-2020

TRELLIS ELEVATIONS

20513
08/19/2020
S520

BID ISSUE

8/17/2020 11:09:55 AM

C:\Temp\19100 - Longview Police Building-R18_jwecnka2ZP.rvt

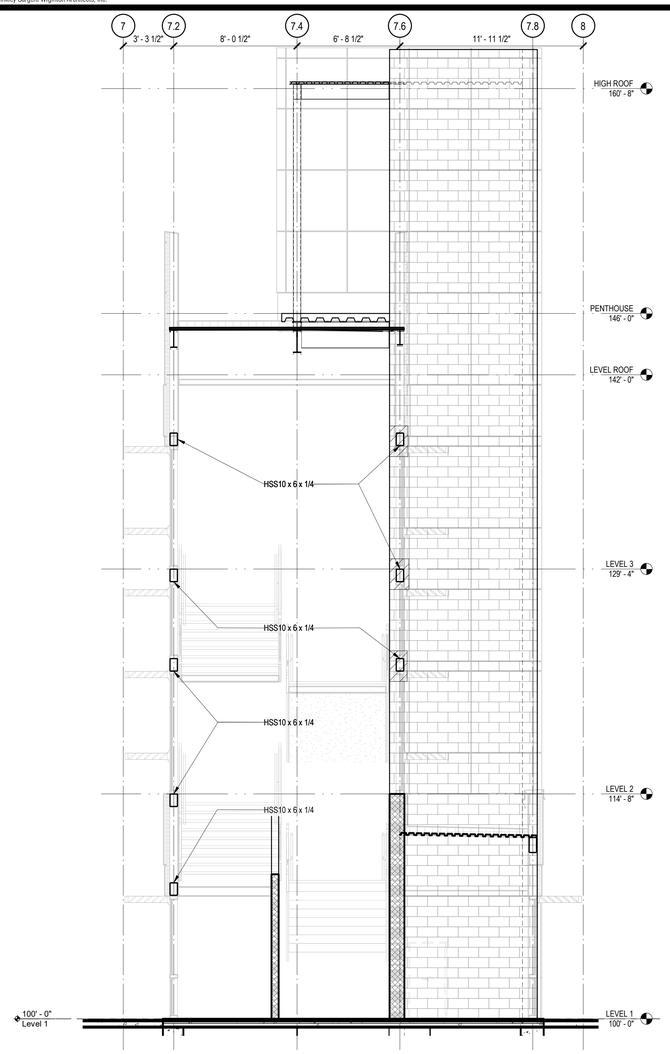

4 SOUTH STAIR ELEVATION

1/4" = 1'-0"

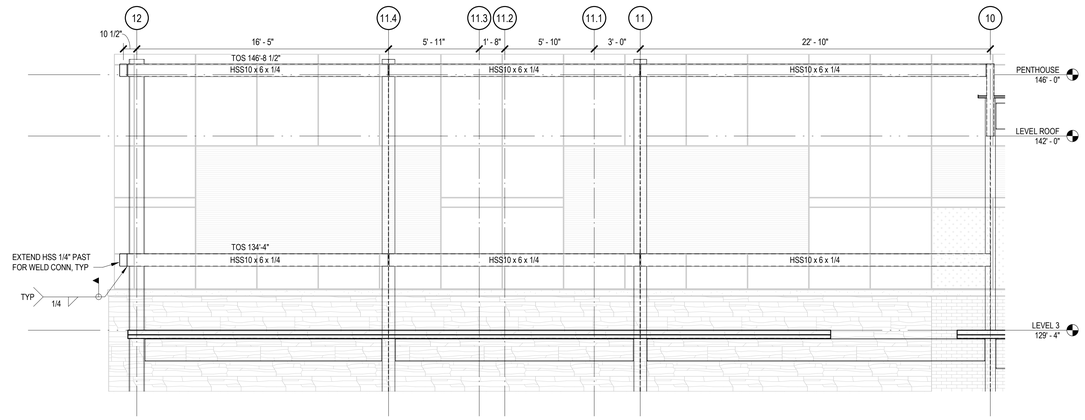

1 NORTH SCREEN WALL ELEVATION

1/4" = 1'-0"

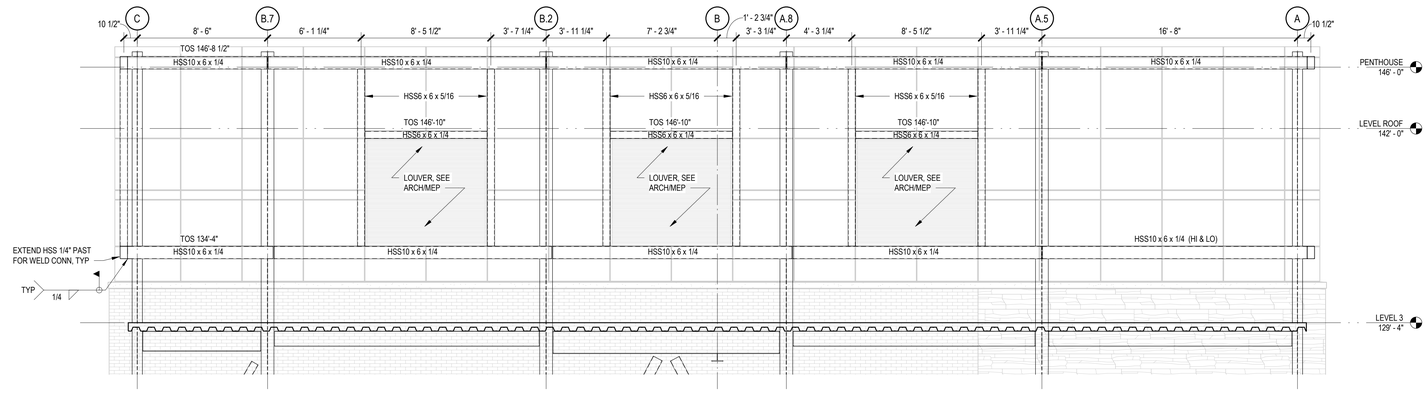

2 EAST SCREEN WALL ELEVATION

1/4" = 1'-0"

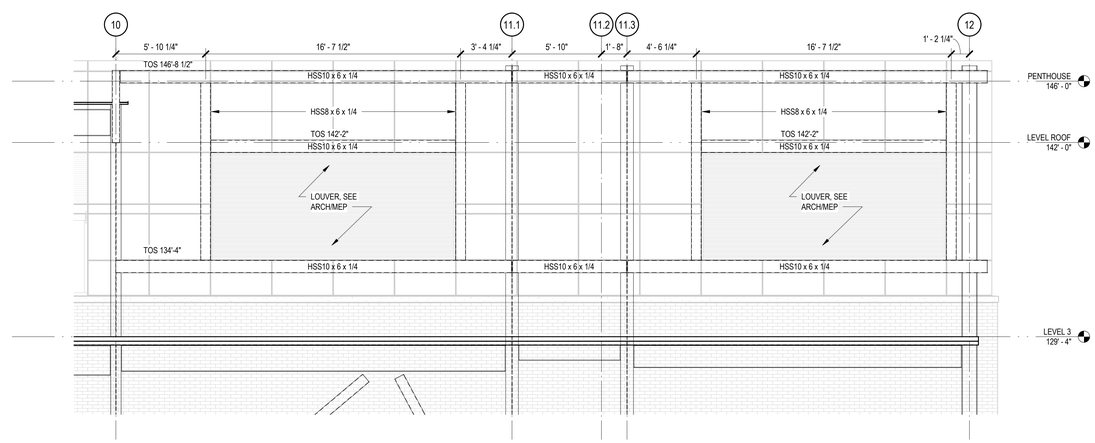

3 SOUTH SCREEN WALL ELEVATION

1/4" = 1'-0"

L.A. FUESS PARTNERS, INC.
Structural Engineers
3333 Lee Parkway, Suite 300 • Dallas, TX 75219
214.871.7030 • www.lafp.com
LAFP PROJECT NO. 19100 FIRM REG. NO. F-537

BRINKLEY SARGENT WIGINTON ARCHITECTS

Architect: Brinkley Sargent Wigginton Architects (972) 960-9970
Landscape: Kendall Landscape Architecture (214) 739-3226
Structural: L.A. Fuess Partners, Inc (214)
MEP: M-E Engineers (214) 741-1589
Civil: KSA Engineers, Inc (903) 236-7700
Technology: M-E Engineers (303) 421-6656

LONGVIEW POLICE DEPARTMENT

XXXX SOUTH ST. LONGVIEW, TEXAS 75601

History

#	Date	Description

STATE OF TEXAS
CHRISTOPHER T. MATTHEWS
105076
LICENSED
PROFESSIONAL ENGINEER
8-19-2020

SCREEN WALL & STAIR ELEVATIONS

20513
08/19/2020
S521

BID ISSUE

C:\temp\19100 - Longview PD Building - R19_jeremiah2019.rvt
8/19/2020 11:15:00 AM

© 2020 Brinkley Sargent Wiginton Architects, Inc.

302 FLOOR OR GROUND SURFACES

302.2 CARPET.
CARPET OR CARPET TILE SHALL BE SECURELY ATTACHED AND SHALL HAVE A FIRM CUSHION, PAD, OR BACKING OR NO CUSHION OR PAD. CARPET OR CARPET TILE SHALL HAVE A LEVEL LOOP, TEXTURED LOOP, LEVEL CUT PILE, OR LEVEL CUT/UNCUT PILE TEXTURE. PILE HEIGHT SHALL BE 1/2 INCH MAXIMUM. EXPOSED EDGES OF CARPET SHALL BE FASTENED TO FLOOR SURFACES AND SHALL HAVE TRIM ON THE ENTIRE LENGTH OF THE EXPOSED EDGE.

302.3 OPENINGS.
OPENINGS IN FLOOR OR GROUND SURFACES SHALL NOT ALLOW PASSAGE OF A SPHERE MORE THAN 1/2 INCH DIAMETER. ELONGATED OPENINGS SHALL BE PLACED SO THAT THE LONG DIMENSION IS PERPENDICULAR TO THE DOMINANT DIRECTION OF TRAVEL.

303 CHANGES IN LEVEL

303.2 VERTICAL.
CHANGES IN LEVEL /4 INCH HIGH MAXIMUM SHALL BE PERI D TO BE VERTICAL.

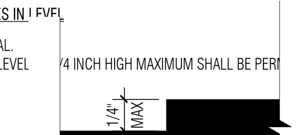

303.3 BEVELED.
CHANGES IN LEVEL VEEN 1/4 INCH HIGH MINIMUM AND 1/ HIGH MAXIMUM SHALL BE BEVELE A SLOPE NOT STEEPER THAN 1:2.

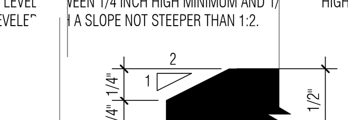

305 CLEAR FLOOR OR GROUND SPACE

305.3 SIZE.
THE CLEAR FLOOR OR GROUND SPACE SHALL BE 30 INCHES MINIMUM BY 48 INCHES MINIMUM.

305.7.1 FORWARD APPROACH.
ALCOVES SHALL BE 36 INCHES WIDE MINIMUM WHERE THE DEPTH EXCEEDS 24 INCHES.

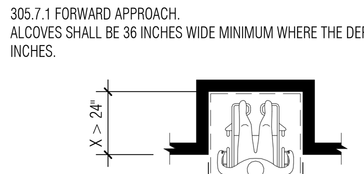

305.7.2 PARALLEL APPROACH.
ALCOVES SHALL BE 60 INCHES WIDE MINIMUM WHERE THE DEPTH EXCEEDS 15 INCHES.

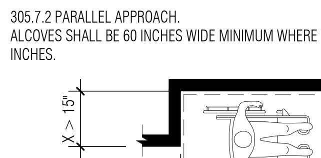

306 KNEE AND TOE CLEARANCE

306.2 TOE CLEARANCE.

306.2.1 GENERAL.
SPACE UNDER AN ELEMENT BETWEEN THE FINISH FLOOR OR GROUND AND 9 INCHES ABOVE THE FINISH FLOOR OR GROUND SHALL BE CONSIDERED TOE CLEARANCE.

306.2.2 MAXIMUM DEPTH.
TOE CLEARANCE SHALL EXTEND 25 INCHES MAXIMUM UNDER AN ELEMENT.

306.2.3 MINIMUM REQUIRED DEPTH.
WHERE TOE CLEARANCE IS REQUIRED AT AN ELEMENT AS PART OF A CLEAR FLOOR SPACE, THE TOE CLEARANCE SHALL EXTEND 17 INCHES MINIMUM UNDER THE ELEMENT.

306.2.4 ADDITIONAL CLEARANCE.
SPACE EXTENDING GREATER THAN 6 INCHES BEYOND THE AVAILABLE KNEE CLEARANCE AT 9 INCHES ABOVE THE FINISH FLOOR OR GROUND SHALL NOT BE CONSIDERED TOE CLEARANCE.

306.2.5 WIDTH.
TOE CLEARANCE SHALL BE 30 INCHES WIDE MINIMUM.

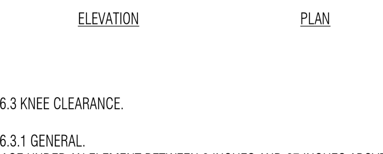

306.3 KNEE CLEARANCE.

306.3.1 GENERAL.
SPACE UNDER AN ELEMENT BETWEEN 9 INCHES AND 27 INCHES ABOVE THE FINISH FLOOR OR GROUND SHALL BE CONSIDERED KNEE CLEARANCE.

306.3.2 MAXIMUM DEPTH.
KNEE CLEARANCE SHALL EXTEND 25 INCHES MAXIMUM UNDER AN ELEMENT AT 9 INCHES ABOVE THE FINISH FLOOR OR GROUND.

306.3.3 MINIMUM REQUIRED DEPTH.
WHERE KNEE CLEARANCE IS REQUIRED UNDER AN ELEMENT AS PART OF A CLEAR FLOOR SPACE, THE KNEE CLEARANCE SHALL BE 11 INCHES DEEP MINIMUM AT 9 INCHES ABOVE THE FINISH FLOOR OR GROUND, AND 8 INCHES DEEP MINIMUM AT 27 INCHES ABOVE THE FINISH FLOOR OR GROUND.

306.3.4 CLEARANCE REDUCTION.
BETWEEN 9 INCHES AND 27 INCHES ABOVE THE FINISH
FLOOR OR GROUND, THE KNEE CLEARANCE SHALL BE PERMITTED TO REDUCE AT A RATE OF 1 INCH IN DEPTH FOR EACH 6 INCHES IN HEIGHT.

306.3.5 WIDTH.
KNEE CLEARANCE SHALL BE 30 INCHES WIDE MINIMUM.

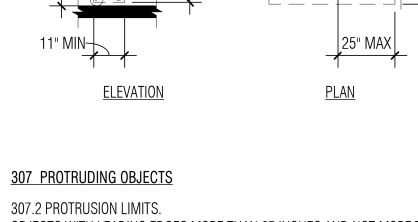

307 PROTRUDING OBJECTS

307.2 PROTRUSION LIMITS.
OBJECTS WITH LEADING EDGES MORE THAN 27 INCHES AND NOT MORE THAN 80 INCHES ABOVE THE FINISH FLOOR OR GROUND SHALL PROTRUDE 4 INCHES MAXIMUM HORIZONTALLY INTO THE CIRCULATION PATH.

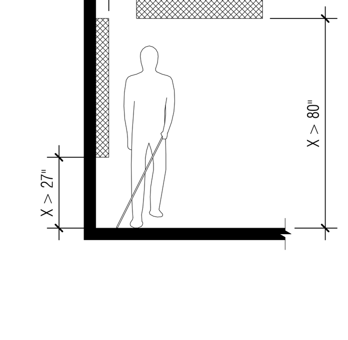

308 REACH RANGES

308.2 FORWARD REACH.

308.2.1 UNOBSTRUCTED.
WHERE A FORWARD REACH IS UNOBSTRUCTED, THE HIGH FORWARD REACH SHALL BE 48 INCHES MAXIMUM AND THE LOW FORWARD REACH SHALL BE 15 INCHES MINIMUM ABOVE THE FINISH FLOOR OR GROUND.

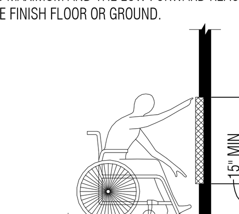

308.2.2 OBSTRUCTED HIGH REACH.
WHERE A HIGH FORWARD REACH IS OVER AN OBSTRUCTION, THE CLEAR FLOOR SPACE SHALL EXTEND BENEATH THE ELEMENT FOR A DISTANCE NOT LESS THAN THE REQUIRED REACH DEPTH OVER THE OBSTRUCTION. THE HIGH FORWARD REACH SHALL BE 48 INCHES MAXIMUM WHERE THE REACH DEPTH IS 20 INCHES MAXIMUM. WHERE THE REACH DEPTH EXCEEDS 20 INCHES, THE HIGH FORWARD REACH SHALL BE 44 INCHES MAXIMUM AND THE REACH DEPTH SHALL BE 25 INCHES MAXIMUM.

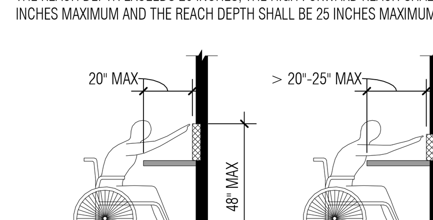

308.3 SIDE REACH.

308.3.1 UNOBSTRUCTED.
WHERE A CLEAR FLOOR OR GROUND SPACE ALLOWS A PARALLEL APPROACH TO AN ELEMENT AND THE SIDE REACH IS UNOBSTRUCTED, THE HIGH SIDE REACH SHALL BE 48 INCHES MAXIMUM AND THE LOW SIDE REACH SHALL BE 15 INCHES MINIMUM ABOVE THE FINISH FLOOR OR GROUND.

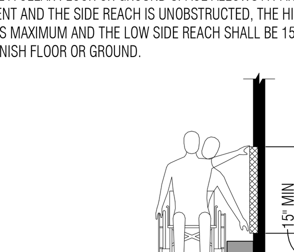

308.3.2 OBSTRUCTED HIGH REACH.
WHERE A CLEAR FLOOR OR GROUND SPACE ALLOWS A PARALLEL APPROACH TO AN ELEMENT AND THE HIGH SIDE REACH IS OVER AN OBSTRUCTION, THE HEIGHT OF THE OBSTRUCTION SHALL BE 34
INCHES MAXIMUM AND THE DEPTH OF THE OBSTRUCTION SHALL BE 24 INCHES MAXIMUM. THE HIGH SIDE REACH SHALL BE 48 INCHES MAXIMUM FOR A REACH DEPTH OF 10 INCHES MAXIMUM. WHERE THE REACH DEPTH EXCEEDS 10 INCHES, THE HIGH SIDE REACH SHALL BE 46 INCHES MAXIMUM FOR A REACH DEPTH OF 24 INCHES MAXIMUM.

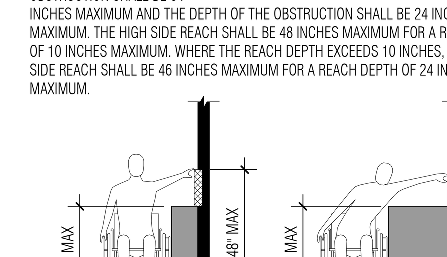

309 OPERABLE PARTS

309.4 OPERATION.
OPERABLE PARTS SHALL BE OPERABLE WITH ONE HAND AND SHALL NOT REQUIRE TIGHT GRASPING, PINCHING, OR TWISTING OF THE WRIST. THE FORCE REQUIRED TO ACTIVATE OPERABLE PARTS SHALL BE 5 POUNDS MAXIMUM.

403 WALKING SURFACES

403.3 SLOPE.
THE RUNNING SLOPE OF WALKING SURFACES SHALL NOT BE STEEPER THAN 1:20. THE CROSS SLOPE OF WALKING SURFACES SHALL NOT BE STEEPER THAN 1:48.

403.5.1 CLEAR WIDTH.
THE CLEAR WIDTH OF WALKING SURFACES SHALL BE 36 INCHES MINIMUM.

403.5.3 PASSING SPACES.
AN ACCESSIBLE ROUTE WITH A CLEAR WIDTH LESS THAN 60 INCHES SHALL PROVIDE PASSING SPACES AT INTERVALS OF 200 FEET MAXIMUM. PASSING SPACES SHALL BE A SPACE 60 INCHES MINIMUM BY 60 INCHES MINIMUM.

404 DOORS, DOORWAYS, AND GATES

404.2.2 DOUBLE-LEAF DOORS AND GATES.
AT LEAST ONE OF THE ACTIVE LEAVES OF DOORWAYS WITH TWO LEAVES SHALL COMPLY WITH 404.2.3.

404.2.3 CLEAR WIDTH.
DOOR OPENINGS SHALL PROVIDE A CLEAR WIDTH OF 32 INCHES MINIMUM. CLEAR OPENINGS OF DOORWAYS WITH SWINGING DOORS SHALL BE MEASURED BETWEEN THE FACE OF THE DOOR AND THE STOP, WITH THE DOOR OPEN 90 DEGREES. OPENINGS MORE THAN 24 INCHES DEEP SHALL PROVIDE A CLEAR OPENING OF 36 INCHES MINIMUM. THERE SHALL BE NO PROJECTIONS INTO THE REQUIRED CLEAR OPENING WIDTH LOWER THAN 34 INCHES ABOVE THE FINISH FLOOR OR GROUND. PROJECTIONS INTO THE CLEAR OPENING WIDTH BETWEEN 34 INCHES AND 80 INCHES ABOVE THE FINISH FLOOR OR GROUND SHALL NOT EXCEED 4 INCHES.

404.2.4 MANEUVERING CLEARANCES.
MANEUVERING CLEARANCES SHALL EXTEND THE FULL WIDTH OF THE DOORWAY AND THE REQUIRED LATCH SIDE OR HINGE SIDE CLEARANCE. MANEUVERING AREA AT DOOR AS FOLLOWS:

FRONT APPROACH PULL SIDE - 60" MIN WIDTH & 18" MIN BESIDE STRIKE EDGE
FRONT APPROACH PUSH SIDE - 48" MIN WIDTH & 0" BESIDE STRIKE EDGE*
*12" AT STRIKE EDGE IF CLOSER AND LATCH ARE PROVIDED

HINGE SIDE APPROACH PULL SIDE - 60" MIN WIDTH & 36" MIN BESIDE STRIKE EDGE
HINGE SIDE APPROACH PULL SIDE - 54" MIN WIDTH & 42" MIN BESIDE STRIKE EDGE
HINGE SIDE APPROACH PUSH SIDE - 42" MIN WIDTH* & 22" MIN BESIDE STRIKE EDGE
*ADD 6" IF CLOSER AND LATCH ARE PROVIDED

LATCH SIDE APPROACH PULL SIDE - 48" MIN WIDTH* & 24" MIN BESIDE STRIKE EDGE
LATCH SIDE APPROACH PUSH SIDE - 42" MIN WIDTH* & 24" MIN BESIDE STRIKE EDGE
*ADD 6" IF CLOSER IS PROVIDED

404.2.5 THRESHOLDS.
THRESHOLDS, IF PROVIDED AT DOORWAYS, SHALL BE 1/2 INCH HIGH MAXIMUM.

404.2.6 DOORS IN SERIES AND GATES IN SERIES.
THE DISTANCE BETWEEN TWO HINGED OR PIVOTED DOORS IN SERIES AND GATES IN SERIES SHALL BE 48 INCHES MINIMUM PLUS THE WIDTH OF DOORS OR GATES SWINGING INTO THE SPACE.

404.2.7 DOOR AND GATE HARDWARE.
HANDLES, PULLS, LATCHES, LOCKS, AND OTHER OPERABLE PARTS ON DOORS AND GATES SHALL COMPLY WITH 309.4. OPERABLE PARTS OF SUCH HARDWARE SHALL BE 34 INCHES MINIMUM AND 48 INCHES MAXIMUM ABOVE THE FINISH FLOOR OR GROUND. WHERE SLIDING DOORS ARE IN THE FULLY OPEN POSITION, OPERATING HARDWARE SHALL BE EXPOSED AND USABLE FROM BOTH SIDES.

404.2.8.1 DOOR CLOSERS AND GATE CLOSERS.
DOOR CLOSERS AND GATE CLOSERS SHALL BE ADJUSTED SO THAT FROM AN OPEN POSITION OF 90 DEGREES, THE TIME REQUIRED TO MOVE THE DOOR TO A POSITION OF 12 DEGREES FROM THE LATCH IS 5 SECONDS MINIMUM.

404.2.8.2 SPRING HINGES.
DOOR AND GATE SPRING HINGES SHALL BE ADJUSTED SO THAT FROM THE OPEN POSITION OF 70 DEGREES, THE DOOR OR GATE SHALL MOVE TO THE CLOSED POSITION IN 1.5 SECONDS MINIMUM.

404.2.9 DOOR AND GATE OPENING FORCE.
FIRE DOORS SHALL HAVE A MINIMUM OPENING FORCE ALLOWABLE BY THE APPROPRIATE ADMINISTRATIVE AUTHORITY. THE FORCE FOR PUSHING OR PULLING OPEN A DOOR OR GATE OTHER THAN FIRE DOORS SHALL BE AS FOLLOWS:

1. INTERIOR HINGED DOORS AND GATES: 5 POUNDS MAXIMUM.
2. SLIDING OR FOLDING DOORS: 5 POUNDS MAXIMUM.

405 RAMPS

405.2 SLOPE.
RAMP RUNS SHALL HAVE A RUNNING SLOPE NOT STEEPER THAN 1:12.

405.3 CROSS SLOPE.
CROSS SLOPE OF RAMP RUNS SHALL NOT BE STEEPER THAN 1:48.

405.5 CLEAR WIDTH.
THE CLEAR WIDTH OF A RAMP RUN AND, WHERE HANDRAILS ARE PROVIDED, THE CLEAR WIDTH BETWEEN HANDRAILS SHALL BE 36 INCHES (915 MM) MINIMUM.

405.6 RISE.
THE RISE FOR ANY RAMP RUN SHALL BE 30 INCHES (760 MM) MAXIMUM.

405.7 LANDINGS.
RAMPS SHALL HAVE LANDINGS AT THE TOP AND THE BOTTOM OF EACH RAMP RUN.

405.7.2 WIDTH.
THE LANDING CLEAR WIDTH SHALL BE AT LEAST AS WIDE AS THE WIDEST RAMP RUN LEADING TO THE LANDING.

405.7.3 LENGTH.
THE LANDING CLEAR LENGTH SHALL BE 60 INCHES (1525 MM) LONG MINIMUM.

405.7.4 CHANGE IN DIRECTION.
RAMPS THAT CHANGE DIRECTION BETWEEN RUNS AT LANDINGS SHALL HAVE A CLEAR LANDING 60 INCHES MINIMUM BY 60 INCHES MINIMUM.

405.9 EDGE PROTECTION.
EDGE PROTECTION COMPLYING WITH 405.9.1 OR 405.9.2 SHALL BE PROVIDED ON EACH SIDE OF RAMP RUNS AND AT EACH SIDE OF RAMP LANDINGS.

405.9.1 EXTENDED FLOOR OR GROUND SURFACE.
THE FLOOR OR GROUND SURFACE OF THE RAMP RUN OR LANDING SHALL EXTEND 12 INCHES MINIMUM BEYOND THE INSIDE FACE OF A HANDRAIL
405.9.2 CURB OR BARRIER.
A CURB OR BARRIER SHALL BE PROVIDED THAT PREVENTS THE PASSAGE OF A 4 INCH DIAMETER SPHERE, WHERE ANY PORTION OF THE SPHERE IS WITHIN 4 INCHES OF THE FINISH FLOOR OR GROUND SURFACE.

405.10 WET CONDITIONS.
LANDINGS SUBJECT TO WET CONDITIONS SHALL BE DESIGNED TO PREVENT THE ACCUMULATION OF WATER.

406 CURB RAMPS

406.1 GENERAL.
CURB RAMPS ON ACCESSIBLE ROUTES SHALL COMPLY WITH 406, 405.2 THROUGH 405.5, AND 405.10.

406.2 COUNTER SLOPE.
COUNTER SLOPES OF ADJOINING GUTTERS AND ROAD SURFACES IMMEDIATELY ADJACENT TO THE CURB RAMP SHALL NOT BE STEEPER THAN 1:20. THE ADJACENT SURFACES AT TRANSITIONS AT CURB RAMPS TO WALKS, GUTTERS, AND STREETS SHALL BE AT THE SAME LEVEL.

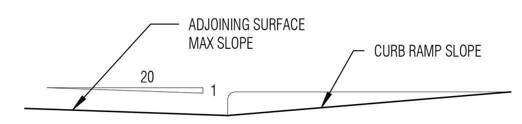

406.3 SIDES OF CURB RAMPS.
WHERE PROVIDED, CURB RAMP FLARES SHALL NOT BE STEEPER THAN 1:10.

406.4 LANDINGS.
LANDINGS SHALL BE PROVIDED AT THE TOPS OF CURB RAMPS. THE LANDING CLEAR LENGTH SHALL BE 36 INCHES MINIMUM. THE LANDING CLEAR WIDTH SHALL BE AT LEAST AS WIDE AS THE CURB RAMP, EXCLUDING FLARED SIDES, LEADING TO THE LANDING.

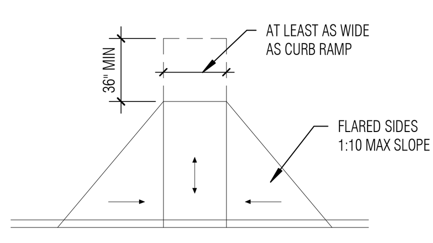

406.5 LOCATION.
CURB RAMPS AND THE FLARED SIDES OF CURB RAMPS SHALL BE LOCATED SO THAT THEY DO NOT PROJECT INTO VEHICULAR TRAFFIC LANES, PARKING SPACES, OR PARKING ACCESS AISLES. CURB RAMPS AT MARKED CROSSINGS SHALL BE WHOLLY CONTAINED WITHIN THE MARKINGS, EXCLUDING ANY FLARED SIDES.

406.6 DIAGONAL CURB RAMPS.
DIAGONAL OR CORNER TYPE CURB RAMPS WITH RETURNED CURBS OR OTHER WELLDEFINED EDGES SHALL HAVE THE EDGES PARALLEL TO THE DIRECTION OF PEDESTRIAN FLOW. THE BOTTOM OF DIAGONAL CURB RAMPS SHALL HAVE A CLEAR SPACE 48 INCHES MINIMUM OUTSIDE ACTIVE TRAFFIC LANES OF THE ROADWAY. DIAGONAL CURB RAMPS PROVIDED AT MARKED CROSSINGS SHALL PROVIDE THE 48 INCHES MINIMUM CLEAR SPACE WITHIN THE MARKINGS. DIAGONAL CURB RAMPS WITH FLARED SIDES SHALL HAVE A SEGMENT OF CURB 24 INCHES LONG MINIMUM LOCATED ON EACH SIDE OF THE CURB RAMP AND WITHIN THE MARKED CROSSING.

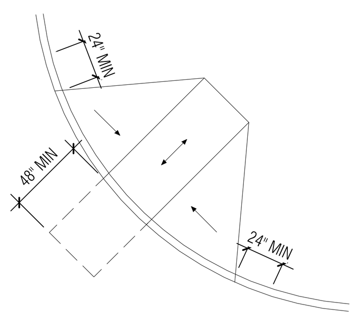

406.7 ISLANDS.
RAISED ISLANDS IN CROSSINGS SHALL BE CUT THROUGH LEVEL WITH THE STREET OR HAVE CURB RAMPS AT BOTH SIDES. EACH CURB RAMP SHALL HAVE A LEVEL AREA 48 INCHES LONG MINIMUM BY 36 INCHES WIDE MINIMUM AT THE TOP OF THE CURB RAMP IN THE PART OF THE ISLAND INTERSECTED BY THE CROSSINGS. EACH 48 INCH MINIMUM BY 36 INCH MINIMUM AREA SHALL BE ORIENTED SO THAT THE 48 INCH MINIMUM LENGTH IS IN THE DIRECTION OF THE RUNNING SLOPE OF THE CURB RAMP IT SERVES. THE 48 INCH MINIMUM BY 36 INCH MINIMUM AREAS AND THE ACCESSIBLE ROUTE SHALL BE PERMITTED TO OVERLAP.

407 ELEVATORS

407.2.1 CALL CONTROLS.
WHERE ELEVATOR CALL BUTTONS OR KEYPADS ARE PROVIDED, THEY SHALL COMPLY 309.4. CALL BUTTONS SHALL BE RAISED OR FLUSH.

407.2.1.1 HEIGHT.
CALL BUTTONS AND KEYPADS SHALL BE LOCATED WITHIN ONE OF THE REACH RANGES SPECIFIED IN 308, MEASURED TO THE CENTERLINE OF THE HIGHEST OPERABLE PART.

407.2.1.2 SIZE.
CALL BUTTONS SHALL BE 3/4 INCH MINIMUM IN THE SMALLEST DIMENSION.

407.2.1.4 LOCATION.
THE CALL BUTTON THAT DESIGNATES THE UP DIRECTION SHALL BE LOCATED ABOVE THE CALL BUTTON THAT DESIGNATES THE DOWN DIRECTION.

407.2.2.2 VISIBLE SIGNALS.
VISIBLE SIGNAL FIXTURES SHALL BE CENTERED AT 72 INCHES MINIMUM ABOVE THE FINISH FLOOR OR GROUND. THE VISIBLE SIGNAL ELEMENTS SHALL BE 2 1/2 INCHES MINIMUM MEASURED ALONG THE VERTICAL CENTERLINE OF THE ELEMENT. SIGNALS SHALL BE VISIBLE FROM THE FLOOR AREA ADJACENT TO THE HALL CALL BUTTON.

407.2.3.1 FLOOR DESIGNATION.
FLOOR DESIGNATIONS SHALL BE PROVIDED ON BOTH JAMBS OF ELEVATOR HOISTWAY ENTRANCES. FLOOR DESIGNATIONS SHALL BE PROVIDED IN BOTH TACTILE CHARACTERS AND BRAILLE. TACTILE CHARACTERS SHALL BE 2 INCHES HIGH MINIMUM. A TACTILE STAR SHALL BE PROVIDED ON BOTH JAMBS AT THE MAIN ENTRY LEVEL.

410 PLATFORM LIFTS

410.1 GENERAL.
PLATFORM LIFTS SHALL NOT BE ATTENDANT-OPERATED AND SHALL PROVIDE UNASSISTED ENTRY AND EXIT FROM THE LIFT.

410.3 CLEAR FLOOR SPACE.
CLEAR FLOOR SPACE IN PLATFORM LIFTS SHALL COMPLY WITH 305.

410.6 DOORS AND GATES.
DOORS SHALL REMAIN OPEN FOR 20 SECONDS MINIMUM. END DOORS AND GATES SHALL PROVIDE A CLEAR WIDTH 32 INCHES MINIMUM. SIDE DOORS AND GATES SHALL PROVIDE A CLEAR WIDTH 42 INCHES MINIMUM.

502 PARKING SPACES

502.2 VEHICLE SPACES.
CAR PARKING SPACES SHALL BE 96 INCHES WIDE MINIMUM AND VAN PARKING SPACES SHALL BE 132 INCHES WIDE MINIMUM.

502.3 ACCESS AISLE.
ACCESS AISLES SHALL ADJOIN AN ACCESSIBLE ROUTE. TWO PARKING SPACES SHALL BE PERMITTED TO SHARE A COMMON ACCESS AISLE.

502.3.1 WIDTH.
ACCESS AISLES SERVING CAR AND VAN PARKING SPACES SHALL BE 60 INCHES WIDE MINIMUM.

502.3.2 LENGTH.
ACCESS AISLES SHALL EXTEND THE FULL LENGTH OF THE PARKING SPACES THEY SERVE.

502.3.3 MARKING.
ACCESS AISLES SHALL BE MARKED SO AS TO DISCOURAGE PARKING IN THEM.

502.6 IDENTIFICATION.
PARKING SPACE IDENTIFICATION SIGNS SHALL INCLUDE THE INTERNATIONAL SYMBOL OF ACCESSIBILITY. SIGNS IDENTIFYING VAN PARKING SPACES SHALL CONTAIN THE DESIGNATION "VAN ACCESSIBLE." SIGNS SHALL BE 60 INCHES MINIMUM ABOVE THE FINISH FLOOR OR GROUND SURFACE MEASURED TO THE BOTTOM OF THE SIGN.

503 PASSENGER LOADING ZONES

503.2 VEHICLE PULL-UP SPACE.
PASSENGER LOADING ZONES SHALL PROVIDE A VEHICULAR PULL-UP SPACE 96 INCHES WIDE MINIMUM AND 20 FEET LONG MINIMUM.

503.3 ACCESS AISLE.
PASSENGER LOADING ZONES SHALL PROVIDE ACCESS AISLES COMPLYING WITH 503 ADJACENT TO THE VEHICLE PULL-UP SPACE. ACCESS AISLES SHALL ADJOIN AN ACCESSIBLE ROUTE AND SHALL NOT OVERLAP THE VEHICULAR WAY.

503.3.1 WIDTH.
ACCESS AISLES SERVING VEHICLE PULL-UP SPACES SHALL BE 60 INCHES WIDE MINIMUM.

503.3.2 LENGTH.
ACCESS AISLES SHALL EXTEND THE FULL LENGTH OF THE VEHICLE PULL-UP SPACES THEY SERVE.

503.3.3 MARKING.
ACCESS AISLES SHALL BE MARKED SO AS TO DISCOURAGE PARKING IN THEM.

504 STAIRS

504.2 TREADS AND RISERS.
ALL STEPS ON A FLIGHT OF STAIRS SHALL HAVE UNIFORM RISER HEIGHTS AND UNIFORM TREAD DEPTHS. RISERS SHALL BE 4 INCHES HIGH MINIMUM AND 7 INCHES HIGH MAXIMUM. TREADS SHALL BE 11 INCHES DEEP MINIMUM.

504.3 OPEN RISERS.
OPEN RISERS ARE NOT PERMITTED.

504.5 NOSINGS.
THE RADIUS OF CURVATURE AT THE LEADING EDGE OF THE TREAD SHALL BE 1/2 INCH MAXIMUM. NOSINGS THAT PROJECT BEYOND RISERS SHALL HAVE THE UNDERSIDE OF THE LEADING EDGE CURVED OR BEVELED. RISERS SHALL BE PERMITTED TO SLOPE UNDER THE TREAD AT AN ANGLE OF 30 DEGREES MAXIMUM FROM VERTICAL. THE PERMITTED PROJECTION OF THE NOSING SHALL EXTEND 1 1/2 INCHES MAXIMUM OVER THE TREAD BELOW.

505 HANDRAILS

505.4 HEIGHT.
TOP OF GRIPPING SURFACES OF HANDRAILS SHALL BE 34 INCHES MINIMUM AND 38 INCHES MAXIMUM VERTICALLY ABOVE WALKING SURFACES, STAIR NOSINGS, AND RAMP SURFACES. HANDRAILS SHALL BE AT A CONSISTENT HEIGHT ABOVE WALKING SURFACES, STAIR NOSINGS, AND RAMP SURFACES.

505.5 CLEARANCE.
CLEARANCE BETWEEN HANDRAIL GRIPPING SURFACES AND ADJACENT SURFACES SHALL BE 1 1/2 INCHES MINIMUM.

505.10.1 TOP AND BOTTOM EXTENSION AT RAMPS.
RAMP HANDRAILS SHALL EXTEND HORIZONTALLY ABOVE THE LANDING FOR 12 INCHES MINIMUM BEYOND THE TOP AND BOTTOM OF RAMP RUNS. EXTENSIONS SHALL RETURN TO A WALL, GUARD, OR THE LANDING SURFACE, OR SHALL BE CONTINUOUS TO THE HANDRAIL OF AN ADJACENT RAMP RUN.

505.10.2 TOP EXTENSION AT STAIRS.
AT THE TOP OF A STAIR FLIGHT, HANDRAILS SHALL EXTEND HORIZONTALLY ABOVE THE LANDING FOR 12 INCHES MINIMUM BEGINNING DIRECTLY ABOVE THE FIRST RISER NOSING. EXTENSIONS SHALL RETURN TO A WALL, GUARD, OR THE LANDING SURFACE, OR SHALL BE CONTINUOUS TO THE HANDRAIL OF AN ADJACENT STAIR FLIGHT.

505.10.3 BOTTOM EXTENSION AT STAIRS.
AT THE BOTTOM OF A STAIR FLIGHT, HANDRAILS SHALL EXTEND AT THE SLOPE OF THE STAIR FLIGHT FOR A HORIZONTAL DISTANCE AT LEAST EQUAL TO ONE TREAD DEPTH BEYOND THE LAST RISER NOSING. EXTENSION SHALL RETURN TO A WALL, GUARD, OR THE LANDING SURFACE, OR SHALL BE CONTINUOUS TO THE HANDRAIL OF AN ADJACENT STAIR FLIGHT.

602 DRINKING FOUNTAINS

602.2 CLEAR FLOOR SPACE.
UNITS SHALL HAVE A CLEAR FLOOR OR GROUND SPACE COMPLYING WITH 305 POSITIONED FOR A FORWARD APPROACH AND CENTERED ON THE UNIT. KNEE AND TOE CLEARANCE COMPLYING WITH 306 SHALL BE PROVIDED.

602.3 OPERABLE PARTS.
OPERABLE PARTS SHALL COMPLY WITH 309.

602.4 SPOUT HEIGHT.
SPOUT OUTLETS SHALL BE 36 INCHES MAXIMUM ABOVE THE FINISH FLOOR OR GROUND.

602.5 SPOUT LOCATION.
THE SPOUT SHALL BE LOCATED 15 INCHES MINIMUM FROM THE VERTICAL SUPPORT AND 5 INCHES MAXIMUM FROM THE FRONT EDGE OF THE UNIT, INCLUDING BUMPERS.

602.7 DRINKING FOUNTAINS FOR STANDING PERSONS.
SPOUT OUTLETS OF DRINKING FOUNTAINS FOR STANDING PERSONS SHALL BE 38 INCHES MINIMUM AND 43 INCHES MAXIMUM ABOVE THE FINISH FLOOR OR GROUND.

603 TOILET AND BATHING ROOMS

603.2.3 DOOR SWING.
DOORS SHALL NOT SWING INTO THE CLEAR FLOOR SPACE OR CLEARANCE REQUIRED FOR ANY FIXTURE. DOORS SHALL BE PERMITTED TO SWING INTO THE REQUIRED TURNING SPACE.

603.3 MIRRORS.
MIRRORS LOCATED ABOVE LAVATORIES OR COUNTERTOPS SHALL BE INSTALLED WITH THE BOTTOM EDGE OF THE REFLECTING SURFACE 40 INCHES MAXIMUM ABOVE THE FINISH FLOOR OR GROUND. MIRRORS NOT LOCATED ABOVE LAVATORIES OR COUNTERTOPS SHALL BE INSTALLED WITH THE BOTTOM EDGE OF THE REFLECTING SURFACE 35 INCHES MAXIMUM ABOVE THE FINISH FLOOR OR GROUND.

603.4 COAT HOOKS AND SHELVES.
COAT HOOKS SHALL BE LOCATED WITHIN ONE OF THE REACH RANGES SPECIFIED IN 308. SHELVES SHALL BE LOCATED 40 INCHES MINIMUM AND 48 INCHES MAXIMUM ABOVE THE FINISH FLOOR.

604 WATER CLOSETS AND TOILET COMPARTMENTS

604.2 LOCATION.
THE WATER CLOSET SHALL BE POSITIONED WITH A WALL OR PARTITION TO THE REAR AND TO ONE SIDE. THE CENTERLINE OF THE WATER CLOSET SHALL BE 16 INCHES MINIMUM TO 18 INCHES MAXIMUM FROM THE SIDE WALL OR PARTITION, EXCEPT THAT THE WATER CLOSET SHALL BE 17 INCHES MINIMUM AND 19 INCHES MAXIMUM FROM THE SIDE WALL OR PARTITION IN THE AMBULATORY ACCESSIBLE TOILET COMPARTMENT SPECIFIED IN 604.8.2. WATER CLOSETS SHALL BE ARRANGED FOR A LEFT-HAND OR RIGHT-HAND APPROACH.

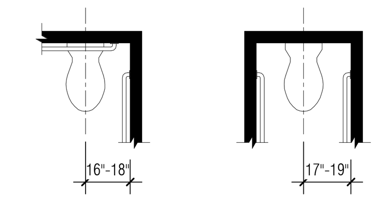

604.3.1 SIZE.
CLEARANCE AROUND A WATER CLOSET SHALL BE 60 INCHES MINIMUM MEASURED PERPENDICULAR FROM THE SIDE WALL AND 56 INCHES MINIMUM MEASURED PERPENDICULAR FROM THE REAR WALL.

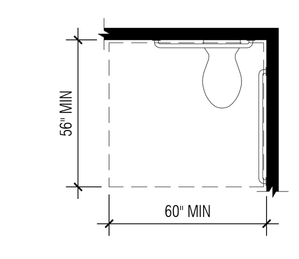

604.4 SEATS.
THE SEAT HEIGHT OF A WATER CLOSET ABOVE THE FINISH FLOOR SHALL BE 17 INCHES MINIMUM AND 19 INCHES MAXIMUM MEASURED TO THE TOP OF THE SEAT. SEATS SHALL NOT BE SPRUNG TO RETURN TO A LIFTED POSITION.

604.5 GRAB BARS.
GRAB BARS SHALL BE PROVIDED ON THE SIDE WALL CLOSEST TO THE WATER CLOSET AND ON THE REAR WALL.

604.5.1 SIDE WALL.
THE SIDE WALL GRAB BAR SHALL BE 42 INCHES LONG MINIMUM, LOCATED 12 INCHES MAXIMUM FROM THE REAR WALL AND EXTENDING 54 INCHES MINIMUM FROM THE REAR WALL.

604.5.2 REAR WALL.
THE REAR WALL GRAB BAR SHALL BE 36 INCHES LONG MINIMUM AND EXTEND FROM THE CENTERLINE OF THE WATER CLOSET 12 INCHES MINIMUM ON ONE SIDE AND 24 INCHES MINIMUM ON THE OTHER SIDE.

604.6 FLUSH CONTROLS.
FLUSH CONTROLS SHALL BE HAND OPERATED OR AUTOMATIC. HAND OPERATED FLUSH CONTROLS SHALL COMPLY WITH 309. FLUSH CONTROLS SHALL BE LOCATED ON THE OPEN SIDE OF THE WATER CLOSET.

604.7 DISPENSERS.
TOILET PAPER DISPENSERS SHALL COMPLY WITH 309.4 AND SHALL BE 7 INCHES MINIMUM AND 9 INCHES MAXIMUM IN FRONT OF THE WATER CLOSET MEASURED TO THE CENTERLINE OF THE DISPENSER. THE OUTLET OF THE DISPENSER SHALL BE 15 INCHES MINIMUM AND 48 INCHES MAXIMUM ABOVE THE FINISH FLOOR AND SHALL NOT BE LOCATED BEHIND GRAB BARS. DISPENSERS SHALL NOT BE OF A TYPE THAT CONTROLS DELIVERY OR THAT DOES NOT ALLOW CONTINUOUS PAPER FLOW.

604.8 TOILET COMPARTMENTS.

604.8.1.1 SIZE.
WHEELCHAIR ACCESSIBLE COMPARTMENTS SHALL BE 60 INCHES WIDE MINIMUM MEASURED PERPENDICULAR TO THE SIDE WALL, AND 56 INCHES DEEP MINIMUM FOR WALL HUNG WATER CLOSETS AND 59 INCHES DEEP MINIMUM FOR FLOOR MOUNTED WATER CLOSETS MEASURED PERPENDICULAR TO THE REAR WALL. WHEELCHAIR ACCESSIBLE COMPARTMENTS FOR CHILDREN'S USE SHALL BE 60 INCHES WIDE MINIMUM MEASURED PERPENDICULAR TO THE SIDE WALL, AND 59 INCHES DEEP MINIMUM FOR WALL HUNG AND FLOOR MOUNTED WATER CLOSETS MEASURED PERPENDICULAR TO THE REAR WALL.

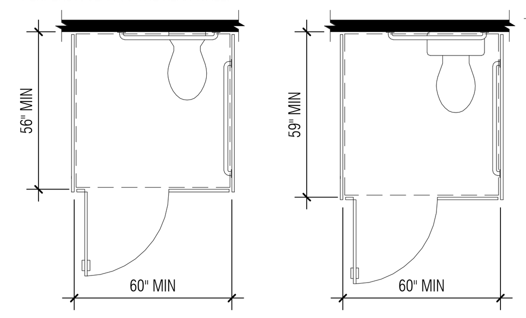

604.8.1.2 DOORS.
TOILET COMPARTMENT DOORS, INCLUDING DOOR HARDWARE, SHALL COMPLY WITH 404 EXCEPT THAT IF THE APPROACH IS TO THE LATCH SIDE OF THE COMPARTMENT DOOR, CLEARANCE BETWEEN THE DOOR SIDE OF THE COMPARTMENT AND ANY OBSTRUCTION SHALL BE 42 INCHES MINIMUM. DOORS SHALL BE LOCATED IN THE FRONT PARTITION OR IN THE SIDE WALL OR PARTITION FARTHEST FROM THE WATER CLOSET. WHERE LOCATED IN THE FRONT PARTITION, THE DOOR OPENING SHALL BE 4 INCHES MAXIMUM FROM THE SIDE WALL OR PARTITION FARTHEST FROM THE WATER CLOSET. WHERE LOCATED IN THE SIDE WALL OR PARTITION, THE DOOR OPENING SHALL BE 4 INCHES MAXIMUM FROM THE FRONT PARTITION. THE DOOR SHALL BE SELF-CLOSING. TOILET COMPARTMENT DOORS SHALL NOT SWING INTO THE MINIMUM REQUIRED COMPARTMENT AREA.

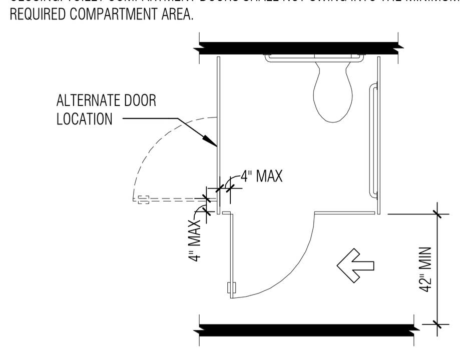

604.8.1.3 APPROACH.
COMPARTMENTS SHALL BE ARRANGED FOR LEFT-HAND OR RIGHT-HAND APPROACH TO THE WATER CLOSET.

604.8.1.4 TOE CLEARANCE.
THE FRONT PARTITION AND AT LEAST ONE SIDE PARTITION SHALL PROVIDE A TOE CLEARANCE OF 9 INCHES MINIMUM ABOVE THE FINISH FLOOR AND 6 INCHES DEEP MINIMUM BEYOND THE COMPARTMENT-SIDE FACE OF THE PARTITION, EXCLUSIVE OF PARTITION SUPPORT MEMBERS. COMPARTMENTS FOR CHILDREN'S USE SHALL PROVIDE A TOE CLEARANCE OF 12 INCHES MINIMUM ABOVE THE FINISH FLOOR.

604.8.1.5 GRAB BARS.
A SIDE-WALL GRAB BAR SHALL BE PROVIDED AND SHALL BE LOCATED ON THE WALL CLOSEST TO THE WATER CLOSET. IN ADDITION, A REAR-WALL GRAB BAR SHALL BE PROVIDED.

604.8.2 AMBULATORY ACCESSIBLE COMPARTMENTS.

604.8.2.1 SIZE.
AMBULATORY ACCESSIBLE COMPARTMENTS SHALL HAVE A DEPTH OF 60 INCHES MINIMUM AND A WIDTH OF 35 INCHES MINIMUM AND 37 INCHES MAXIMUM.

604.8.2.2 DOORS.
TOILET COMPARTMENT DOORS, INCLUDING DOOR HARDWARE, SHALL COMPLY WITH 404, EXCEPT THAT IF THE APPROACH IS TO THE LATCH SIDE OF THE COMPARTMENT DOOR, CLEARANCE BETWEEN THE DOOR SIDE OF THE COMPARTMENT AND ANY OBSTRUCTION SHALL BE 42 INCHES MINIMUM. THE DOOR SHALL BE SELFCLOSING. TOILET COMPARTMENT DOORS SHALL NOT SWING INTO THE MINIMUM REQUIRED COMPARTMENT AREA.

604.8.2.3 GRAB BARS.
A SIDE-WALL GRAB BAR SHALL BE PROVIDED ON BOTH SIDES OF THE COMPARTMENT.

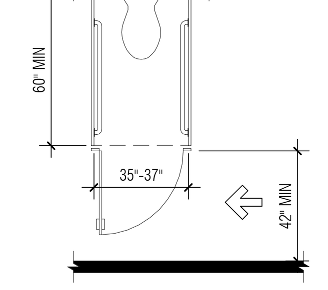

604.8.3 COAT HOOKS AND SHELVES.
COAT HOOKS SHALL BE LOCATED WITHIN ONE OF THE REACH RANGES SPECIFIED IN 308. SHELVES SHALL BE LOCATED 40 INCHES MINIMUM AND 48 INCHES MAXIMUM ABOVE THE FINISH FLOOR.

605 URINALS

605.2 HEIGHT AND DEPTH.
URINALS SHALL BE THE STALL-TYPE OR THE WALL-HUNG TYPE WITH THE RIM 17 INCHES MAXIMUM ABOVE THE FINISH FLOOR OR GROUND. URINALS SHALL BE 13 1/2 INCHES DEEP MINIMUM MEASURED FROM THE OUTER FACE OF THE URINAL RIM TO THE BACK OF THE FIXTURE.

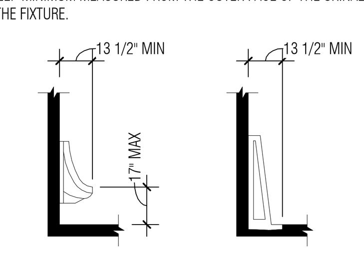

605.3 CLEAR FLOOR SPACE.
A CLEAR FLOOR OR GROUND SPACE COMPLYING WITH 305 POSITIONED FOR FORWARD APPROACH SHALL BE PROVIDED.

605.4 FLUSH CONTROLS.
FLUSH CONTROLS SHALL BE HAND OPERATED OR AUTOMATIC. HAND OPERATED FLUSH CONTROLS SHALL COMPLY WITH 309.

606 LAVATORIES AND SINKS

606.2 CLEAR FLOOR SPACE.
A CLEAR FLOOR SPACE COMPLYING WITH 305, POSITIONED FOR A FORWARD APPROACH, AND KNEE AND TOE CLEARANCE COMPLYING WITH 306 SHALL BE PROVIDED.

606.3 HEIGHT.
LAVATORIES AND SINKS SHALL BE INSTALLED WITH THE FRONT OF THE HIGHER OF THE RIM OR COUNTER SURFACE 34 INCHES MAXIMUM ABOVE THE FINISH FLOOR OR GROUND.

606.4 FAUCETS.
CONTROLS FOR FAUCETS SHALL COMPLY WITH 309. HAND-OPERATED METERING FAUCETS SHALL REMAIN OPEN FOR 10 SECONDS MINIMUM.

606.5 EXPOSED PIPES AND SURFACES.
WATER SUPPLY AND DRAIN PIPES UNDER LAVATORIES AND SINKS SHALL BE INSULATED OR OTHERWISE CONFIGURED TO PROTECT AGAINST CONTACT. THERE SHALL BE NO SHARP OR ABRASIVE SURFACES UNDER LAVATORIES AND SINKS.

608 SHOWER COMPARTMENTS

608.2.1 TRANSFER TYPE SHOWER COMPARTMENTS.
TRANSFER TYPE SHOWER COMPARTMENTS SHALL BE 36 INCHES BY 36 INCHES CLEAR INSIDE DIMENSIONS MEASURED AT THE CENTER POINTS OF OPPOSING SIDES AND SHALL HAVE A 36 INCH WIDE MINIMUM ENTRY ON THE FACE OF THE SHOWER COMPARTMENT. CLEARANCE OF 36 INCHES WIDE MINIMUM BY 48 INCHES LONG MINIMUM MEASURED FROM THE CONTROL WALL SHALL BE PROVIDED.

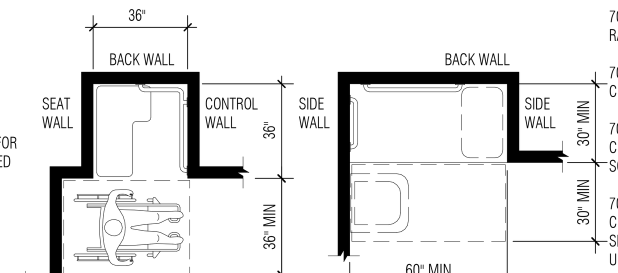

608.2.2 STANDARD ROLL-IN TYPE SHOWER COMPARTMENTS.
STANDARD ROLL-IN TYPE SHOWER COMPARTMENTS SHALL BE 30 INCHES WIDE MINIMUM BY 60 INCHES DEEP MINIMUM CLEAR INSIDE DIMENSIONS MEASURED AT CENTER POINTS OF OPPOSING SIDES AND SHALL HAVE A 60 INCHES WIDE MINIMUM ENTRY ON THE FACE OF THE SHOWER COMPARTMENT.

608.2.2.1 CLEARANCE.
A 30 INCH WIDE MINIMUM BY 60 INCH LONG MINIMUM CLEARANCE SHALL BE PROVIDED ADJACENT TO THE OPEN FACE OF THE SHOWER COMPARTMENT.

608.3.1 TRANSFER TYPE SHOWER COMPARTMENTS.
IN TRANSFER TYPE COMPARTMENTS, GRAB BARS SHALL BE PROVIDED ACROSS THE CONTROL WALL AND BACK WALL TO A POINT 18 INCHES FROM THE CONTROL WALL.

608.4 SEATS.
A FOLDING OR NON-FOLDING SEAT SHALL BE PROVIDED IN TRANSFER TYPE SHOWER COMPARTMENTS.

608.5 CONTROLS.
CONTROLS, FAUCETS, AND SHOWER SPRAY UNITS SHALL COMPLY WITH 309.4.

608.5.1 TRANSFER TYPE SHOWER COMPARTMENTS.
IN TRANSFER TYPE SHOWER COMPARTMENTS, THE CONTROLS, FAUCETS, AND SHOWER SPRAY UNIT SHALL BE INSTALLED ON THE SIDE WALL OPPOSITE THE SEAT 38 INCHES MINIMUM AND 48 INCHES MAXIMUM ABOVE THE SHOWER FLOOR AND SHALL BE LOCATED ON THE CONTROL WALL 15 INCHES MAXIMUM FROM THE CENTERLINE OF THE SEAT TOWARD THE SHOWER OPENING.

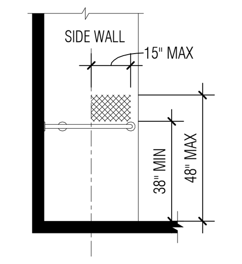

608.5.2 STANDARD ROLL-IN TYPE SHOWER COMPARTMENTS.
IN STANDARD ROLL-IN TYPE SHOWER COMPARTMENTS, THE CONTROLS, FAUCETS, AND SHOWER SPRAY UNIT SHALL BE LOCATED ABOVE THE GRAB BAR, BUT NO HIGHER THAN 48 INCHES ABOVE THE SHOWER FLOOR. WHERE A SEAT IS PROVIDED, THE CONTROLS, FAUCETS, AND SHOWER SPRAY UNIT SHALL BE INSTALLED ON THE BACK WALL ADJACENT TO THE SEAT WALL AND SHALL BE LOCATED 27 INCHES MAXIMUM FROM THE SEAT WALL.

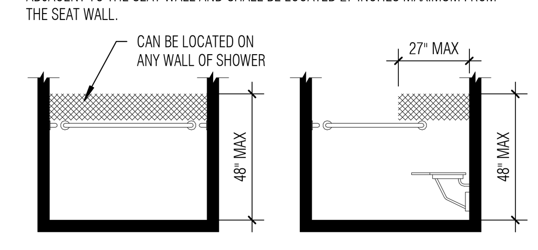

608.7 THRESHOLDS.
THRESHOLDS IN ROLL-IN TYPE SHOWER COMPARTMENTS SHALL BE 1/2 INCH HIGH MAXIMUM IN ACCORDANCE WITH 303. IN TRANSFER TYPE SHOWER COMPARTMENTS, THRESHOLDS 1/2 INCH HIGH MAXIMUM SHALL BE BEVELED, ROUNDED, OR VERTICAL.

609 GRAB BARS

609.2.1 CIRCULAR CROSS SECTION.
GRAB BARS WITH CIRCULAR CROSS SECTIONS SHALL HAVE AN OUTSIDE DIAMETER OF 1 1/4 INCHES MINIMUM AND 2 INCHES MAXIMUM.

609.2.2 NON-CIRCULAR CROSS SECTION.
GRAB BARS WITH NON-CIRCULAR CROSS SECTIONS SHALL HAVE A CROSSSECTION DIMENSION OF 2 INCHES MAXIMUM AND A PERIMETER DIMENSION OF 4 INCHES MINIMUM AND 4.8 INCHES MAXIMUM.

609.3 SPACING.
THE SPACE BETWEEN THE WALL AND THE GRAB BAR SHALL BE 1 1/2 INCHES. THE SPACE BETWEEN THE GRAB BAR AND PROJECTING OBJECTS BELOW AND AT THE ENDS SHALL BE 1 1/2 INCHES MINIMUM. THE SPACE BETWEEN THE GRAB BAR AND PROJECTING OBJECTS ABOVE SHALL BE 12 INCHES MINIMUM.

609.4 POSITION OF GRAB BARS.
GRAB BARS SHALL BE INSTALLED IN A HORIZONTAL POSITION, 33 INCHES MINIMUM AND 36 INCHES MAXIMUM ABOVE THE FINISH FLOOR MEASURED TO THE TOP OF THE GRIPPING SURFACE.

609.5 SURFACE HAZARDS.
GRAB BARS AND ANY WALL OR OTHER SURFACES ADJACENT TO GRAB BARS SHALL BE FREE OF SHARP OR ABRASIVE ELEMENTS AND SHALL HAVE ROUNDED EDGES.

609.6 FITTINGS.
GRAB BARS SHALL NOT ROTATE WITHIN THEIR FITTINGS.

609.7 INSTALLATION.
GRAB BARS SHALL BE INSTALLED IN ANY MANNER THAT PROVIDES A GRIPPING SURFACE AT THE SPECIFIED LOCATIONS AND THAT DOES NOT OBSTRUCT THE REQUIRED CLEAR FLOOR SPACE.

609.8 STRUCTURAL STRENGTH.
ALLOWABLE STRESSES SHALL NOT BE EXCEEDED FOR MATERIALS USED WHEN A VERTICAL OR HORIZONTAL FORCE OF 250 POUNDS IS APPLIED AT ANY POINT ON THE GRAB BAR, FASTENER, MOUNTING DEVICE, OR SUPPORTING STRUCTURE.

610 SEATS

610.2 BATHTUB SEATS.
THE TOP OF BATHTUB SEATS SHALL BE 17 INCHES MINIMUM AND 19 INCHES MAXIMUM ABOVE THE BATHROOM FINISH FLOOR. THE DEPTH OF A REMOVABLE IN-TUB SEAT SHALL BE 15 INCHES MINIMUM AND 16 INCHES MAXIMUM. THE SEAT SHALL BE CAPABLE OF SECURE PLACEMENT. PERMANENT SEATS AT THE HEAD END OF THE BATHTUB SHALL BE 15 INCHES DEEP MINIMUM AND SHALL EXTEND FROM THE BACK WALL TO OR BEYOND THE OUTER EDGE OF THE BATHTUB.

610.3 SHOWER COMPARTMENT SEATS.
WHERE A SEAT IS PROVIDED IN A STANDARD ROLL-IN SHOWER COMPARTMENT, IT SHALL BE A FOLDING TYPE, SHALL BE INSTALLED ON THE SIDE WALL ADJACENT TO THE CONTROLS, AND SHALL EXTEND FROM THE BACK WALL TO A POINT WITHIN 3 INCHES OF THE COMPARTMENT ENTRY. IN TRANSFER-TYPE SHOWERS, THE SEAT SHALL EXTEND FROM THE BACK WALL TO A POINT WITHIN 3 INCHES OF THE COMPARTMENT ENTRY. THE TOP OF THE
SEAT SHALL BE 17 INCHES MINIMUM AND 19 INCHES MAXIMUM ABOVE THE BATHROOM FINISH FLOOR.

610.3.1 RECTANGULAR SEATS.
THE REAR EDGE OF A RECTANGULAR SEAT SHALL BE 2 1/2 INCHES MAXIMUM AND THE FRONT EDGE 15 INCHES MINIMUM AND 16 INCHES MAXIMUM FROM THE SEAT WALL. THE SIDE EDGE OF THE SEAT SHALL BE 1 1/2 INCHES MAXIMUM FROM THE ADJACENT WALL.

610.3.2 L-SHAPED SEATS.
THE REAR EDGE OF AN L-SHAPED SEAT SHALL BE 2 1/2 INCHES MAXIMUM AND THE FRONT EDGE 15 INCHES MINIMUM AND 16 INCHES MAXIMUM FROM THE SEAT WALL. THE REAR EDGE OF THE "L" PORTION OF THE SEAT SHALL BE 1 1/2 INCHES MAXIMUM FROM THE WALL AND THE FRONT EDGE SHALL BE 14 INCHES MINIMUM AND 15 INCHES MAXIMUM FROM THE WALL. THE END OF THE "L" SHALL BE 22 INCHES MINIMUM AND 23 INCHES MAXIMUM FROM THE MAIN SEAT WALL.

610.4 STRUCTURAL STRENGTH.
ALLOWABLE STRESSES SHALL NOT BE EXCEEDED FOR MATERIALS USED WHEN A VERTICAL OR HORIZONTAL FORCE OF 250 POUNDS IS APPLIED AT ANY POINT ON THE SEAT, FASTENER, MOUNTING DEVICE, OR SUPPORTING STRUCTURE.

702 FIRE ALARM SYSTEMS

702.1 GENERAL.
FIRE ALARM SYSTEMS SHALL HAVE PERMANENTLY INSTALLED AUDIBLE AND VISIBLE ALARMS COMPLYING WITH NFPA 72 (1999 OR 2002 EDITION) (INCORPORATED BY REFERENCE, SEE "REFERENCED STANDARDS" IN CHAPTER 1), EXCEPT THAT THE MAXIMUM ALLOWABLE SOUND LEVEL OF AUDIBLE NOTIFICATION APPLIANCES COMPLYING WITH SECTION 4-3.2.1 OF NFPA 72 (1999 EDITION) SHALL HAVE A SOUND LEVEL NO MORE THAN 110 DB AT THE MINIMUM HEARING DISTANCE FROM THE AUDIBLE APPLIANCE. IN ADDITION, ALARMS IN GUEST ROOMS REQUIRED TO PROVIDE COMMUNICATION FEATURES SHALL COMPLY WITH SECTIONS 4-3 AND 4-4 OF NFPA 72 (1999 EDITION) OR SECTIONS 7.4 AND 7.5 OF NFPA 72 (2002 EDITION).

703 SIGNS

703.1 GENERAL.
WHERE BOTH VISUAL AND TACTILE CHARACTERS ARE REQUIRED, EITHER ONE SIGN WITH BOTH VISUAL AND TACTILE CHARACTERS, OR TWO SEPARATE SIGNS, ONE WITH VISUAL, AND ONE WITH TACTILE CHARACTERS, SHALL BE PROVIDED.

703.2 RAISED CHARACTERS.

703.2.1 DEPTH.
RAISED CHARACTERS SHALL BE 1/32 INCH MINIMUM ABOVE THEIR BACKGROUND.

703.2.2 CASE.
CHARACTERS SHALL BE UPPERCASE.

703.2.3 STYLE.
CHARACTERS SHALL BE SANS SERIF. CHARACTERS SHALL NOT BE ITALIC, OBLIQUE, SCRIPT, HIGHLY DECORATIVE, OR OF OTHER UNUSUAL FORMS.

703.2.5 CHARACTER HEIGHT.
CHARACTER HEIGHT MEASURED VERTICALLY FROM THE BASELINE OF THE CHARACTER SHALL BE 5/8 INCH MINIMUM AND 2 INCHES MAXIMUM BASED ON THE HEIGHT OF THE UPPERCASE LETTER "I".

703.3 BRAILLE.
BRAILLE SHALL BE CONTRACTED (GRADE 2).

703.3.1 DIMENSIONS AND CAPITALIZATION.
BRAILLE DOTS SHALL HAVE A DOMED OR ROUNDED SHAPE. THE INDICATION OF AN UPPERCASE LETTER OR LETTERS SHALL ONLY BE USED BEFORE THE FIRST WORD OF SENTENCES, PROPER NOUNS AND NAMES, INDIVIDUAL LETTERS OF THE ALPHABET, INITIALS, AND ACRONYMS.

703.3.2 POSITION.
BRAILLE SHALL BE POSITIONED BELOW THE CORRESPONDING TEXT. IF TEXT IS MULTI-LINED, BRAILLE SHALL BE PLACED BELOW THE ENTIRE TEXT. BRAILLE SHALL BE SEPARATED 3/8 INCH MINIMUM FROM ANY OTHER TACTILE CHARACTERS AND 3/8 INCH MINIMUM FROM RAISED BORDERS AND DECORATIVE ELEMENTS.

703.4.1 HEIGHT ABOVE FINISH FLOOR OR GROUND.
TACTILE CHARACTERS ON SIGNS SHALL BE LOCATED 48 INCHES MINIMUM ABOVE THE FINISH FLOOR OR GROUND SURFACE, MEASURED FROM THE BASELINE OF THE LOWEST TACTILE CHARACTER AND 60 INCHES MAXIMUM ABOVE THE FINISH FLOOR OR GROUND SURFACE, MEASURED FROM THE BASELINE OF THE HIGHEST TACTILE CHARACTER.

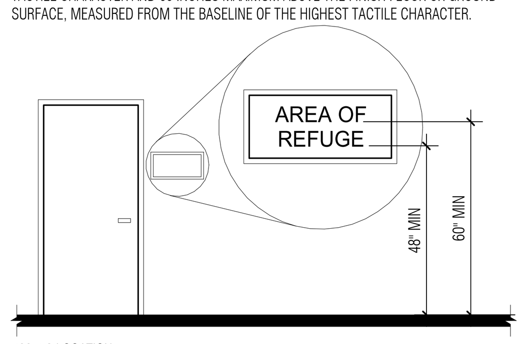

703.4.2 LOCATION.
WHERE A TACTILE SIGN IS PROVIDED AT A DOOR, THE SIGN SHALL BE LOCATED ALONGSIDE THE DOOR AT THE LATCH SIDE. WHERE A TACTILE SIGN IS PROVIDED AT DOUBLE DOORS WITH ONE ACTIVE LEAF, THE SIGN SHALL BE LOCATED ON THE INACTIVE LEAF. WHERE A TACTILE SIGN IS PROVIDED AT DOUBLE DOORS WITH TWO ACTIVE LEAFS, THE SIGN SHALL BE LOCATED TO THE RIGHT OF THE RIGHT HAND DOOR. WHERE THERE IS NO WALL SPACE AT THE LATCH SIDE OF A SINGLE DOOR OR AT THE RIGHT SIDE OF DOUBLE DOORS, SIGNS SHALL BE LOCATED ON THE NEAREST ADJACENT WALL. SIGNS CONTAINING TACTILE CHARACTERS SHALL BE LOCATED SO THAT A CLEAR FLOOR SPACE OF 18 INCHES MINIMUM BY 18 INCHES MINIMUM, CENTERED ON THE TACTILE CHARACTERS, IS PROVIDED BEYOND THE ARC OF ANY DOOR SWING BETWEEN THE CLOSED POSITION AND 45 DEGREE OPEN POSITION.

703.6 PICTOGRAMS.

703.6.1 PICTOGRAM FIELD.
PICTOGRAMS SHALL HAVE A FIELD HEIGHT OF 6 INCHES MINIMUM. CHARACTERS AND BRAILLE SHALL NOT BE LOCATED IN THE PICTOGRAM FIELD.

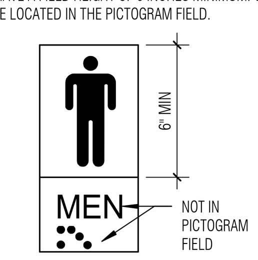

703.6.2 FINISH AND CONTRAST.
PICTOGRAMS AND THEIR FIELD SHALL HAVE A NON-GLARE FINISH. PICTOGRAMS SHALL CONTRAST WITH THEIR FIELD WITH EITHER A LIGHT PICTOGRAM ON A DARK FIELD OR A DARK PICTOGRAM ON A LIGHT FIELD.

705 DETECTABLE WARNINGS

705.1 GENERAL.
DETECTABLE WARNINGS SHALL CONSIST OF A SURFACE OF TRUNCATED DOMES.

705.1.1 DOME SIZE.
TRUNCATED DOMES IN A DETECTABLE WARNING SURFACE SHALL HAVE A BASE DIAMETER OF 0.9 INCH MINIMUM AND 1.4 INCHES MAXIMUM, A TOP DIAMETER OF 50 PERCENT OF THE BASE DIAMETER MINIMUM TO 65 PERCENT OF THE BASE DIAMETER MAXIMUM, AND A HEIGHT OF 0.2 INCH.

705.1.2 DOME SPACING.
TRUNCATED DOMES IN A DETECTABLE WARNING SURFACE SHALL HAVE A CENTER-TOCENTER SPACING OF 1.6 INCHES MINIMUM AND 2.4 INCHES MAXIMUM, AND A BASE-TOBASE SPACING OF 0.65 INCH MINIMUM, MEASURED BETWEEN THE MOST ADJACENT DOMES ON A SQUARE GRID.

705.1.3 CONTRAST.
DETECTABLE WARNING SURFACES SHALL CONTRAST VISUALLY WITH ADJACENT WALKING SURFACES EITHER LIGHT-ON-DARK, OR DARK-ON-LIGHT.

705.2 PLATFORM EDGES.
DETECTABLE WARNING SURFACES AT PLATFORM BOARDING EDGES SHALL BE 24 INCHES WIDE AND SHALL EXTEND THE FULL LENGTH OF THE PUBLIC USE AREAS OF THE PLATFORM.

802 WHEELCHAIR SPACES, COMPANION SEATS, AND DESIGNATED AISLE SEATS

802.1.2 WIDTH.
A SINGLE WHEELCHAIR SPACE SHALL BE 36 INCHES WIDE MINIMUM WHERE TWO ADJACENT WHEELCHAIR SPACES ARE PROVIDED, EACH WHEELCHAIR SPACE SHALL BE 33 INCHES WIDE MINIMUM.

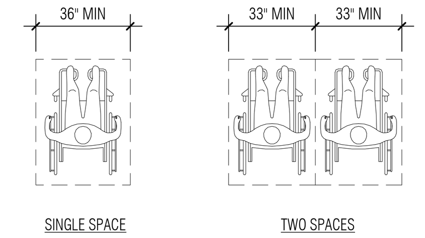

802.1.3 DEPTH.
WHERE A WHEELCHAIR SPACE CAN BE ENTERED FROM THE FRONT OR REAR, THE WHEELCHAIR SPACE SHALL BE 48 INCHES DEEP MINIMUM. WHERE A WHEELCHAIR SPACE CAN BE ENTERED ONLY FROM THE SIDE, THE WHEELCHAIR SPACE SHALL BE 60 INCHES DEEP MINIMUM.

803 DRESSING, FITTING AND LOCKER ROOMS

803.3 DOOR SWING.
DOORS SHALL NOT SWING INTO THE ROOM UNLESS A CLEAR FLOOR OR GROUND SPACE COMPLYING WITH 305.3 IS PROVIDED BEYOND THE ARC OF THE DOOR SWING.

803.4 BENCHES.
A BENCH COMPLYING WITH 903 SHALL BE PROVIDED WITHIN THE ROOM.

803.5 COAT HOOKS AND SHELVES.
COAT HOOKS PROVIDED WITHIN THE ROOM SHALL BE LOCATED WITHIN ONE OF THE REACH RANGES SPECIFIED IN 308. SHELVES SHALL BE 40 INCHES MINIMUM AND 48 INCHES MAXIMUM ABOVE THE FINISH FLOOR OR GROUND.

804 KITCHENS AND KITCHENETTES

804.3.2 HEIGHT.
THE KITCHEN WORK SURFACE SHALL BE 34 INCHES MAXIMUM ABOVE THE FINISH FLOOR OR GROUND.

804.4 SINKS.
SINKS SHALL COMPLY WITH 606.

804.5 STORAGE.
AT LEAST 50 PERCENT OF SHELF SPACE IN STORAGE FACILITIES SHALL COMPLY WITH AT LEAST ONE OF THE REACH RANGES SPECIFIED IN 308.

902 DINING SURFACES AND WORK SURFACES

902.3 HEIGHT.
THE TOPS OF DINING SURFACES AND WORK SURFACES SHALL BE 28 INCHES MINIMUM AND 34 INCHES MAXIMUM ABOVE THE FINISH FLOOR OR GROUND.

902.4.1 CLEAR FLOOR OR GROUND SPACE.
A CLEAR FLOOR SPACE COMPLYING WITH 305 POSITIONED FOR FORWARD APPROACH SHALL BE PROVIDED. KNEE AND TOE CLEARANCE COMPLYING WITH 306 SHALL BE PROVIDED, EXCEPT THAT KNEE CLEARANCE 24 INCHES MINIMUM ABOVE THE FINISH FLOOR OR GROUND SHALL BE PERMITTED.

902.4.2 HEIGHT.
THE TOPS OF TABLES AND COUNTERS SHALL BE 26 INCHES MINIMUM AND 30 INCHES MAXIMUM ABOVE THE FINISH FLOOR OR GROUND.

903 BENCHES

903.2 CLEAR FLOOR OR GROUND SPACE.
CLEAR FLOOR OR GROUND SPACE COMPLYING WITH 305 SHALL BE PROVIDED AND SHALL BE POSITIONED AT THE END OF THE BENCH SEAT AND PARALLEL TO THE SHORT AXIS OF THE BENCH.

903.3 SIZE.
BENCHES SHALL HAVE SEATS THAT ARE 42 INCHES LONG MINIMUM AND 20 INCHES DEEP MINIMUM AND 24 INCHES DEEP MAXIMUM.

903.4 BACK SUPPORT.
THE BENCH SHALL PROVIDE FOR BACK SUPPORT OR SHALL BE AFFIXED TO A WALL. BACK SUPPORT SHALL BE 42 INCHES LONG MINIMUM AND SHALL EXTEND FROM A POINT 2 INCHES MAXIMUM ABOVE THE SEAT SURFACE TO A POINT 18 INCHES MINIMUM ABOVE THE SEAT SURFACE. BACK SUPPORT SHALL BE 2 1/2 INCHES MAXIMUM FROM THE REAR EDGE OF THE SEAT MEASURED HORIZONTALLY.

903.5 HEIGHT.
THE TOP OF THE BENCH SEAT SURFACE SHALL BE 17 INCHES MINIMUM AND 19 INCHES MAXIMUM ABOVE THE FINISH FLOOR OR GROUND.

903.6 STRUCTURAL STRENGTH.
ALLOWABLE STRESSES SHALL NOT BE EXCEEDED FOR MATERIALS USED WHEN A VERTICAL OR HORIZONTAL FORCE OF 250 POUNDS IS APPLIED AT ANY POINT ON THE SEAT, FASTENER, MOUNTING DEVICE, OR SUPPORTING STRUCTURE.

903.7 WET LOCATIONS.
WHERE INSTALLED IN WET LOCATIONS, THE SURFACE OF THE SEAT SHALL BE SLIP RESISTANT AND SHALL NOT ACCUMULATE WATER.

THE PROVIDED INFORMATION IS CONDENSED FROM THE 2012 TEXAS ACCESSIBILITY STANDARDS (TAS) OF THE TEXAS GOVERNMENT CODE, CHAPTER 469, EFFECTIVE MARCH 15, 2012. IT IS INTENDED AS AN AID IN THE CONSTRUCTION OF ACCESSIBLE ELEMENTS AND SPACES. NOTIFY ARCHITECT OF ANY DISCREPANCIES DISCOVERED BETWEEN THESE GUIDELINES AND THE CONTRACT DOCUMENTS FOR DIRECTION.

THE ENTIRE TEXT OF THE TEXAS ACCESSIBILITY SHOULD BE CONSULTED AND IS AVAILABLE FROM T.D.L.R. AND ON THE INTERNET AT: WWW.LICENSE.STATE.TX.US.

Architect: Brinkley Sargent Wiginton Architects (972) 960-9970
Landscape: Kendall Landscape Architecture (214) 739-3226
Structural: L.A. Fuess Partners, Inc (214) 593-1118
MEP: M-E Engineers (214) 741-1589
Civil: KSA Engineers, Inc (903) 236-7700
Technology: M-E Engineers (303) 421-6656

BRINKLEY SARGENT WIGINTON ARCHITECTS

LONGVIEW POLICE DEPARTMENT

518 W. SOUTH ST. LONGVIEW, TEXAS 75601

HISTORY

#	DATE	DESCRIPTION

REGISTERED ARCHITECT HAROLD E. SARGENT 9941 STATE OF TEXAS
08/19/2020

TEXAS ACCESSIBILITY STANDARDS (TAS)

21719
08/19/2020
A000

BID ISSUE

8/18/2020 11:14:55 AM
D:\Revit Locals\LPD_CENTRAL_A19_bcocherer_08-18-2020.rvt

© 2020 Brinkley Sargent Wigginton Architects, Inc.

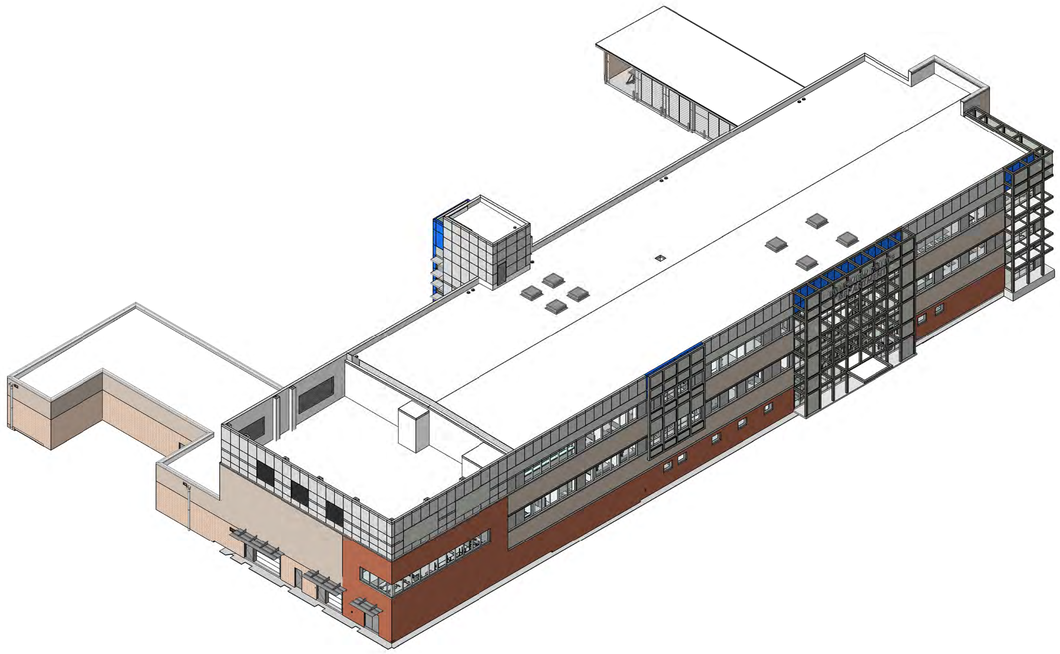

1 3D-NORTHEAST CORNER
SCALE:

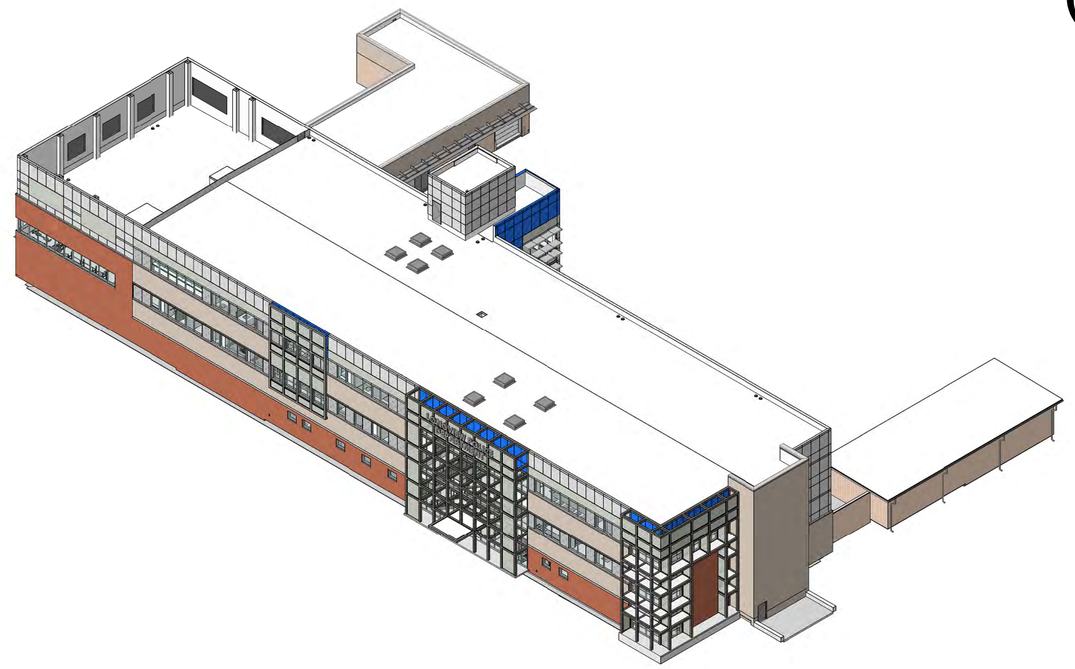

2 3D-NORTHWEST CORNER
SCALE:

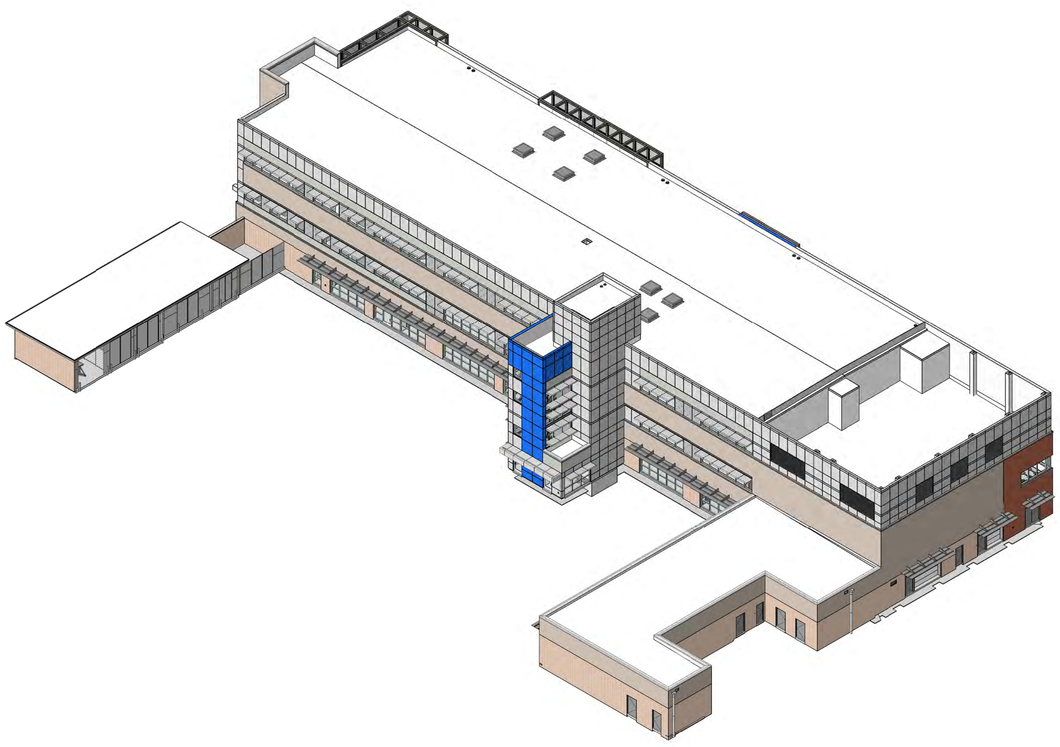

3 3D-SOUTHEAST CORNER
SCALE:

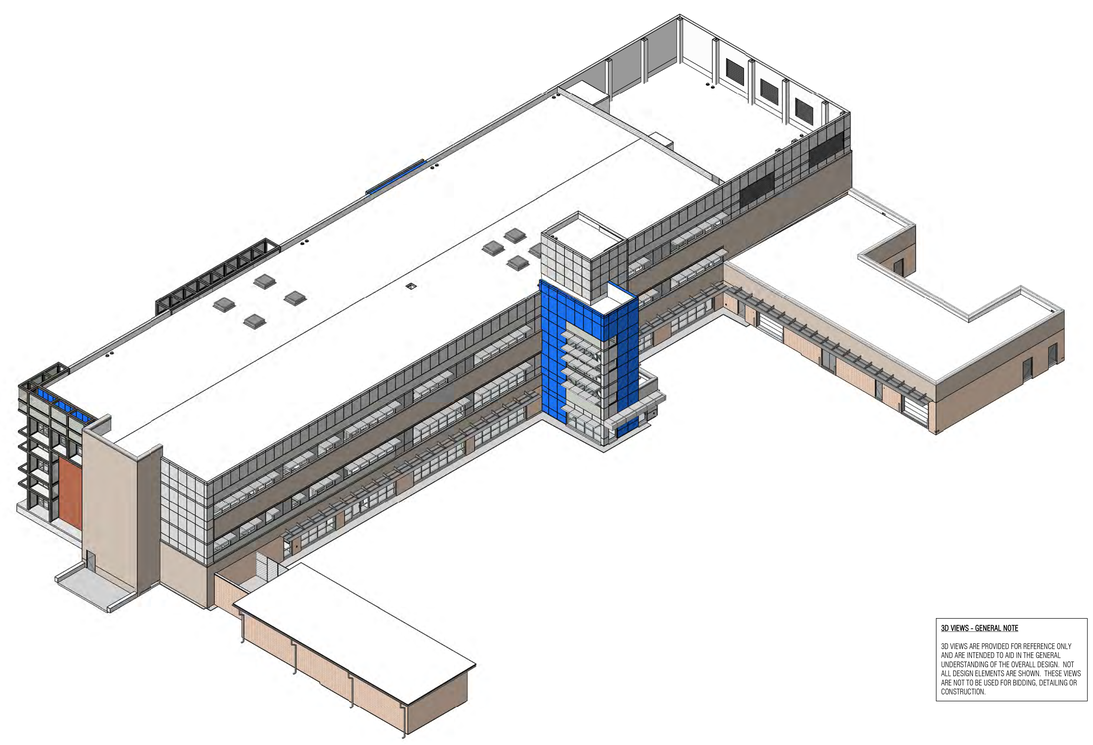

4 3D-SOUTHWEST CORNER
SCALE:

3D VIEWS - GENERAL NOTE

3D VIEWS ARE PROVIDED FOR REFERENCE ONLY AND ARE INTENDED TO AID IN THE GENERAL UNDERSTANDING OF THE OVERALL DESIGN. NOT ALL DESIGN ELEMENTS ARE SHOWN. THESE VIEWS ARE NOT TO BE USED FOR BIDDING, DETAILING OR CONSTRUCTION.

Architect: Brinkley Sargent Wigginton Architects (972) 960-9970
Landscape: Kendall Landscape Architecture (214) 739-3226
Structural: L.A. Fuess Partners, Inc (214) 593-1118
MEP: M-E Engineers (214) 741-1589
Civil: KSA Engineers, Inc (903) 236-7700
Technology: M-E Engineers (303) 421-6656

BRINKLEY SARGENT WIGGINTON ARCHITECTS

LONGVIEW POLICE DEPARTMENT

518 W. SOUTH ST. LONGVIEW, TEXAS 75601

HISTORY

#	DATE	DESCRIPTION

REGISTERED ARCHITECT 9941 STATE OF TEXAS
08/19/2020

3D - AXONS

21719
08/19/2020

A001

BID ISSUE

8/19/2020 11:17:28 AM

D:\Revit Local\LPD_CENTRAL_A19_Jacobsen_08-19-2020.rvt

© 2020 Brinkley Sargent Wigginton Architects, Inc.

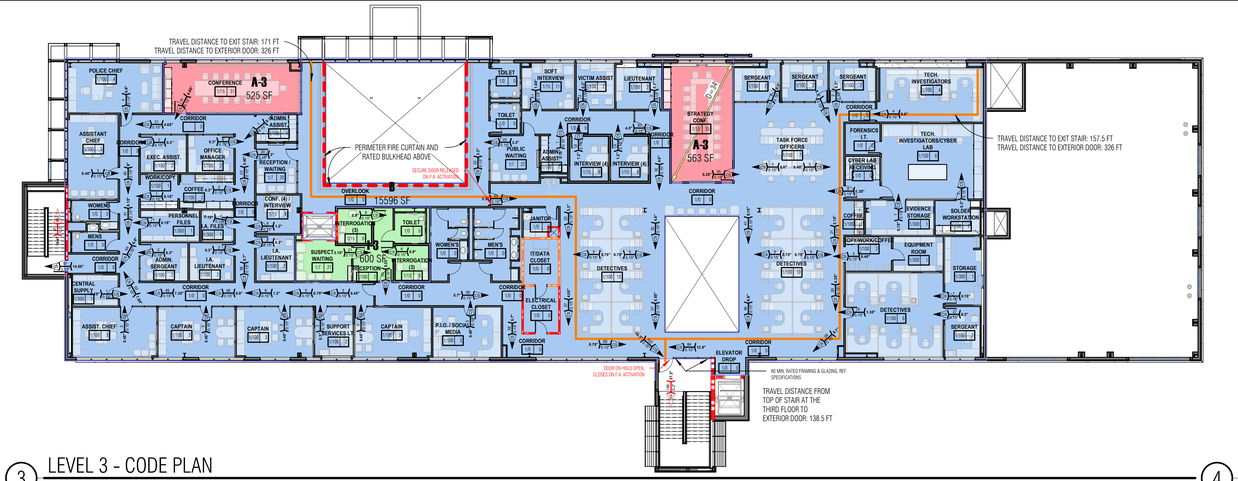

3 LEVEL 3 - CODE PLAN

SCALE: 1/16" = 1'-0"

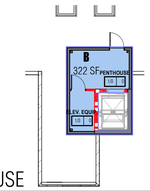

4 PENTHOUSE

SCALE: 1/16" = 1'-0"

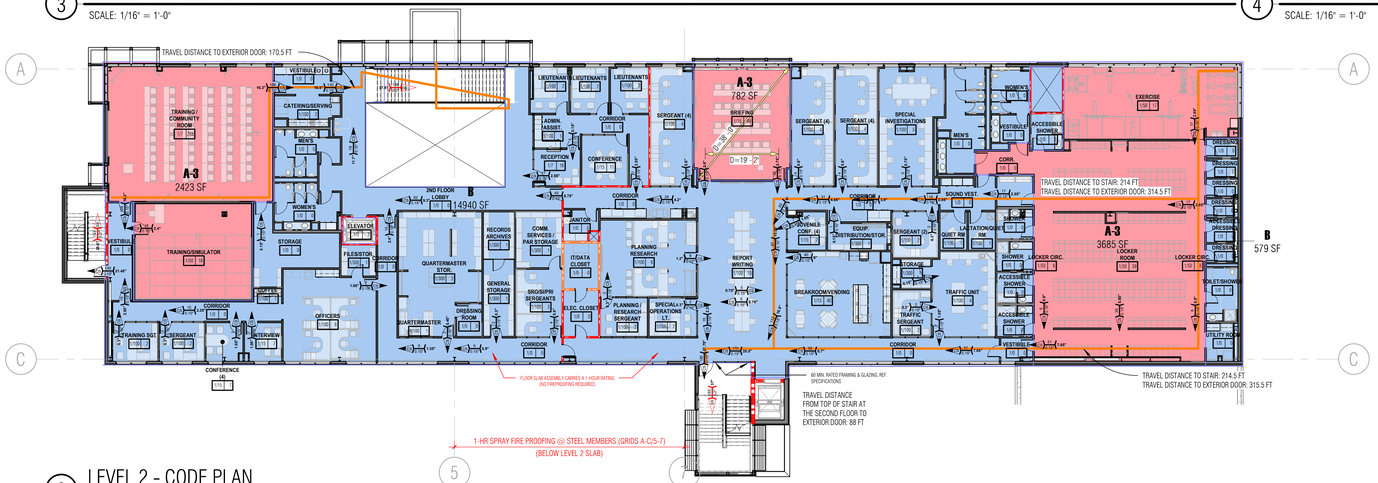

2 LEVEL 2 - CODE PLAN

SCALE: 1/16" = 1'-0"

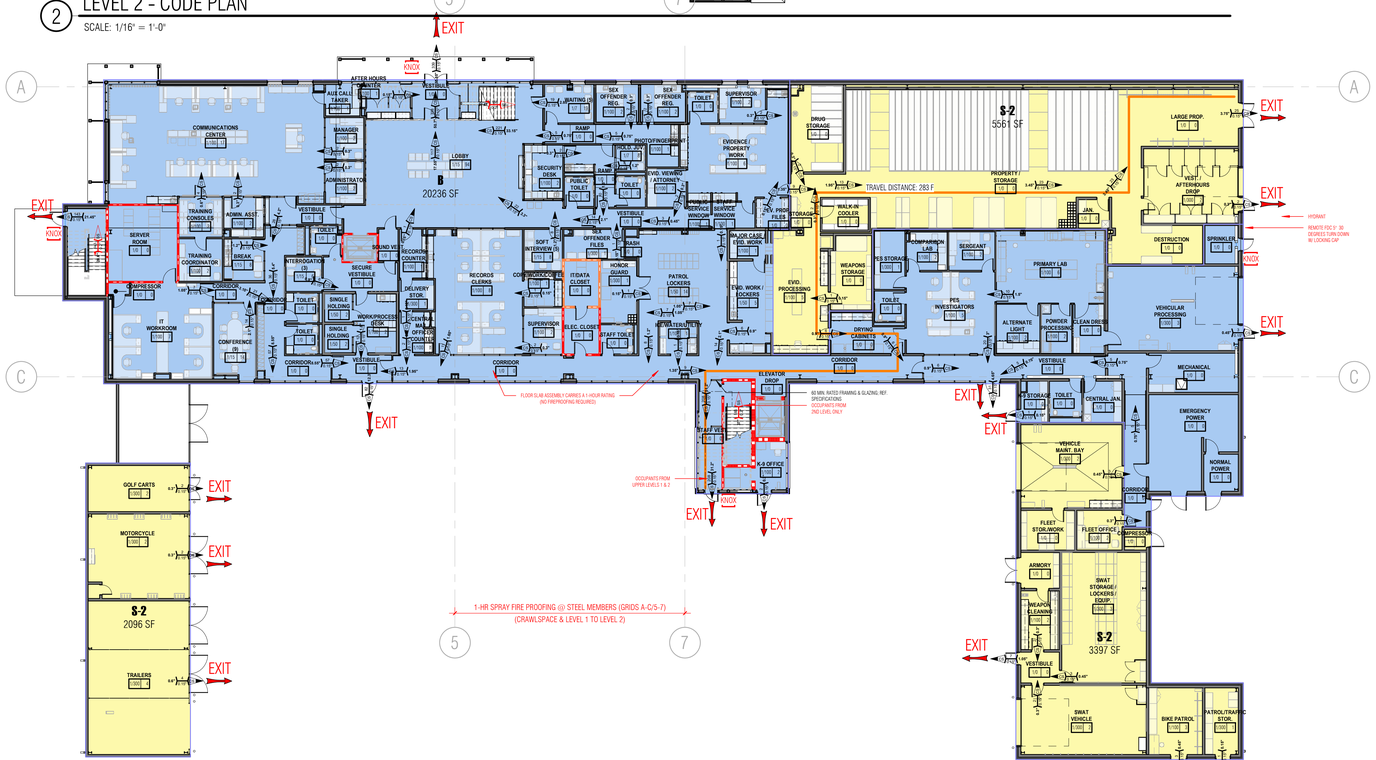

1 LEVEL 1 - CODE PLAN

SCALE: 1/16" = 1'-0"

PROJECT INFORMATION

LONGVIEW POLICE DEPARTMENT
518 W. SOUTH STREET
LONGVIEW, TEXAS 75601

THREE STORY BUILDING HOUSING OFFICES WITH SURFACE PARKING. THE EXTERIOR DESIGN OF THE BUILDING IS A MIXTURE OF BRICK, STONE AND METAL PANEL WITH ALUMINUM FRAMING AND E-COATED GLAZING.

ADOPTED BUILDING CODES*

2012 INTERNATIONAL BUILDING CODE (COMMERCIAL)
2012 INTERNATIONAL MECHANICAL CODE
2017 NATIONAL ELECTRICAL CODE
2012 INTERNATIONAL PLUMBING CODE
2012 INTERNATIONAL FIRE CODE
2015 INTERNATIONAL ENERGY CONSERVATION CODE
2012 INTERNATIONAL FUEL & GAS CODE
2012 TEXAS ACCESSIBILITY STANDARDS

*ALL CODES REQUIREMENTS TO INCLUDE LOCAL AMMENDMENTS

OCCUPANCY AND CONSTRUCTION TYPE

OCCUPANCY TYPE	A-3, B, S-2 & I-3
CONSTRUCTION TYPE	II-B

*REFERENCE CODE PLAN FOR ADDITIONAL INFORMATION

GROSS BUILDING AREA

LEVEL	AREA
LEVEL 1	31,289 SF
LEVEL 2	22,408 SF
LEVEL 3	17,284 SF
PENTHOUSE	322 SF
	71,303 SF

PARKING INFORMATION

PARKING INFORMATION

REFER TO SITE PLAN **SHEET A101** FOR ALL REQUIRED PARKING INFORMATION

ADDITIONAL CODE INFORMATION

OCCUPANCY LEGEND

ASSEMBLY: A-3
OFFICE: B
STORAGE: S-2
INSTITUTIONAL GROUP: I-3

AUTOMATIC SPRINKLER SYSTEM

BUILDING WILL BE FULLY EQUIPPED WITH AN AUTOMATIC FIRE SPRINKLER SYSTEM

FIRE RESISTANCE REQUIREMENTS: II-B

STRUCTURAL FRAME	- 0-HR: PER IBC TABLE 601
BEARING WALLS (EXTERIOR)	- 0-HR: PER IBC TABLE 601
BEARING WALLS (INTERIOR)	- 0-HR: PER IBC TABLE 601
NONBEARING WALLS	- 0-HR: PER IBC TABLE 601
FLOOR CONSTRUCTION	- 0-HR: PER IBC TABLE 601
ROOF CONSTRUCTION	- 0-HR: PER IBC TABLE 601

NOTE:
LOAD BEARING WALLS AT STAFF ELEVATOR AND MECHANICAL YARD ARE 2-HR RATED AS SHOWN (CMU) TO MEET REQUIRMENTS OF UL U901 AND U902. CMU CELLS TO BE FULLY GROUTED, REF. STRUCTURAL.

KNOX BOXES

KNOX LOBBY ELEVATOR BOX TO INCLUDE FIREFIGHTERS CONTROL KEYS AND EMERGENCY DOOR KEY. REF. TO SPECS FOR ADDITIONAL INFORMATION.

OCCUPANT LOAD

LEVEL	OCCUPANCY LOAD
LEVEL 1	222
LEVEL 2	491
LEVEL 3	270
PENTHOUSE	0
	983

NUMBER OF EXITS REQUIRED AND PROVIDED BY FLOOR (PER IBC TABLE 1021.2)

LEVEL	REQUIRED	PROVIDED	STATUS
LEVEL 1	2	14	[OK]
LEVEL 2	2	2	[OK]
LEVEL 3	2	2	[OK]

ALLOWABLE HEIGHT

MAXIMUM HEIGHT: 75' FEET ABOVE GRADE (PER IBC TABLE 503 AND SECTION 504.2)
50 FEET ABOVE GRADE OR MORE (REQ. SUBMITTAL FOR CITY REVIEW)
PROPOSED BUILDING: 60' 4" [OK-REQ. SUBMITTAL]

MAXIMUM NUMBER OF STORIES: 4 (PER IBC TABLE 503 AND SECTION 504.2)
PROPOSED BUILDING: 1 [OK]

PROVIDED NUMBER OF STORIES: 3

ALLOWABLE AREA

AREA MODIFICATION CALCULATION, PER IBC 506: REFERENCE CALCULATIONS PER IBC 2012, TABLE 503
CONSTRUCTION TYPE II-B BASED ON ALLOWABLE AREA INCREASES PER 504.2, 506.2 AND 506.3

BUILDING IS MIXED OCCUPANCY - NON-SEPARATED PER IBC 508.3.3

AREA INCREASE MODIFICATION

'A-3' INCREASE [USE MOST RESTRICTIVE]
$A_a = \{A_p + [A_t * u] + [A_a * u]\}$ [EQUATION 5-1]
$A_a = \{9,500 + [9,500 * 0.75] + [9,500 * 2]\}$ [SPRINKLER INCREASE = 200% PER 506.3]
$A_a = \{9,500 + [7,125] + [19,000]\}$
$A_a = 35,625$ SF ALLOWED PER FLR

506.2 FRONTAGE INCREASE
$I_f = [F/P - 0.25] * W/30$
$I_f = [1 - 0.25] * 30/30$
$I_f = 0.75$

MAXIMUM AREA PER FLOOR PLATE:
[EQUATION 5-2]

506.3 AUTOMATIC SPRINKLER INCREASE
THE BUILDING AREA LIMITATION IN TABLE 503 IS PERMITTED TO INCREASED BY ADDITIONAL 200 PERCENT (I_a= 2) FOR BUILDINGS WITH MORE THAN ONE STORY ABOVE GRADE PLAN, IN ADDITION TO THE HEIGHT AND STORY INCREASES IN SECTION 504.2

504.2 AUTOMATIC SPRINKLER SYSTEM INCREASE
MAX. BUILDING HEIGHT OF 55 FT. IS INCREASED BY 20 FT AND THE MAX NUMBER OF STORIES IS INCREASED BY ONE.

ALLOWABLE AREA _NON-SEPARATED OCCUPANCY

LEVEL 1 - ACTUAL SF/ALLOWED MAX
LEVEL 1 = 31,289 / 35,625 = 0.88
TOTAL = 0.88 < 1.0 [OK]

LEVEL 2 - ACTUAL SF/ALLOWED MAX
LEVEL 2 = 22,301 / 35,625 = 0.63
TOTAL = 0.63 < 1.0 [OK]

LEVEL 3 - ACTUAL SF/ALLOWED MAX
LEVEL 3 = 17,284 / 35,625 = .49
TOTAL = 0.49 < 1.0 [OK]

CODE PLAN LEGEND

THIS DRAWING IS BEST VIEWED/PRINTED IN COLOR. IF PRINTED IN BLACK AND WHITE, IT SHOULD BE PRINTED SO THAT THE GRADIENT COLORS SHOW (PHOTO OR GRADIENT PRINTING)

WALL TYPES
- NON-RATED WALL
- 1-HOUR RATED WALL
- 2-HOUR RATED WALL

ROOM TAG
CORRIDOR 1/100 11
- ROOM NAME
- NUMBER OF OCCUPANTS
- OCCUPANT/SF RATIO

CODE SYMBOLS
- EXIT — EXIT NOTATION
- DIAGONAL DIMENSION
- DISTANCE BETWEEN EXITS
- EXIT TRAVEL DISTANCE
- DEAD END CORRIDOR
- FDC — FIRE DEPARTMENT CONNECTION
- FE — FIRE EXTINGUISHER
- FEC — FIRE EXTINGUISHER CABINET - RECESSED
- KNOX — KNOX BOX

TYPICAL OCCUPANCY & EGRESS TAG
- EGRESS TYPE
- NUMBER OF OCCUPANTS
- REQUIRED WIDTH OF EGRESS
- EGRESS WIDTH FACTOR
- DIRECTION OF EGRESS (SOLID FOR TYP. EGRESS, OUTLINE FOR STAIR)

OVER-RIDE OCCUPANCY & EGRESS TAG
- EGRESS TYPE
- NUMBER OF OCCUPANTS
- INDICATES OCCUPANTS FROM ABOVE (W.O.)
- REQUIRED WIDTH OF EGRESS
- EGRESS WIDTH FACTOR
- DIRECTION OF EGRESS
- INDICATES OCCUPANTS FROM BELOW (W.O.)
- INDICATES OCCUPANTS COMBINED FROM ABOVE AND BELOW (W.O.)

EGRESS TYPE LEGEND
AS - ASSEMBLY AISLE W/ SMOKE PROTECTION
AX - ASSEMBLY AISLE W/O SMOKE PROTECTION
CS - TYPICAL COMPONENT W/ SPRINKLER
CX - TYPICAL COMPONENT W/O SPRINKLER
SS - STAIR W/ SPRINKLER
SX - STAIR W/O SPRINKLER

LONGVIEW POLICE DEPARTMENT

518 W. SOUTH ST. LONGVIEW, TEXAS 75601

Architect: Brinkley Sargent Wigginton Architects (972) 960-9970
Landscape: Kendall Landscape Architecture (214) 739-3226
Structural: L.A. Fuess Partners, Inc (214) 593-1118
MEP: M-E Engineers (214) 741-1589
Civil: KSA Engineers, Inc (903) 236-7700
Technology: M+E Engineers (303) 421-6656

BRINKLEY SARGENT WIGINTON ARCHITECTS

HISTORY

#	DATE	DESCRIPTION

LICENSED ARNOLD SARGENT BRINKLEY 9941 STATE OF TEXAS
06/19/2020

CODE PLAN

21719
08/19/2020

A021

BID ISSUE

6/19/2020 11:19:22 AM

G:\Revit Locals\LPD_CENTRAL_x19_bsommer_OR_18-2020.rvt

© 2020 Brinkley Sargent Wigginton Architects, Inc.

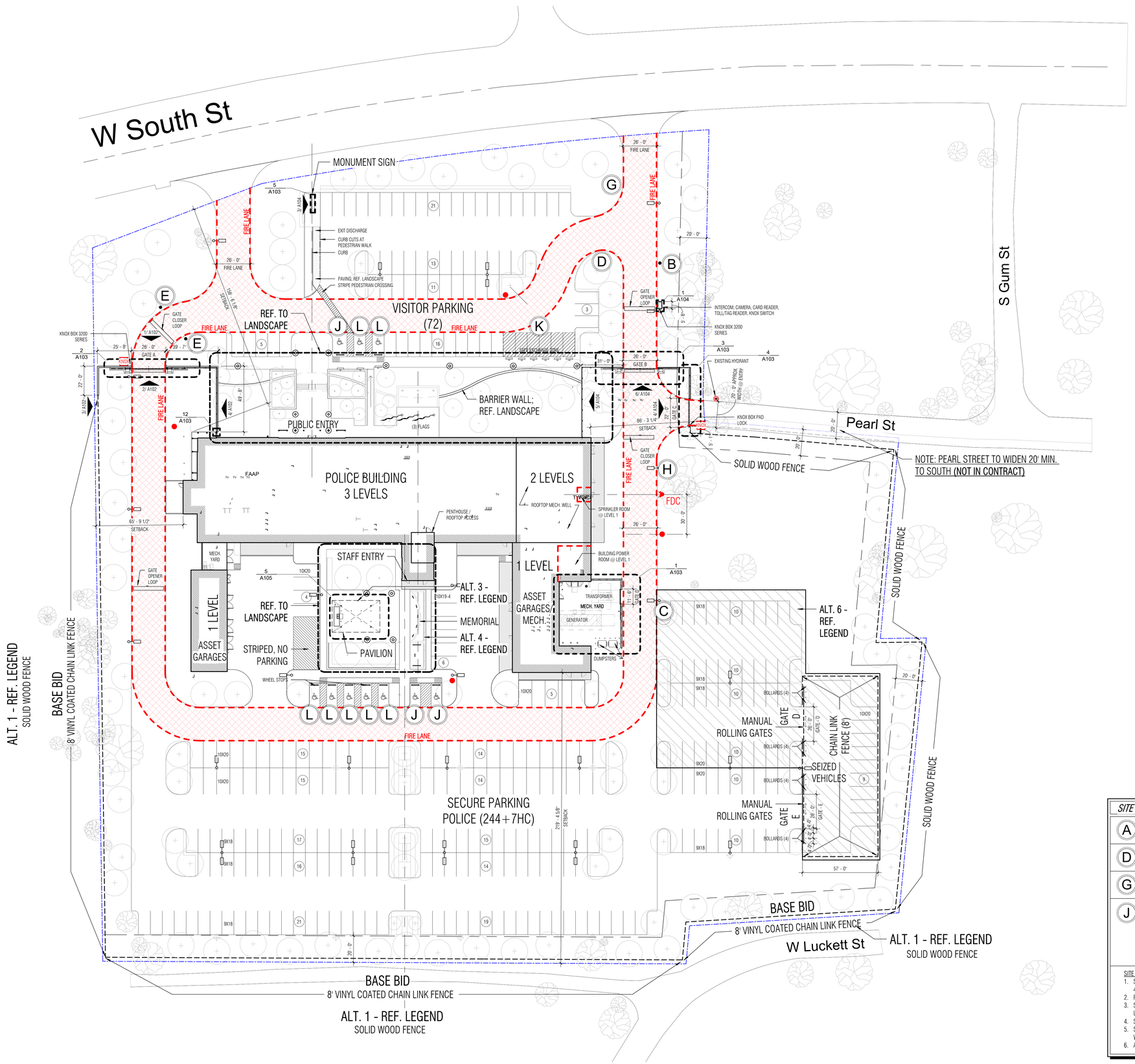

1 SITE PLAN
SCALE: 1" = 30'-0"

SITE GENERAL NOTES

REF. LANDSCAPE DRAWINGS FOR:
- TREE PROTECTION
- PLANTING & IRRIGATION
- FURTHER INFORMATION INCLUDING GRADING & DRAINAGE AT NOTED AREAS
- FRONT AND REAR PLAZAS/FLATWORK
- FLATWORK FINISHES
- PAVEMENT SLEEVES

REF. CIVIL DRAWINGS FOR:
- EROSION CONTROL
- HORIZONTAL CONTROL
- PAVING SECTIONS & SUBGRADE PREPARATION
- GRADING & DRAINAGE
- UTILITIES & OFF-SITE SCOPE OF WORK

REF. STRUCTURAL DRAWINGS FOR:
- SUBGRADE PREPARATION FOR ALL ON-GRADE STRUCTURES WITHIN BUILDING
- FOUNDATIONS FOR ALL STRUCTURES

REF. PLUMBING DRAWINGS FOR:
- ROOF DRAIN TIE-INS

REF. ELECTRICAL DRAWINGS FOR:
- SITE LIGHTING

PARKING INFORMATION

BUILDING INFORMATION

GROSS BUILDING AREA:.....71,196 SF

MAIN BUILDING HEIGHT:.....47'-4"(TYP.), 51'-4"(W. STAIR), 63'-4"(S. ELEVATOR/PENTHOUSE)
EAST GARAGE HEIGHT:.....13'-4"
WEST GARAGE HEIGHT:.....17'-4"

PARKING INFORMATION

BUILDING USE NOT LISTED IN ORDINANCE. (CALCULATED @1/300 SF WOULD EQUAL 238 SPACES)
PARKING DESIGN BASED ON NEEDS ASSESSMENT AS STATED BELOW:

REQUIRED		ACTUAL		
PUBLIC SPACES:	72	PUBLIC SPACES:	**72**	(69+3HC)
STAFF SPACES:	236	STAFF SPACES:	**251**	(244+7HC)
TOTAL SPACES:	308	TOTAL SPACES:	**323**	

ACCESSIBLE PARKING REQUIRED = 3 MIN. VISITORS LOT PER TAS TABLE 208.2 (51-75) AND 7 MIN. STAFF LOT(201-300)
ACCESSIBLE PARKING PROVIDED = 10 TOTAL **(7 IN STAFF LOT, 3 IN PUBLIC LOT)**

REQUIRED: STAFF PARKING (236)
STALL SIZE TARGETS:
(10)X20 SPACES: **TARGET** 74 / **ACTUAL** 73+9 SEIZED AUTO).....***(-9 STALLS IF ALT. #6 IS TAKEN)***
(8)X18 SPACES: **TARGET** 162 / **ACTUAL** 162).....***(-40 STALLS IF ALT. #6 IS TAKEN)***
236 **244**

SITE SYMBOLS

	FIRE LANE (26'W)		ACCESSIBLE SPACE
	FIRE HYDRANT		PEDESTRIAN LIGHT POLE/BOLLARD
	FLAG POLE		LOT LIGHT POLE
FDC	FIRE DEPARTMENT CONNECTION		LOT LIGHT POLE - DOUBLE
KNOX	SITE ACCESS KNOX BOX LOCATIONS		PROPERTY LINE

LONGEST DIAGONAL OF SITE = 789'
789' / 2 = **394.5'**

VEHICULAR EXITS SPACED 1/2 DIAGONAL MIN.
393' < 394.5' *(18' SHORT OF 394.5)*

ALTERNATES

ALT. 1 - IN LIEU OF THE INDICATED VINYL COATED CHAIN LINK FENCE AS IS CURRENTLY INDICATED ON THE SOUTH AND WEST PROPERTY LINES; SUBSTITUTE A WOOD FENCE TO MATCH THE WOOD FENCE ON THE EAST PROPERTY LINE.

ALT. 2 - REFER TO LANDSCAPE DRAWINGS FOR AREA WHERE SOD IS TO BE PROVIDED IN LIEU OF HYDROMULCH.

ALT. 3 - DELETE THE CANOPY LOCATED IN THE STAFF PAVILION/ OUTDOOR BREAK AREA, SOUTH OF THE MAIN BUILDING. DELETE OUTDOOR KITCHEN COUNTER, CMU, SINK, CABINET, AND ASSOCIATED PLUMBING. POWER TO BE STUBBED OUT AT DELETED COUNTER. PROVIDE CONDUIT FOR POWER (UP TO 5 FT. OF CANOPY LOCATION) AS INDICATED IN BASE BID. REDUCED LANDSCAPE PER ALTERNATE DRAWINGS; DELETE FENCING AT WEST & SOUTH OF PAVILION. PROVIDE STRUCTURAL CANOPY FOOTINGS FOR POSSIBLE FUTURE ADD.

ALT. 4 - DELETE ALL WORK INDICATED IN THE 'OFFICER MEMORIAL' AREA - INCLUDING MTL. SCREEN FENCE, PAVING AND LIGHTING INDICATED IN BASE BID. PROVIDE LIMITED LANDSCAPE/ IRRIGATION PER ALTERNATE DRAWINGS. PROVIDE STRUCTURAL FOOTINGS FOR POSSIBLE FUTURE ADD.

ALT. 5 - REFER TO ALTERNATE SPECIFICATION REGARDING GENERATOR MODIFICATION

ALT. 6 - DELETE PARKING, FENCES, AND GATES WITHIN HATCHED AREA (SOUTH/EAST CORNER)

SITE SIGNAGE

A	PUBLIC ENTRY	B	STAFF ONLY	C	NO EXIT
D	APPROVED ACCESS ONLY / PUBLIC ENTRY	E	EXIT ONLY	F	DELIVERIES
G	PUBLIC PARKING	H	FDC		
J	RESERVED PARKING / VAN ACCESSIBLE	K	SAFE EXCHANGE ZONE	L	RESERVED PARKING

SITE SIGNAGE NOTES:
1. SIGN A, B, C, D: 2 POST MOUNTED, SINGLE SIDED 36"X36" PANEL WITH 4" LETTERS WITH DIRECTIONAL ARROWS
2. PROVIDE POWER FOR LIGHTING; MONUMENT SIGN REF. ELEC.
3. SIGN J, L: ALL ACCESSIBLE SPACES TO HAVE ACCESSIBLE SPACE SIGN UNLESS NOTED OTHERWISE; INSTALLED PER TAS REQ.
4. SIGN J, K, L - REFER TO SIGNAGE PACKAGE FOR ADDITIONAL GRAPHICS
5. SIGN J, K, L: 2" SQ. GALV. STEEL TUBE SET 2' INTO 12" DIAMETER PIER, WITH BREAKAWAY SUPPORT BASE
6. ALL SIGNAGE TO REQUIRE SEPERATE PERMIT.

Architect: Brinkley Sargent Wigginton Architects (972) 960-9970
Landscape: Kendall Landscape Architecture (214) 739-3226
Structural: L.A. Fuess Partners, Inc (214) 593-1118
MEP: M-E Engineers (214) 741-1589
Civil: KSA Engineers, Inc (903) 236-7700
Technology: M+E Engineers (303) 421-6656

BRINKLEY SARGENT WIGINTON ARCHITECTS

LONGVIEW POLICE DEPARTMENT

518 W. SOUTH ST. LONGVIEW, TEXAS 75601

HISTORY

#	DATE	DESCRIPTION

REGISTERED ARNOLD SARGENT ARCHITECT 9941 STATE OF TEXAS
08/19/2020

SITE PLAN

BID ISSUE

21719
08/19/2020
A101

6/21/2020 5:02:37 PM

G:\Revit Locals\LVPD_SITE CENTRAL_A19_jlovegomez_08-21-2020.rvt

© 2020 Brinkley Sargent Wigginton Architects, Inc.

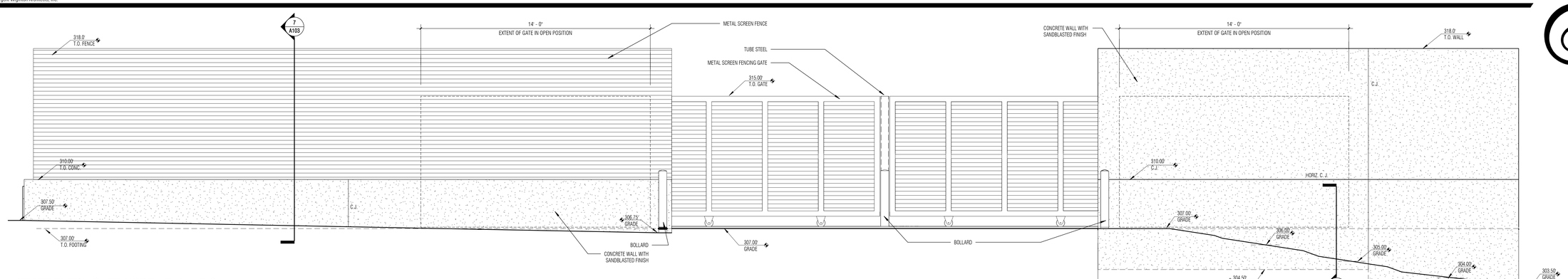

1 STAFF ENTRY GATE NORTH ELEVATION

SCALE: 3/8" = 1'-0"

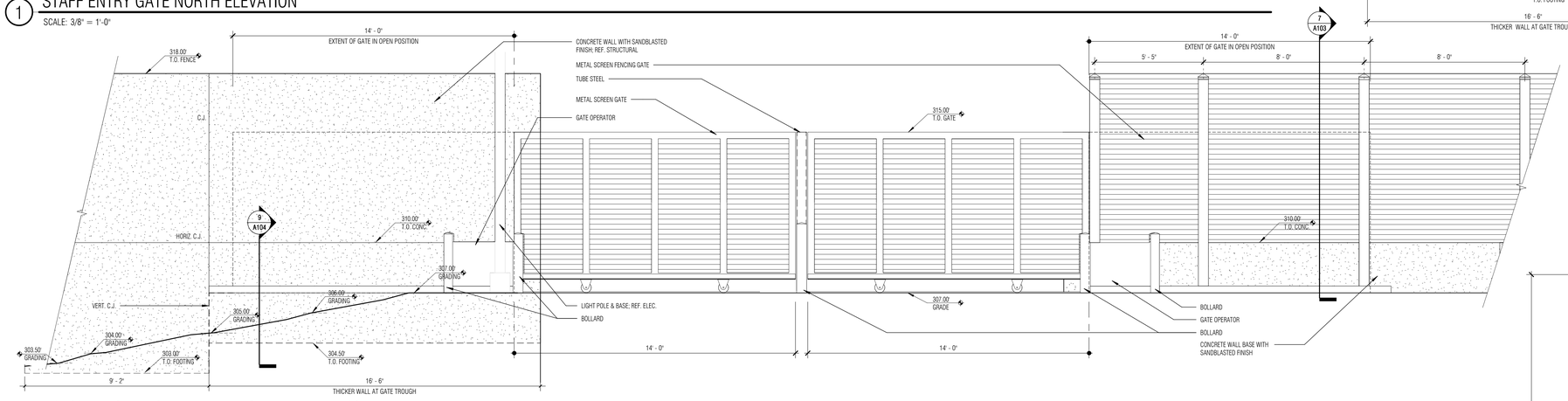

2 INSIDE NORTH STAFF ENTRY GATE A ELEVATION

SCALE: 3/8" = 1'-0"

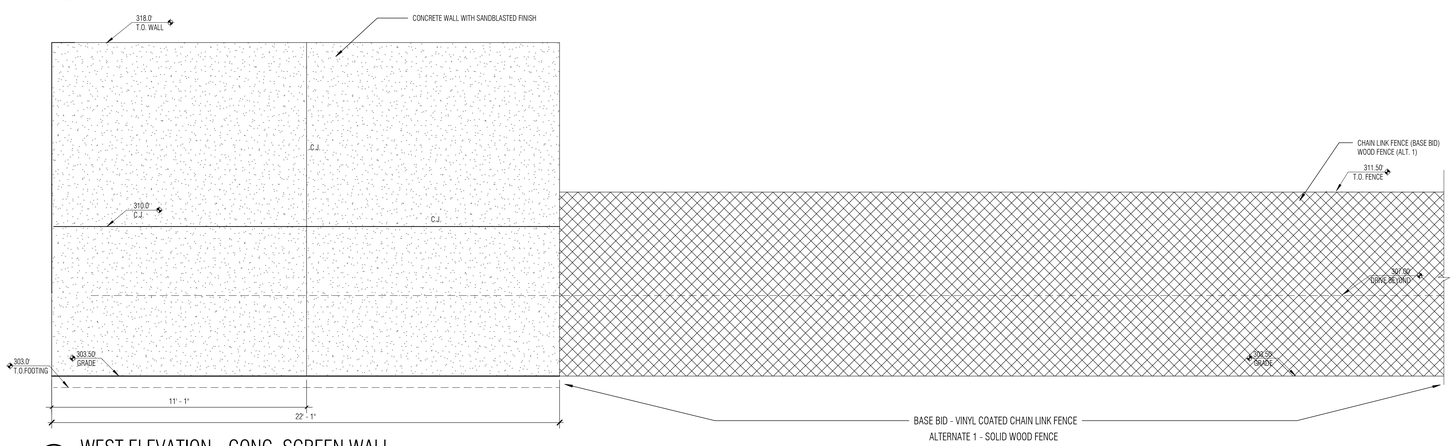

3 WEST ELEVATION - CONC. SCREEN WALL

SCALE: 3/8" = 1'-0"

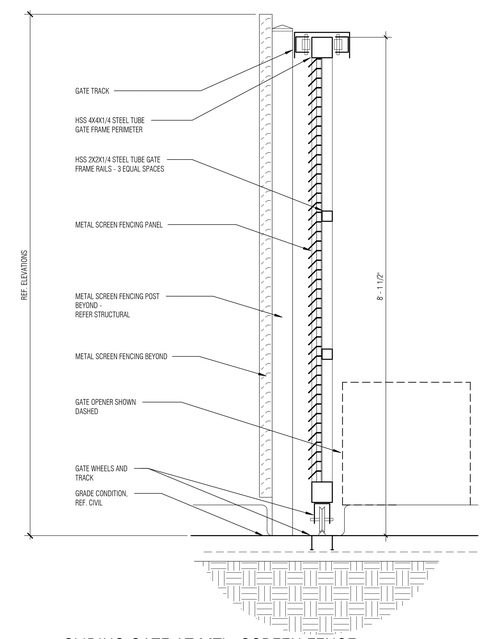

7 SLIDING GATE AT MTL. SCREEN FENCE

SCALE: 1" = 1'-0"

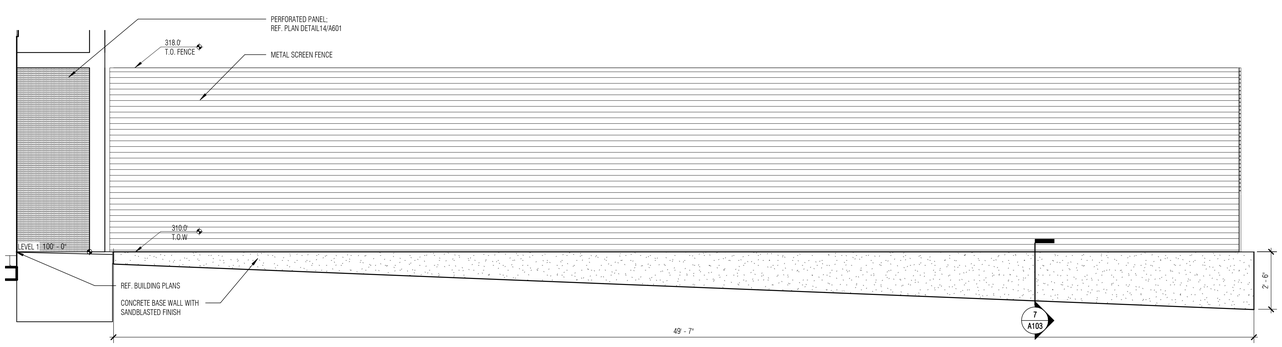

4 EAST ELEVATION - SCREEN FENCE

SCALE: 3/8" = 1'-0"

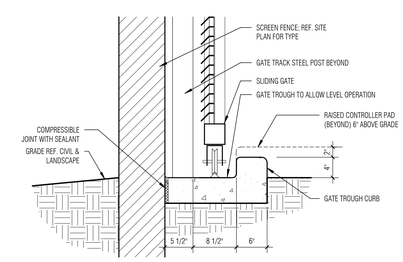

5 GATE TROUGH AT CONC. WALL

SCALE: 1" = 1'-0"

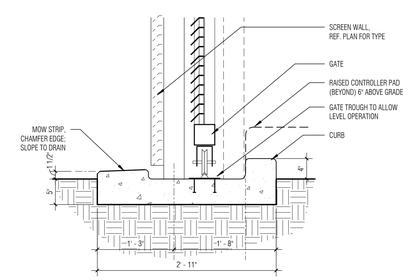

6 GATE THROUGH AT METAL SCREEN FENCE

SCALE: 1" = 1'-0"

Architect: Brinkley Sargent Wigginton Architects (972) 960-9970
Landscape: Kendall Landscape Architecture (214) 739-3226
Structural: L.A. Fuess Partners, Inc (214) 593-1118
MEP: M-E Engineers (214) 741-1589
Civil: KSA Engineers, Inc (903) 236-7700
Technology: M-E Engineers (303) 421-6656

BRINKLEY SARGENT WIGINTON ARCHITECTS

LONGVIEW POLICE DEPARTMENT

518 W. SOUTH ST. LONGVIEW, TEXAS 75601

HISTORY		
#	DATE	DESCRIPTION

SITE DETAILS AND FENCE ELEVATIONS

21719

08/19/2020

A102

BID ISSUE

8/18/2020 10:51:09 AM

D:\Revit Local\LPD_SITE CENTRAL_A19_boschmar_08-18-2020.rvt

© 2020 Brinkley Sargent Wigginton Architects, Inc.

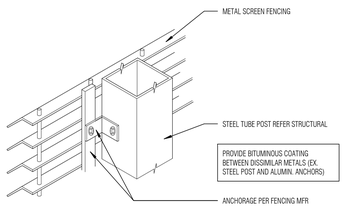

8 MTL. SCREEN FENCE ANCHORS AXON
SCALE: 1 1/2" = 1'-0"

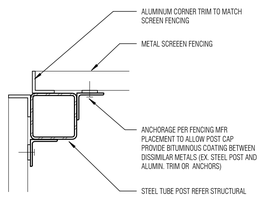

9 MTL. SCREEN FENCING OUTSIDE POST
SCALE: 1 1/2" = 1'-0"

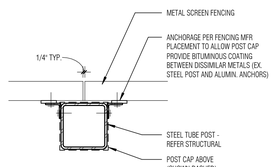

10 MTL. SCREEN GATE ANCHOR
SCALE: 1 1/2" = 1'-0"

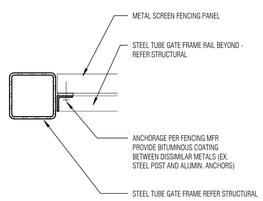

11 MTL. SCREEN GATE FRAME ANCHOR
SCALE: 1 1/2" = 1'-0"

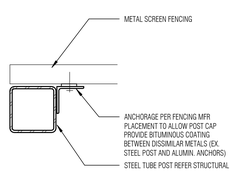

12 METAL SCREEN END POST
SCALE: 1 1/2" = 1'-0"

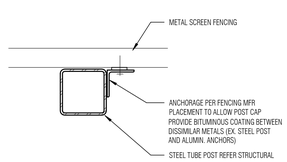

13 METAL SCREEN FENCING TYP.
SCALE: 1 1/2" = 1'-0"

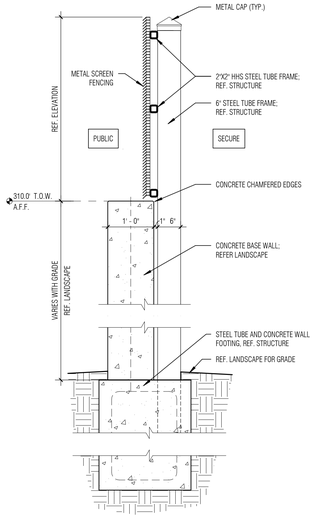

7 SD CONCRETE & LOUVERED FENCE
SCALE: 3/4" = 1'-0"

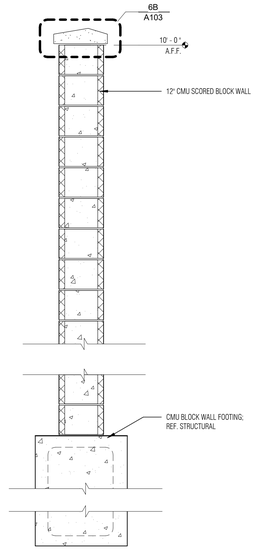

6 WS MECH YARD CMU WALL SECTION
SCALE: 3/4" = 1'-0"

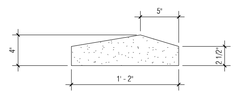

6B CAST STONE CAP
SCALE: 1 1/2" = 1'-0"

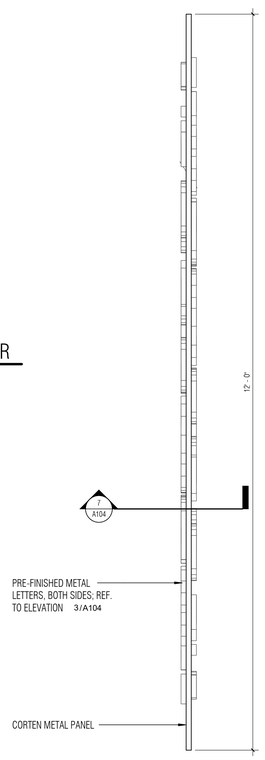

REF. LANDSCAPE PLAN FOR PAVING AT MONUMENT SIGN
REF. ELEC. FOR GRADE LEVEL LIGHTING

5 MONUMENT SIGN PLAN
SCALE: 1" = 1'-0"

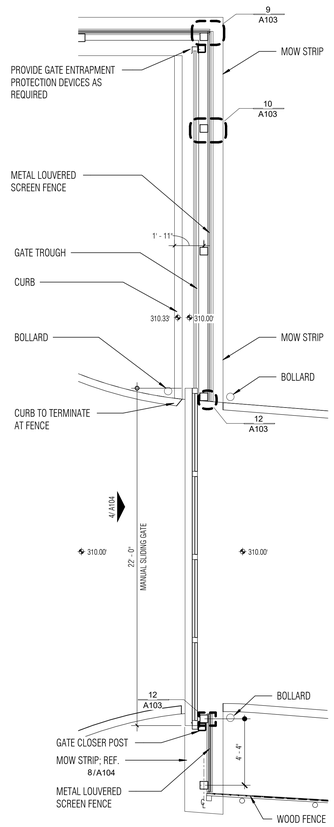

4 SLIDING GATE 'C' PLAN
SCALE: 1/4" = 1'-0"

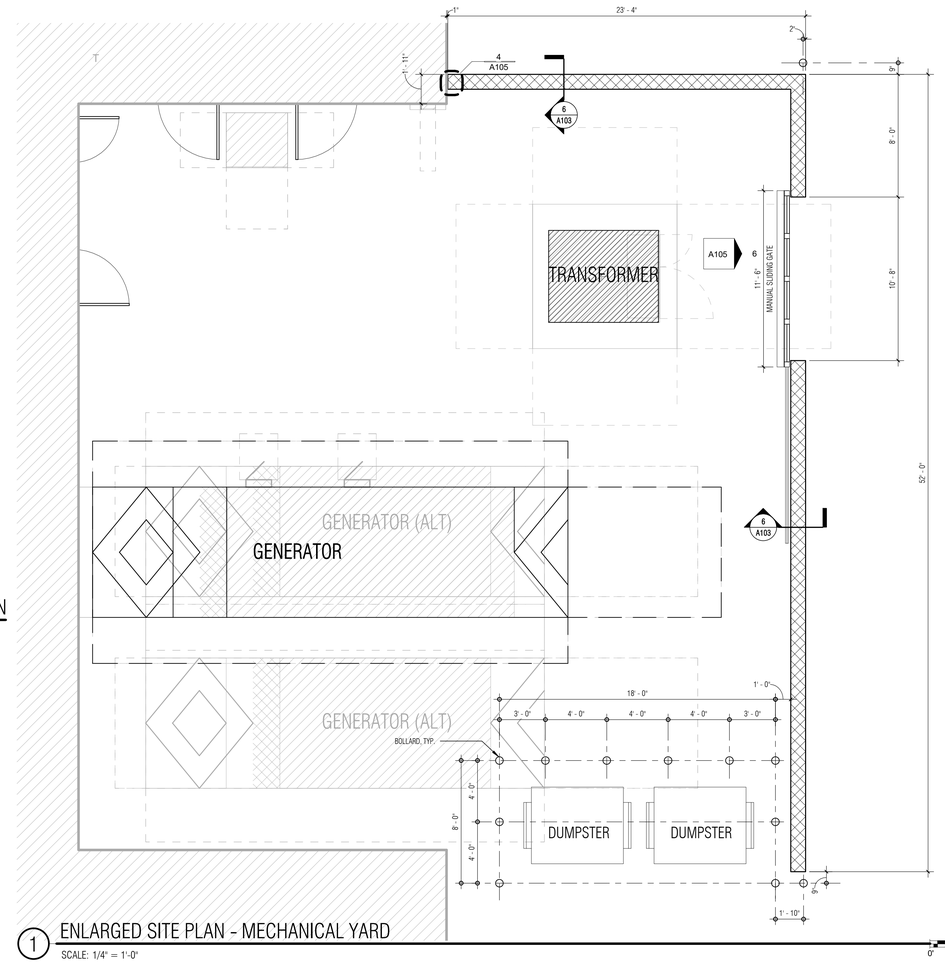

1 ENLARGED SITE PLAN - MECHANICAL YARD
SCALE: 1/4" = 1'-0"

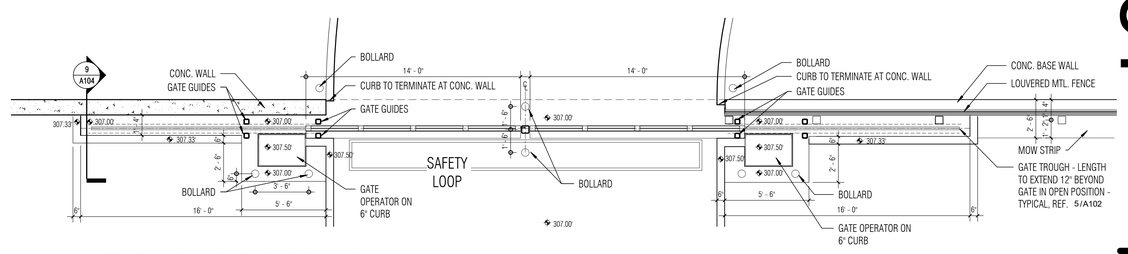

2 WEST STAFF ENTRY SLIDING GATE A
SCALE: 1/4" = 1'-0"

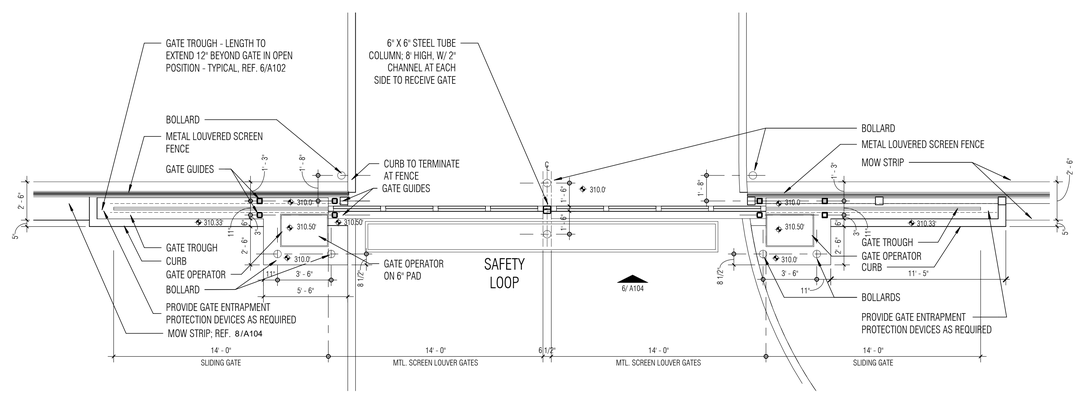

3 SLIDING GATE 'B' PLAN
SCALE: 1/4" = 1'-0"

Architect: Brinkley Sargent Wigginton Architects (972) 960-9970
Landscape: Kendall Landscape Architecture (214) 739-3226
Structural: L.A. Fuess Partners, Inc (214) 593-1118
MEP: M-E Engineers (214) 741-1589
Civil: KSA Engineers, Inc (903) 236-7700
Technology: M-E Engineers (303) 421-6656

BRINKLEY SARGENT WIGINTON ARCHITECTS

LONGVIEW POLICE DEPARTMENT

518 W. SOUTH ST. LONGVIEW, TEXAS 75601

HISTORY		
#	DATE	DESCRIPTION

REGISTERED ARCHITECT 3941 STATE OF TEXAS
08/19/2020

SITE DETAILS AND ENLARGED PLANS

21719
08/19/2020

A103

BID ISSUE

8/21/2020 8:46:55 PM

D:\Revit Locals\LPD_SITE CENTRAL_A19_mreagoner_08-21-2020.rvt

© 2020 Brinkley Sargent Wigginton Architects, Inc.

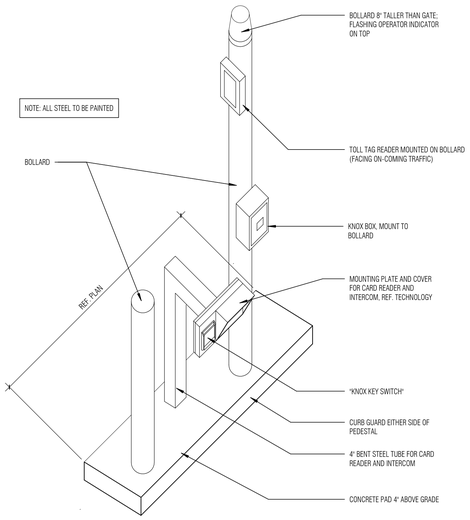

1 GATE CONTROLLER
SCALE: 3/4" = 1'-0"

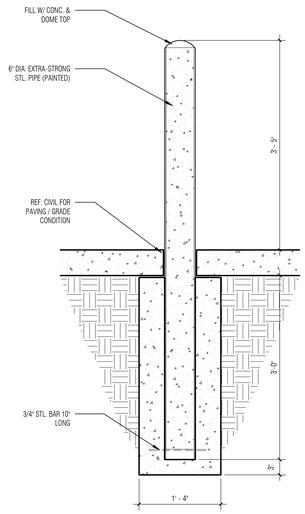

2 TYP. BOLLARD DETAIL
SCALE: 1" = 1'-0"

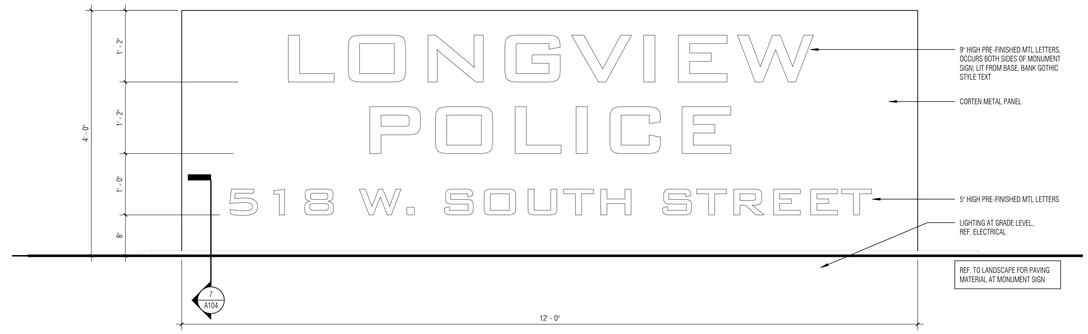

3 MONUMENT SIGN ELEVATION
SCALE: 1" = 1'-0"

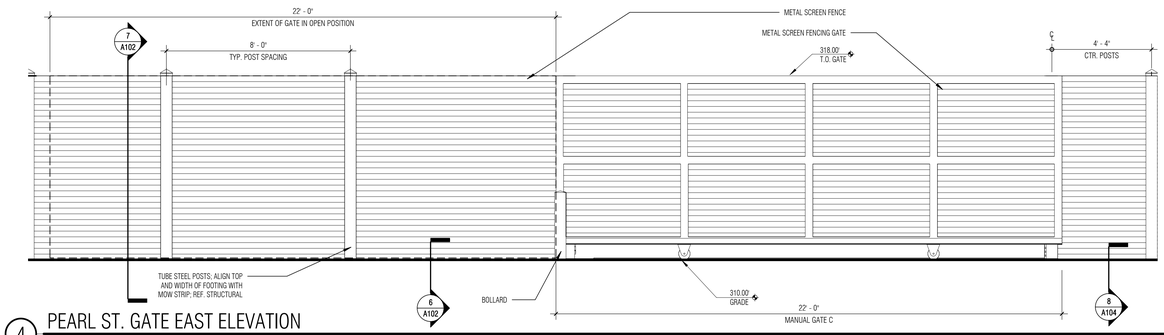

4 PEARL ST. GATE EAST ELEVATION
SCALE: 3/8" = 1'-0"

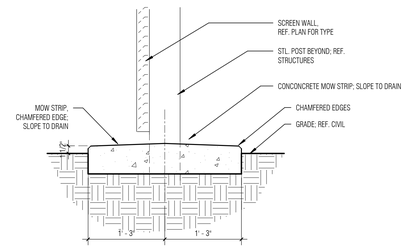

8 MOW STRIP
SCALE: 1" = 1'-0"

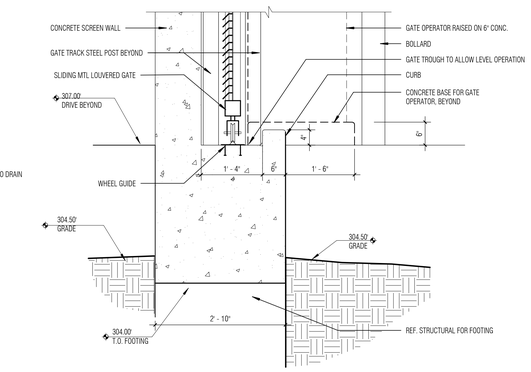

9 CONCRETE SCREEN WALL AT TROUGH
SCALE: 3/4" = 1'-0"

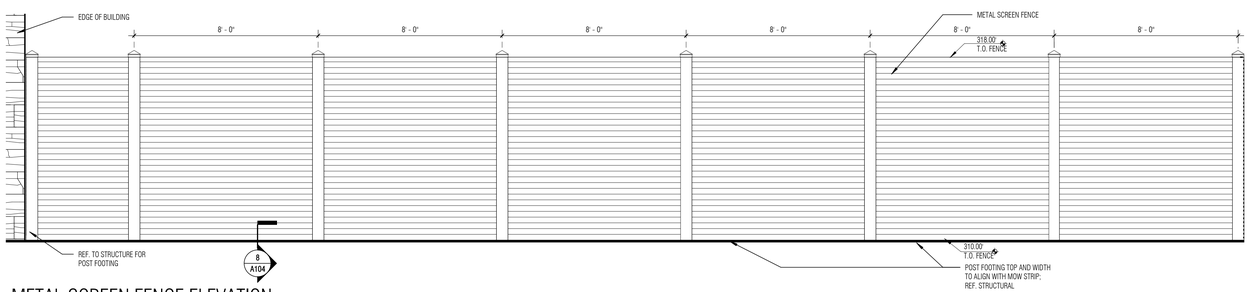

5 METAL SCREEN FENCE ELEVATION
SCALE: 3/8" = 1'-0"

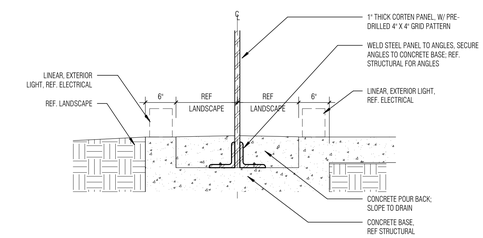

7 CORTEN STEEL PANEL MONUMENT SIGN BASE
SCALE: 1" = 1'-0"

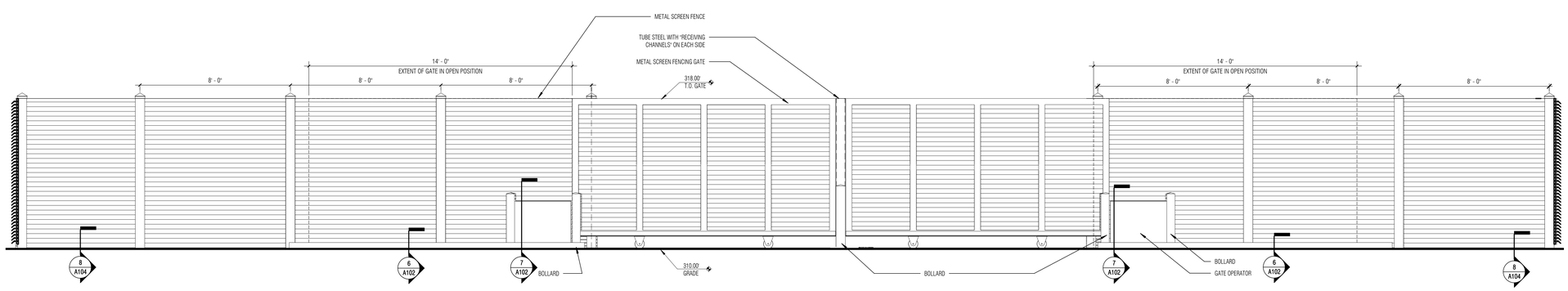

6 METAL SCREEN SLIDING GATE- N / E ELEV.
SCALE: 3/8" = 1'-0"

BRINKLEY SARGENT WIGINTON ARCHITECTS

Architect: Brinkley Sargent Wigginton Architects (972) 960-9970
Landscape: Kendall Landscape Architecture (214) 739-3226
Structural: L.A. Fuess Partners, Inc (214) 593-1118
MEP: M-E Engineers (214) 741-1589
Civil: KSA Engineers, Inc (903) 236-7700
Technology: M-E Engineers (303) 421-6656

LONGVIEW POLICE DEPARTMENT

518 W. SOUTH ST. LONGVIEW, TEXAS 75601

HISTORY		
#	DATE	DESCRIPTION

SITE DETAILS

21719
08/19/2020
A104

BID ISSUE

8/21/2020 6:42:59 PM

J:\Revit Local\Ph_SITE CENTRAL_A19_Honeycomz_08-21-2020.rvt

© 2020 Brinkley Sargent Wigginton Architects, Inc.

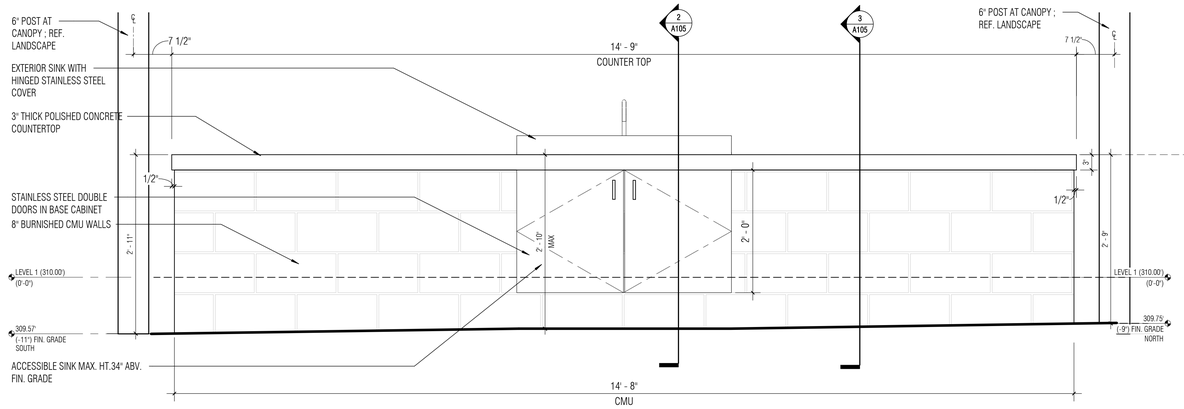

1 ELEVATION OUTDOOR KITCHEN COUNTER ALTERNATE 3

SCALE: 1" = 1'-0"

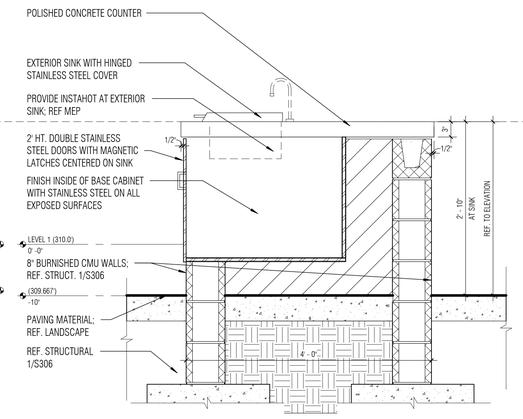

2 MLWK COUNTER AT OUTDOOR SINK ALTERNATE 3

SCALE: 1" = 1'-0"

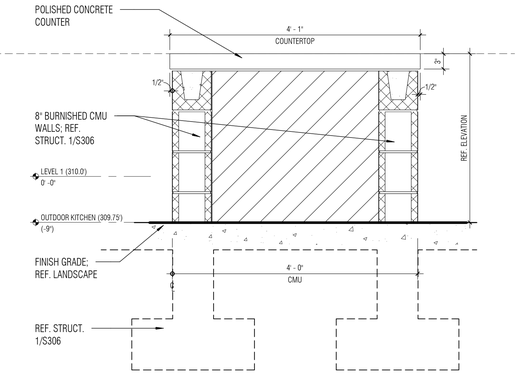

3 MLWK OUTDOOR KITCHEN COUNTER ALT.3

SCALE: 1" = 1'-0"

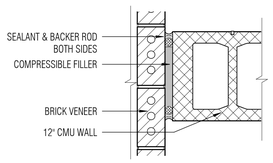

4 PD_CONTROL JOINT @ MASONRY INTERSECTION

SCALE: 1 1/2" = 1'-0"

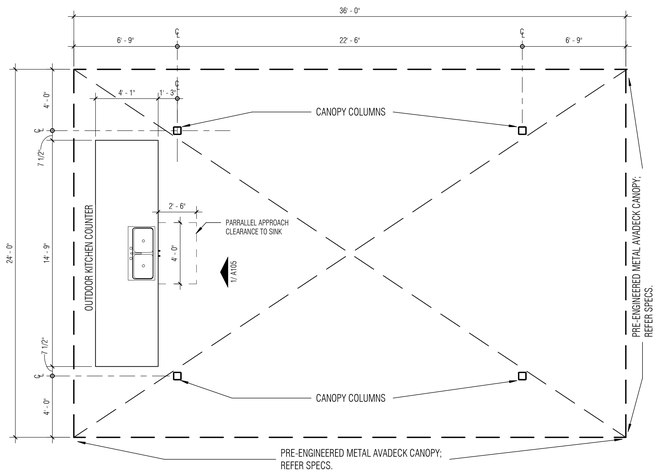

5 PAVILION CANOPY PLAN_ALTERNATE 3

SCALE: 1/4" = 1'-0"

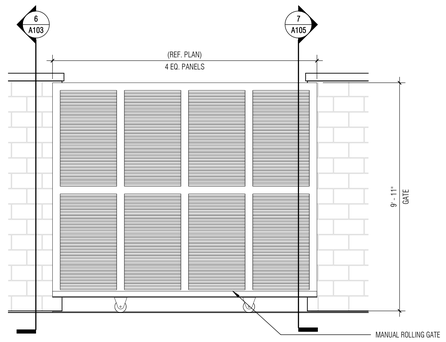

6 GATE ELEVATION @ TRANSFORMER YARD

SCALE: 3/8" = 1'-0"

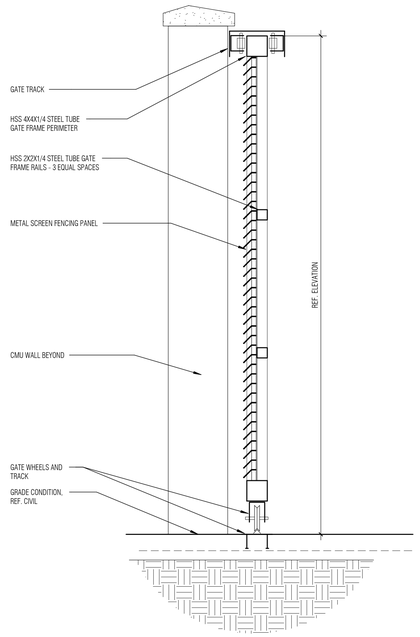

7 SECTION_MANUAL ROLLING GATE AT TRANSFORMER

SCALE: 1" = 1'-0"

BRINKLEY SARGENT WIGGINTON ARCHITECTS

Architect: Brinkley Sargent Wigginton Architects (972) 960-9970
Landscape: Kendall Landscape Architecture (214) 739-3226
Structural: L.A. Fuess Partners, Inc (214) 593-1118
MEP: M-E Engineers (214) 741-1589
Civil: KSA Engineers, Inc (903) 236-7700
Technology: M-E Engineers (303) 421-6636

LONGVIEW POLICE DEPARTMENT

518 W. SOUTH ST. LONGVIEW, TEXAS 75601

HISTORY		
#	DATE	DESCRIPTION

REGISTERED ARCHITECT STATE OF TEXAS 9941 08/19/2020

SITE DETAILS

BID ISSUE

21719
08/19/2020

A105

8/19/2020 10:53:03 AM

D:\Revit Local\LPD_SITE CENTRAL_A19_jacobsen_20-19-2020.rvt

© 2020 Brinkley Sargent Wigginton Architects, Inc.

SLAB EDGE LEGEND

(+4") ABOVE FINISH FLOOR	(+0") FINISH FLOOR LEVEL	(-1/2") BELOW FINISH FLOOR	(-2") BELOW FINISH FLOOR	(-8") BELOW FINISH FLOOR	(-16") BELOW FINISH FLOOR	(-24") BELOW FINISH FLOOR	(-32") BELOW FINISH FLOOR	(-36") BELOW FINISH FLOOR	(-48") BELOW FINISH FLOOR

-1/4" FROM ASSOCIATED LEVEL
RECESS AND SLOPE AWAY FROM BLDG.

-3/4" FROM ASSOCIATED LEVEL
RECESS AND SLOPE AWAY FROM BLDG.

SHEET NOTES:
1. THIS DRAWING IS BEST VIEWED/PRINTED IN COLOR. IF PRINTED IN BLACK AND WHITE, IT SHOULD BE PRINTED SO THAT THE GRADIENT COLORS SHOW (PHOTO OR GRADIENT PRINTING)
2. SLAB EDGE PROVIDED FOR HORIZONTAL CONTROL OF POURED SLABS RELATED TO EDGES, OPENINGS, RECESSES, MAJOR PIPE PENETRATIONS, FLOOR BOXES AND BRICK LEDGES. COORDINATE WITH STRUCTURAL DRAWINGS. ALERT ARCHITECT TO DISCREPANCIES BETWEEN ARCHITECTURAL AND STRUCTURAL DRAWINGS
3. NOT ALL FLOOR DRAINS ARE SHOWN. REFERENCE PLUMBING DRAWINGS FOR MORE INFORMATION
4. ELECTRICAL FLOOR BOXES SHOWN FOR LOCATION PURPOSES. REFERENCE ELECTRICAL DRAWINGS FOR BOX TYPE AND SIZE. FLOOR BOXES TO BE COORDINATED WITH FINAL FURNITURE PACKAGE/LAYOUT. CONTRACTOR TO COORDINATE WITH ARCHITECT ON FINAL PLACEMENT.

ELECTRICAL FLOOR BOX

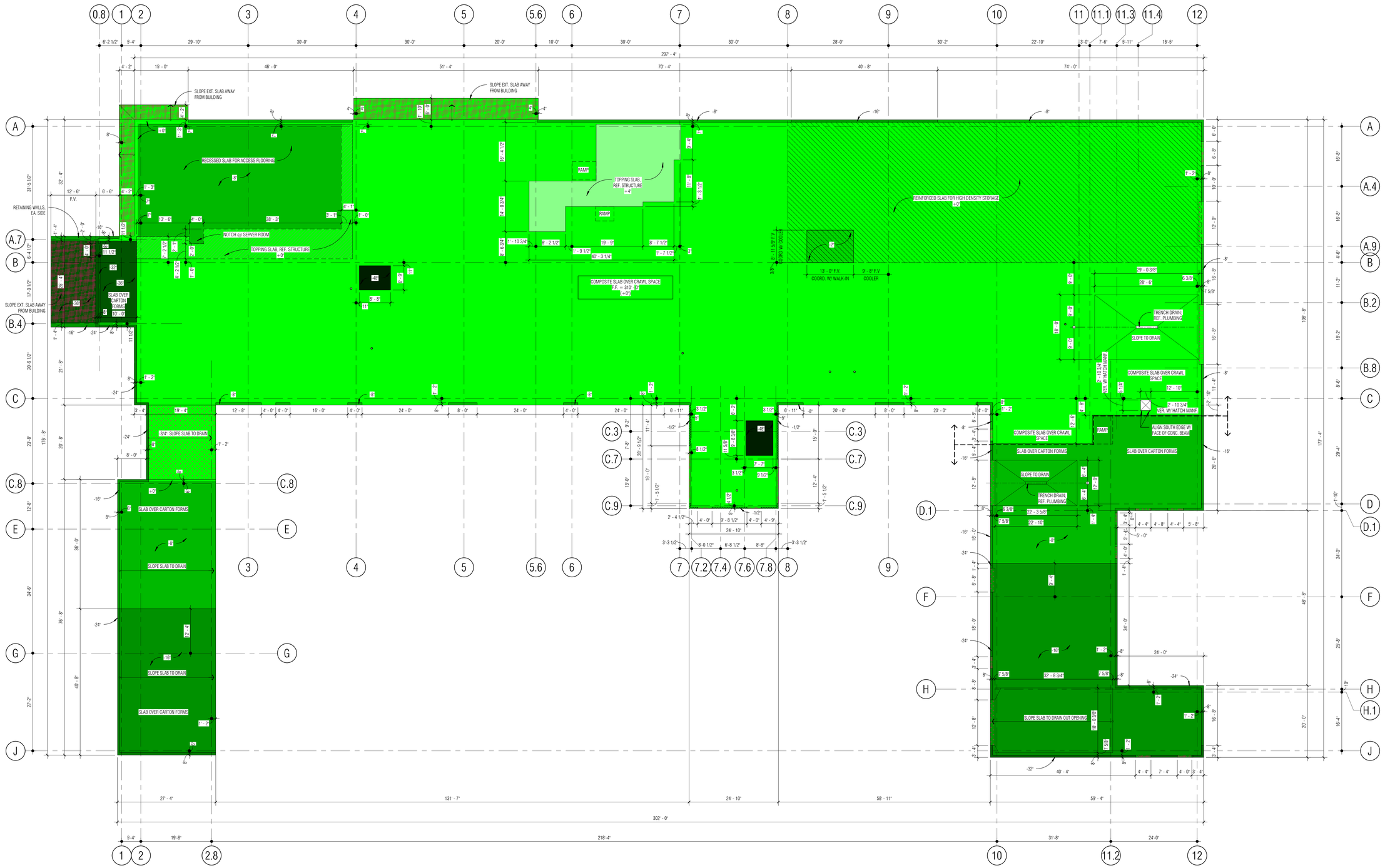

1 LEVEL 1 - SLAB EDGE PLAN
SCALE: 3/32" = 1'-0"

NORTH

Architect: Brinkley Sargent Wigginton Architects (972) 960-9970
Landscape: Kendall Landscape Architecture (214) 739-3226
Structural: L.A. Fuess Partners, Inc (214) 593-1118
MEP: M-E Engineers (214) 741-1589
Civil: KSA Engineers, Inc (903) 236-7700
Technology: M-E Engineers (303) 421-6656

BRINKLEY SARGENT WIGINTON ARCHITECTS

LONGVIEW POLICE DEPARTMENT

518 W. SOUTH ST. LONGVIEW, TEXAS 75601

HISTORY		
#	DATE	DESCRIPTION

REGISTERED ARCHITECT 994 STATE OF TEXAS
08/19/2020

LEVEL 1 - SLAB EDGE PLAN

21719
08/19/2020

A201

BID ISSUE

8/19/2020 11:21:21 AM

E:\Revit Locals\LPD_CENTRAL_A19_Jacobsen_08-19-2020.rvt

© 2020 Brinkley Sargent Wigginton Architects, Inc.

SLAB EDGE LEGEND

(+ 4") ABOVE FINISH FLOOR	(+ 0") FINISH FLOOR LEVEL	(-1/2") BELOW FINISH FLOOR	(- 2") BELOW FINISH FLOOR	(- 8") BELOW FINISH FLOOR	(- 16") BELOW FINISH FLOOR	(- 24") BELOW FINISH FLOOR	(- 32") BELOW FINISH FLOOR	(- 36") BELOW FINISH FLOOR	(- 48") BELOW FINISH FLOOR

-1/4" FROM ASSOCIATED LEVEL RECESS AND SLOPE AWAY FROM BLDG.

-3/4" FROM ASSOCIATED LEVEL RECESS AND SLOPE AWAY FROM BLDG.

SHEET NOTES:

1. THIS DRAWING IS BEST VIEWED/PRINTED IN COLOR. IF PRINTED IN BLACK AND WHITE, IT SHOULD BE PRINTED SO THAT THE GRADIENT COLORS SHOW (PHOTO OR GRADIENT PRINTING)
2. SLAB EDGE PROVIDED FOR HORIZONTAL CONTROL OF POURED SLABS RELATED TO EDGES, OPENINGS, RECESSES, MAJOR PIPE PENETRATIONS, FLOOR BOXES AND BRICK LEDGES. COORDINATE WITH STRUCTURAL DRAWINGS. ALERT ARCHITECT TO DISCREPANCIES BETWEEN ARCHITECTURAL AND STRUCTURAL DRAWINGS
3. NOT ALL FLOOR DRAINS ARE SHOWN. REFERENCE PLUMBING DRAWINGS FOR MORE INFORMATION
4. ELECTRICAL FLOOR BOXES SHOWN FOR LOCATION PURPOSES. REFERENCE ELECTRICAL DRAWINGS FOR BOX TYPE AND SIZE. FLOOR BOXES TO BE COORDINATED WITH FINAL FURNITURE PACKAGE/LAYOUT. CONTRACTOR TO COORDINATE WITH ARCHITECT ON FINAL PLACEMENT.

ELECTRICAL FLOOR BOX

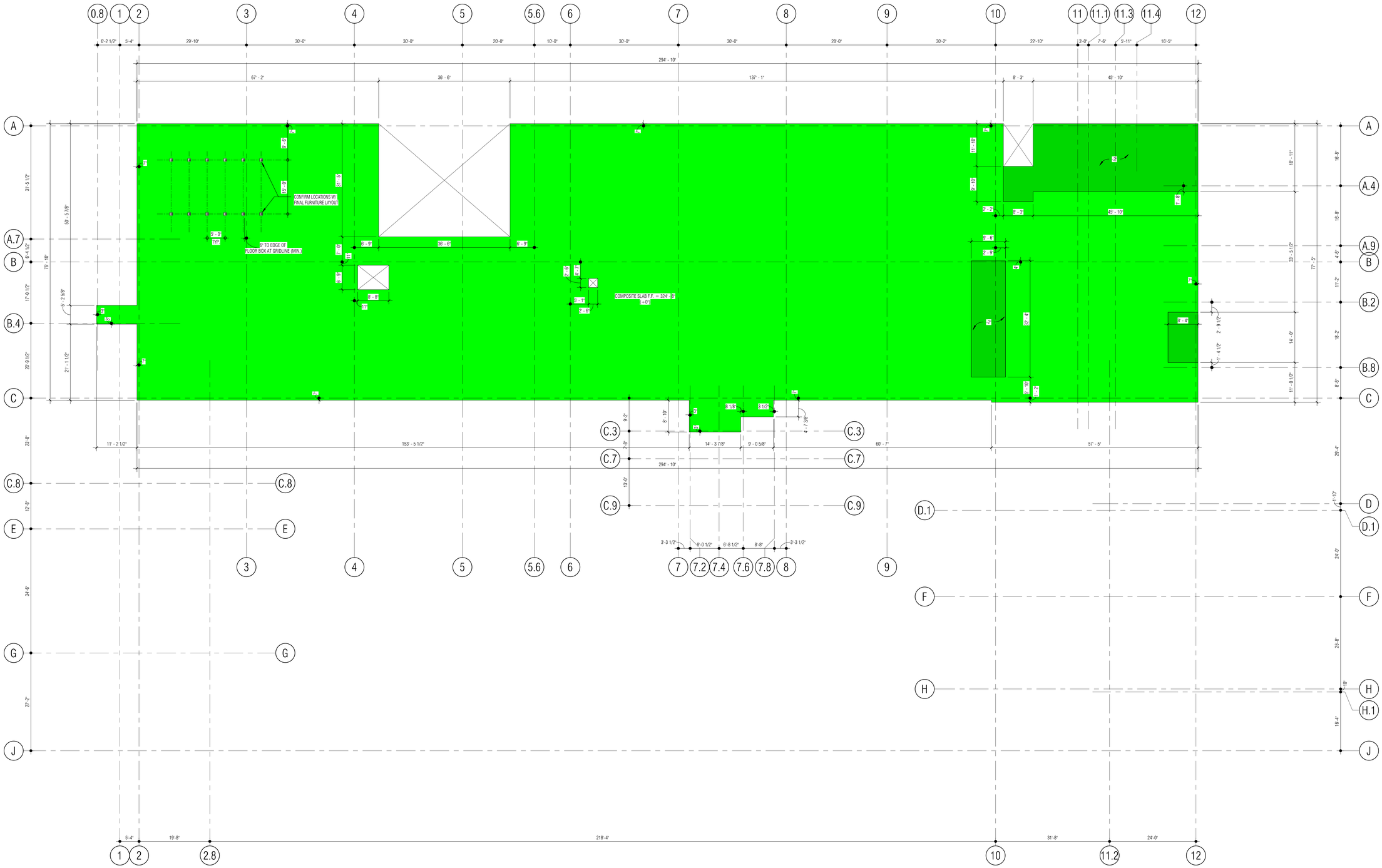

1 LEVEL 2 - SLAB EDGE PLAN

SCALE: 3/32" = 1'-0"

NORTH

Architect: Brinkley Sargent Wigginton Architects (972) 960-9970
Landscape: Kendall Landscape Architecture (214) 739-3226
Structural: L.A. Fuess Partners, Inc (214) 593-1118
MEP: M-E Engineers (214) 741-1589
Civil: KSA Engineers, Inc (903) 236-7700
Technology: M-E Engineers (303) 421-6656

BRINKLEY SARGENT WIGINTON ARCHITECTS

LONGVIEW POLICE DEPARTMENT

518 W. SOUTH ST. LONGVIEW, TEXAS 75601

HISTORY

#	DATE	DESCRIPTION

REGISTERED ARCHITECT STATE OF TEXAS 9941 08/19/2020

LEVEL 2 - SLAB EDGE PLAN

21719

08/19/2020

A202

BID ISSUE

8/19/2020 11:22:11 AM

E:\Revit Locals\JPD_CENTRAL_A19_bscotmer_08-19-2020.rvt

© 2020 Brinkley Sargent Wigginton Architects, Inc.

SLAB EDGE LEGEND

(+ 4") ABOVE FINISH FLOOR	(+ 0") FINISH FLOOR LEVEL	(-1/2") BELOW FINISH FLOOR	(- 2") BELOW FINISH FLOOR	(- 8") BELOW FINISH FLOOR	(- 16") BELOW FINISH FLOOR	(- 24") BELOW FINISH FLOOR	(- 32") BELOW FINISH FLOOR	(- 36") BELOW FINISH FLOOR	(- 48") BELOW FINISH FLOOR

-1/4" FROM ASSOCIATED LEVEL
RECESS AND SLOPE AWAY FROM BLDG.

-3/4" FROM ASSOCIATED LEVEL
RECESS AND SLOPE AWAY FROM BLDG.

SHEET NOTES:

1. THIS DRAWING IS BEST VIEWED/PRINTED IN COLOR. IF PRINTED IN BLACK AND WHITE, IT SHOULD BE PRINTED SO THAT THE GRADIENT COLORS SHOW (PHOTO OR GRADIENT PRINTING)
2. SLAB EDGE PROVIDED FOR HORIZONTAL CONTROL OF POURED SLABS RELATED TO EDGES, OPENINGS, RECESSES, MAJOR PIPE PENETRATIONS, FLOOR BOXES AND BRICK LEDGES. COORDINATE WITH STRUCTURAL DRAWINGS. ALERT ARCHITECT TO DISCREPANCIES BETWEEN ARCHITECTURAL AND STRUCTURAL DRAWINGS
3. NOT ALL FLOOR DRAINS ARE SHOWN. REFERENCE PLUMBING DRAWINGS FOR MORE INFORMATION
4. ELECTRICAL FLOOR BOXES SHOWN FOR LOCATION PURPOSES. REFERENCE ELECTRICAL DRAWINGS FOR BOX TYPE AND SIZE. FLOOR BOXES TO BE COORDINATED WITH FINAL FURNITURE PACKAGE/LAYOUT. CONTRACTOR TO COORDINATE WITH ARCHITECT ON FINAL PLACEMENT.

ELECTRICAL FLOOR BOX

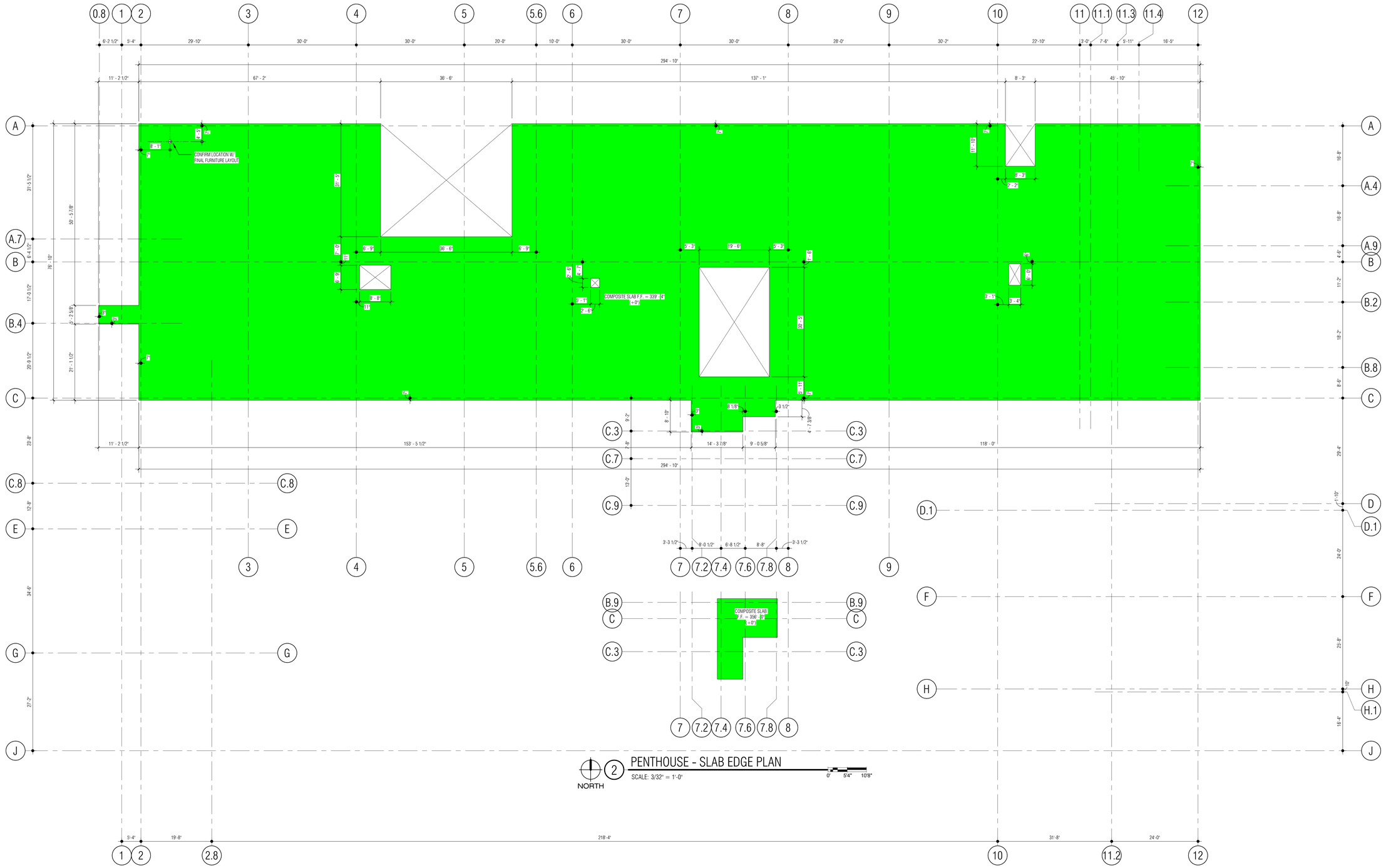

2 PENTHOUSE - SLAB EDGE PLAN
SCALE: 3/32" = 1'-0"
NORTH

1 LEVEL 3 - SLAB EDGE PLAN
SCALE: 3/32" = 1'-0"
NORTH

Architect: Brinkley Sargent Wigginton Architects (972) 960-9970
Landscape: Kendall Landscape Architecture (214) 739-3226
Structural: L.A. Fuess Partners, Inc (214) 593-1118
MEP: M-E Engineers (214) 741-1589
Civil: KSA Engineers, Inc (903) 236-7700
Technology: M-E Engineers (303) 421-6656

BRINKLEY SARGENT WIGINTON ARCHITECTS

LONGVIEW POLICE DEPARTMENT

518 W. SOUTH ST. LONGVIEW, TEXAS 75601

HISTORY

#	DATE	DESCRIPTION

REGISTERED ARCHITECT WILLIAM SARGENT 9941 STATE OF TEXAS
08/19/2020

LEVEL 3 - SLAB EDGE PLAN

21719
08/19/2020

A203

BID ISSUE

8/19/2020 12:09:40 PM
G:\Work Locals\LPD_CENTRAL_A19_bscotmer_08-19-2020.rvt

© 2020 Brinkley Sargent Wigginton Architects, Inc.

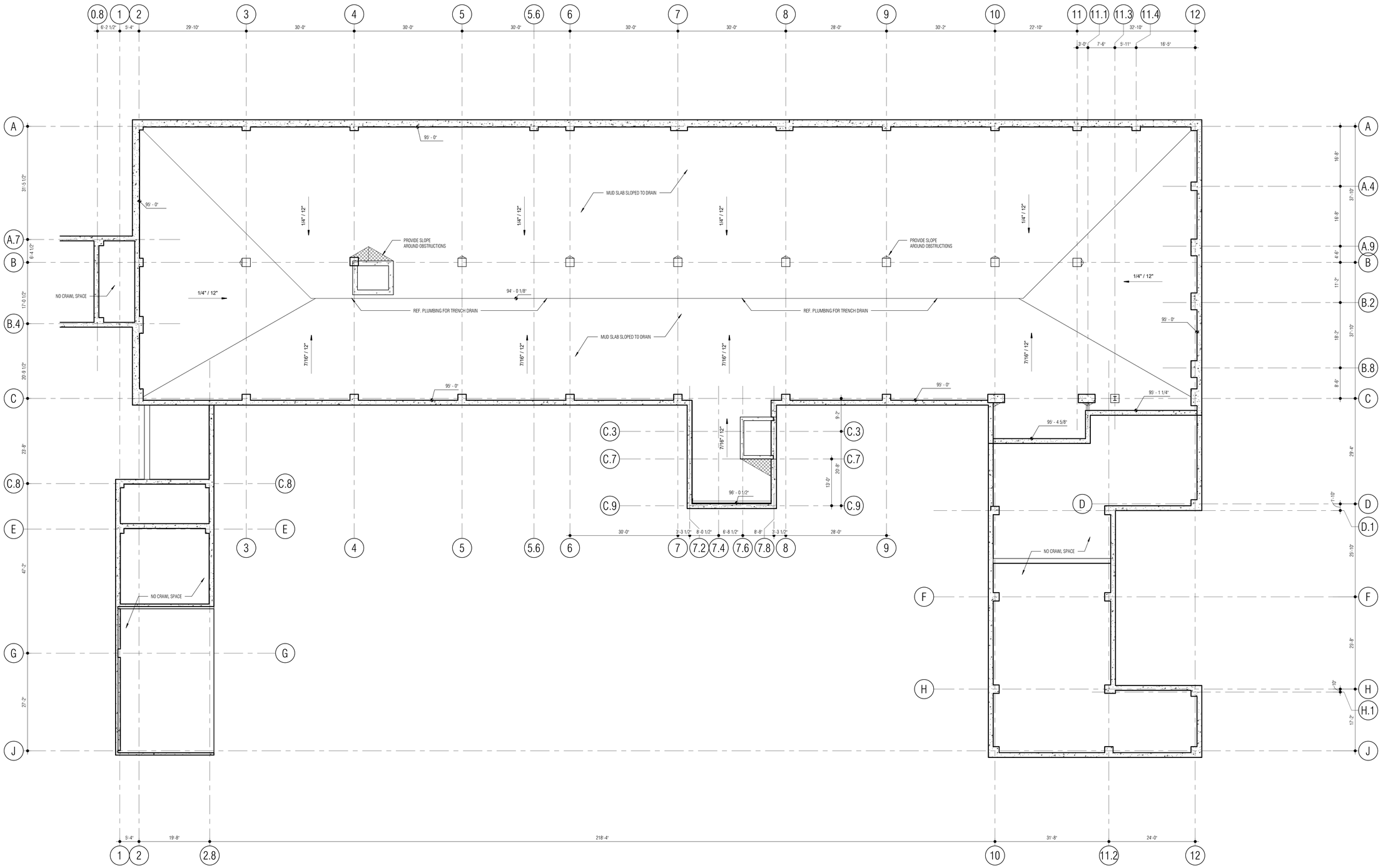

1 CRAWLSPACE / MUD SLAB PLAN

SCALE: 3/32" = 1'-0"

NORTH

Architect: Brinkley Sargent Wigginton Architects (972) 960-9970
Landscape: Kendall Landscape Architecture (214) 739-3226
Structural: L.A. Fuess Partners, Inc (214) 593-1118
MEP: M-E Engineers (214) 741-1589
Civil: KSA Engineers, Inc (903) 236-7700
Technology: M-E Engineers (303) 421-6656

BRINKLEY SARGENT WIGINTON ARCHITECTS

LONGVIEW POLICE DEPARTMENT

518 W. SOUTH ST. LONGVIEW, TEXAS 75601

HISTORY

#	DATE	DESCRIPTION

REGISTERED ARCHITECT BRIAN W. SARGENT 9941 STATE OF TEXAS

08/19/2020

MUDSLAB PLAN

BID ISSUE

21719

08/19/2020

A204

D:\Revit Local\LPD_CENTRAL_A19_bsarmenar_QR-18-2020.rvt

8/19/2020 1:02:16 PM

© 2020 Brinkley Sargent Wigginton Architects, Inc.

ROOM SCHEDULE - LVL 1	
NUMBER	ROOM NAME
1001	VESTIBULE
1002	AFTER HOURS COUNTER
1003	DISPLAY
1004	DISPLAY
1005	LOBBY
1006	SOFT INTERVIEW (5)
1007	PUBLIC TOILET
1008	VESTIBULE
1009	SEX OFFENDER FILES
1011	PUBLIC SERVICE WINDOW
1012	RAMP
1013	TOILET
1014	HOLD. JUV.
1015	COFFEE
1016	SECURITY DESK
1017	RAMP

ROOM SCHEDULE - LVL 1	
NUMBER	ROOM NAME
1018	WAITING (5)
1019	SEX OFFENDER REG.
1021	SEX OFFENDER REG.
1022	PHOTO/FINGERPRINT
1101	VESTIBULE
1102	COMMUNICATIONS CENTER
1103	AUX.CALL TAKER
1104	MANAGER
1105	ADMINISTRATOR
1106	ADMIN. ASST.
1107	TRAINING CONSOLES
1108	TRAINING COORDINATOR
1109	CORRIDOR
1111	CORRIDOR
1112	BREAK
1113	CORRIDOR
1114	CONFERENCE (9)

ROOM SCHEDULE - LVL 1	
NUMBER	ROOM NAME
1115	IT WORKROOM
1116	SERVER ROOM
1117	TOILET
1118	TOILET
1119	LOCKERS
1120	COMPRESSOR
1121	CORRIDOR
1201	VESTIBULE
1202	WORK/PROCESS DESK
1203	SINGLE HOLDING
1204	SINGLE HOLDING
1205	SECURE VESTIBULE
1206	INTERROGATION. (3)
1207	TOILET
1208	SOUND VEST.
1301	RECORDS COUNTER
1302	DELIVERY STOR.

ROOM SCHEDULE - LVL 1	
NUMBER	ROOM NAME
1303	RECORDS CLERKS
1304	COPY/WORK/COFFEE
1305	SUPERVISOR
1306	CORRIDOR
1307	CENTRAL MAIL / OFFICER COUNTER
1308	ELEC. CLOSET
1309	IT/DATA CLOSET
1311	STAFF TOILET
1312	TRASH
1313	HONOR GUARD
1314	PATROL LOCKERS
1315	CORRIDOR
1316	ICE/WATER/UTILITY
1317	ELEVATOR DROP
1318	STAFF VEST.
1319	K-9 OFFICE
1320	CORRIDOR

ROOM SCHEDULE - LVL 1	
NUMBER	ROOM NAME
1401	EVID. WORK / LOCKERS
1402	MAJOR CASE / EVID. WORK
1403	STAFF SERVICE WINDOW
1404	EVIDENCE / PROPERTY WORK
1405	EVID. VIEWING / ATTORNEY
1406	TOILET
1407	SUPERVISOR
1408	COFFEE
1409	EV. PROP. FILES
1411	PROPERTY / STORAGE
1412	STORAGE
1413	WALK-IN COOLER
1414	EVID. PROCESSING
1415	WEAPONS STORAGE
1416	DRUG STORAGE
1417	SHORT TERM & JUVENILE PROP. STOR.
1418	SUPPLY.

ROOM SCHEDULE - LVL 1	
NUMBER	ROOM NAME
1419	SEXUAL ASSUALT PROP. STOR.
1421	LARGE ITEM STORAGE
1422	TUBE STOR.
1423	LONG TERM PROP. STOR.
1424	JAN.
1425	CORRIDOR
1426	LARGE PROP.
1427	VEST. / AFTERHOURS DROP
1428	EVIDENCE TRANSFER
1429	DESTRUCTION
1431	VEHICULAR PROCESSING
1432	CLEAN DRESS
1433	PRIMARY LAB
1434	POWDER PROCESSING
1435	ALTERNATE LIGHT
1436	PES INVESTIGATORS
1437	SERGEANT

ROOM SCHEDULE - LVL 1	
NUMBER	ROOM NAME
1438	COMPARISON LAB
1439	PES STORAGE
1441	TOILET
1442	DRYING CABINETS
1443	CORRIDOR
1501	VESTIBULE
1502	K-9 STORAGE
1503	TOILET
1504	CENTRAL JAN.
1505	CORRIDOR
1506	MECHANICAL
1508	VEHICLE MAINT. BAY
1509	FLEET STOR./WORK
1511	FLEET OFFICE
1512	EMERGENCY POWER
1513	NORMAL POWER
1514	COMPRESSOR

ROOM SCHEDULE - LVL 1	
NUMBER	ROOM NAME
1515	CLEANING BAY
1516	SWAT VEHICLE
1517	VESTIBULE
1518	SWAT STORAGE / LOCKERS / EQUIP.
1519	WEAPON CLEANING
1521	ARMORY
1522	SPRINKLER
1601	BIKE PATROL
1602	COMPRESSOR
1603	PATROL/TRAFFIC STOR.
1604	GOLF CARTS
1605	MOTORCYCLE
1606	TRAILERS
1607	DRY VALVE/COMPRESSOR
1609	VEST.
EL-01	ELEVATOR
EL-02	STAFF ELEVATOR
ST-01	LOBBY STAIR
ST-02	STAFF STAIR
ST-03	EXIT STAIR

LEGEND

- STUD WALL (NOT TO DECK)
- CMU WALL (NOT TO DECK)
- WALL (TO DECK)
- 1-HOUR RATED WALL
- 2-HOUR RATED WALL
- SECURE PERIMETER A (TO DECK)
- SECURE PERIMETER B (TO DECK)
- SECURE PERIMETER B (NOT TO DECK)

SHEET NOTES:

1. STUD WALL DIMENSIONS ARE FACE OF STUD UNLESS NOTED OTHERWISE
2. CMU WALL DIMENSIONS ARE FACE OF CMU UNLESS NOTED OTHERWISE
3. PER SPECIFICATION 09 29 00 GYPSUM BOARD, USE TILE BACKER BOARD IN LIEU OF GYP AT LOCATIONS WHERE TILE IS CALLED OUT AS A WALL FINISH, REFERENCE FINISH SCHEDULE, FINISH PLAN, & INTERIOR ELEVATIONS
4. GRIND RADIUS PROFILE AT ALL CMU OUTSIDE CORNERS
5. REFERENCE **1/A701** FOR PARTITION TYPES
6. REFERENCE ENLARGED PLANS FOR ADDITIONAL DIMENSIONS, TAGS AND NOTES
7. CEILINGS AT 9' - 0" ABOVE FINISH FLOOR U.N.O.

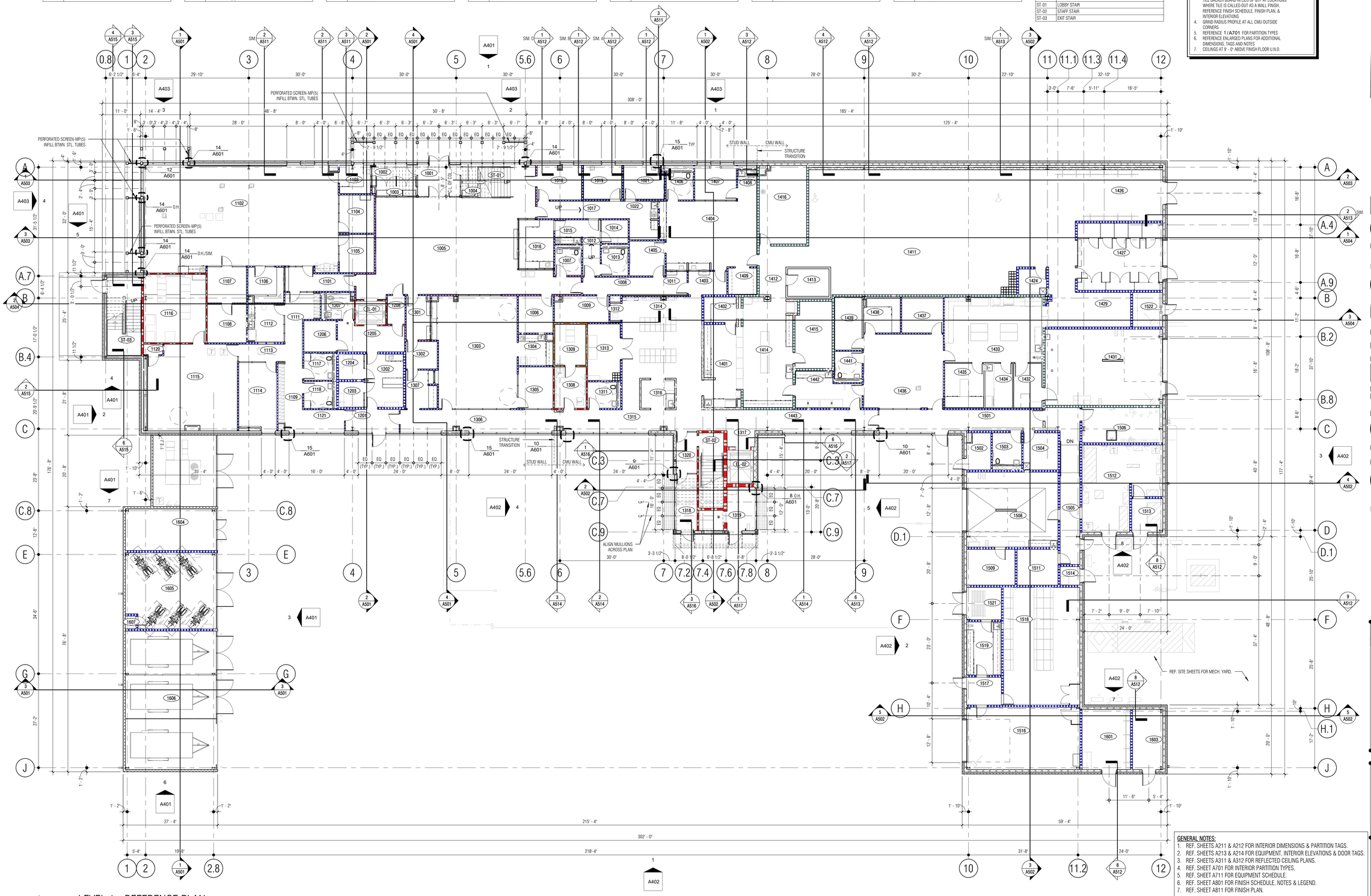

GENERAL NOTES:

1. REF. SHEETS A211 & A212 FOR INTERIOR DIMENSIONS & PARTITION TAGS.
2. REF. SHEETS A213 & A214 FOR EQUIPMENT, INTERIOR ELEVATIONS & DOOR TAGS.
3. REF. SHEETS A311 & A312 FOR REFLECTED CEILING PLANS.
4. REF. SHEET A701 FOR INTERIOR PARTITION TYPES.
5. REF. SHEET A711 FOR EQUIPMENT SCHEDULE.
6. REF. SHEET A801 FOR FINISH SCHEDULE, NOTES & LEGEND.
7. REF. SHEET A811 FOR FINISH PLAN.

1 LEVEL 1 - REFERENCE PLAN

SCALE: 3/32" = 1'-0"

NORTH

Architect: Brinkley Sargent Wigginton Architects (972) 960-9970
Landscape: Kendall Landscape Architecture (214) 739-3226
Structural: L.A. Fuess Partners, Inc (214) 593-1118
MEP: M-E Engineers (214) 741-1589
Civil: KSA Engineers, Inc (903) 236-7700
Technology: M-E Engineers (303) 421-6656

BRINKLEY SARGENT WIGINTON ARCHITECTS

LONGVIEW POLICE DEPARTMENT

518 W. SOUTH ST. LONGVIEW, TEXAS 75601

HISTORY		
#	DATE	DESCRIPTION

REGISTERED ARCHITECT 994 STATE OF TEXAS 08/19/2020

LEVEL 1 - REFERENCE PLAN

BID ISSUE

21719

08/19/2020

A210

8/19/2020 1:03:49 PM

E:\Revit Locals\LPD_CENTRAL_A19_Jacobsen_08-19-2020.rvt

© 2020 Brinkley Sargent Wigginton Architects, Inc.

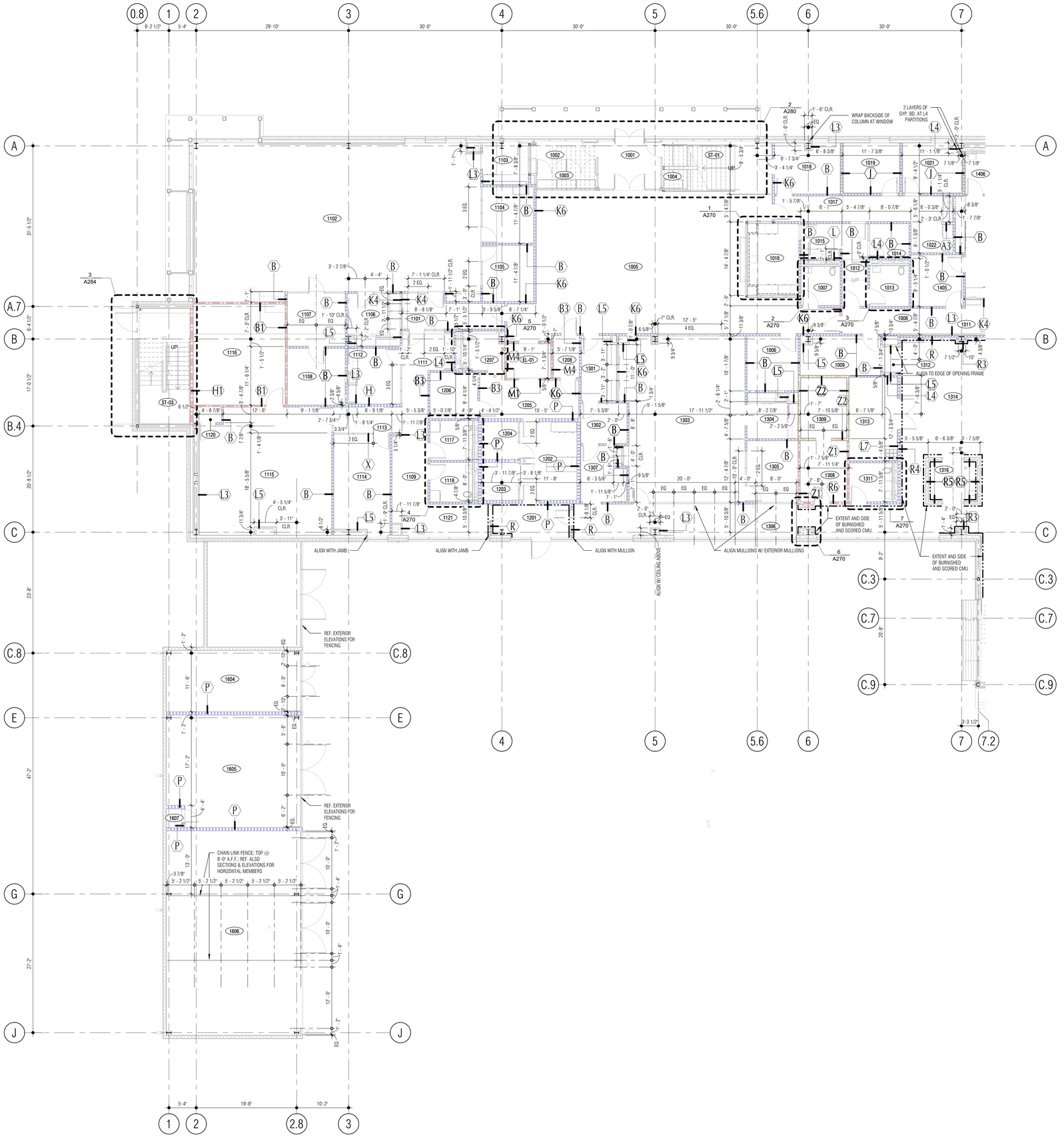

1 LEVEL 1 - FLOOR PLAN (WEST) - WALL TAGS, DIMENSIONS

SCALE: 1/8" = 1'-0"

NORTH

LEGEND

- STUD WALL (NOT TO DECK)
- CMU WALL (NOT TO DECK)
- WALL (TO-DECK)
- 1-HOUR RATED WALL
- 2-HOUR RATED WALL
- SECURE PERIMETER A (TO DECK)
- SECURE PERIMETER B (TO DECK)
- SECURE PERIMETER B (NOT TO DECK)

SHEET NOTES:

1. STUD WALL DIMENSIONS ARE FACE OF STUD UNLESS NOTED OTHERWISE
2. CMU WALL DIMENSIONS ARE FACE OF CMU UNLESS NOTED OTHERWISE
3. PER SPECIFICATION 09 29 00 GYPSUM BOARD, USE TILE BACKER BOARD IN LIEU OF GYP AT LOCATIONS WHERE TILE IS CALLED OUT AS A WALL FINISH. REFERENCE FINISH SCHEDULE, FINISH PLAN, & INTERIOR ELEVATIONS
4. GRIND RADIUS PROFILE AT ALL CMU OUTSIDE CORNERS
5. REFERENCE **1/A701** FOR PARTITION TYPES
6. REFERENCE ENLARGED PLANS FOR ADDITIONAL DIMENSIONS, TAGS AND NOTES
7. CEILINGS AT 9' - 0" ABOVE FINISH FLOOR U.N.O.

ROOM SCHEDULE - LEVEL 1

NUMBER	ROOM NAME
1001	VESTIBULE
1002	AFTER HOURS COUNTER
1003	DISPLAY
1004	DISPLAY
1005	LOBBY
1006	SOFT INTERVIEW (5)
1007	PUBLIC TOILET
1008	VESTIBULE
1009	SEX OFFENDER FILES
1011	PUBLIC SERVICE WINDOW
1012	RAMP
1013	TOILET
1014	HOLD. JUV.
1015	COFFEE
1016	SECURITY DESK
1017	RAMP
1018	WAITING (5)
1019	SEX OFFENDER REG.
1021	SEX OFFENDER REG.
1022	PHOTO/FINGERPRINT
1101	VESTIBULE
1102	COMMUNICATIONS CENTER
1103	AUX CALL TAKER
1104	MANAGER
1105	ADMINISTRATOR
1106	ADMIN. ASST.
1107	TRAINING CONSOLES
1108	TRAINING COORDINATOR
1109	CORRIDOR
1111	CORRIDOR
1112	BREAK
1113	CORRIDOR
1114	CONFERENCE (9)
1115	IT WORKROOM
1116	SERVER ROOM
1117	TOILET
1118	TOILET
1119	LOCKERS
1120	COMPRESSOR
1121	CORRIDOR
1201	VESTIBULE
1202	WORK/PROCESS DESK
1203	SINGLE HOLDING
1204	SINGLE HOLDING
1205	SECURE VESTIBULE
1206	INTERROGATION (3)
1207	TOILET
1208	SOUND VEST.
1301	RECORDS COUNTER
1302	DELIVERY STOR.
1303	RECORDS CLERKS
1304	COPY/WORK/COFFEE
1305	SUPERVISOR
1306	CORRIDOR
1307	CENTRAL MAIL / OFFICER COUNTER
1308	ELEC. CLOSET
1309	IT/DATA CLOSET
1311	STAFF TOILET
1312	TRASH
1313	HONOR GUARD
1314	PATROL LOCKERS
1315	CORRIDOR
1316	ICE/WATER/UTILITY
1317	ELEVATOR DROP
1318	STAFF VEST.
1319	K-9 OFFICE
1320	CORRIDOR
1401	EVID. WORK / LOCKERS
1402	MAJOR CASE / EVID. WORK
1403	STAFF SERVICE WINDOW
1404	EVIDENCE / PROPERTY WORK
1405	EVID. VIEWING / ATTORNEY
1406	TOILET
1407	SUPERVISOR
1408	COFFEE
1409	EV. PROP. FILES
1411	PROPERTY / STORAGE
1412	STORAGE
1413	WALK-IN COOLER
1414	EVID. PROCESSING
1415	WEAPONS STORAGE
1416	DRUG STORAGE
1417	SHORT TERM & JUVENILE PROP. STOR.
1418	SUPPLY
1419	SEXUAL ASSUALT PROP. STOR.
1421	LARGE ITEM STORAGE
1422	TUBE STOR.
1423	LONG TERM PROP. STOR.
1424	JAN.
1425	CORRIDOR
1426	LARGE PROP.
1427	VEST. / AFTERHOURS DROP
1428	EVIDENCE TRANSFER
1429	DESTRUCTION
1431	VEHICULAR PROCESSING
1432	CLEAN DRESS
1433	PRIMARY LAB
1434	POWDER PROCESSING
1435	ALTERNATE LIGHT
1436	PES INVESTIGATORS
1437	SERGEANT
1438	COMPARISON LAB
1439	PES STORAGE
1441	TOILET
1442	DRYING CABINETS
1443	CORRIDOR
1501	VESTIBULE
1502	K-9 STORAGE
1503	TOILET
1504	CENTRAL JAN.
1505	CORRIDOR
1506	MECHANICAL
1508	VEHICLE MAINT. BAY
1509	FLEET STOR./WORK
1511	FLEET OFFICE
1512	EMERGENCY POWER
1513	NORMAL POWER
1514	COMPRESSOR
1515	CLEANING BAY
1516	SWAT VEHICLE
1517	VESTIBULE
1518	SWAT STORAGE / LOCKERS / EQUIP.
1519	WEAPON CLEANING
1521	ARMORY
1522	SPRINKLER
1601	BIKE PATROL
1602	COMPRESSOR
1603	PATROL/TRAFFIC STOR.
1604	GOLF CARTS
1605	MOTORCYCLE
1606	TRAILERS
1607	DRY VALVE/COMPRESSOR
1609	VEST.
EL-01	ELEVATOR
EL-02	STAFF ELEVATOR
ST-01	LOBBY STAIR
ST-02	STAFF STAIR
ST-03	EXIT STAIR

GENERAL NOTES:

1. REF. SHEET A201 FOR EXTERIOR DIMENSIONS, PLAN DETAILS, BUILDING & WALL SECTION CALLOUTS.
2. REF. SHEET A213 FOR EQUIPMENT, INTERIOR ELEVATIONS & DOOR TAGS.
3. REF. SHEET A311 FOR REFLECTED CEILING PLAN.
4. REF. SHEET A701 FOR INTERIOR PARTITION TYPES.
5. REF. SHEET A711 FOR EQUIPMENT SCHEDULE.
6. REF. SHEET A801 FOR FINISH SCHEDULE, NOTES & LEGEND.
7. REF. SHEET A811 FOR FINISH PLAN.

Architect: Brinkley Sargent Wigginton Architects (972) 960-9970
Landscape: Kendall Landscape Architecture (214) 739-3226
Structural: L.A. Fuess Partners, Inc (214) 593-1118
MEP: M-E Engineers (214) 741-1589
Civil: KSA Engineers, Inc (903) 236-7700
Technology: M-E Engineers (303) 421-6656

BRINKLEY SARGENT WIGINTON ARCHITECTS

LONGVIEW POLICE DEPARTMENT

518 W. SOUTH ST. LONGVIEW, TEXAS 75601

HISTORY

#	DATE	DESCRIPTION

REGISTERED ARCHITECT 9941 STATE OF TEXAS
08/19/2020

LEVEL 1 - FLOOR PLAN (WEST) - WALL TAGS, DIMENSIONS

21719
08/19/2020

A211

BID ISSUE

8/19/2020 1:04:51 PM

E:\Revit Locals\LPD_CENTRAL_A19_Jacobsen_08-19-2020.rvt

© 2020 Brinkley Sargent Wigginton Architects, Inc.

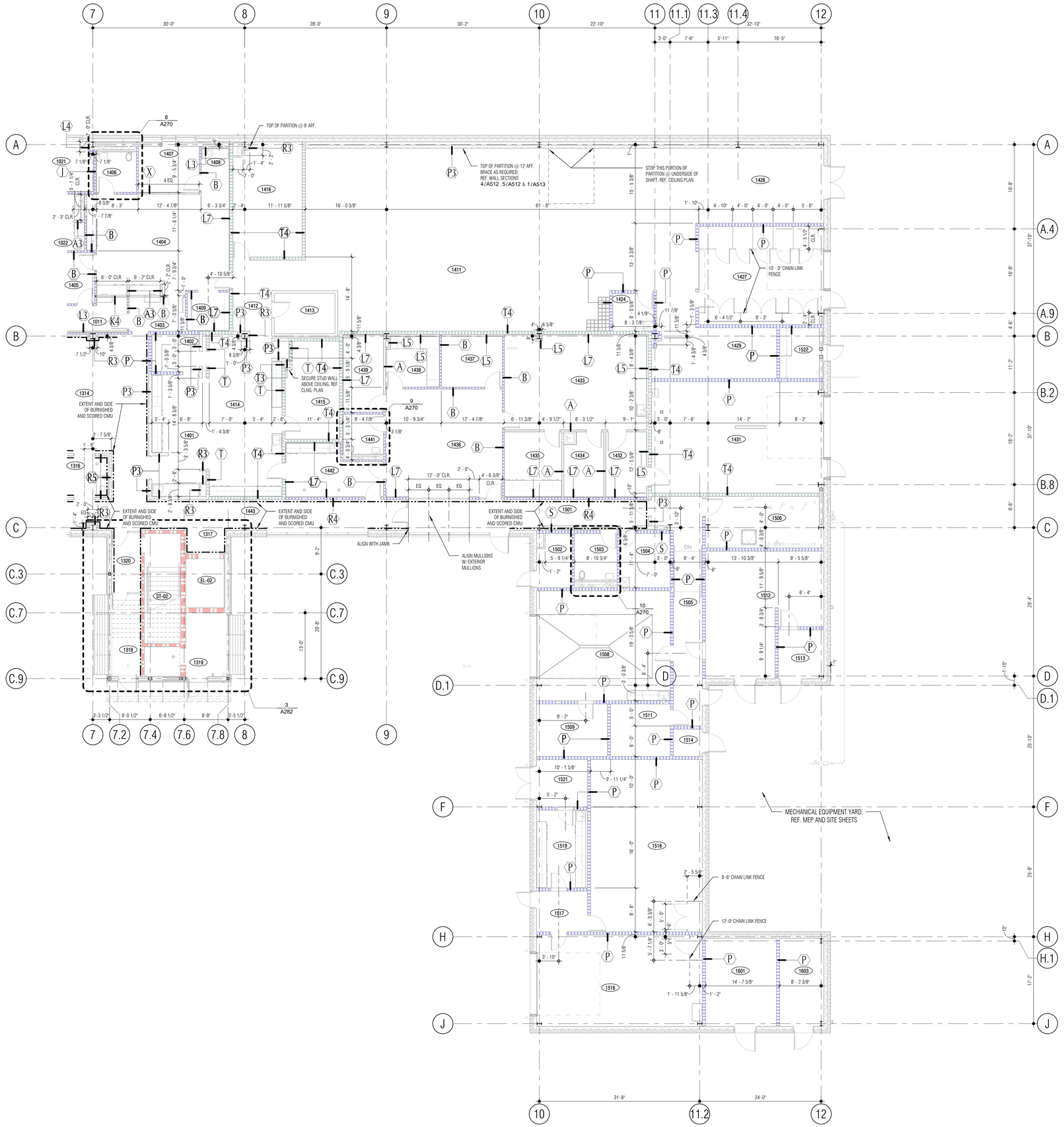

LEGEND

- STUD WALL (NOT TO DECK)
- CMU WALL (NOT TO DECK)
- WALL (TO-DECK)
- 1-HOUR RATED WALL
- 2-HOUR RATED WALL
- SECURE PERIMETER A (TO DECK)
- SECURE PERIMETER B (TO DECK)
- SECURE PERIMETER B (NOT TO DECK)

SHEET NOTES:

1. STUD WALL DIMENSIONS ARE FACE OF STUD UNLESS NOTED OTHERWISE
2. CMU WALL DIMENSIONS ARE FACE OF CMU UNLESS NOTED OTHERWISE
3. PER SPECIFICATION 09 29 00 GYPSUM BOARD, USE TILE BACKER BOARD IN LIEU OF GYP AT LOCATIONS WHERE TILE IS CALLED OUT AS A WALL FINISH. REFERENCE FINISH SCHEDULE, FINISH PLAN, & INTERIOR ELEVATIONS
4. GRIND RADIUS PROFILE AT ALL CMU OUTSIDE CORNERS
5. REFERENCE **1/A701** FOR PARTITION TYPES
6. REFERENCE ENLARGED PLANS FOR ADDITIONAL DIMENSIONS, TAGS AND NOTES
7. CEILINGS AT 9 - 0" ABOVE FINISH FLOOR U.N.O.

ROOM SCHEDULE - LEVEL 1

NUMBER	ROOM NAME
1001	VESTIBULE
1002	AFTER HOURS COUNTER
1003	DISPLAY
1004	DISPLAY
1005	LOBBY
1006	SOFT INTERVIEW (5)
1007	PUBLIC TOILET
1008	VESTIBULE
1009	SEX OFFENDER FILES
1011	PUBLIC SERVICE WINDOW
1012	RAMP
1013	TOILET
1014	HOLD. JUV.
1015	COFFEE
1016	SECURITY DESK
1017	RAMP
1018	WAITING (5)
1019	SEX OFFENDER REG.
1021	SEX OFFENDER REG.
1022	PHOTO/FINGERPRINT
1101	VESTIBULE
1102	COMMUNICATIONS CENTER
1103	AUX CALL TAKER
1104	MANAGER
1105	ADMINISTRATOR
1106	ADMIN. ASST.
1107	TRAINING CONSOLES
1108	TRAINING COORDINATOR
1109	CORRIDOR
1111	CORRIDOR
1112	BREAK
1113	CORRIDOR
1114	CONFERENCE (9)
1115	IT WORKROOM
1116	SERVER ROOM
1117	TOILET
1118	TOILET
1119	LOCKERS
1120	COMPRESSOR
1121	CORRIDOR
1201	VESTIBULE
1202	WORK/PROCESS DESK
1203	SINGLE HOLDING
1204	SINGLE HOLDING
1205	SECURE VESTIBULE
1206	INTERROGATION (3)
1207	TOILET
1208	SOUND VEST.
1301	RECORDS COUNTER
1302	DELIVERY STOR.
1303	RECORDS CLERKS
1304	COPY/WORK/COFFEE
1305	SUPERVISOR
1306	CORRIDOR
1307	CENTRAL MAIL / OFFICER COUNTER
1308	ELEC. CLOSET
1309	IT/DATA CLOSET
1311	STAFF TOILET
1312	TRASH
1313	HONOR GUARD
1314	PATROL LOCKERS
1315	CORRIDOR
1316	ICE/WATER/UTILITY
1317	ELEVATOR DROP
1318	STAFF VEST.
1319	K-9 OFFICE
1320	CORRIDOR
1401	EVID. WORK / LOCKERS
1402	MAJOR CASE / EVID. WORK
1403	STAFF SERVICE WINDOW
1404	EVIDENCE / PROPERTY WORK
1405	EVID. VIEWING / ATTORNEY
1406	TOILET
1407	SUPERVISOR
1408	COFFEE
1409	EV. PROP. FILES
1411	PROPERTY / STORAGE
1412	STORAGE
1413	WALK-IN COOLER
1414	EVID. PROCESSING
1415	WEAPONS STORAGE
1416	DRUG STORAGE
1417	SHORT TERM & JUVENILE PROP. STOR.
1418	SUPPLY
1419	SEXUAL ASSUALT PROP. STOR.
1421	LARGE ITEM STORAGE
1422	TUBE STOR.
1423	LONG TERM PROP. STOR.
1424	JAN.
1425	CORRIDOR
1426	LARGE PROP.
1427	VEST. / AFTERHOURS DROP
1428	EVIDENCE TRANSFER
1429	DESTRUCTION
1431	VEHICULAR PROCESSING
1432	CLEAN DRESS
1433	PRIMARY LAB
1434	POWDER PROCESSING
1435	ALTERNATE LIGHT
1436	PES INVESTIGATORS
1437	SERGEANT
1438	COMPARISON LAB
1439	PES STORAGE
1441	TOILET
1442	DRYING CABINETS
1443	CORRIDOR
1501	VESTIBULE
1502	K-9 STORAGE
1503	TOILET
1504	CENTRAL JAN.
1505	CORRIDOR
1506	MECHANICAL
1508	VEHICLE MAINT. BAY
1509	FLEET STOR./WORK
1511	FLEET OFFICE
1512	EMERGENCY POWER
1513	NORMAL POWER
1514	COMPRESSOR
1515	CLEANING BAY
1516	SWAT VEHICLE
1517	VESTIBULE
1518	SWAT STORAGE / LOCKERS / EQUIP.
1519	WEAPON CLEANING
1521	ARMORY
1522	SPRINKLER
1601	BIKE PATROL
1602	COMPRESSOR
1603	PATROL/TRAFFIC STOR.
1604	GOLF CARTS
1605	MOTORCYCLE
1606	TRAILERS
1607	DRY VALVE/COMPRESSOR
1609	VEST.
EL-01	ELEVATOR
EL-02	STAFF ELEVATOR
ST-01	LOBBY STAIR
ST-02	STAFF STAIR
ST-03	EXIT STAIR

GENERAL NOTES:

1. REF. SHEET A201 FOR EXTERIOR DIMENSIONS, PLAN DETAILS, BUILDING & WALL SECTION CALLOUTS.
2. REF. SHEET A214 FOR EQUIPMENT, INTERIOR ELEVATIONS & DOOR TAGS.
3. REF. SHEET A312 FOR REFLECTED CEILING PLAN.
4. REF. SHEET A701 FOR INTERIOR PARTITION TYPES.
5. REF. SHEET A711 FOR EQUIPMENT SCHEDULE.
6. REF. SHEET A801 FOR FINISH SCHEDULE, NOTES & LEGEND.
7. REF. SHEET A811 FOR FINISH PLAN.

1 LEVEL 1 - FLOOR PLAN (EAST) - WALL TAGS, DIMENSIONS

SCALE: 1/8" = 1'-0"

NORTH

Architect: Brinkley Sargent Wigginton Architects (972) 960-9970
Landscape: Kendall Landscape Architecture (214) 739-3226
Structural: L.A. Fuess Partners, Inc (214) 593-1118
MEP: M-E Engineers (214) 741-1589
Civil: KSA Engineers, Inc (903) 236-7700
Technology: M-E Engineers (303) 421-6656

BRINKLEY SARGENT WIGINTON ARCHITECTS

LONGVIEW POLICE DEPARTMENT

518 W. SOUTH ST. LONGVIEW, TEXAS 75601

HISTORY

#	DATE	DESCRIPTION

REGISTERED ARCHITECT RICHARD SARGENT WIGINTON 9941 STATE OF TEXAS

08/19/2020

LEVEL 1 - FLOOR PLAN (EAST) - WALL TAGS, DIMENSIONS

21719

08/19/2020

A212

BID ISSUE

6/21/2020 6:48:19 PM

D:\Revit Locals\LPD_CENTRAL_A19_Plansperms.rvt

© 2020 Brinkley Sargent Wigginton Architects, Inc.

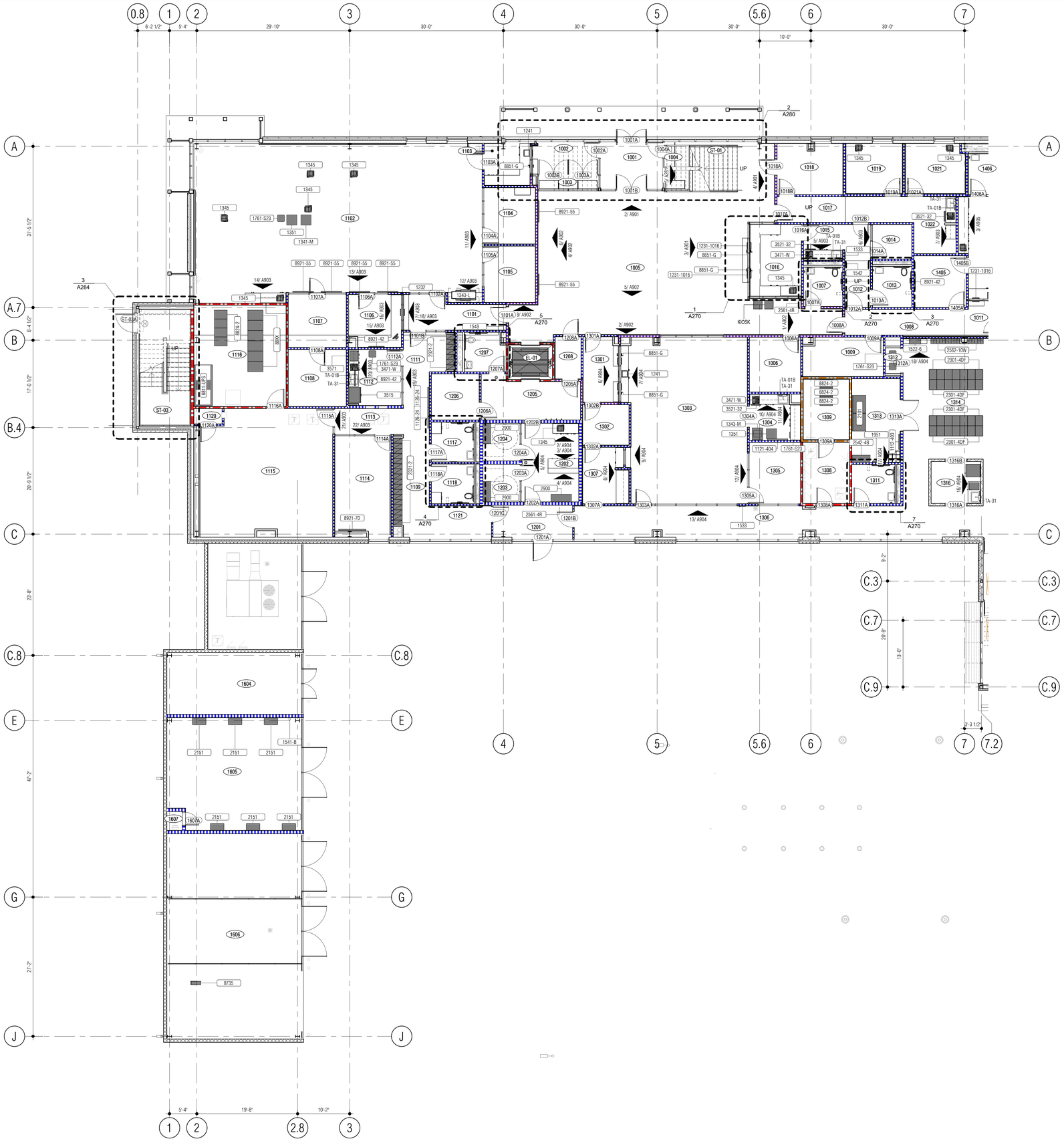

LEGEND

- STUD WALL (NOT TO DECK)
- CMU WALL (NOT TO DECK)
- WALL (TO-DECK)
- 1-HOUR RATED WALL
- 2-HOUR RATED WALL
- SECURE PERIMETER A (TO DECK)
- SECURE PERIMETER B (TO DECK)
- SECURE PERIMETER B (NOT TO DECK)

SHEET NOTES:

1. STUD WALL DIMENSIONS ARE FACE OF STUD UNLESS NOTED OTHERWISE
2. CMU WALL DIMENSIONS ARE FACE OF CMU UNLESS NOTED OTHERWISE
3. PER SPECIFICATION 09 29 00 GYPSUM BOARD, USE TILE BACKER BOARD IN LIEU OF GYP AT LOCATIONS WHERE TILE IS CALLED OUT AS A WALL FINISH. REFERENCE FINISH SCHEDULE, FINISH PLAN, & INTERIOR ELEVATIONS
4. GRIND RADIUS PROFILE AT ALL CMU OUTSIDE CORNERS
5. REFERENCE **1/A701** FOR PARTITION TYPES
6. REFERENCE ENLARGED PLANS FOR ADDITIONAL DIMENSIONS, TAGS AND NOTES
7. CEILINGS AT 9' - 0" ABOVE FINISH FLOOR U.N.O.

ROOM SCHEDULE - LEVEL 1

NUMBER	ROOM NAME
1001	VESTIBULE
1002	AFTER HOURS COUNTER
1003	DISPLAY
1004	DISPLAY
1005	LOBBY
1006	SOFT INTERVIEW (5)
1007	PUBLIC TOILET
1008	VESTIBULE
1009	SEX OFFENDER FILES
1011	PUBLIC SERVICE WINDOW
1012	RAMP
1013	TOILET
1014	HOLD. JUV.
1015	COFFEE
1016	SECURITY DESK
1017	RAMP
1018	WAITING (5)
1019	SEX OFFENDER REG.
1021	SEX OFFENDER REG.
1022	PHOTO/FINGERPRINT
1101	VESTIBULE
1102	COMMUNICATIONS CENTER
1103	AUX CALL TAKER
1104	MANAGER
1105	ADMINISTRATOR
1106	ADMIN. ASST.
1107	TRAINING CONSOLES
1108	TRAINING COORDINATOR
1109	CORRIDOR
1111	CORRIDOR
1112	BREAK
1113	CORRIDOR
1114	CONFERENCE (9)
1115	IT WORKROOM
1116	SERVER ROOM
1117	TOILET
1118	TOILET
1119	LOCKERS
1120	COMPRESSOR
1121	CORRIDOR
1201	VESTIBULE
1202	WORK/PROCESS DESK
1203	SINGLE HOLDING
1204	SINGLE HOLDING
1205	SECURE VESTIBULE
1206	INTERROGATION (3)
1207	TOILET
1208	SOUND VEST.
1301	RECORDS COUNTER
1302	DELIVERY STOR.
1303	RECORDS CLERKS
1304	COPY/WORK/COFFEE
1305	SUPERVISOR
1306	CORRIDOR
1307	CENTRAL MAIL / OFFICER COUNTER
1308	ELEC. CLOSET
1309	IT/DATA CLOSET
1311	STAFF TOILET
1312	TRASH
1313	HONOR GUARD
1314	PATROL LOCKERS
1315	CORRIDOR
1316	ICE/WATER/UTILITY
1317	ELEVATOR DROP
1318	STAFF VEST.
1319	K-9 OFFICE
1320	CORRIDOR
1401	EVID. WORK / LOCKERS
1402	MAJOR CASE / EVID. WORK
1403	STAFF SERVICE WINDOW
1404	EVIDENCE / PROPERTY WORK
1405	EVID. VIEWING / ATTORNEY
1406	TOILET
1407	SUPERVISOR
1408	COFFEE
1409	EV. PROP. FILES
1411	PROPERTY / STORAGE
1412	STORAGE
1413	WALK-IN COOLER
1414	EVID. PROCESSING
1415	WEAPONS STORAGE
1416	DRUG STORAGE
1417	SHORT TERM & JUVENILE PROP. STOR.
1418	SUPPLY
1419	SEXUAL ASSUALT PROP. STOR.
1421	LARGE ITEM STORAGE
1422	TUBE STOR.
1423	LONG TERM PROP. STOR.
1424	JAN.
1425	CORRIDOR
1426	LARGE PROP.
1427	VEST. / AFTERHOURS DROP
1428	EVIDENCE TRANSFER
1429	DESTRUCTION
1431	VEHICULAR PROCESSING
1432	CLEAN DRESS
1433	PRIMARY LAB
1434	POWDER PROCESSING
1435	ALTERNATE LIGHT
1436	PES INVESTIGATORS
1437	SERGEANT
1438	COMPARISON LAB
1439	PES STORAGE
1441	TOILET
1442	DRYING CABINETS
1443	CORRIDOR
1501	VESTIBULE
1502	K-9 STORAGE
1503	TOILET
1504	CENTRAL JAN.
1505	CORRIDOR
1506	MECHANICAL
1508	VEHICLE MAINT. BAY
1509	FLEET STOR./WORK
1511	FLEET OFFICE
1512	EMERGENCY POWER
1513	NORMAL POWER
1514	COMPRESSOR
1515	CLEANING BAY
1516	SWAT VEHICLE
1517	VESTIBULE
1518	SWAT STORAGE / LOCKERS / EQUIP.
1519	WEAPON CLEANING
1521	ARMORY
1522	SPRINKLER
1601	BIKE PATROL
1602	COMPRESSOR
1603	PATROL/TRAFFIC STOR.
1604	GOLF CARTS
1605	MOTORCYCLE
1606	TRAILERS
1607	DRY VALVE/COMPRESSOR
1609	VEST.
EL-01	ELEVATOR
EL-02	STAFF ELEVATOR
ST-01	LOBBY STAIR
ST-02	STAFF STAIR
ST-03	EXIT STAIR

Architect: Brinkley Sargent Wigginton Architects (972) 960-9970
Landscape: Kendall Landscape Architecture (214) 739-3226
Structural: L.A. Fuess Partners, Inc (214) 593-1118
MEP: M-E Engineers (214) 741-1589
Civil: KSA Engineers, Inc (903) 236-7700
Technology: M-E Engineers (303) 421-6656

BRINKLEY SARGENT WIGINTON ARCHITECTS

LONGVIEW POLICE DEPARTMENT

518 W. SOUTH ST. LONGVIEW, TEXAS 75601

HISTORY

#	DATE	DESCRIPTION

REGISTERED ARCHITECT 9941 STATE OF TEXAS
08/19/2020

GENERAL NOTES:

1. REF. SHEET A201 FOR EXTERIOR DIMENSIONS, PLAN DETAILS, BUILDING & WALL SECTION CALLOUTS.
2. REF. SHEET A211 FOR INTERIOR DIMENSIONS & PARTITION TAGS.
3. REF. SHEET A311 FOR REFLECTED CEILING PLAN.
4. REF. SHEET A701 FOR INTERIOR PARTITION TYPES.
5. REF. SHEET A711 FOR EQUIPMENT SCHEDULE.
6. REF. SHEET A801 FOR FINISH SCHEDULE, NOTES & LEGEND.
7. REF. SHEET A811 FOR FINISH PLAN.

1 LEVEL 1 - FLOOR PLAN (WEST) - EQUIPMENT, INTERIOR ELEVATIONS, DOOR TAGS

SCALE: 1/8" = 1'-0"

NORTH

0' 4'0" 8'0"

LEVEL 1 - FLOOR PLAN (WEST) - EQUIPMENT, INTERIOR ELEVATIONS, DOOR TAGS

21719

08/19/2020

A213

BID ISSUE

8/19/2020 1:07:42 PM

D:\Revit Locals\LPD_CENTRAL_A19_Jacobsen_08-19-2020.rvt

© 2020 Brinkley Sargent Wigginton Architects, Inc.

LEGEND

- STUD WALL (NOT TO DECK)
- CMU WALL (NOT TO DECK)
- WALL (TO-DECK)
- 1-HOUR RATED WALL
- 2-HOUR RATED WALL
- SECURE PERIMETER A (TO DECK)
- SECURE PERIMETER B (TO DECK)
- SECURE PERIMETER B (NOT TO DECK)

SHEET NOTES:

1. STUD WALL DIMENSIONS ARE FACE OF STUD UNLESS NOTED OTHERWISE
2. CMU WALL DIMENSIONS ARE FACE OF CMU UNLESS NOTED OTHERWISE
3. PER SPECIFICATION 09 29 00 GYPSUM BOARD, USE TILE BACKER BOARD IN LIEU OF GYP AT LOCATIONS WHERE TILE IS CALLED OUT AS A WALL FINISH. REFERENCE FINISH SCHEDULE, FINISH PLAN, & INTERIOR ELEVATIONS
4. GRIND RADIUS PROFILE AT ALL CMU OUTSIDE CORNERS
5. REFERENCE **1/A701** FOR PARTITION TYPES
6. REFERENCE ENLARGED PLANS FOR ADDITIONAL DIMENSIONS, TAGS AND NOTES
7. CEILINGS AT 9' - 0" ABOVE FINISH FLOOR U.N.O.

ROOM SCHEDULE - LEVEL 1

NUMBER	ROOM NAME
1001	VESTIBULE
1002	AFTER HOURS COUNTER
1003	DISPLAY
1004	DISPLAY
1005	LOBBY
1006	SOFT INTERVIEW (5)
1007	PUBLIC TOILET
1008	VESTIBULE
1009	SEX OFFENDER FILES
1011	PUBLIC SERVICE WINDOW
1012	RAMP
1013	TOILET
1014	HOLD. JUV.
1015	COFFEE
1016	SECURITY DESK
1017	RAMP
1018	WAITING (5)
1019	SEX OFFENDER REG.
1021	SEX OFFENDER REG.
1022	PHOTO/FINGERPRINT
1101	VESTIBULE
1102	COMMUNICATIONS CENTER
1103	AUX CALL TAKER
1104	MANAGER
1105	ADMINISTRATOR
1106	ADMIN. ASST.
1107	TRAINING CONSOLES
1108	TRAINING COORDINATOR
1109	CORRIDOR
1111	CORRIDOR
1112	BREAK
1113	CORRIDOR
1114	CONFERENCE (9)
1115	IT WORKROOM
1116	SERVER ROOM
1117	TOILET
1118	TOILET
1119	LOCKERS
1120	COMPRESSOR
1121	CORRIDOR
1201	VESTIBULE
1202	WORK/PROCESS DESK
1203	SINGLE HOLDING
1204	SINGLE HOLDING
1205	SECURE VESTIBULE
1206	INTERROGATION (3)
1207	TOILET
1208	SOUND VEST.
1301	RECORDS COUNTER
1302	DELIVERY STOR.
1303	RECORDS CLERKS
1304	COPY/WORK/COFFEE
1305	SUPERVISOR
1306	CORRIDOR
1307	CENTRAL MAIL / OFFICER COUNTER
1308	ELEC. CLOSET
1309	IT/DATA CLOSET
1311	STAFF TOILET
1312	TRASH
1313	HONOR GUARD
1314	PATROL LOCKERS
1315	CORRIDOR
1316	ICE/WATER/UTILITY
1317	ELEVATOR DROP
1318	STAFF VEST.
1319	K-9 OFFICE
1320	CORRIDOR
1401	EVID. WORK / LOCKERS
1402	MAJOR CASE / EVID. WORK
1403	STAFF SERVICE WINDOW
1404	EVIDENCE / PROPERTY WORK
1405	EVID. VIEWING / ATTORNEY
1406	TOILET
1407	SUPERVISOR
1408	COFFEE
1409	EV. PROP. FILES
1411	PROPERTY / STORAGE
1412	STORAGE
1413	WALK-IN COOLER
1414	EVID. PROCESSING
1415	WEAPONS STORAGE
1416	DRUG STORAGE
1417	SHORT TERM & JUVENILE PROP. STOR.
1418	SUPPLY
1419	SEXUAL ASSUALT PROP. STOR.
1421	LARGE ITEM STORAGE
1422	TUBE STOR.
1423	LONG TERM PROP. STOR.
1424	JAN.
1425	CORRIDOR
1426	LARGE PROP
1427	VEST. / AFTERHOURS DROP
1428	EVIDENCE TRANSFER
1429	DESTRUCTION
1431	VEHICULAR PROCESSING
1432	CLEAN DRESS
1433	PRIMARY LAB
1434	POWDER PROCESSING
1435	ALTERNATE LIGHT
1436	PES INVESTIGATORS
1437	SERGEANT
1438	COMPARISON LAB
1439	PES STORAGE
1441	TOILET
1442	DRYING CABINETS
1443	CORRIDOR
1501	VESTIBULE
1502	K-9 STORAGE
1503	TOILET
1504	CENTRAL JAN.
1505	CORRIDOR
1506	MECHANICAL
1508	VEHICLE MAINT. BAY
1509	FLEET STOR./WORK
1511	FLEET OFFICE
1512	EMERGENCY POWER
1513	NORMAL POWER
1514	COMPRESSOR
1515	CLEANING BAY
1516	SWAT VEHICLE
1517	VESTIBULE
1518	SWAT STORAGE / LOCKERS / EQUIP.
1519	WEAPON CLEANING
1521	ARMORY
1522	SPRINKLER
1601	BIKE PATROL
1602	COMPRESSOR
1603	PATROL/TRAFFIC STOR.
1604	GOLF CARTS
1605	MOTORCYCLE
1606	TRAILERS
1607	DRY VALVE/COMPRESSOR
1609	VEST.
EL -01	ELEVATOR
EL -02	STAFF ELEVATOR
ST-01	LOBBY STAIR
ST-02	STAFF STAIR
ST-03	EXIT STAIR

GENERAL NOTES:

1. REF. SHEET A201 FOR EXTERIOR DIMENSIONS, PLAN DETAILS, BUILDING & WALL SECTION CALLOUTS.
2. REF. SHEET A212 FOR INTERIOR DIMENSIONS & PARTITION TAGS.
3. REF. SHEET A312 FOR REFLECTED CEILING PLAN.
4. REF. SHEET A701 FOR INTERIOR PARTITION TYPES.
5. REF. SHEET A711 FOR EQUIPMENT SCHEDULE.
6. REF. SHEET A801 FOR FINISH SCHEDULE, NOTES & LEGEND.
7. REF. SHEET A811 FOR FINISH PLAN.

1 LEVEL 1 - FLOOR PLAN (EAST) - EQUIPMENT, INTERIOR ELEVATIONS, DOOR TAGS

SCALE: 1/8" = 1'-0"

NORTH

Architect: Brinkley Sargent Wigginton Architects (972) 960-9970
Landscape: Kendall Landscape Architecture (214) 739-3226
Structural: L.A. Fuess Partners, Inc (214) 593-1118
MEP: M-E Engineers (214) 741-1589
Civil: KSA Engineers, Inc (903) 236-7700
Technology: M-E Engineers (303) 421-6656

BRINKLEY SARGENT WIGINTON ARCHITECTS

LONGVIEW POLICE DEPARTMENT

518 W. SOUTH ST. LONGVIEW, TEXAS 75601

HISTORY		
#	DATE	DESCRIPTION

LICENSED ARCHITECT 9941 STATE OF TEXAS
08/19/2020

LEVEL 1 - FLOOR PLAN (EAST) - EQUIPMENT, INTERIOR ELEVATIONS, DOOR TAGS

21719
08/19/2020

A214

BID ISSUE

8/19/2020 1:09:59 PM

D:\Revit Locals\LPD_CENTRAL_A19_Scanner_08-18-2020.rvt

© 2020 Brinkley Sargent Wigginton Architects, Inc.

ROOM SCHEDULE - LVL 2

NUMBER	ROOM NAME
2001	2ND FLOOR LOBBY
2002	VESTIBULE
2003	CATERING/SERVING
2004	TRAINING / COMMUNITY ROOM
2005	STORAGE
2006	A/V
2007	FOUNTAIN
2008	MEN'S
2009	WOMEN'S
2010	COFFEE
2011	CORRIDOR
2012	OFFICERS
2013	WORK/COPY
2014	FILES/STOR.
2015	CORRIDOR

ROOM SCHEDULE - LVL 2

NUMBER	ROOM NAME
2016	INTERVIEW
2017	CONFERENCE (4)
2018	SERGEANT
2019	TRAINING SGT
2021	VESTIBULE
2022	TRAINING/SIMULATOR
2023	SIMULATOR
2101	RECORDS ARCHIVES
2102	RECEPTION
2103	ADMIN. ASSIST.
2104	CORRIDOR
2105	LIEUTENANTS
2106	LIEUTENANTS
2107	LIEUTENANTS
2108	CONFERENCE
2109	CORRIDOR

ROOM SCHEDULE - LVL 2

NUMBER	ROOM NAME
2111	JANITOR
2112	SERGEANT (4)
2113	BRIEFING
2114	CORRIDOR
2115	PLANNING RESEARCH
2116	PLANNING / RESEARCH SERGEANT
2117	REPORT WRITING
2118	SPECIAL OPERATIONS LT.
2119	ELEVATOR DROP
2120	CORRIDOR
2121	CORRIDOR
2122	VIDEO DOWNLOAD STATION
2123	MAIL/SUPPLY/FORMS
2124	ELEC. CLOSET
2125	IT/DATA CLOSET
2126	SRO/SI/PRI SERGEANTS

ROOM SCHEDULE - LVL 2

NUMBER	ROOM NAME
2127	COMM. SERVICES / PAR STORAGE
2128	GENERAL STORAGE
2129	QUARTERMASTER
2131	QUARTERMASTER STOR.
2132	DRESSING ROOM
2133	CORRIDOR
2134	CORRIDOR
2135	TRAFFIC UNIT
2136	TRAFFIC SERGEANT
2137	STORAGE
2138	BREAKROOM/VENDING
2139	JUVENILE CONF. (4)
2141	SERGEANT (4)
2142	SERGEANT (4)
2143	EQUIP. DISTRIBUTION/STOR.
2144	SPECIAL INVESTIGATIONS

ROOM SCHEDULE - LVL 2

NUMBER	ROOM NAME
2145	SERGEANT (2)
2201	SOUND VEST.
2202	SUPPLY
2203	QUIET RM
2204	LACTATION/QUIET RM
2205	DRY/CLEAN
2206	CORR.
2207	MEN'S
2208	VESTIBULE
2209	WOMEN'S
2211	ACCESSIBLE SHOWER
2212	LOCKER CIRC.
2213	LOCKER ROOM
2214	LOCKER CIRC.
2215	EXERCISE
2216	FOUNTAIN

ROOM SCHEDULE - LVL 2

NUMBER	ROOM NAME
2217	DRESSING
2218	DRESSING
2219	DRESSING
2221	DRESSING
2222	ACCESSIBLE DRESSING
2223	DRESSING
2224	TOILET/SHOWER
2225	UTILITY ROOM
2226	SHOWER
2227	SHOWER
2228	ACCESSIBLE SHOWER
2229	ACCESSIBLE SHOWER
2231	VESTIBULE
4001	PENTHOUSE
4002	ELEV. EQUIP.
EL-01	ELEVATOR

ROOM SCHEDULE - LVL 2

NUMBER	ROOM NAME
EL-02	STAFF ELEVATOR
ST-01	LOBBY STAIR
ST-02	STAFF STAIR
ST-03	EXIT STAIR

LEGEND

- STUD WALL (NOT TO DECK)
- CMU WALL (NOT TO DECK)
- WALL (TO DECK)
- 1-HOUR RATED WALL
- 2-HOUR RATED WALL
- SECURE PERIMETER A (TO DECK)
- SECURE PERIMETER B (TO DECK)
- SECURE PERIMETER B (NOT TO DECK)

SHEET NOTES:

1. STUD WALL DIMENSIONS ARE FACE OF STUD UNLESS NOTED OTHERWISE
2. CMU WALL DIMENSIONS ARE FACE OF CMU UNLESS NOTED OTHERWISE
3. PER SPECIFICATION 09 29 00 GYPSUM BOARD, USE TILE BACKER BOARD IN LIEU OF GYP AT LOCATIONS WHERE TILE IS CALLED OUT AS A WALL FINISH, REFERENCE FINISH SCHEDULE, FINISH PLAN, & INTERIOR ELEVATIONS
4. GRIND RADIUS PROFILE AT ALL CMU OUTSIDE CORNERS
5. REFERENCE **1/A701** FOR PARTITION TYPES
6. REFERENCE ENLARGED PLANS FOR ADDITIONAL DIMENSIONS, TAGS AND NOTES
7. CEILINGS AT 9' - 0" ABOVE FINISH FLOOR U.N.O.

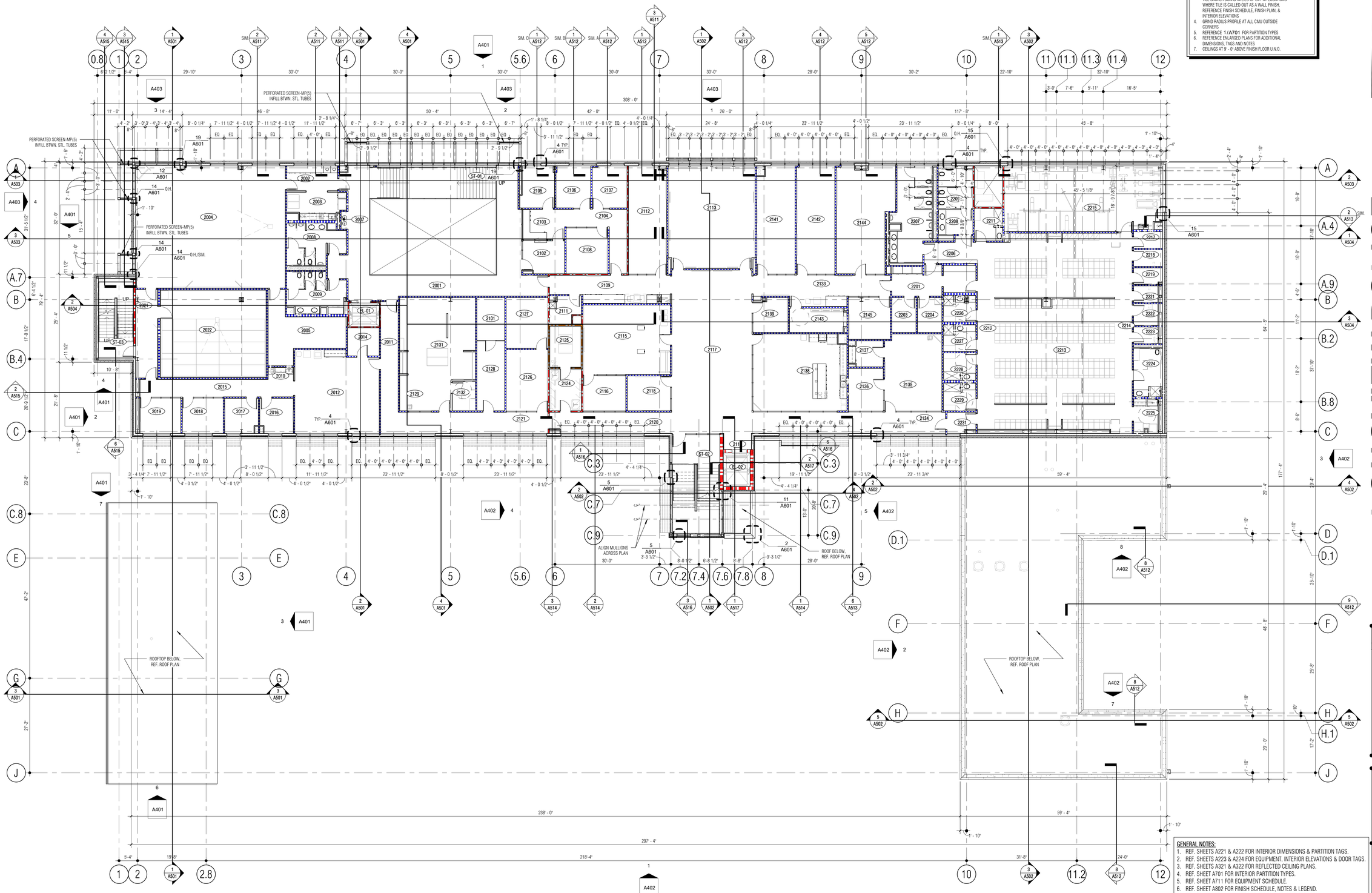

GENERAL NOTES:

1. REF. SHEETS A221 & A222 FOR INTERIOR DIMENSIONS & PARTITION TAGS.
2. REF. SHEETS A223 & A224 FOR EQUIPMENT, INTERIOR ELEVATIONS & DOOR TAGS.
3. REF. SHEETS A321 & A322 FOR REFLECTED CEILING PLANS.
4. REF. SHEET A701 FOR INTERIOR PARTITION TYPES.
5. REF. SHEET A711 FOR EQUIPMENT SCHEDULE.
6. REF. SHEET A802 FOR FINISH SCHEDULE, NOTES & LEGEND.
7. REF. SHEET A821 FOR FINISH PLAN.

NORTH

1 LEVEL 2 - REFERENCE PLAN

SCALE: 3/32" = 1'-0"

0' 5'-4" 10'8"

Architect: Brinkley Sargent Wigginton Architects (972) 960-9970
Landscape: Kendall Landscape Architecture (214) 739-3226
Structural: L.A. Fuess Partners, Inc (214) 593-1118
MEP: M-E Engineers (214) 741-1589
Civil: KSA Engineers, Inc (903) 236-7700
Technology: M-E Engineers (303) 421-6656

BRINKLEY SARGENT WIGGINTON ARCHITECTS

LONGVIEW POLICE DEPARTMENT

518 W. SOUTH ST. LONGVIEW, TEXAS 75601

HISTORY		
#	DATE	DESCRIPTION

REGISTERED ARCHITECT 3941 STATE OF TEXAS
08/19/2020

LEVEL 2 - REFERENCE PLAN

BID ISSUE

21719
08/19/2020

A220

8/19/2020 1:11:12 PM

D:\Revit Locals\LPD_CENTRAL_A19_Jacobsen_08-19-2020.rvt

© 2020 Brinkley Sargent Wigginton Architects, Inc.

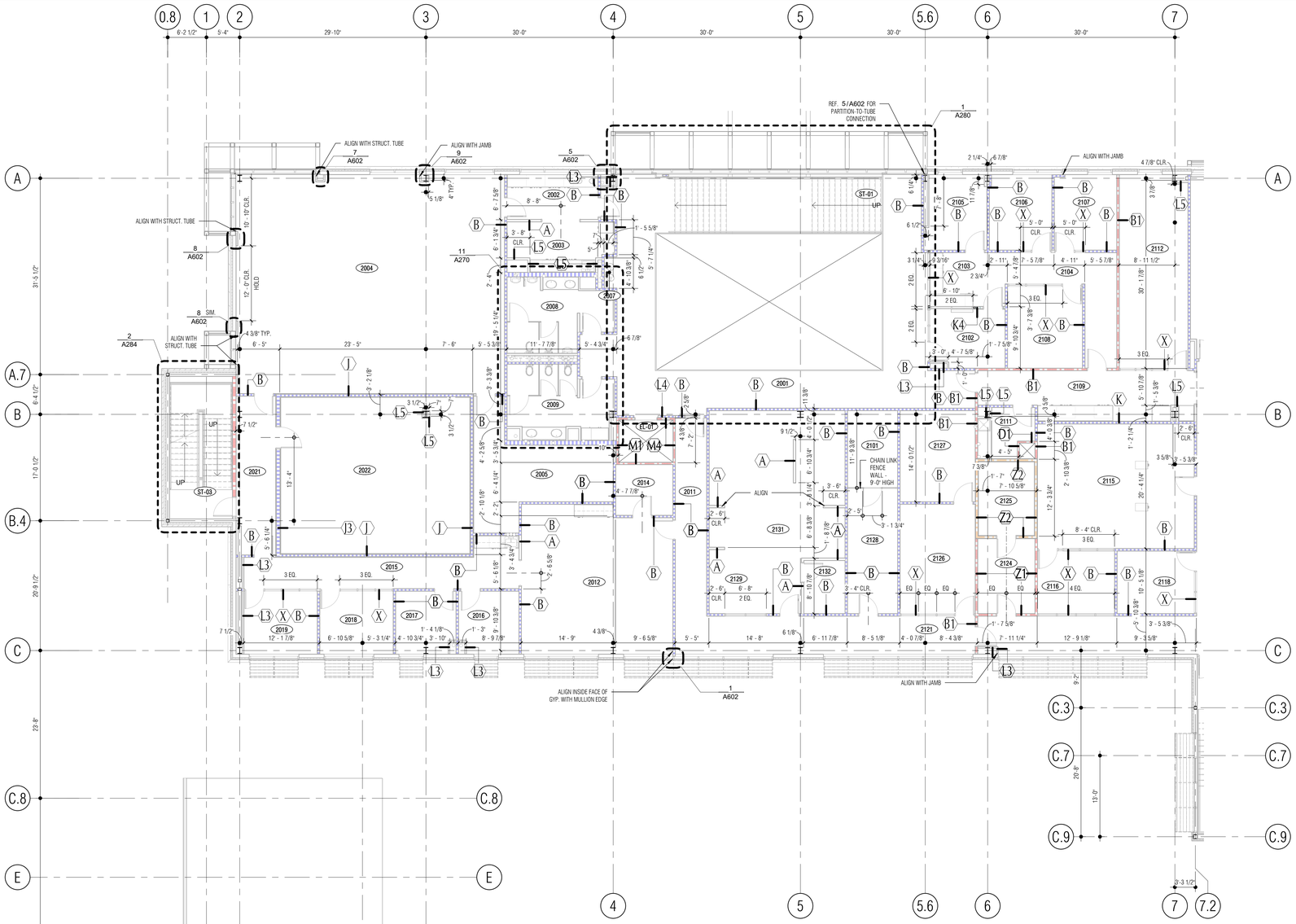

LEGEND

- STUD WALL (NOT TO DECK)
- CMU WALL (NOT TO DECK)
- WALL (TO-DECK)
- 1-HOUR RATED WALL
- 2-HOUR RATED WALL
- SECURE PERIMETER A (TO DECK)
- SECURE PERIMETER B (TO DECK)
- SECURE PERIMETER B (NOT TO DECK)

SHEET NOTES:

1. STUD WALL DIMENSIONS ARE FACE OF STUD UNLESS NOTED OTHERWISE
2. CMU WALL DIMENSIONS ARE FACE OF CMU UNLESS NOTED OTHERWISE
3. PER SPECIFICATION 09 29 00 GYPSUM BOARD, USE TILE BACKER BOARD IN LIEU OF GYP AT LOCATIONS WHERE TILE IS CALLED OUT AS A WALL FINISH. REFERENCE FINISH SCHEDULE, FINISH PLAN, & INTERIOR ELEVATIONS
4. GRIND RADIUS PROFILE AT ALL CMU OUTSIDE CORNERS
5. REFERENCE **1/A701** FOR PARTITION TYPES
6. REFERENCE ENLARGED PLANS FOR ADDITIONAL DIMENSIONS, TAGS AND NOTES
7. CEILINGS AT 9' - 0" ABOVE FINISH FLOOR U.N.O.

ROOM SCHEDULE - LEVEL 2

NUMBER	ROOM NAME
2001	2ND FLOOR LOBBY
2002	VESTIBULE
2003	CATERING/SERVING
2004	TRAINING / COMMUNITY ROOM
2005	STORAGE
2006	A/V
2007	FOUNTAIN
2008	MEN'S
2009	WOMEN'S
2010	COFFEE
2011	CORRIDOR
2012	OFFICERS
2013	WORK/COPY
2014	FILES/STOR.
2015	CORRIDOR
2016	INTERVIEW
2017	CONFERENCE (4)
2018	SERGEANT
2019	TRAINING SGT
2021	VESTIBULE
2022	TRAINING/SIMULATOR
2023	SIMULATOR
2101	RECORDS ARCHIVES
2102	RECEPTION
2103	ADMIN. ASSIST.
2104	CORRIDOR
2105	LIEUTENANTS
2106	LIEUTENANTS
2107	LIEUTENANTS
2108	CONFERENCE
2109	CORRIDOR
2111	JANITOR
2112	SERGEANT (4)
2113	BRIEFING
2114	CORRIDOR
2115	PLANNING RESEARCH
2116	PLANNING / RESEARCH SERGEANT
2117	REPORT WRITING
2118	SPECIAL OPERATIONS LT.
2119	ELEVATOR DROP
2120	CORRIDOR
2121	CORRIDOR
2122	VIDEO DOWNLOAD STATION
2123	MAIL/SUPPLY/FORMS
2124	ELEC. CLOSET
2125	IT/DATA CLOSET
2126	SRO/SI/PRI SERGEANTS
2127	COMM. SERVICES / PAR STORAGE
2128	GENERAL STORAGE
2129	QUARTERMASTER
2131	QUARTERMASTER STOR.
2132	DRESSING ROOM
2133	CORRIDOR
2134	CORRIDOR
2135	TRAFFIC UNIT
2136	TRAFFIC SERGEANT
2137	STORAGE
2138	BREAKROOM/VENDING
2139	JUVENILE CONF. (4)
2141	SERGEANT (4)
2142	SERGEANT (4)
2143	EQUIP. DISTRIBUTION/STOR.
2144	SPECIAL INVESTIGATIONS
2145	SERGEANT (2)
2201	SOUND VEST.
2202	SUPPLY
2203	QUIET RM
2204	LACTATION/QUIET RM
2205	DRYCLEAN
2206	CORR.
2207	MEN'S
2208	VESTIBULE
2209	WOMEN'S
2211	ACCESSIBLE SHOWER
2212	LOCKER CIRC.
2213	LOCKER ROOM
2214	LOCKER CIRC.
2215	EXERCISE
2216	FOUNTAIN
2217	DRESSING
2218	DRESSING
2219	DRESSING
2221	DRESSING
2222	ACCESSIBLE DRESSING
2223	DRESSING
2224	TOILET/SHOWER
2225	UTILITY ROOM
2226	SHOWER
2227	SHOWER
2228	ACCESSIBLE SHOWER
2229	ACCESSIBLE SHOWER
2231	VESTIBULE
EL-01	ELEVATOR
EL-02	STAFF ELEVATOR
ST-01	LOBBY STAIR
ST-02	STAFF STAIR
ST-03	EXIT STAIR

Architect: Brinkley Sargent Wigginton Architects (972) 960-9970
Landscape: Kendall Landscape Architecture (214) 739-3226
Structural: L.A. Fuess Partners, Inc (214) 593-1118
MEP: M-E Engineers (214) 741-1589
Civil: KSA Engineers, Inc (903) 236-7700
Technology: M+E Engineers (303) 421-6656

BRINKLEY SARGENT WIGGINTON ARCHITECTS

LONGVIEW POLICE DEPARTMENT

518 W. SOUTH ST. LONGVIEW, TEXAS 75601

HISTORY

#	DATE	DESCRIPTION

REGISTERED ARCHITECT 9941 STATE OF TEXAS
08/19/2020

LEVEL 2 - FLOOR PLAN (WEST) - WALL TAGS, DIMENSIONS

BID ISSUE

21719
08/19/2020
A221

GENERAL NOTES:

1. REF. SHEET A202 FOR EXTERIOR DIMENSIONS, PLAN DETAILS, BUILDING & WALL SECTION CALLOUTS.
2. REF. SHEET A223 FOR EQUIPMENT, INTERIOR ELEVATIONS & DOOR TAGS.
3. REF. SHEET A321 FOR REFLECTED CEILING PLAN.
4. REF. SHEET A701 FOR INTERIOR PARTITION TYPES.
5. REF. SHEET A711 FOR EQUIPMENT SCHEDULE.
6. REF. SHEET A802 FOR FINISH SCHEDULE, NOTES & LEGEND.
7. REF. SHEET A821 FOR FINISH PLAN.

1 LEVEL 2 - FLOOR PLAN (WEST) - WALL TAGS, DIMENSIONS

SCALE: 1/8" = 1'-0"

NORTH

0' 4'0" 8'0"

8/19/2020 1:12:03 PM

E:\Revit Locals\LPD_CENTRAL_A19_Jacobsenar_08-19-2020.rvt

© 2020 Brinkley Sargent Wigginton Architects, Inc.

LEGEND

- STUD WALL (NOT TO DECK)
- CMU WALL (NOT TO DECK)
- WALL (TO DECK)
- 1-HOUR RATED WALL
- 2-HOUR RATED WALL
- SECURE PERIMETER A (TO DECK)
- SECURE PERIMETER B (TO DECK)
- SECURE PERIMETER B (NOT TO DECK)

SHEET NOTES:

1. STUD WALL DIMENSIONS ARE FACE OF STUD UNLESS NOTED OTHERWISE
2. CMU WALL DIMENSIONS ARE FACE OF CMU UNLESS NOTED OTHERWISE
3. PER SPECIFICATION 09 29 00 GYPSUM BOARD, USE TILE BACKER BOARD IN LIEU OF GYP AT LOCATIONS WHERE TILE IS CALLED OUT AS A WALL FINISH. REFERENCE FINISH SCHEDULE, FINISH PLAN, & INTERIOR ELEVATIONS
4. GRIND RADIUS PROFILE AT ALL CMU OUTSIDE CORNERS
5. REFERENCE **1/A701** FOR PARTITION TYPES
6. REFERENCE ENLARGED PLANS FOR ADDITIONAL DIMENSIONS, TAGS AND NOTES
7. CEILINGS AT 9' - 0" ABOVE FINISH FLOOR U.N.O.

ROOM SCHEDULE - LEVEL 2

NUMBER	ROOM NAME
2001	2ND FLOOR LOBBY
2002	VESTIBULE
2003	CATERING/SERVING
2004	TRAINING / COMMUNITY ROOM
2005	STORAGE
2006	A-V
2007	FOUNTAIN
2008	MEN'S
2009	WOMEN'S
2010	COFFEE
2011	CORRIDOR
2012	OFFICERS
2013	WORK/COPY
2014	FILES/STOR.
2015	CORRIDOR
2016	INTERVIEW
2017	CONFERENCE (4)
2018	SERGEANT
2019	TRAINING SGT
2021	VESTIBULE
2022	TRAINING/SIMULATOR
2023	SIMULATOR
2101	RECORDS ARCHIVES
2102	RECEPTION
2103	ADMIN. ASSIST.
2104	CORRIDOR
2105	LIEUTENANTS
2106	LIEUTENANTS
2107	LIEUTENANTS
2108	CONFERENCE
2109	CORRIDOR
2111	JANITOR
2112	SERGEANT (4)
2113	BRIEFING
2114	CORRIDOR
2115	PLANNING RESEARCH
2116	PLANNING / RESEARCH SERGEANT
2117	REPORT WRITING
2118	SPECIAL OPERATIONS LT.
2119	ELEVATOR DROP
2120	CORRIDOR
2121	CORRIDOR
2122	VIDEO DOWNLOAD STATION
2123	MAIL/SUPPLY/FORMS
2124	ELEC. CLOSET
2125	IT/DATA CLOSET
2126	SRO/SI/PRI SERGEANTS
2127	COMM. SERVICES / PAR STORAGE
2128	GENERAL STORAGE
2129	QUARTERMASTER
2131	QUARTERMASTER STOR.
2132	DRESSING ROOM
2133	CORRIDOR
2134	CORRIDOR
2135	TRAFFIC UNIT
2136	TRAFFIC SERGEANT
2137	STORAGE
2138	BREAKROOM/VENDING
2139	JUVENILE CONF. (4)
2141	SERGEANT (4)
2142	SERGEANT (4)
2143	EQUIP. DISTRIBUTION/STOR.
2144	SPECIAL INVESTIGATIONS
2145	SERGEANT (2)
2201	SOUND VEST.
2202	SUPPLY
2203	QUIET RM
2204	LACTATION/QUIET RM
2205	DRYCLEAN
2206	CORR.
2207	MEN'S
2208	VESTIBULE
2209	WOMEN'S
2211	ACCESSIBLE SHOWER
2212	LOCKER CIRC.
2213	LOCKER ROOM
2214	LOCKER CIRC.
2215	EXERCISE
2216	FOUNTAIN
2217	DRESSING
2218	DRESSING
2219	DRESSING
2221	DRESSING
2222	ACCESSIBLE DRESSING
2223	DRESSING
2224	TOILET/SHOWER
2225	UTILITY ROOM
2226	SHOWER
2227	SHOWER
2228	ACCESSIBLE SHOWER
2229	ACCESSIBLE SHOWER
2231	VESTIBULE
EL-01	ELEVATOR
EL-02	STAFF ELEVATOR
ST-01	LOBBY STAIR
ST-02	STAFF STAIR
ST-03	EXIT STAIR

Architect: Brinkley Sargent Wigginton Architects (972) 960-9970
Landscape: Kendall Landscape Architecture (214) 739-3226
Structural: L.A. Fuess Partners, Inc (214) 593-1118
MEP: M-E Engineers (214) 741-1589
Civil: KSA Engineers, Inc (903) 236-7700
Technology: M-E Engineers (303) 421-6656

BRINKLEY SARGENT WIGINTON ARCHITECTS

LONGVIEW POLICE DEPARTMENT

518 W. SOUTH ST. LONGVIEW, TEXAS 75601

HISTORY		
#	DATE	DESCRIPTION

LEVEL 2 - FLOOR PLAN (EAST) - WALL TAGS, DIMENSIONS

BID ISSUE

21719
08/19/2020
A222

GENERAL NOTES:

1. REF. SHEET A202 FOR EXTERIOR DIMENSIONS, PLAN DETAILS, BUILDING & WALL SECTION CALLOUTS.
2. REF. SHEET A224 FOR EQUIPMENT, INTERIOR ELEVATIONS & DOOR TAGS.
3. REF. SHEET A322 FOR REFLECTED CEILING PLAN.
4. REF. SHEET A701 FOR INTERIOR PARTITION TYPES.
5. REF. SHEET A711 FOR EQUIPMENT SCHEDULE.
6. REF. SHEET A802 FOR FINISH SCHEDULE, NOTES & LEGEND.
7. REF. SHEET A821 FOR FINISH PLAN.

1 LEVEL 2 - FLOOR PLAN (EAST) - WALL TAGS, DIMENSIONS

SCALE: 1/8" = 1'-0"

NORTH

8/19/2020 1:12:52 PM

E:\Revit Locals\LPD_CENTRAL_A19_Jacobsen_08-19-2020.rvt

© 2020 Brinkley Sargent Wigginton Architects, Inc.

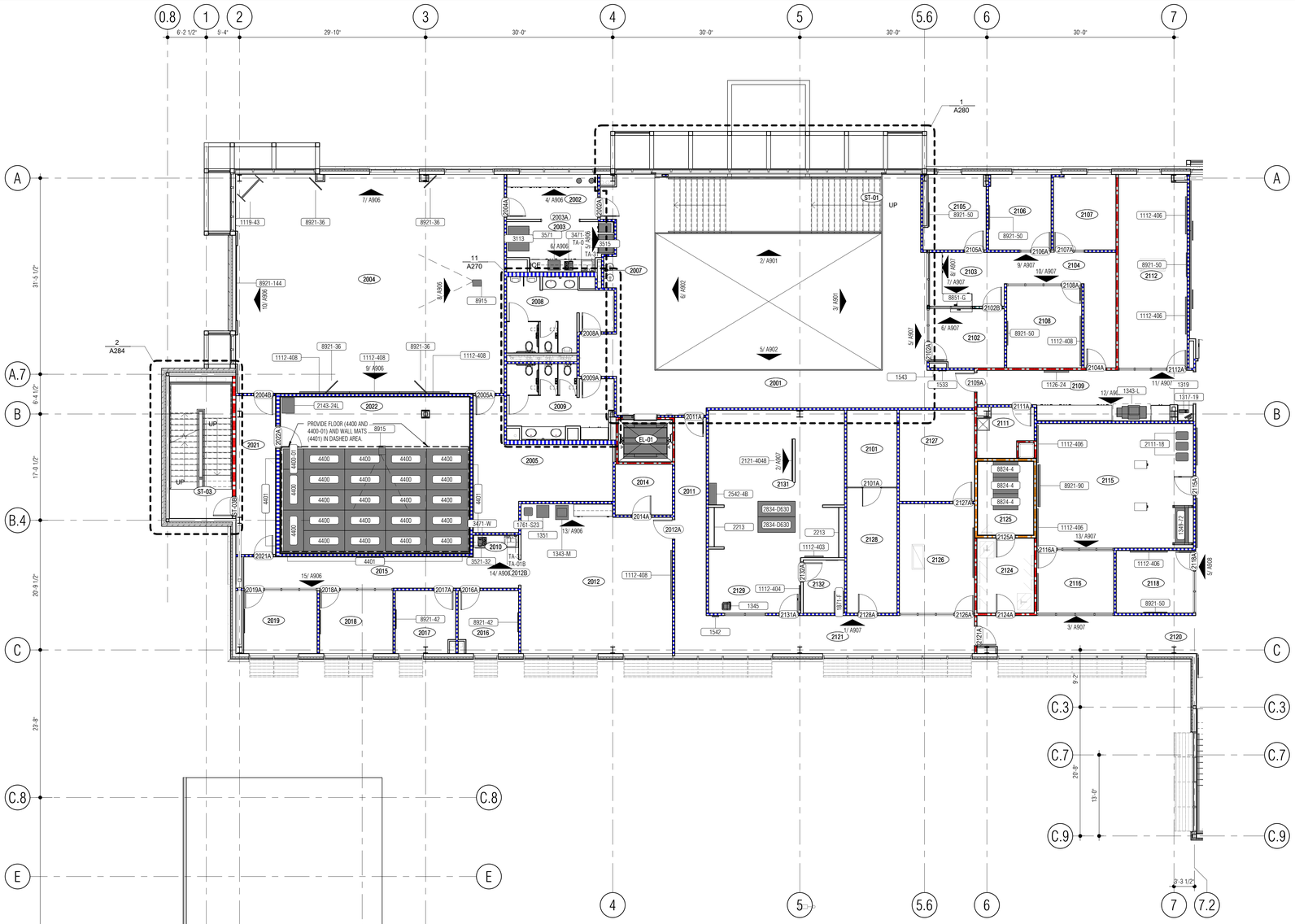

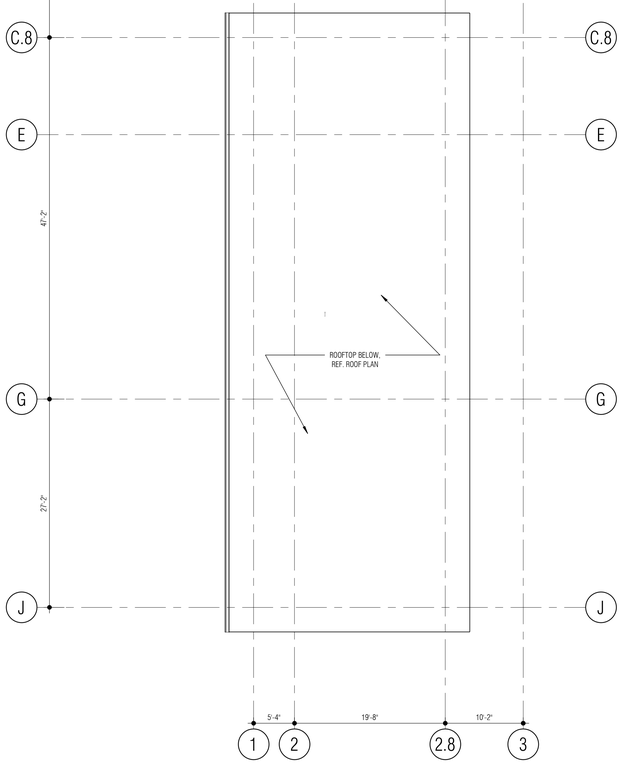

LEGEND

- STUD WALL (NOT TO DECK)
- CMU WALL (NOT TO DECK)
- WALL (TO-DECK)
- 1-HOUR RATED WALL
- 2-HOUR RATED WALL
- SECURE PERIMETER A (TO DECK)
- SECURE PERIMETER B (TO DECK)
- SECURE PERIMETER B (NOT TO DECK)

SHEET NOTES:

1. STUD WALL DIMENSIONS ARE FACE OF STUD UNLESS NOTED OTHERWISE
2. CMU WALL DIMENSIONS ARE FACE OF CMU UNLESS NOTED OTHERWISE
3. PER SPECIFICATION 09 29 00 GYPSUM BOARD, USE TILE BACKER BOARD IN LIEU OF GYP AT LOCATIONS WHERE TILE IS CALLED OUT AS A WALL FINISH. REFERENCE FINISH SCHEDULE, FINISH PLAN, & INTERIOR ELEVATIONS
4. GRIND RADIUS PROFILE AT ALL CMU OUTSIDE CORNERS
5. REFERENCE **1 / A701** FOR PARTITION TYPES
6. REFERENCE ENLARGED PLANS FOR ADDITIONAL DIMENSIONS, TAGS AND NOTES
7. CEILINGS AT 9' - 0" ABOVE FINISH FLOOR U.N.O.

ROOM SCHEDULE - LEVEL 2

NUMBER	ROOM NAME
2001	2ND FLOOR LOBBY
2002	VESTIBULE
2003	CATERING/SERVING
2004	TRAINING / COMMUNITY ROOM
2005	STORAGE
2006	A/V
2007	FOUNTAIN
2008	MEN'S
2009	WOMEN'S
2010	COFFEE
2011	CORRIDOR
2012	OFFICERS
2013	WORK/COPY
2014	FILES/STOR.
2015	CORRIDOR
2016	INTERVIEW
2017	CONFERENCE (4)
2018	SERGEANT
2019	TRAINING SGT
2021	VESTIBULE
2022	TRAINING/SIMULATOR
2023	SIMULATOR
2101	RECORDS ARCHIVES
2102	RECEPTION
2103	ADMIN. ASSIST.
2104	CORRIDOR
2105	LIEUTENANTS
2106	LIEUTENANTS
2107	LIEUTENANTS
2108	CONFERENCE
2109	CORRIDOR
2111	JANITOR
2112	SERGEANT (4)
2113	BRIEFING
2114	CORRIDOR
2115	PLANNING RESEARCH
2116	PLANNING / RESEARCH SERGEANT
2117	REPORT WRITING
2118	SPECIAL OPERATIONS LT.
2119	ELEVATOR DROP
2120	CORRIDOR
2121	CORRIDOR
2122	VIDEO DOWNLOAD STATION
2123	MAIL/SUPPLY/FORMS
2124	ELEC. CLOSET
2125	IT/DATA CLOSET
2126	SRO/SI/PRI SERGEANTS
2127	COMM. SERVICES / PAR STORAGE
2128	GENERAL STORAGE
2129	QUARTERMASTER
2131	QUARTERMASTER STOR.
2132	DRESSING ROOM
2133	CORRIDOR
2134	CORRIDOR
2135	TRAFFIC UNIT
2136	TRAFFIC SERGEANT
2137	STORAGE
2138	BREAKROOM/VENDING
2139	JUVENILE CONF. (4)
2141	SERGEANT (4)
2142	SERGEANT (4)
2143	EQUIP. DISTRIBUTION/STOR.
2144	SPECIAL INVESTIGATIONS
2145	SERGEANT (2)
2201	SOUND VEST.
2202	SUPPLY
2203	QUIET RM
2204	LACTATION/QUIET RM
2205	DRYCLEAN
2206	CORR.
2207	MEN'S
2208	VESTIBULE
2209	WOMEN'S
2211	ACCESSIBLE SHOWER
2212	LOCKER CIRC.
2213	LOCKER ROOM
2214	LOCKER CIRC.
2215	EXERCISE
2216	FOUNTAIN
2217	DRESSING
2218	DRESSING
2219	DRESSING
2221	DRESSING
2222	ACCESSIBLE DRESSING
2223	DRESSING
2224	TOILET/SHOWER
2225	UTILITY ROOM
2226	SHOWER
2227	SHOWER
2228	ACCESSIBLE SHOWER
2229	ACCESSIBLE SHOWER
2231	VESTIBULE
EL-01	ELEVATOR
EL-02	STAFF ELEVATOR
ST-01	LOBBY STAIR
ST-02	STAFF STAIR
ST-03	EXIT STAIR

Architect: Brinkley Sargent Wigginton Architects (972) 960-9970
Landscape: Kendall Landscape Architecture (214) 739-3226
Structural: L.A. Fuess Partners, Inc (214) 593-1118
MEP: M-E Engineers (214) 741-1589
Civil: KSA Engineers, Inc (903) 236-7700
Technology: M-E Engineers (303) 421-6656

BRINKLEY SARGENT WIGINTON ARCHITECTS

LONGVIEW POLICE DEPARTMENT

518 W. SOUTH ST. LONGVIEW, TEXAS 75601

HISTORY

#	DATE	DESCRIPTION

LEVEL 2 - FLOOR PLAN (WEST) - EQUIPMENT, INTERIOR ELEVATIONS, DOOR TAGS

BID ISSUE

21719

08/19/2020

A223

GENERAL NOTES:

1. REF. SHEET A202 FOR EXTERIOR DIMENSIONS, PLAN DETAILS, BUILDING & WALL SECTION CALLOUTS.
2. REF. SHEET A221 FOR INTERIOR DIMENSIONS & PARTITION TAGS.
3. REF. SHEET A321 FOR REFLECTED CEILING PLAN.
4. REF. SHEET A701 FOR INTERIOR PARTITION TYPES.
5. REF. SHEET A711 FOR EQUIPMENT SCHEDULE.
6. REF. SHEET A802 FOR FINISH SCHEDULE, NOTES & LEGEND.
7. REF. SHEET A821 FOR FINISH PLAN.

1 LEVEL 2 - FLOOR PLAN (WEST) - EQUIPMENT, INTERIOR ELEVATIONS, DOOR TAGS

SCALE: 1/8" = 1'-0"

NORTH

0' 4'0" 8'0"

8/19/2020 1:13:44 PM

E:\Revit Locals\LPD_CENTRAL_A19_Jacobsen_08-19-2020.rvt

© 2020 Brinkley Sargent Wigginton Architects, Inc.

LEGEND

- STUD WALL (NOT TO DECK)
- CMU WALL (NOT TO DECK)
- WALL (TO DECK)
- 1-HOUR RATED WALL
- 2-HOUR RATED WALL
- SECURE PERIMETER A (TO DECK)
- SECURE PERIMETER B (TO DECK)
- SECURE PERIMETER B (NOT TO DECK)

SHEET NOTES:

1. STUD WALL DIMENSIONS ARE FACE OF STUD UNLESS NOTED OTHERWISE
2. CMU WALL DIMENSIONS ARE FACE OF CMU UNLESS NOTED OTHERWISE
3. PER SPECIFICATION 09 29 00 GYPSUM BOARD, USE TILE BACKER BOARD IN LIEU OF GYP AT LOCATIONS WHERE TILE IS CALLED OUT AS A WALL FINISH. REFERENCE FINISH SCHEDULE, FINISH PLAN, & INTERIOR ELEVATIONS
4. GRIND RADIUS PROFILE AT ALL CMU OUTSIDE CORNERS
5. REFERENCE **1/A701** FOR PARTITION TYPES
6. REFERENCE ENLARGED PLANS FOR ADDITIONAL DIMENSIONS, TAGS AND NOTES
7. CEILINGS AT 9' - 0" ABOVE FINISH FLOOR U.N.O.

ROOM SCHEDULE - LEVEL 2

NUMBER	ROOM NAME
2001	2ND FLOOR LOBBY
2002	VESTIBULE
2003	CATERING/SERVING
2004	TRAINING / COMMUNITY ROOM
2005	STORAGE
2006	A/V
2007	FOUNTAIN
2008	MEN'S
2009	WOMEN'S
2010	COFFEE
2011	CORRIDOR
2012	OFFICERS
2013	WORK/COPY
2014	FILES/STOR.
2015	CORRIDOR
2016	INTERVIEW
2017	CONFERENCE (4)
2018	SERGEANT
2019	TRAINING SGT
2021	VESTIBULE
2022	TRAINING/SIMULATOR
2023	SIMULATOR
2101	RECORDS ARCHIVES
2102	RECEPTION
2103	ADMIN. ASSIST.
2104	CORRIDOR
2105	LIEUTENANTS
2106	LIEUTENANTS
2107	LIEUTENANTS
2108	CONFERENCE
2109	CORRIDOR
2111	JANITOR
2112	SERGEANT (4)
2113	BRIEFING
2114	CORRIDOR
2115	PLANNING RESEARCH
2116	PLANNING / RESEARCH SERGEANT
2117	REPORT WRITING
2118	SPECIAL OPERATIONS LT.
2119	ELEVATOR DROP
2120	CORRIDOR
2121	CORRIDOR
2122	VIDEO DOWNLOAD STATION
2123	MAIL/SUPPLY/FORMS
2124	ELEC. CLOSET
2125	IT/DATA CLOSET
2126	SRO/SI/PRI SERGEANTS
2127	COMM. SERVICES / PAR STORAGE
2128	GENERAL STORAGE
2129	QUARTERMASTER
2131	QUARTERMASTER STOR.
2132	DRESSING ROOM
2133	CORRIDOR
2134	CORRIDOR
2135	TRAFFIC UNIT
2136	TRAFFIC SERGEANT
2137	STORAGE
2138	BREAKROOM/VENDING
2139	JUVENILE CONF. (4)
2141	SERGEANT (4)
2142	SERGEANT (4)
2143	EQUIP. DISTRIBUTION/STOR.
2144	SPECIAL INVESTIGATIONS
2145	SERGEANT (2)
2201	SOUND VEST.
2202	SUPPLY
2203	QUIET RM
2204	LACTATION/QUIET RM
2205	DRYCLEAN
2206	CORR.
2207	MEN'S
2208	VESTIBULE
2209	WOMEN'S
2211	ACCESSIBLE SHOWER
2212	LOCKER CIRC.
2213	LOCKER ROOM
2214	LOCKER CIRC.
2215	EXERCISE
2216	FOUNTAIN
2217	DRESSING
2218	DRESSING
2219	DRESSING
2221	DRESSING
2222	ACCESSIBLE DRESSING
2223	DRESSING
2224	TOILET/SHOWER
2225	UTILITY ROOM
2226	SHOWER
2227	SHOWER
2228	ACCESSIBLE SHOWER
2229	ACCESSIBLE SHOWER
2231	VESTIBULE
EL-01	ELEVATOR
EL-02	STAFF ELEVATOR
ST-01	LOBBY STAIR
ST-02	STAFF STAIR
ST-03	EXIT STAIR

Architect: Brinkley Sargent Wigginton Architects (972) 960-9970
Landscape: Kendall Landscape Architecture (214) 739-3226
Structural: L.A. Fuess Partners, Inc (214) 593-1118
MEP: M-E Engineers (214) 741-1589
Civil: KSA Engineers, Inc (903) 236-7700
Technology: M-E Engineers (303) 421-6656

BRINKLEY SARGENT WIGINTON ARCHITECTS

LONGVIEW POLICE DEPARTMENT

518 W. SOUTH ST. LONGVIEW, TEXAS 75601

HISTORY

#	DATE	DESCRIPTION

GENERAL NOTES:

1. REF. SHEET A202 FOR EXTERIOR DIMENSIONS, PLAN DETAILS, BUILDING & WALL SECTION CALLOUTS.
2. REF. SHEET A222 FOR INTERIOR DIMENSIONS & PARTITION TAGS.
3. REF. SHEET A322 FOR REFLECTED CEILING PLAN.
4. REF. SHEET A701 FOR INTERIOR PARTITION TYPES.
5. REF. SHEET A711 FOR EQUIPMENT SCHEDULE.
6. REF. SHEET A802 FOR FINISH SCHEDULE, NOTES & LEGEND.
7. REF. SHEET A821 FOR FINISH PLAN.

1 LEVEL 2 - FLOOR PLAN (EAST) - EQUIPMENT, INTERIOR ELEVATIONS, DOOR TAGS

SCALE: 1/8" = 1'-0"

NORTH

LEVEL 2 - FLOOR PLAN (EAST) - EQUIPMENT, INTERIOR ELEVATIONS, DOOR TAGS

21719

08/19/2020

A224

BID ISSUE

8/18/2020 1:14:21 PM

D:\Revit Locals\LFS_CENTRAL_A19_Beginner_08-18-2020.rvt

© 2020 Brinkley Sargent Wigginton Architects, Inc.

ROOM SCHEDULE - LVL 3	
NUMBER	ROOM NAME
3001	OVERLOOK
3002	RECEPTION / WAITING
3003	CORRIDOR
3004	COFFEE
3005	OFFICE MANAGER
3006	ADMIN. ASSIST.
3007	CORRIDOR
3008	CONFERENCE
3009	EXEC. ASSIST.
3011	CORRIDOR
3012	POLICE CHIEF
3013	ASSISTANT CHIEF
3014	WORK/COPY
3015	WOMENS
3016	PERSONNEL FILES

ROOM SCHEDULE - LVL 3	
NUMBER	ROOM NAME
3017	MENS
3018	ADMIN. SERGEANT
3019	CORRIDOR
3021	CENTRAL SUPPLY
3022	CORRIDOR
3023	ASSIST. CHIEF
3024	CAPTAIN
3025	CAPTAIN
3026	SUPPORT SERVICES LT.
3027	CAPTAIN
3028	I.A. LIEUTENANT
3029	I.A. LIEUTENANT
3031	I.A. FILES
3032	CONF. (4) / INTERVIEW
3101	CORRIDOR
3102	RECEPTION

ROOM SCHEDULE - LVL 3	
NUMBER	ROOM NAME
3103	SUSPECT WAITING
3104	INTERROGATION (3)
3105	INTERROGATION (3)
3106	TOILET
3107	P.I.O. / SOCIAL MEDIA
3108	WOMEN'S
3109	MEN'S
3111	CORRIDOR
3112	SHREDDER
3113	STORAGE
3114	CORRIDOR
3115	ELECTRICAL CLOSET
3116	IT/DATA CLOSET
3117	CORRIDOR
3118	JANITOR
3119	DETECTIVES

ROOM SCHEDULE - LVL 3	
NUMBER	ROOM NAME
3121	DETECTIVES
3122	ELEVATOR DROP
3123	CORRIDOR
3124	DETECTIVES
3125	DETECTIVES
3126	CORRIDOR
3127	DETECTIVES
3128	SERGEANT
3129	STORAGE
3130	COFFEE
3131	COPY/WORK/COFFEE
3132	EQUIPMENT ROOM
3133	EVIDENCE STORAGE
3134	CYBER LAB RECEIVING
3135	TECH. INVESTIGATORS/CYBER LAB
3136	FORENSICS I.T.

ROOM SCHEDULE - LVL 3	
NUMBER	ROOM NAME
3137	SOLDER WORKSTATION
3138	TASK FORCE OFFICERS
3139	VIDEO STATION
3141	TASK FORCE OFFICERS
3142	CORRIDOR
3143	TECH. INVESTIGATORS
3144	SERGEANT
3145	SERGEANT
3146	SERGEANT
3147	CORRIDOR
3148	DETECTIVE
3149	STRATEGY CONF.
3151	CORRIDOR
3152	CORRIDOR
3153	FOUNTAIN
3154	CORRIDOR

ROOM SCHEDULE - LVL 3	
NUMBER	ROOM NAME
3155	LIEUTENANT
3201	CORRIDOR
3202	INTERVIEW (4)
3203	INTERVIEW (4)
3204	VICTIM ASSIST
3205	ADMIN. ASSIST.
3206	SOFT INTERVIEW
3207	PUBLIC WAITING
3208	TOILET
3209	TOILET
4001	PENTHOUSE
4002	ELEV. EQUIP.
EL-01	ELEVATOR
EL-02	STAFF ELEVATOR
ST-01	LOBBY STAIR
ST-02	STAFF STAIR
ST-03	EXIT STAIR

LEGEND

- STUD WALL (NOT TO DECK)
- CMU WALL (NOT TO DECK)
- WALL (TO DECK)
- 1-HOUR RATED WALL
- 2-HOUR RATED WALL
- SECURE PERIMETER A (TO DECK)
- SECURE PERIMETER B (TO DECK)
- SECURE PERIMETER B (NOT TO DECK)

SHEET NOTES:

1. STUD WALL DIMENSIONS ARE FACE OF STUD UNLESS NOTED OTHERWISE
2. CMU WALL DIMENSIONS ARE FACE OF CMU UNLESS NOTED OTHERWISE
3. PER SPECIFICATION 09 29 00 GYPSUM BOARD, USE TILE BACKER BOARD IN LIEU OF GYP AT LOCATIONS WHERE TILE IS CALLED OUT AS A WALL FINISH, REFERENCE FINISH SCHEDULE, FINISH PLAN, & INTERIOR ELEVATIONS
4. GRIND RADIUS PROFILE AT ALL CMU OUTSIDE CORNERS
5. REFERENCE **1/A701** FOR PARTITION TYPES
6. REFERENCE ENLARGED PLANS FOR ADDITIONAL DIMENSIONS, TAGS AND NOTES
7. CEILINGS AT 9' - 0" ABOVE FINISH FLOOR U.N.O.

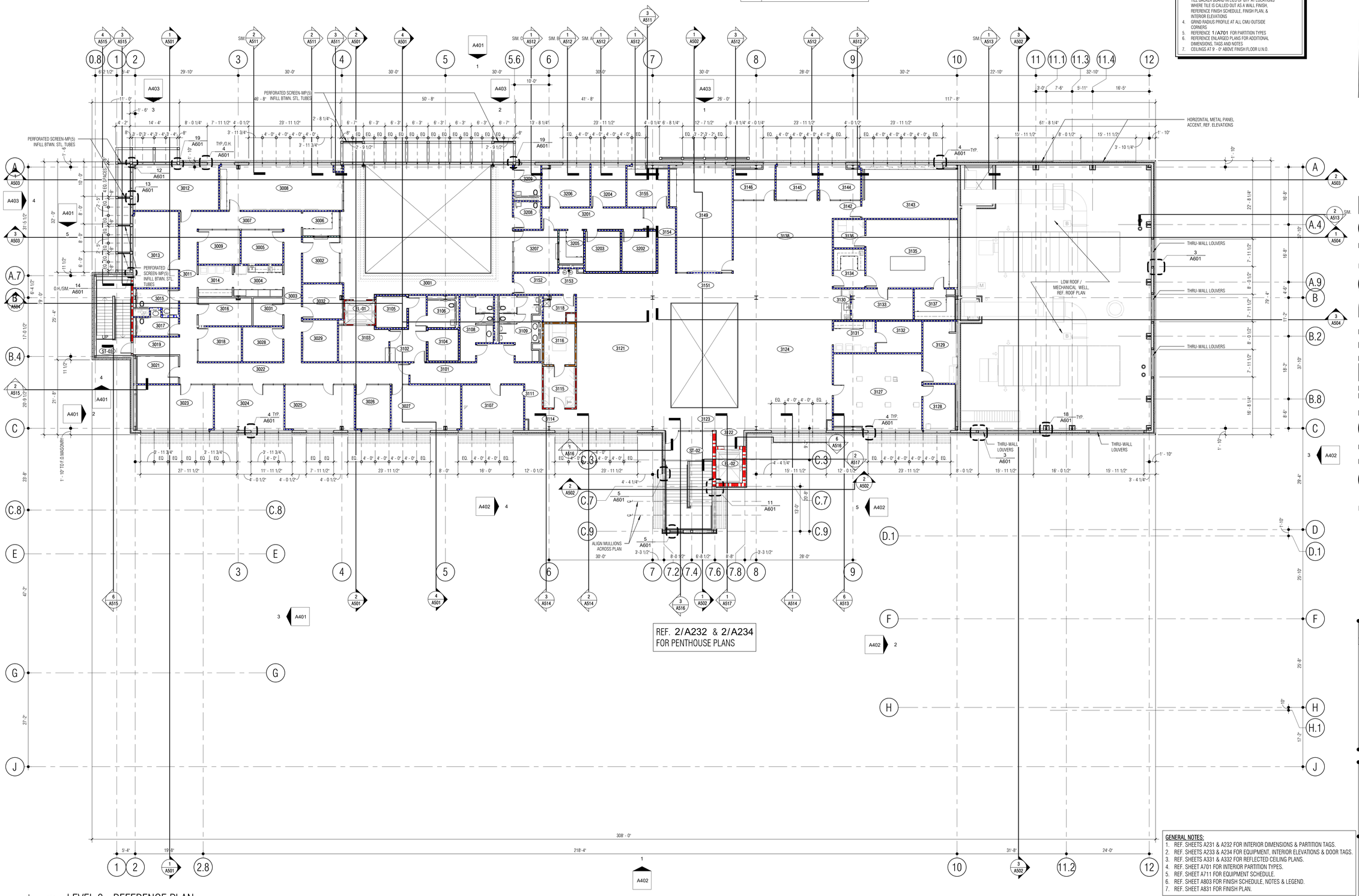

GENERAL NOTES:

1. REF. SHEETS A231 & A232 FOR INTERIOR DIMENSIONS & PARTITION TAGS.
2. REF. SHEETS A233 & A234 FOR EQUIPMENT, INTERIOR ELEVATIONS & DOOR TAGS.
3. REF. SHEETS A331 & A332 FOR REFLECTED CEILING PLANS.
4. REF. SHEET A701 FOR INTERIOR PARTITION TYPES.
5. REF. SHEET A711 FOR EQUIPMENT SCHEDULE.
6. REF. SHEET A803 FOR FINISH SCHEDULE, NOTES & LEGEND.
7. REF. SHEET A831 FOR FINISH PLAN.

1 LEVEL 3 - REFERENCE PLAN

SCALE: 3/32" = 1'-0"

NORTH

Architect: Brinkley Sargent Wigginton Architects (972) 960-9970
Landscape: Kendall Landscape Architecture (214) 739-3226
Structural: L.A. Fuess Partners, Inc (214) 593-1118
MEP: M-E Engineers (214) 741-1589
Civil: KSA Engineers, Inc (903) 236-7700
Technology: M-E Engineers (303) 421-6656

BRINKLEY SARGENT WIGGINTON ARCHITECTS

LONGVIEW POLICE DEPARTMENT

518 W. SOUTH ST. LONGVIEW, TEXAS 75601

HISTORY		
#	DATE	DESCRIPTION

REGISTERED ARCHITECT MICHAEL WAYNE WIGGINTON 9941 STATE OF TEXAS 08/19/2020

LEVEL 3 - REFERENCE PLAN

21719

08/19/2020

A230

BID ISSUE

8/19/2020 1:15:24 PM

D:\Revit Locals\LPD_CENTRAL_A19_Jacobsen_08-19-2020.rvt

© 2020 Brinkley Sargent Wigginton Architects, Inc.

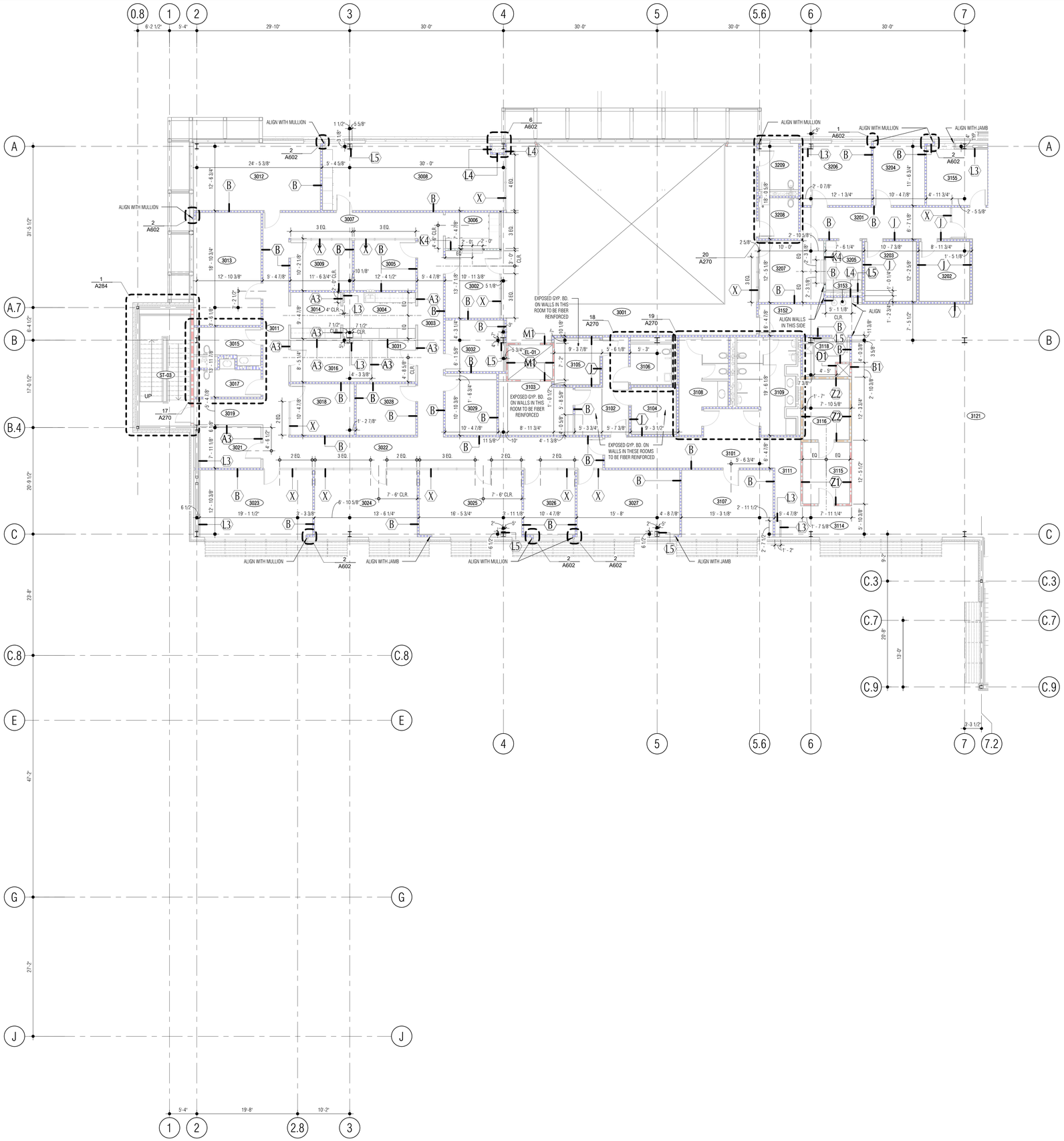

1 LEVEL 3 - FLOOR PLAN (WEST) - WALL TAGS, DIMENSIONS

SCALE: 1/8" = 1'-0"

NORTH

0' 4'0" 8'0"

LEGEND

- STUD WALL (NOT TO DECK)
- CMU WALL (NOT TO DECK)
- WALL (TO-DECK)
- 1-HOUR RATED WALL
- 2-HOUR RATED WALL
- SECURE PERIMETER A (TO DECK)
- SECURE PERIMETER B (TO DECK)
- SECURE PERIMETER B (NOT TO DECK)

SHEET NOTES:

1. STUD WALL DIMENSIONS ARE FACE OF STUD UNLESS NOTED OTHERWISE
2. CMU WALL DIMENSIONS ARE FACE OF CMU UNLESS NOTED OTHERWISE
3. PER SPECIFICATION 09 29 00 GYPSUM BOARD, USE TILE BACKER BOARD IN LIEU OF GYP AT LOCATIONS WHERE TILE IS CALLED OUT AS A WALL FINISH. REFERENCE FINISH SCHEDULE, FINISH PLAN, & INTERIOR ELEVATIONS
4. GRIND RADIUS PROFILE AT ALL CMU OUTSIDE CORNERS
5. REFERENCE **1/A701** FOR PARTITION TYPES
6. REFERENCE ENLARGED PLANS FOR ADDITIONAL DIMENSIONS, TAGS AND NOTES
7. CEILINGS AT 9' - 0" ABOVE FINISH FLOOR U.N.O.

ROOM SCHEDULE - LEVEL 3

NUMBER	ROOM NAME
3001	OVERLOOK
3002	RECEPTION / WAITING
3003	CORRIDOR
3004	COFFEE
3005	OFFICE MANAGER
3006	ADMIN. ASSIST.
3007	CORRIDOR
3008	CONFERENCE
3009	EXEC. ASSIST.
3011	CORRIDOR
3012	POLICE CHIEF
3013	ASSISTANT CHIEF
3014	WORK/COPY
3015	WOMENS
3016	PERSONNEL FILES
3017	MENS
3018	ADMIN. SERGEANT
3019	CORRIDOR
3021	CENTRAL SUPPLY
3022	CORRIDOR
3023	ASSIST. CHIEF
3024	CAPTAIN
3025	CAPTAIN
3026	SUPPORT SERVICES LT.
3027	CAPTAIN
3028	I.A. LIEUTENANT
3029	I.A. LIEUTENANT
3031	I.A. FILES
3032	CONF. (4) / INTERVIEW
3101	CORRIDOR
3102	RECEPTION
3103	SUSPECT WAITING
3104	INTERROGATION (3)
3105	INTERROGATION (3)
3106	TOILET
3107	P.I.O. / SOCIAL MEDIA
3108	WOMEN'S
3109	MEN'S
3111	CORRIDOR
3112	SHREDDER
3113	STORAGE
3114	CORRIDOR
3115	ELECTRICAL CLOSET
3116	IT/DATA CLOSET
3117	CORRIDOR
3118	JANITOR
3119	DETECTIVES
3121	DETECTIVES
3122	ELEVATOR DROP
3123	CORRIDOR
3124	DETECTIVES
3125	DETECTIVES
3126	CORRIDOR
3127	DETECTIVES
3128	SERGEANT
3129	STORAGE
3130	COFFEE
3131	COPY/WORK/COFFEE
3132	EQUIPMENT ROOM
3133	EVIDENCE STORAGE
3134	CYBER LAB RECEIVING
3135	TECH. INVESTIGATORS/CYBER LAB
3136	FORENSICS I.T.
3137	SOLDIER WORKSTATION
3138	TASK FORCE OFFICERS
3139	VIDEO STATION
3141	TASK FORCE OFFICERS
3142	CORRIDOR
3143	TECH. INVESTIGATORS
3144	SERGEANT
3145	SERGEANT
3146	SERGEANT
3147	CORRIDOR
3148	DETECTIVE
3149	STRATEGY CONF.
3151	CORRIDOR
3152	CORRIDOR
3153	FOUNTAIN
3154	CORRIDOR
3155	LIEUTENANT
3201	CORRIDOR
3202	INTERVIEW (4)
3203	INTERVIEW (4)
3204	VICTIM ASSIST
3205	ADMIN. ASSIST.
3206	SOFT INTERVIEW
3207	PUBLIC WAITING
3208	TOILET
3209	TOILET
4001	PENTHOUSE
4002	ELEV. EQUIP.
EL-01	ELEVATOR
EL-02	STAFF ELEVATOR
ST-01	LOBBY STAIR
ST-02	STAFF STAIR
ST-03	EXIT STAIR

GENERAL NOTES:

1. REF. SHEET A203 FOR EXTERIOR DIMENSIONS, PLAN DETAILS, BUILDING & WALL SECTION CALLOUTS.
2. REF. SHEET A233 FOR EQUIPMENT, INTERIOR ELEVATIONS & DOOR TAGS.
3. REF. SHEET A331 FOR REFLECTED CEILING PLAN.
4. REF. SHEET A701 FOR INTERIOR PARTITION TYPES.
5. REF. SHEET A711 FOR EQUIPMENT SCHEDULE.
6. REF. SHEET A803 FOR FINISH SCHEDULE, NOTES & LEGEND.
7. REF. SHEET A831 FOR FINISH PLAN.

Architect: Brinkley Sargent Wigginton Architects (972) 960-9970
Landscape: Kendall Landscape Architecture (214) 739-3226
Structural: L.A. Fuess Partners, Inc (214) 593-1118
MEP: M-E Engineers (214) 741-1589
Civil: KSA Engineers, Inc (903) 236-7700
Technology: M-E Engineers (303) 421-6656

BRINKLEY SARGENT WIGINTON ARCHITECTS

LONGVIEW POLICE DEPARTMENT

518 W. SOUTH ST. LONGVIEW, TEXAS 75601

HISTORY

#	DATE	DESCRIPTION

08/19/2020

LEVEL 3 - FLOOR PLAN (WEST) - WALL TAGS, DIMENSIONS

21719

08/19/2020

A231

BID ISSUE

8/19/2020 11:51:17 PM

E:\Revit Locals\LPD_CENTRAL_A19_Jacobsen_08-19-2020.rvt

© 2020 Brinkley Sargent Wigginton Architects, Inc.

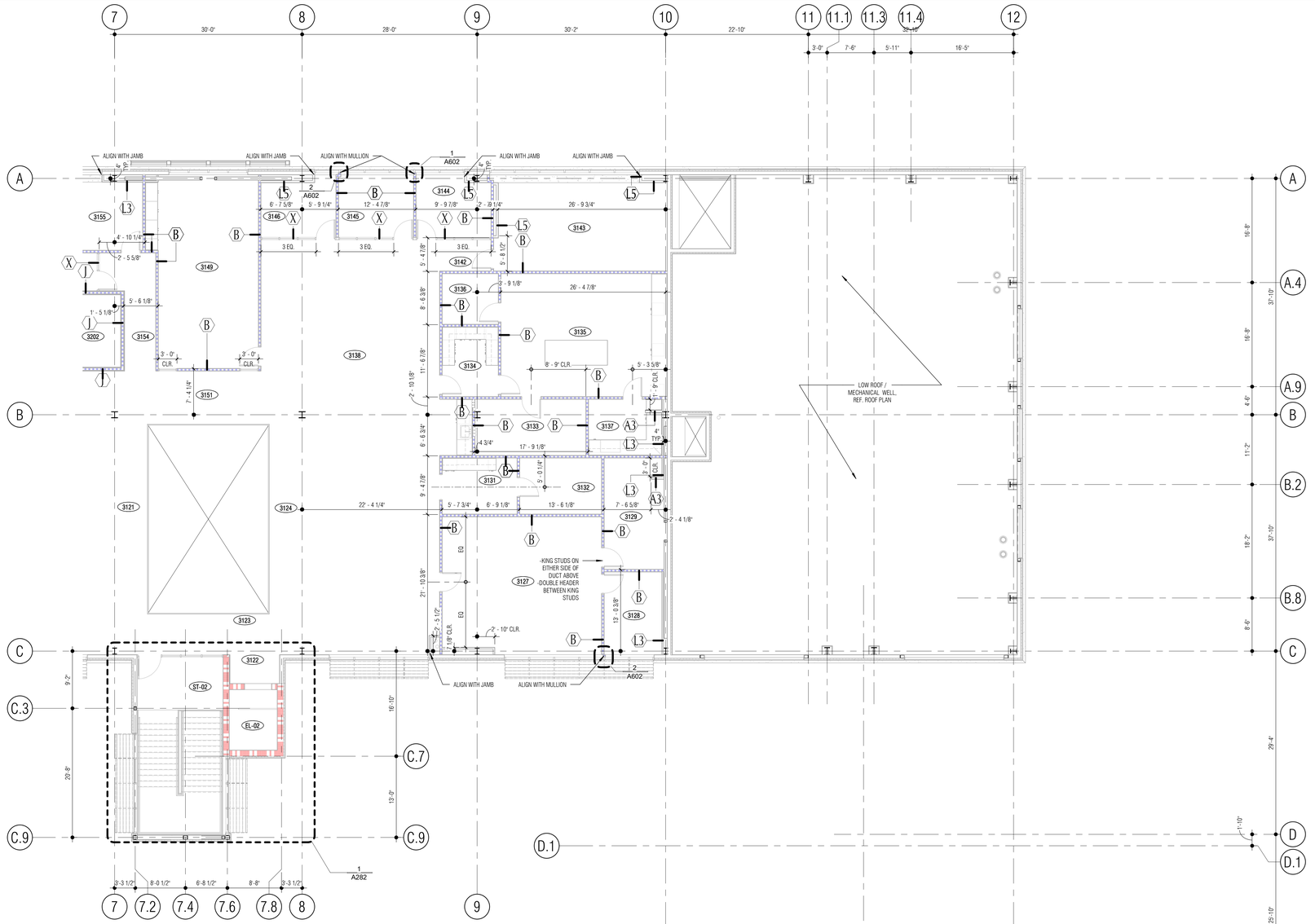

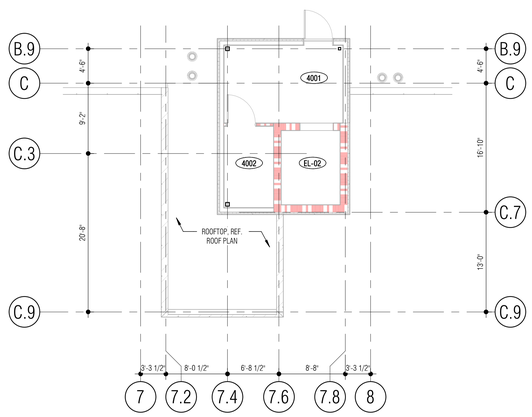

2 PENTHOUSE - WALL TAGS, DIMENSIONS
SCALE: 1/8" = 1'-0"

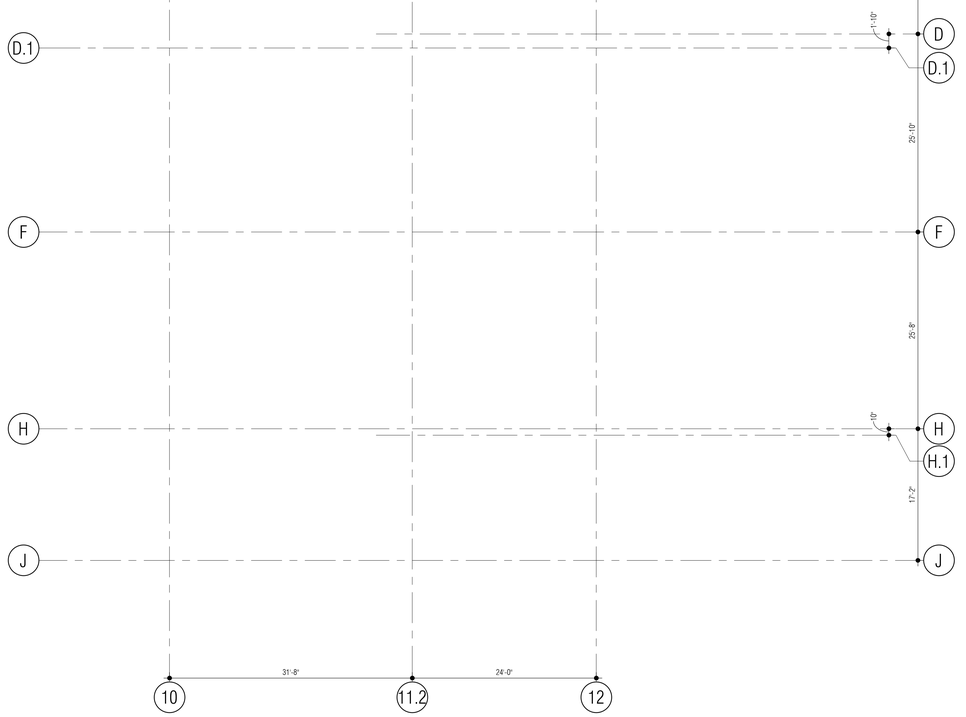

1 LEVEL 3 - FLOOR PLAN (EAST) - WALL TAGS, DIMENSIONS
SCALE: 1/8" = 1'-0"

NORTH

LEGEND

- STUD WALL (NOT TO DECK)
- CMU WALL (NOT TO DECK)
- WALL (TO-DECK)
- 1-HOUR RATED WALL
- 2-HOUR RATED WALL
- SECURE PERIMETER A (TO DECK)
- SECURE PERIMETER B (TO DECK)
- SECURE PERIMETER B (NOT TO DECK)

SHEET NOTES:

1. STUD WALL DIMENSIONS ARE FACE OF STUD UNLESS NOTED OTHERWISE
2. CMU WALL DIMENSIONS ARE FACE OF CMU UNLESS NOTED OTHERWISE
3. PER SPECIFICATION 09 29 00 GYPSUM BOARD, USE TILE BACKER BOARD IN LIEU OF GYP AT LOCATIONS WHERE TILE IS CALLED OUT AS A WALL FINISH. REFERENCE FINISH SCHEDULE, FINISH PLAN, & INTERIOR ELEVATIONS.
4. GRIND RADIUS PROFILE AT ALL CMU OUTSIDE CORNERS.
5. REFERENCE **1/A701** FOR PARTITION TYPES
6. REFERENCE ENLARGED PLANS FOR ADDITIONAL DIMENSIONS, TAGS AND NOTES
7. CEILINGS AT 9' - 0" ABOVE FINISH FLOOR U.N.O.

ROOM SCHEDULE - LEVEL 3

NUMBER	ROOM NAME
3001	OVERLOOK
3002	RECEPTION / WAITING
3003	CORRIDOR
3004	COFFEE
3005	OFFICE MANAGER
3006	ADMIN. ASSIST.
3007	CORRIDOR
3008	CONFERENCE
3009	EXEC. ASSIST.
3011	CORRIDOR
3012	POLICE CHIEF
3013	ASSISTANT CHIEF
3014	WORK/COPY
3015	WOMENS
3016	PERSONNEL FILES
3017	MENS
3018	ADMIN. SERGEANT
3019	CORRIDOR
3021	CENTRAL SUPPLY
3022	CORRIDOR
3023	ASSIST. CHIEF
3024	CAPTAIN
3025	CAPTAIN
3026	SUPPORT SERVICES LT.
3027	CAPTAIN
3028	I.A. LIEUTENANT
3029	I.A. LIEUTENANT
3031	I.A. FILES
3032	CONF. (4) / INTERVIEW
3101	CORRIDOR
3102	RECEPTION
3103	SUSPECT WAITING
3104	INTERROGATION (3)
3105	INTERROGATION (3)
3106	TOILET
3107	P.I.O. / SOCIAL MEDIA
3108	WOMEN'S
3109	MEN'S
3111	CORRIDOR
3112	SHREDDER
3113	STORAGE
3114	CORRIDOR
3115	ELECTRICAL CLOSET
3116	IT/DATA CLOSET
3117	CORRIDOR
3118	JANITOR
3119	DETECTIVES
3121	DETECTIVES
3122	ELEVATOR DROP
3123	CORRIDOR
3124	DETECTIVES
3125	DETECTIVES
3126	CORRIDOR
3127	DETECTIVES
3128	SERGEANT
3129	STORAGE
3130	COFFEE
3131	COPY/WORK/COFFEE
3132	EQUIPMENT ROOM
3133	EVIDENCE STORAGE
3134	CYBER LAB RECEIVING
3135	TECH. INVESTIGATORS/CYBER LAB
3136	FORENSICS I.T.
3137	SOLDER WORKSTATION
3138	TASK FORCE OFFICERS
3139	VIDEO STATION
3141	TASK FORCE OFFICERS
3142	CORRIDOR
3143	TECH. INVESTIGATORS
3144	SERGEANT
3145	SERGEANT
3146	SERGEANT
3147	CORRIDOR
3148	DETECTIVE
3149	STRATEGY CONF.
3151	CORRIDOR
3152	CORRIDOR
3153	FOUNTAIN
3154	CORRIDOR
3155	LIEUTENANT
3201	CORRIDOR
3202	INTERVIEW (4)
3203	INTERVIEW (4)
3204	VICTIM ASSIST
3205	ADMIN. ASSIST.
3206	SOFT INTERVIEW
3207	PUBLIC WAITING
3208	TOILET
3209	TOILET
4001	PENTHOUSE
4002	ELEV. EQUIP.
EL-01	ELEVATOR
EL-02	STAFF ELEVATOR
ST-01	LOBBY STAIR
ST-02	STAFF STAIR
ST-03	EXT STAIR

Architect: Brinkley Sargent Wigginton Architects (972) 960-9970
Landscape: Kendall Landscape Architecture (214) 739-3226
Structural: L.A. Fuess Partners, Inc (214) 593-1118
MEP: M-E Engineers (214) 741-1589
Civil: KSA Engineers, Inc (903) 236-7700
Technology: M-E Engineers (303) 421-6656

BRINKLEY SARGENT WIGINTON ARCHITECTS

LONGVIEW POLICE DEPARTMENT

518 W. SOUTH ST. LONGVIEW, TEXAS 75601

HISTORY

#	DATE	DESCRIPTION

REGISTERED ARCHITECT STATE OF TEXAS 9941 08/19/2020

LEVEL 3 - FLOOR PLAN (EAST) - WALL TAGS, DIMENSIONS

GENERAL NOTES:

1. REF. SHEET A203 FOR EXTERIOR DIMENSIONS, PLAN DETAILS, BUILDING & WALL SECTION CALLOUTS.
2. REF. SHEET A234 FOR EQUIPMENT, INTERIOR ELEVATIONS & DOOR TAGS.
3. REF. SHEET A332 FOR REFLECTED CEILING PLAN.
4. REF. SHEET A701 FOR INTERIOR PARTITION TYPES.
5. REF. SHEET A711 FOR EQUIPMENT SCHEDULE.
6. REF. SHEET A803 FOR FINISH SCHEDULE, NOTES & LEGEND.
7. REF. SHEET A831 FOR FINISH PLAN.

21719
08/19/2020

A232

BID ISSUE

8/19/2020 1:16:56 PM

E:\Revit Local\LPD_CENTRAL_A19_Jacobsen_08-19-2020.rvt

© 2020 Brinkley Sargent Wigginton Architects, Inc.

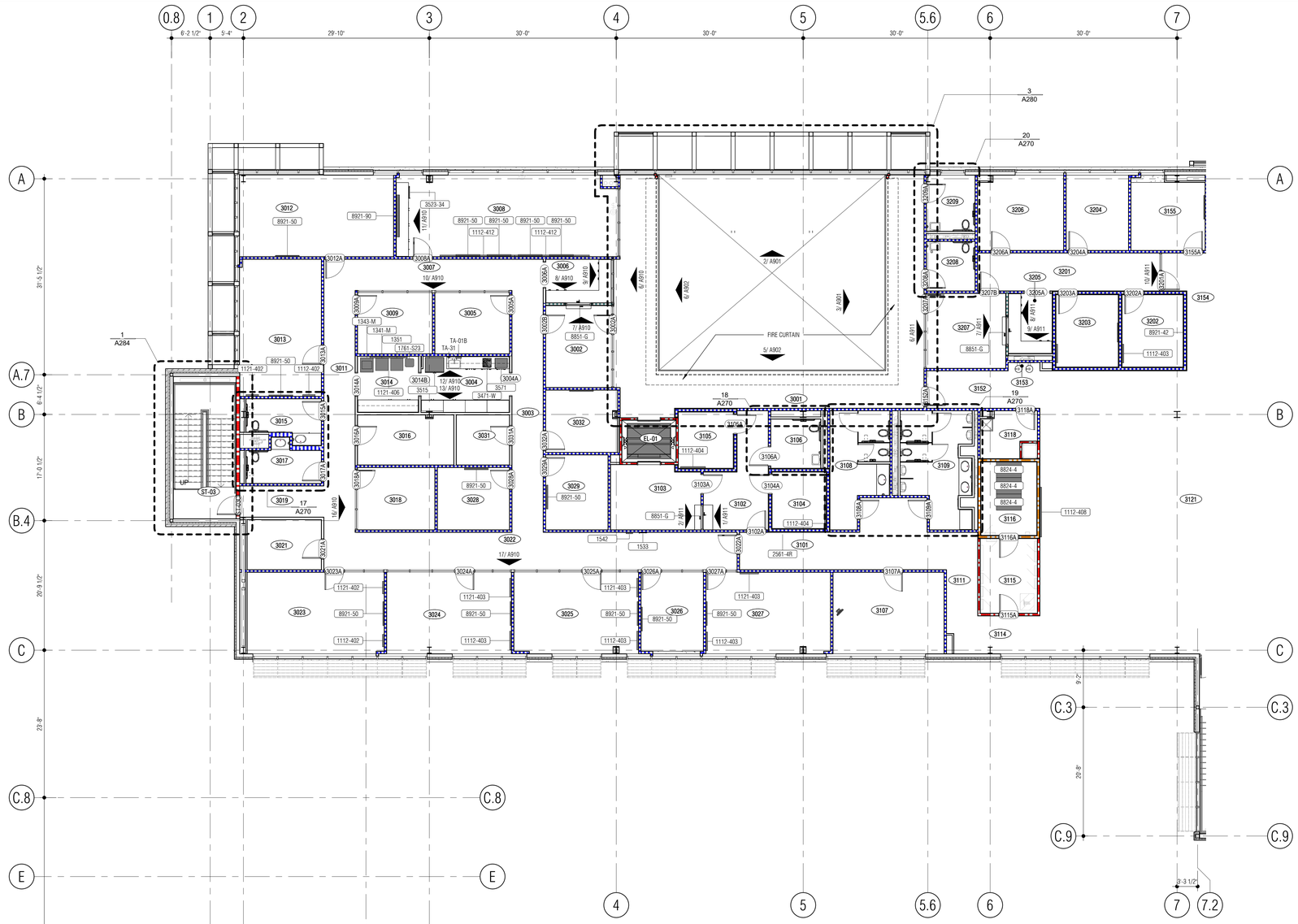

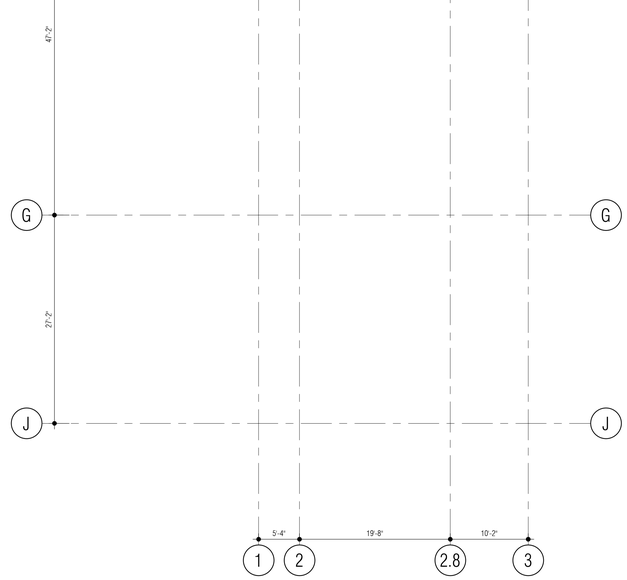

LEGEND

- STUD WALL (NOT TO DECK)
- CMU WALL (NOT TO DECK)
- WALL (TO-DECK)
- 1-HOUR RATED WALL
- 2-HOUR RATED WALL
- SECURE PERIMETER A (TO DECK)
- SECURE PERIMETER B (TO DECK)
- SECURE PERIMETER B (NOT TO DECK)

SHEET NOTES:

1. STUD WALL DIMENSIONS ARE FACE OF STUD UNLESS NOTED OTHERWISE
2. CMU WALL DIMENSIONS ARE FACE OF CMU UNLESS NOTED OTHERWISE
3. PER SPECIFICATION 09 29 00 GYPSUM BOARD, USE TILE BACKER BOARD IN LIEU OF GYP AT LOCATIONS WHERE TILE IS CALLED OUT AS A WALL FINISH. REFERENCE FINISH SCHEDULE, FINISH PLAN, & INTERIOR ELEVATIONS
4. GRIND RADIUS PROFILE AT ALL CMU OUTSIDE CORNERS
5. REFERENCE **1 / A701** FOR PARTITION TYPES
6. REFERENCE ENLARGED PLANS FOR ADDITIONAL DIMENSIONS, TAGS AND NOTES
7. CEILINGS AT 9' - 0" ABOVE FINISH FLOOR U.N.O.

ROOM SCHEDULE - LEVEL 3

NUMBER	ROOM NAME
3001	OVERLOOK
3002	RECEPTION / WAITING
3003	CORRIDOR
3004	COFFEE
3005	OFFICE MANAGER
3006	ADMIN. ASSIST.
3007	CORRIDOR
3008	CONFERENCE
3009	EXEC. ASSIST.
3011	CORRIDOR
3012	POLICE CHIEF
3013	ASSISTANT CHIEF
3014	WORK/COPY
3015	WOMENS
3016	PERSONNEL FILES
3017	MENS
3018	ADMIN. SERGEANT
3019	CORRIDOR
3021	CENTRAL SUPPLY
3022	CORRIDOR
3023	ASSIST. CHIEF
3024	CAPTAIN
3025	CAPTAIN
3026	SUPPORT SERVICES LT.
3027	CAPTAIN
3028	I.A. LIEUTENANT
3029	I.A. LIEUTENANT
3031	I.A. FILES
3032	CONF. (4) / INTERVIEW
3101	CORRIDOR
3102	RECEPTION
3103	SUSPECT WAITING
3104	INTERROGATION (3)
3105	INTERROGATION (3)
3106	TOILET
3107	P.I.O. / SOCIAL MEDIA
3108	WOMEN'S
3109	MEN'S
3111	CORRIDOR
3112	SHREDDER
3113	STORAGE
3114	CORRIDOR
3115	ELECTRICAL CLOSET
3116	IT/DATA CLOSET
3117	CORRIDOR
3118	JANITOR
3119	DETECTIVES
3121	DETECTIVES
3122	ELEVATOR DROP
3123	CORRIDOR
3124	DETECTIVES
3125	DETECTIVES
3126	CORRIDOR
3127	DETECTIVES
3128	SERGEANT
3129	STORAGE
3130	COFFEE
3131	COPY/WORK/COFFEE
3132	EQUIPMENT ROOM
3133	EVIDENCE STORAGE
3134	CYBER LAB RECEIVING
3135	TECH. INVESTIGATORS/CYBER LAB
3136	FORENSICS I.T.
3137	SOLDER WORKSTATION
3138	TASK FORCE OFFICERS
3139	VIDEO STATION
3141	TASK FORCE OFFICERS
3142	CORRIDOR
3143	TECH. INVESTIGATORS
3144	SERGEANT
3145	SERGEANT
3146	SERGEANT
3147	CORRIDOR
3148	DETECTIVE
3149	STRATEGY CONF.
3151	CORRIDOR
3152	CORRIDOR
3153	FOUNTAIN
3154	CORRIDOR
3155	LIEUTENANT
3201	CORRIDOR
3202	INTERVIEW (4)
3203	INTERVIEW (4)
3204	VICTIM ASSIST
3205	ADMIN. ASSIST.
3206	SOFT INTERVIEW
3207	PUBLIC WAITING
3208	TOILET
3209	TOILET
4001	PENTHOUSE
4002	ELEV. EQUIP.
EL-01	ELEVATOR
EL-02	STAFF ELEVATOR
ST-01	LOBBY STAIR
ST-02	STAFF STAIR
ST-03	EXIT STAIR

Architect: Brinkley Sargent Wigginton Architects (972) 960-9970
Landscape: Kendall Landscape Architecture (214) 739-3226
Structural: L.A. Fuess Partners, Inc (214) 593-1118
MEP: M-E Engineers (214) 741-1589
Civil: KSA Engineers, Inc (903) 236-7700
Technology: M+E Engineers (303) 421-6656

BRINKLEY SARGENT WIGINTON ARCHITECTS

LONGVIEW POLICE DEPARTMENT

518 W. SOUTH ST. LONGVIEW, TEXAS 75601

HISTORY

#	DATE	DESCRIPTION

REGISTERED ARCHITECT RICHARD W. SARGENT 9941 STATE OF TEXAS
08/19/2020

GENERAL NOTES:

1. REF. SHEET A203 FOR EXTERIOR DIMENSIONS, PLAN DETAILS, BUILDING & WALL SECTION CALLOUTS.
2. REF. SHEET A231 FOR INTERIOR DIMENSIONS & PARTITION TAGS.
3. REF. SHEET A331 FOR REFLECTED CEILING PLAN.
4. REF. SHEET A701 FOR INTERIOR PARTITION TYPES.
5. REF. SHEET A711 FOR EQUIPMENT SCHEDULE.
6. REF. SHEET A803 FOR FINISH SCHEDULE, NOTES & LEGEND.
7. REF. SHEET A831 FOR FINISH PLAN.

LEVEL 3 - FLOOR PLAN (WEST) - EQUIPMENT, INTERIOR ELEVATIONS, DOOR TAGS

21719
08/19/2020
A233

BID ISSUE

NORTH

1 LEVEL 3 - FLOOR PLAN (WEST) - EQUIPMENT, INTERIOR ELEVATIONS, DOOR TAGS

SCALE: 1/8" = 1'-0"

0" 4'0" 8'0"

8/18/2020 11:17:51 PM

D:\Revit Locals\LPD_CENTRAL_A19_bscanner_08-18-2020.rvt

© 2020 Brinkley Sargent Wigginton Architects, Inc.

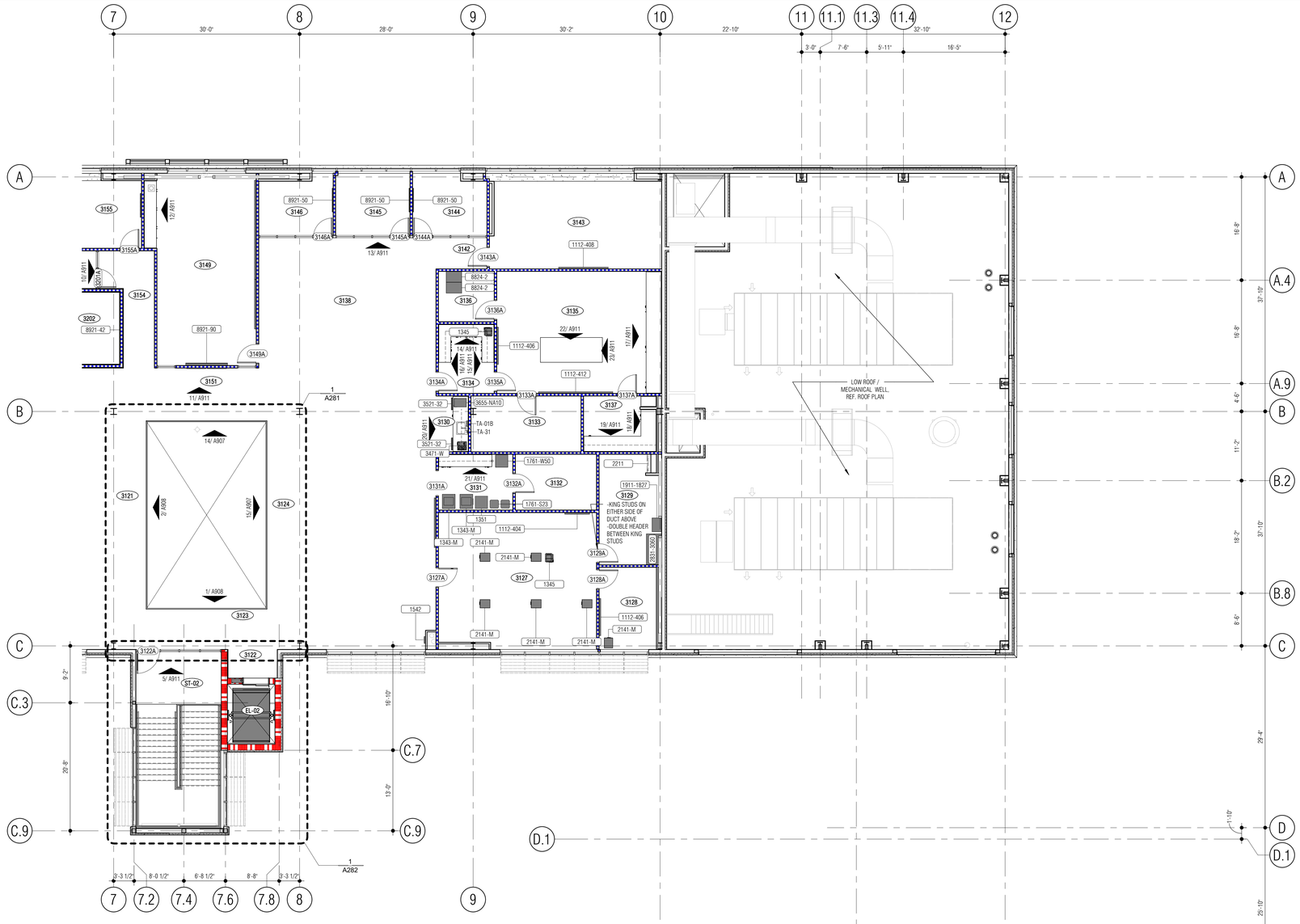

1 LEVEL 3 - FLOOR PLAN (EAST) - EQUIPMENT, INTERIOR ELEVATIONS, DOOR TAGS

SCALE: 1/8" = 1'-0"

NORTH

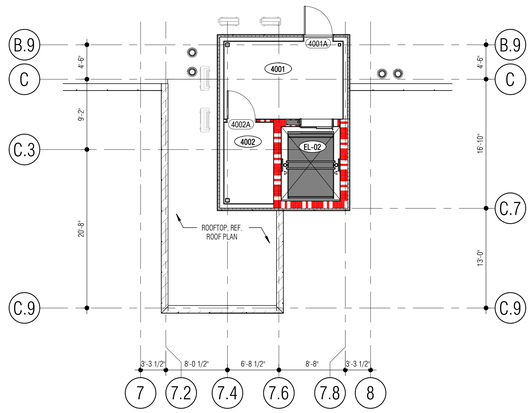

2 PENTHOUSE - EQUIPMENT, INTERIOR ELEVATIONS, DOOR TAGS

SCALE: 1/8" = 1'-0"

NORTH

LEGEND

- STUD WALL (NOT TO DECK)
- CMU WALL (NOT TO DECK)
- WALL (TO DECK)
- 1-HOUR RATED WALL
- 2-HOUR RATED WALL
- SECURE PERIMETER A (TO DECK)
- SECURE PERIMETER B (TO DECK)
- SECURE PERIMETER B (NOT TO DECK)

SHEET NOTES:

1. STUD WALL DIMENSIONS ARE FACE OF STUD UNLESS NOTED OTHERWISE
2. CMU WALL DIMENSIONS ARE FACE OF CMU UNLESS NOTED OTHERWISE
3. PER SPECIFICATION 09 29 00 GYPSUM BOARD, USE TILE BACKER BOARD IN LIEU OF GYP AT LOCATIONS WHERE TILE IS CALLED OUT AS A WALL FINISH. REFERENCE FINISH SCHEDULE, FINISH PLAN, & INTERIOR ELEVATIONS
4. GRIND RADIUS PROFILE AT ALL CMU OUTSIDE CORNERS
5. REFERENCE **1/A701** FOR PARTITION TYPES
6. REFERENCE ENLARGED PLANS FOR ADDITIONAL DIMENSIONS, TAGS AND NOTES
7. CEILINGS AT 9' - 0" ABOVE FINISH FLOOR U.N.O.

ROOM SCHEDULE - LEVEL 3

NUMBER	ROOM NAME
3001	OVERLOOK
3002	RECEPTION / WAITING
3003	CORRIDOR
3004	COFFEE
3005	OFFICE MANAGER
3006	ADMIN. ASSIST.
3007	CORRIDOR
3008	CONFERENCE
3009	EXEC. ASSIST.
3011	CORRIDOR
3012	POLICE CHIEF
3013	ASSISTANT CHIEF
3014	WORK/COPY
3015	WOMENS
3016	PERSONNEL FILES
3017	MENS
3018	ADMIN. SERGEANT
3019	CORRIDOR
3021	CENTRAL SUPPLY
3022	CORRIDOR
3023	ASSIST. CHIEF
3024	CAPTAIN
3025	CAPTAIN
3026	SUPPORT SERVICES LT.
3027	CAPTAIN
3028	I.A. LIEUTENANT
3029	I.A. LIEUTENANT
3031	I.A. FILES
3032	CONF. (4) / INTERVIEW
3101	CORRIDOR
3102	RECEPTION
3103	SUSPECT WAITING
3104	INTERROGATION (3)
3105	INTERROGATION (3)
3106	TOILET
3107	P.I.O. / SOCIAL MEDIA
3108	WOMEN'S
3109	MEN'S
3111	CORRIDOR
3112	SHREDDER
3113	STORAGE
3114	CORRIDOR
3115	ELECTRICAL CLOSET
3116	IT/DATA CLOSET
3117	CORRIDOR
3118	JANITOR
3119	DETECTIVES
3121	DETECTIVES
3122	ELEVATOR DROP
3123	CORRIDOR
3124	DETECTIVES
3125	DETECTIVES
3126	CORRIDOR
3127	DETECTIVES
3128	SERGEANT
3129	STORAGE
3130	COFFEE
3131	COPY/WORK/COFFEE
3132	EQUIPMENT ROOM
3133	EVIDENCE STORAGE
3134	CYBER LAB RECEIVING
3135	TECH. INVESTIGATORS/CYBER LAB
3136	FORENSICS I.T.
3137	SOLDER WORKSTATION
3138	TASK FORCE OFFICERS
3139	VIDEO STATION
3141	TASK FORCE OFFICERS
3142	CORRIDOR
3143	TECH. INVESTIGATORS
3144	SERGEANT
3145	SERGEANT
3146	SERGEANT
3147	CORRIDOR
3148	DETECTIVE
3149	STRATEGY CONF.
3151	CORRIDOR
3152	CORRIDOR
3153	FOUNTAIN
3154	CORRIDOR
3155	LIEUTENANT
3201	CORRIDOR
3202	INTERVIEW (4)
3203	INTERVIEW (4)
3204	VICTIM ASSIST
3205	ADMIN. ASSIST
3206	SOFT INTERVIEW
3207	PUBLIC WAITING
3208	TOILET
3209	TOILET
4001	PENTHOUSE
4002	ELEV. EQUIP.
EL-01	ELEVATOR
EL-02	STAFF ELEVATOR
ST-01	LOBBY STAIR
ST-02	STAFF STAIR
ST-03	EXIT STAIR

GENERAL NOTES:

1. REF. SHEET A203 FOR EXTERIOR DIMENSIONS, PLAN DETAILS, BUILDING & WALL SECTION CALLOUTS.
2. REF. SHEET A232 FOR INTERIOR DIMENSIONS & PARTITION TAGS.
3. REF. SHEET A332 FOR REFLECTED CEILING PLAN.
4. REF. SHEET A701 FOR INTERIOR PARTITION TYPES.
5. REF. SHEET A711 FOR EQUIPMENT SCHEDULE.
6. REF. SHEET A803 FOR FINISH SCHEDULE, NOTES & LEGEND.
7. REF. SHEET A831 FOR FINISH PLAN.

Architect: Brinkley Sargent Wigginton Architects (972) 960-9970
Landscape: Kendall Landscape Architecture (214) 739-3226
Structural: L.A. Fuess Partners, Inc (214) 593-1118
MEP: M-E Engineers (214) 741-1589
Civil: KSA Engineers, Inc (903) 236-7700
Technology: M-E Engineers (303) 421-6656

BRINKLEY SARGENT WIGINTON ARCHITECTS

LONGVIEW POLICE DEPARTMENT

518 W. SOUTH ST. LONGVIEW, TEXAS 75601

HISTORY

#	DATE	DESCRIPTION

REGISTERED ARCHITECT BRIAN SARGENT 9941 STATE OF TEXAS

08/19/2020

LEVEL 3 - FLOOR PLAN (EAST) - EQUIPMENT, INTERIOR ELEVATIONS, DOOR TAGS

21719

08/19/2020

A234

BID ISSUE

8/18/2020 1:18:33 PM

D:\Revit Locals\LFS_CENTRAL_A19_Bscanner_08-18-2020.rvt

© 2020 Brinkley Sargent Wigginton Architects, Inc.

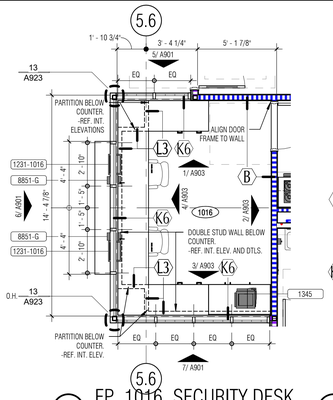

1 EP 1016 SECURITY DESK
SCALE: 1/4" = 1'-0"

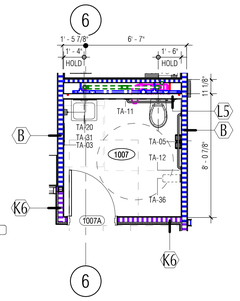

2 EP 1007 PUBLIC TOILET
SCALE: 1/4" = 1'-0"

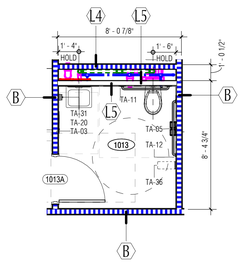

3 EP 1013 TOILET
SCALE: 1/4" = 1'-0"

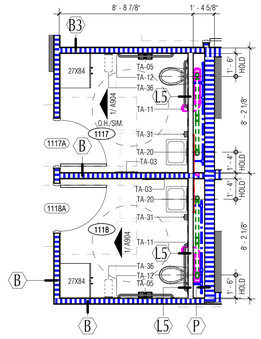

4 EP 1117-1118 TOILET
SCALE: 1/4" = 1'-0"

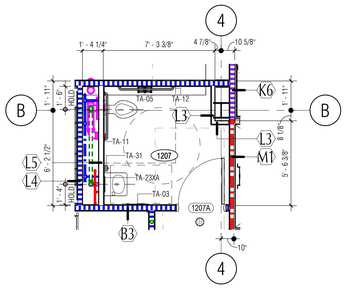

5 EP 1207 TOILET
SCALE: 1/4" = 1'-0"

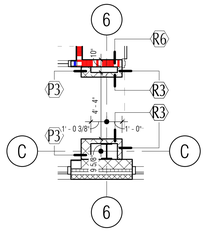

6 EP 1306 CORRIDOR
SCALE: 1/4" = 1'-0"

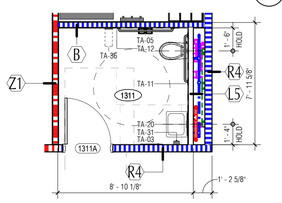

7 EP 1311 STAFF TOILET
SCALE: 1/4" = 1'-0"

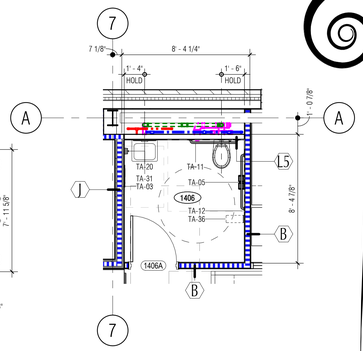

8 EP 1406 TOILET
SCALE: 1/4" = 1'-0"

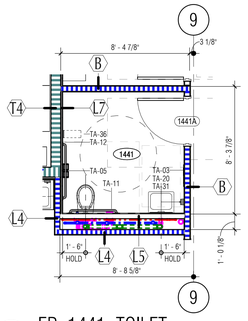

9 EP 1441 TOILET
SCALE: 1/4" = 1'-0"

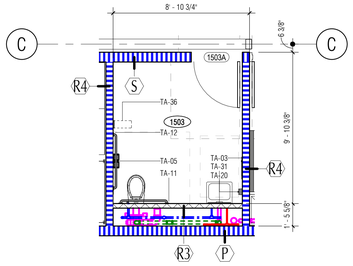

10 EP 1503 TOILET
SCALE: 1/4" = 1'-0"

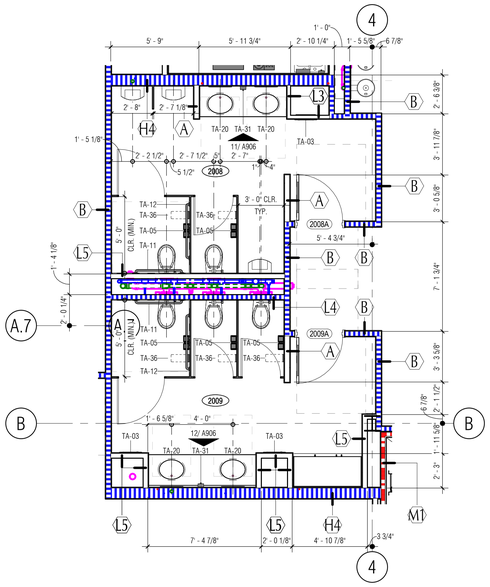

11 EP 2008-2009 MEN'S & WOMEN'S
SCALE: 1/4" = 1'-0"

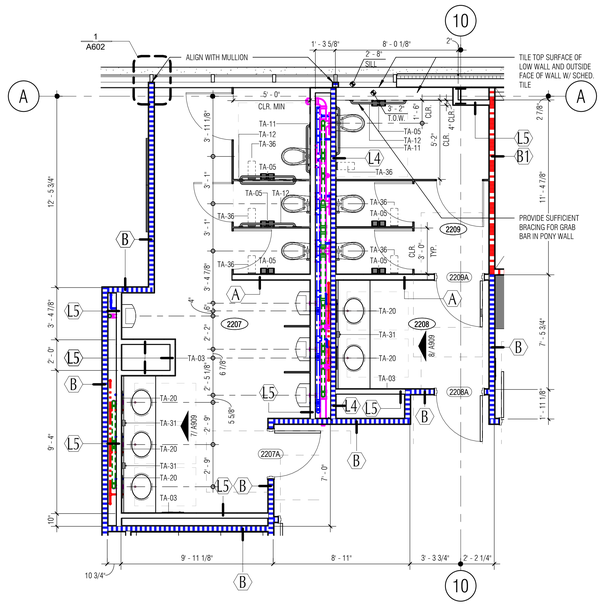

12 EP 2207-2209 MEN'S & WOMEN'S
SCALE: 1/4" = 1'-0"

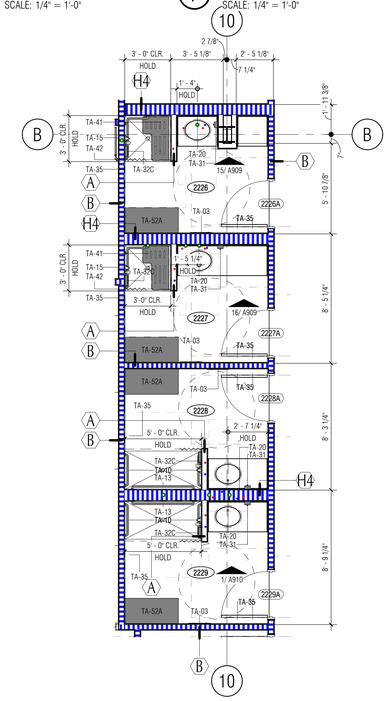

13 EP 2226-2229 SHOWER
SCALE: 1/4" = 1'-0"

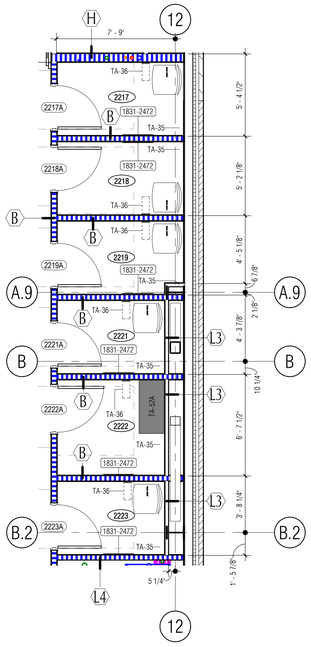

14 EP 2217-2223 DRESSING
SCALE: 1/4" = 1'-0"

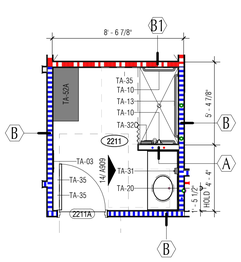

15 EP 2211 ACCESSIBLE SHOWER
SCALE: 1/4" = 1'-0"

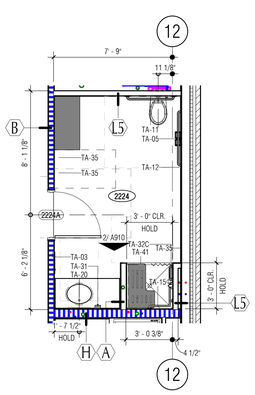

16 EP 2224 TOILET/SHOWER
SCALE: 1/4" = 1'-0"

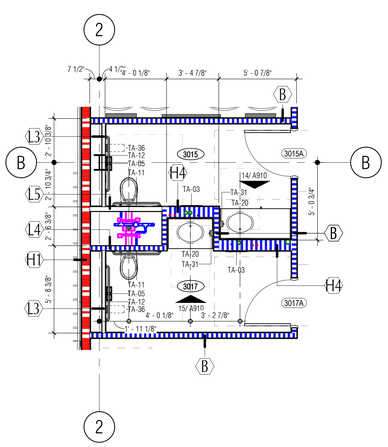

17 EP 3015-3017 MEN'S & WOMEN'S
SCALE: 1/4" = 1'-0"

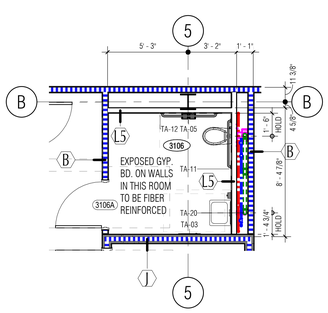

18 EP 3106 TOILET
SCALE: 1/4" = 1'-0"

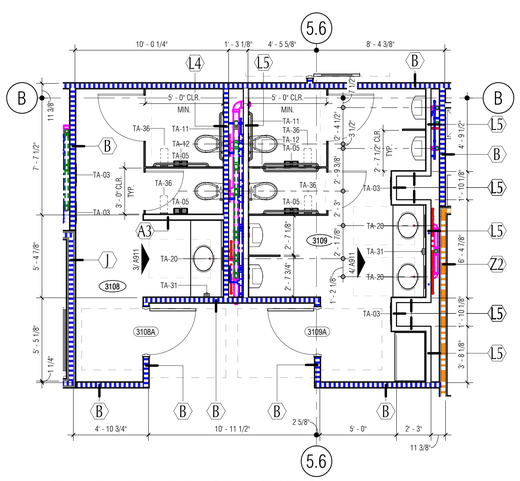

19 EP 3108-3109 MEN'S & WOMEN'S
SCALE: 1/4" = 1'-0"

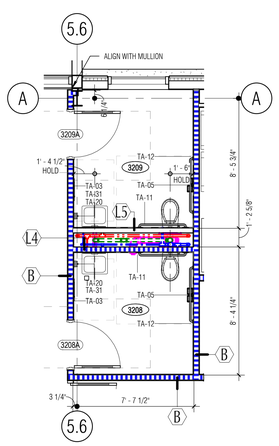

20 EP 3208-3209 TOILET
SCALE: 1/4" = 1'-0"

Architect: Brinkley Sargent Wigginton Architects (972) 960-9970
Landscape: Kendall Landscape Architecture (214) 739-3226
Structural: L.A. Fuess Partners, Inc (214) 593-1118
MEP: M-E Engineers (214) 741-1589
Civil: KSA Engineers, Inc (903) 236-7700
Technology: M-E Engineers (303) 421-6656

BRINKLEY SARGENT WIGINTON ARCHITECTS

LONGVIEW POLICE DEPARTMENT

518 W. SOUTH ST. LONGVIEW, TEXAS 75601

HISTORY		
#	DATE	DESCRIPTION

BRIAN HOLD SARGENT 9941 STATE OF TEXAS
08/19/2020

ENLARGED FLOOR PLANS

BID ISSUE

21719
08/19/2020

A270

6/26/2020 3:51:35 PM

G:\Revit Locals\LPD_CENTRAL_A19_JHoneycutt.rvt

© 2020 Brinkley Sargent Wigginton Architects, Inc.

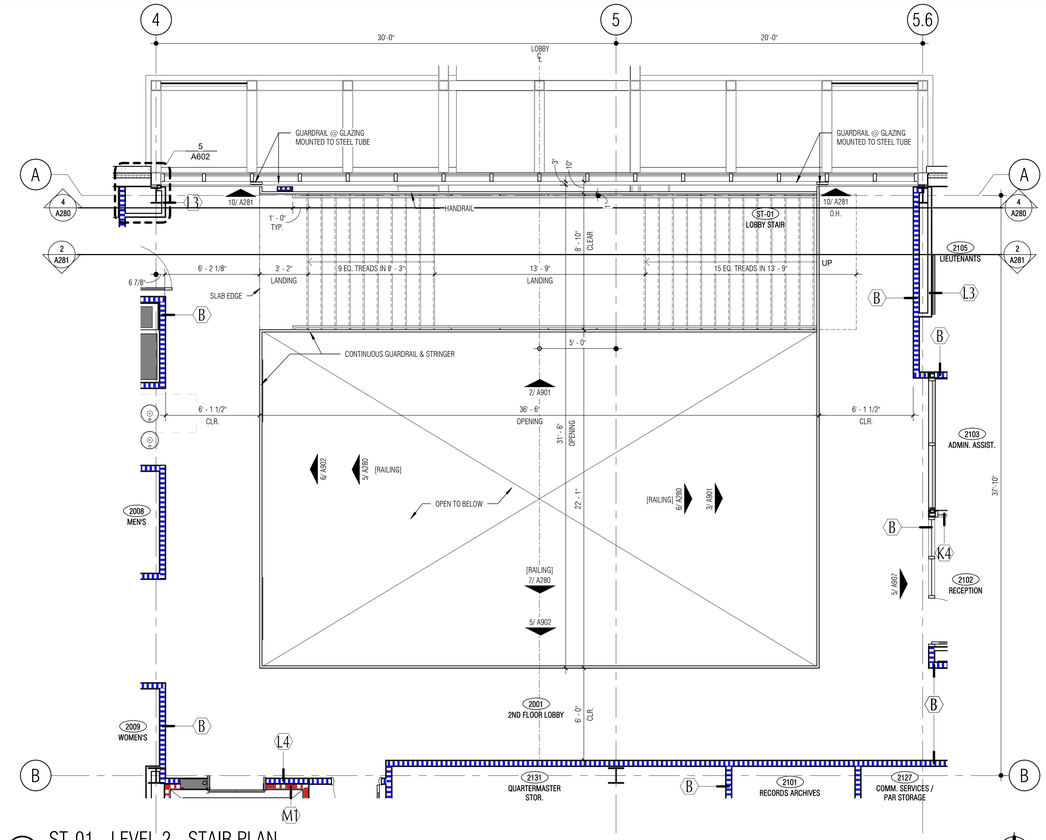

1 ST-01 - LEVEL 2 - STAIR PLAN
SCALE: 1/4" = 1'-0"

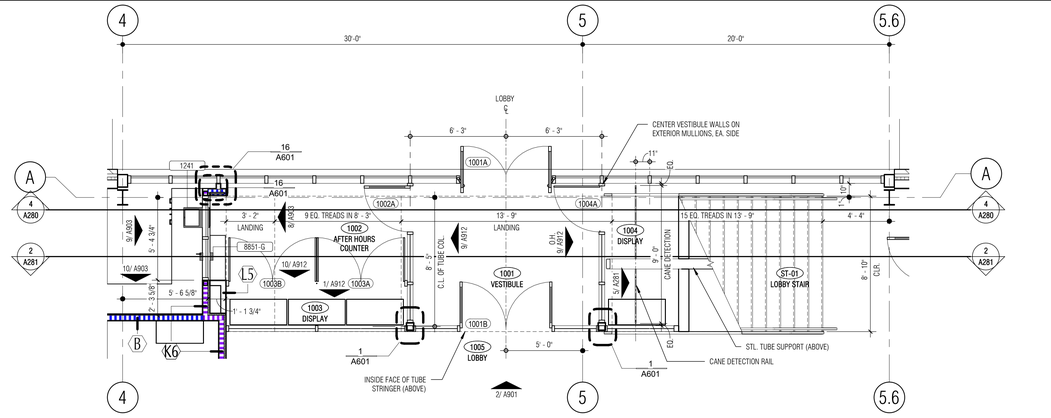

2 ST-01 - LEVEL 1 - STAIR PLAN
SCALE: 1/4" = 1'-0"

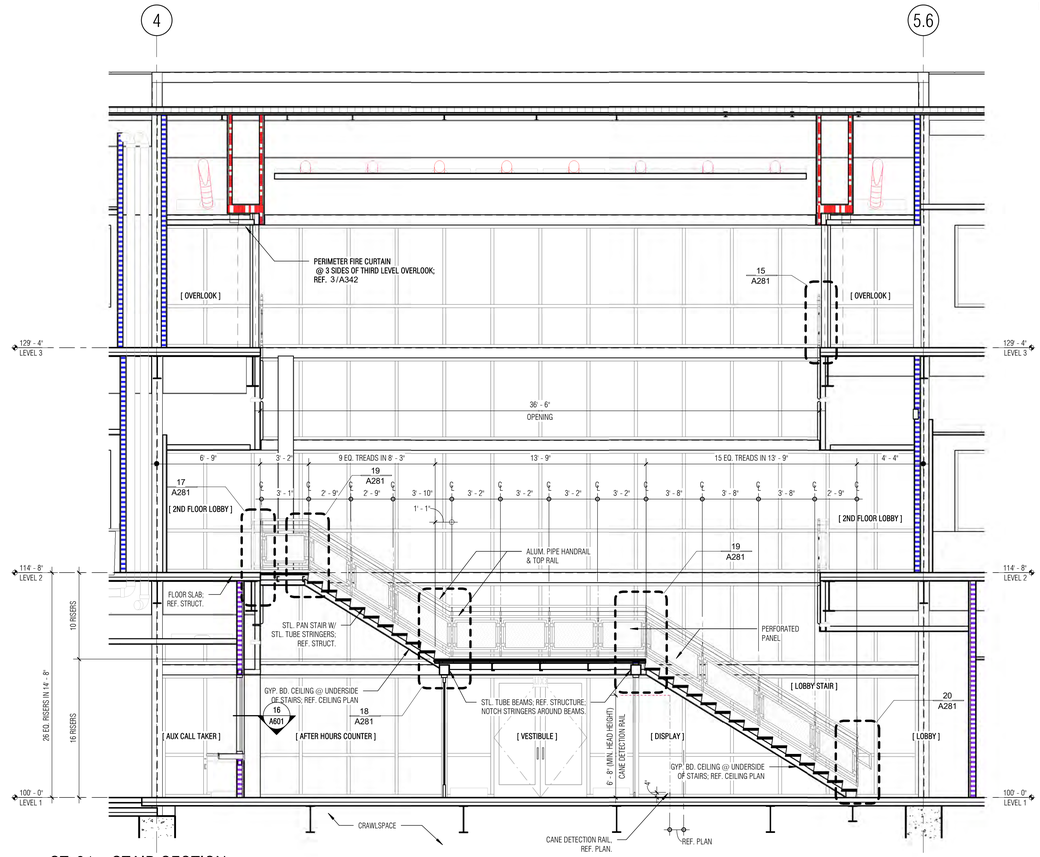

4 ST-01 - STAIR SECTION
SCALE: 1/4" = 1'-0"

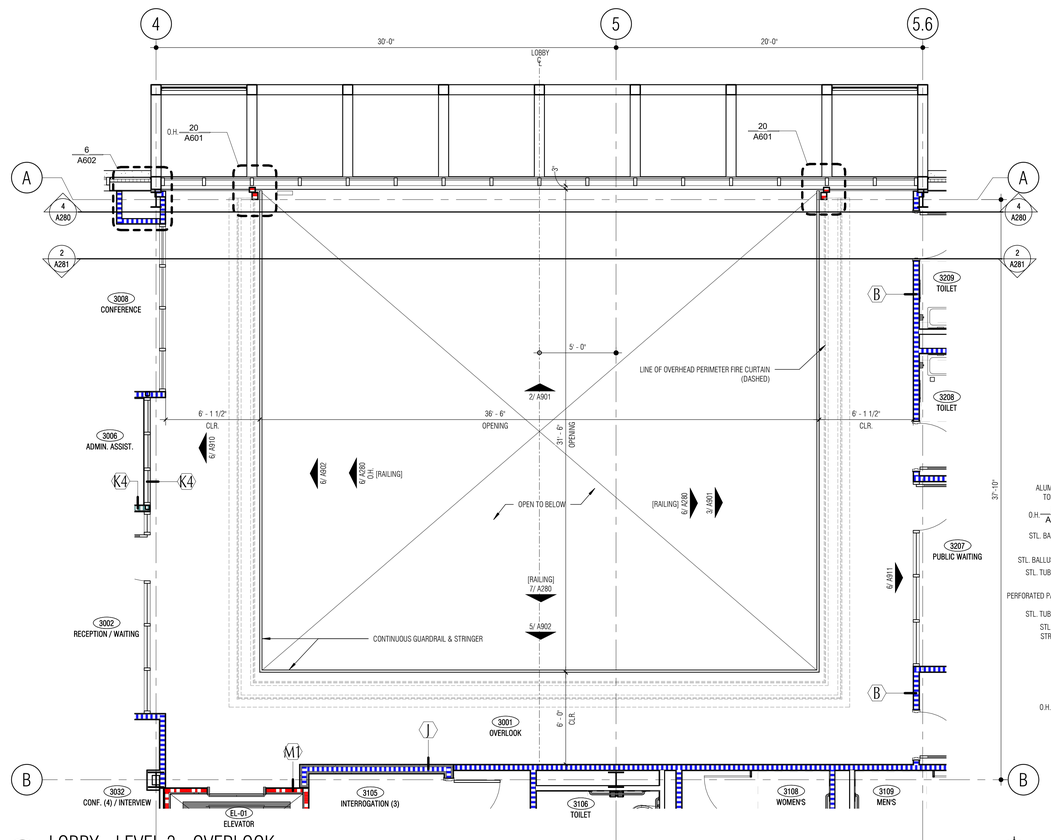

3 LOBBY - LEVEL 3 - OVERLOOK
SCALE: 1/4" = 1'-0"

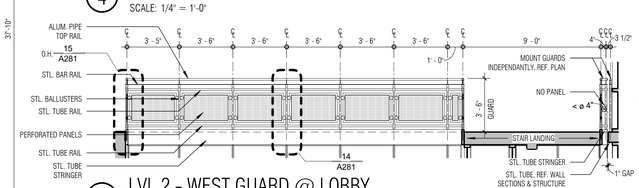

5 LVL 2 - WEST GUARD @ LOBBY
SCALE: 1/4" = 1'-0"

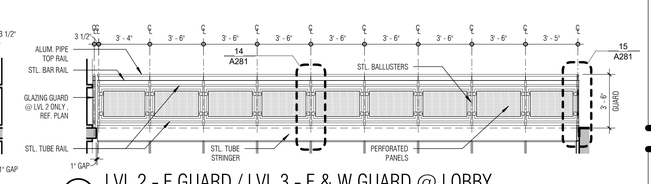

6 LVL 2 - E GUARD / LVL 3 - E & W GUARD @ LOBBY
SCALE: 1/4" = 1'-0"

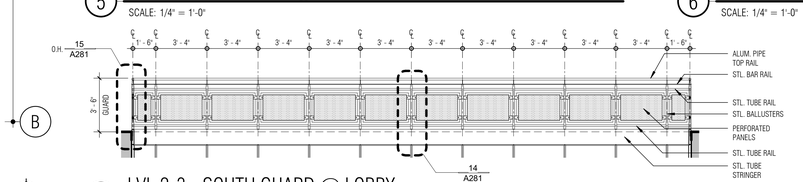

7 LVL 2-3 - SOUTH GUARD @ LOBBY
SCALE: 1/4" = 1'-0"

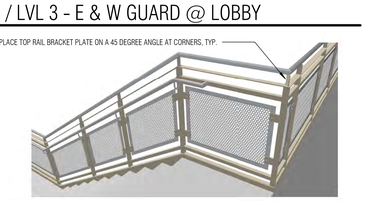

8 3D RAILING CORNER
SCALE:

Architect: Brinkley Sargent Wigginton Architects (972) 960-9970
Landscape: Kendall Landscape Architecture (214) 739-3226
Structural: L.A. Fuess Partners, Inc (214) 593-1118
MEP: M-E Engineers (214) 741-1589
Civil: KSA Engineers, Inc (903) 236-7700
Technology: M-E Engineers (303) 421-6656

BRINKLEY SARGENT WIGINTON ARCHITECTS

LONGVIEW POLICE DEPARTMENT

518 W. SOUTH ST. LONGVIEW, TEXAS 75601

HISTORY

#	DATE	DESCRIPTION

08/19/2020

STAIRS / RAILINGS - ST-01 & LOBBY

BID ISSUE

21719
08/19/2020
A280

© 2020 Brinkley Sargent Wiginton Architects, Inc.

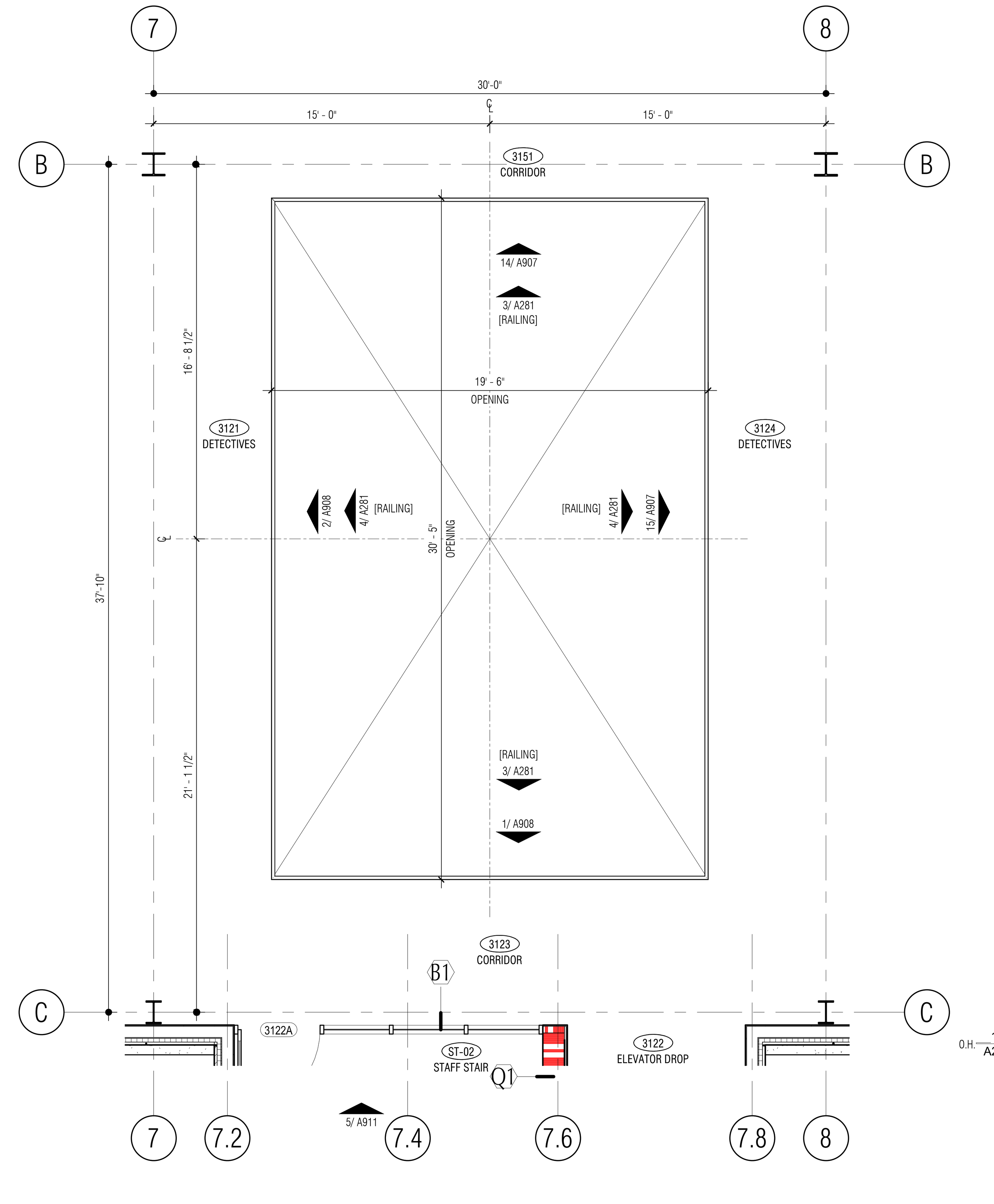

1 LEVEL 3 - CID OVERLOOK
SCALE: 1/4" = 1'-0"

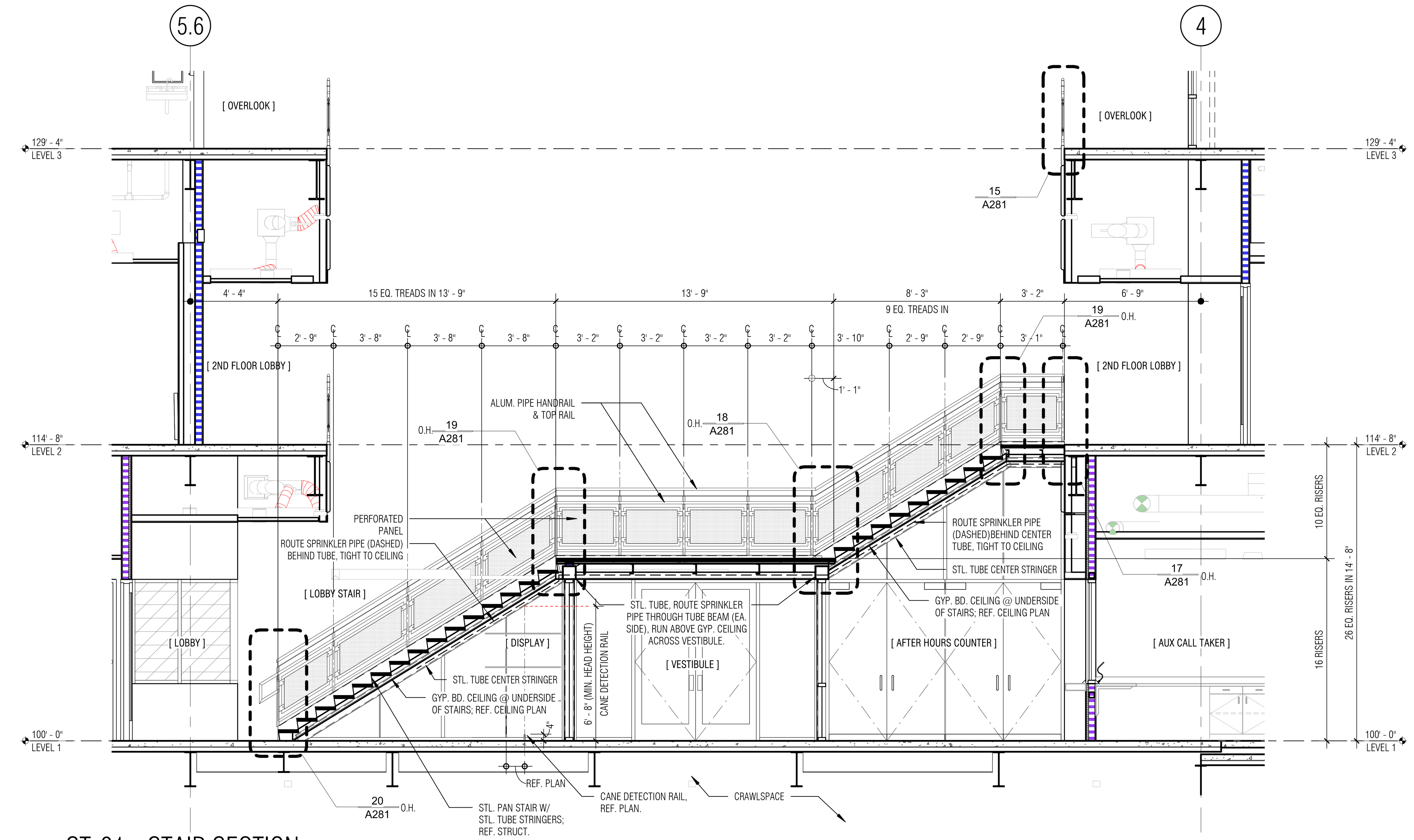

2 ST-01 - STAIR SECTION
SCALE: 1/4" = 1'-0"

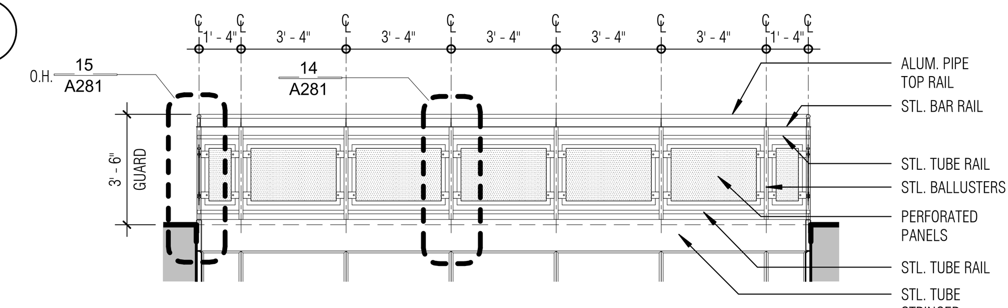

3 LEVEL 3 - NORTH & SOUTH GUARD @ CID
SCALE: 1/4" = 1'-0"

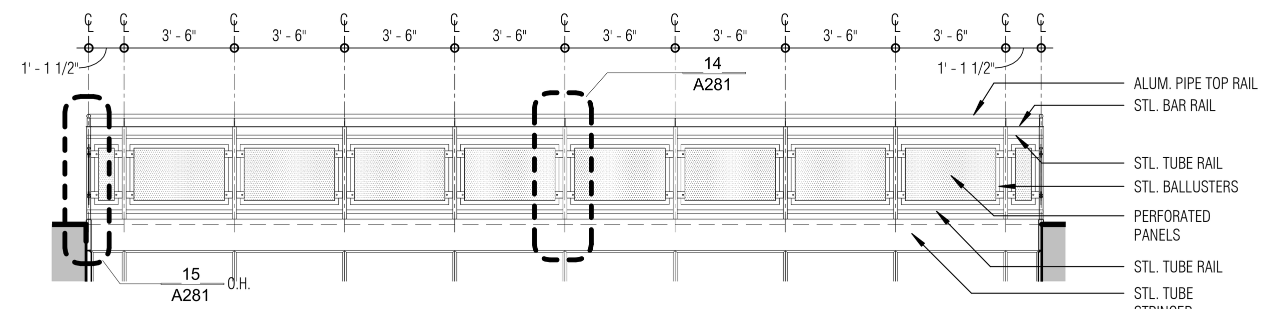

4 LEVEL 3 - EAST & WEST GUARD @ CID
SCALE: 1/4" = 1'-0"

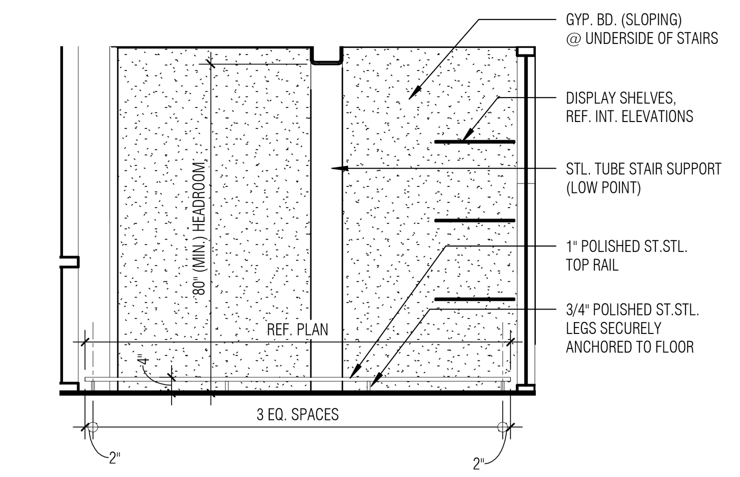

5 ELEVATION - CANE DETECTION RAIL
SCALE: 3/8" = 1'-0"

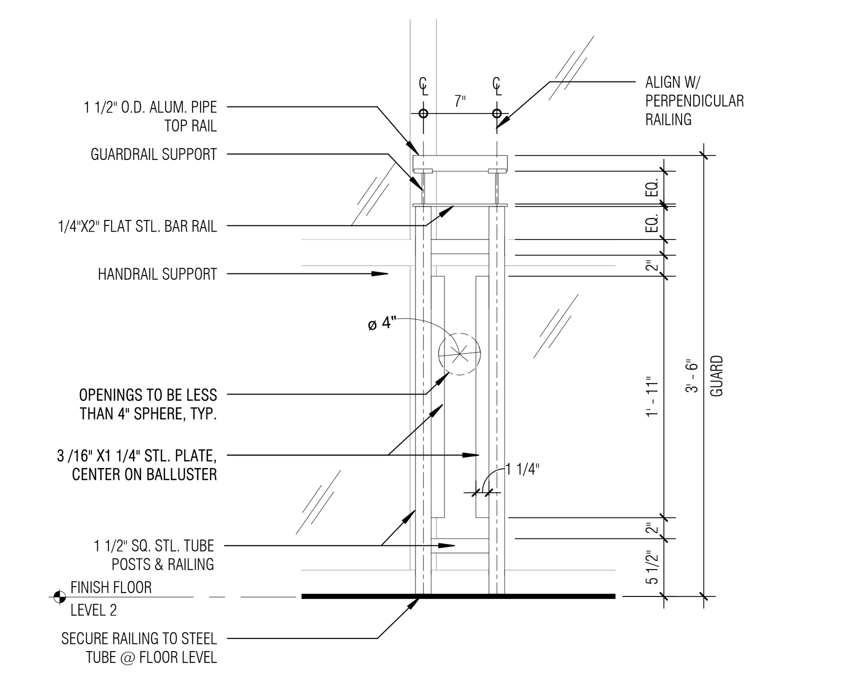

10 PERF. RAILING - GUARD AT GLAZING ELEVATION
SCALE: 1" = 1'-0"

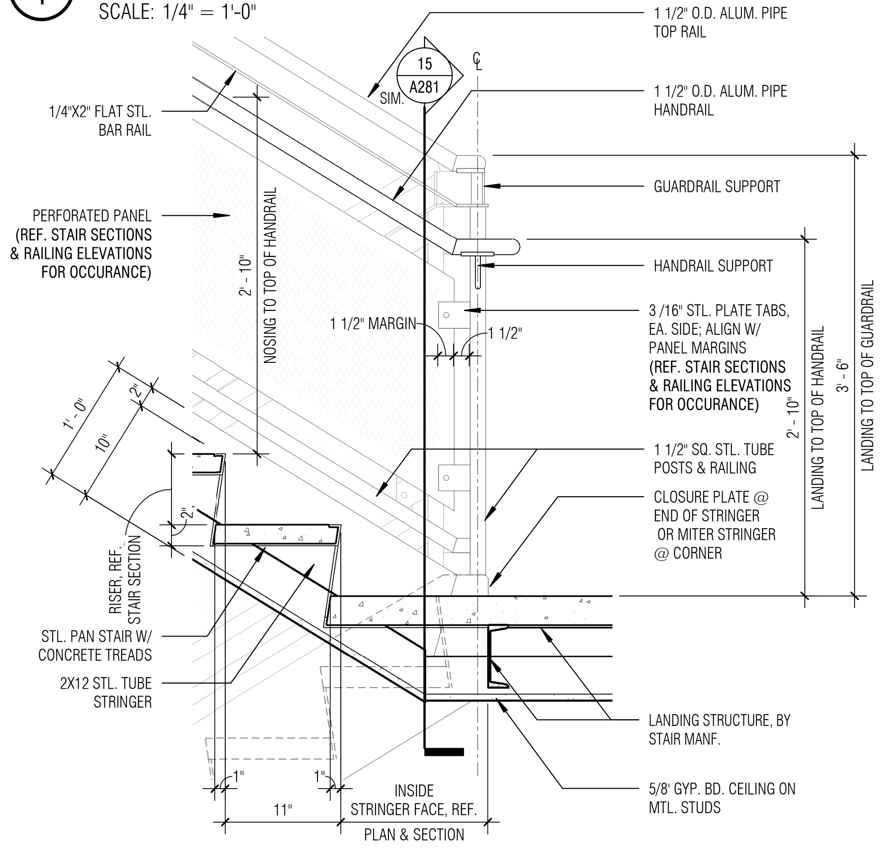

11 PERF. RALING - BASE NOSING @ SWITCHBACK
SCALE: 1" = 1'-0"

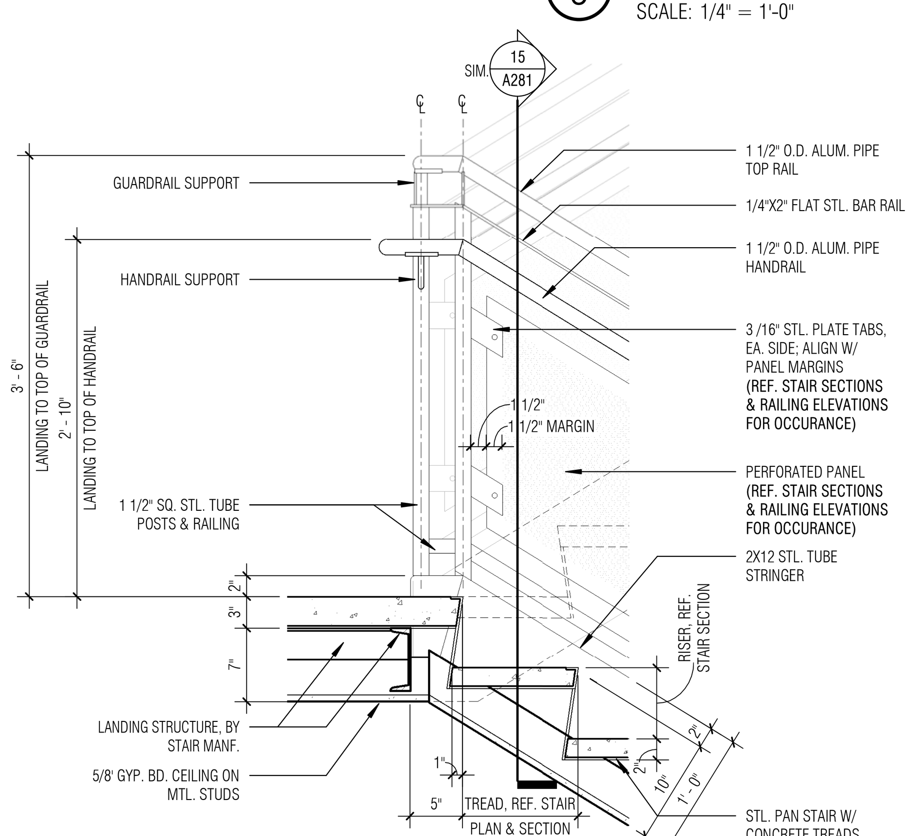

12 PERF. RALING - TOPE NOSING @ SWITCHBACK
SCALE: 1" = 1'-0"

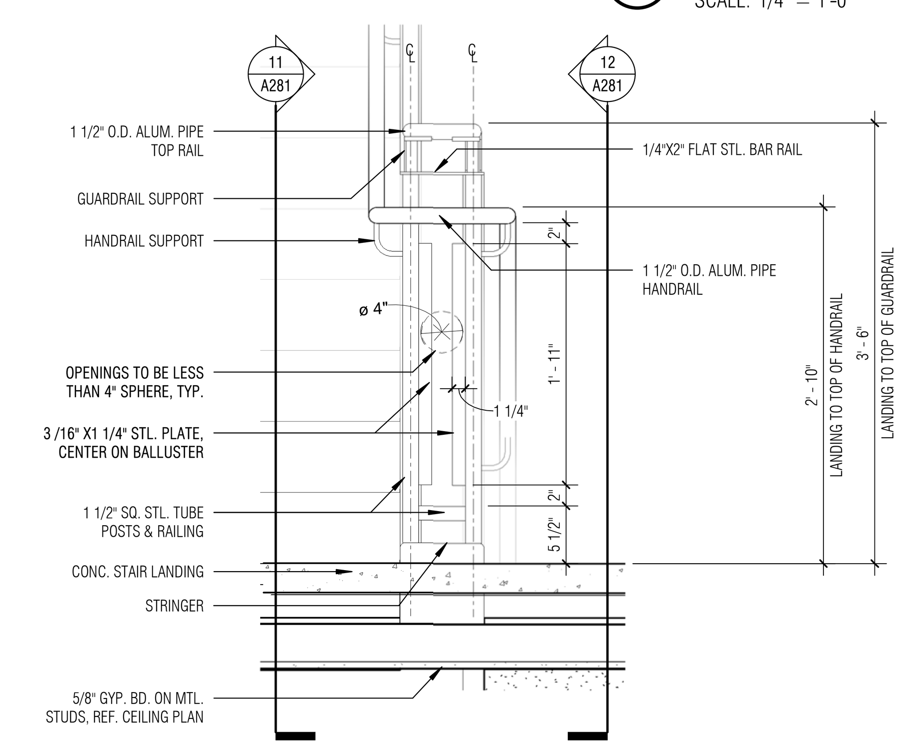

13 PERF. RAILING - TYPICAL SWITCHBACK ELEVATION
SCALE: 1" = 1'-0"

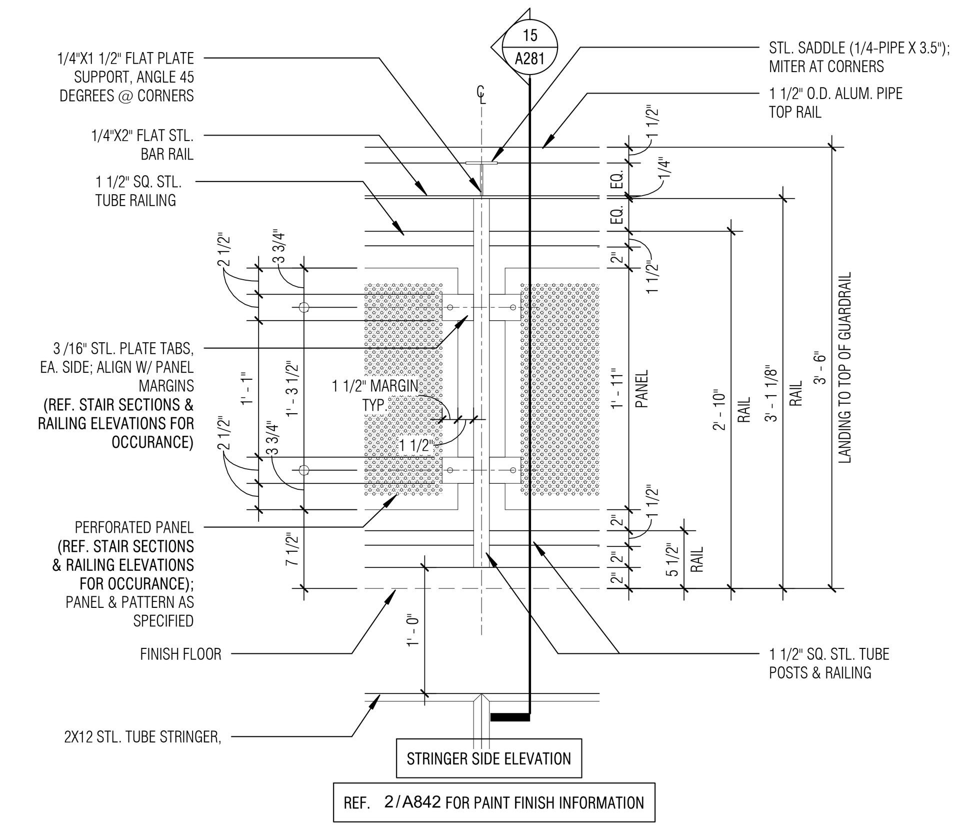

14 PERF. RAILING - TYPICAL GUARDRAIL ELEVATION
SCALE: 1" = 1'-0"

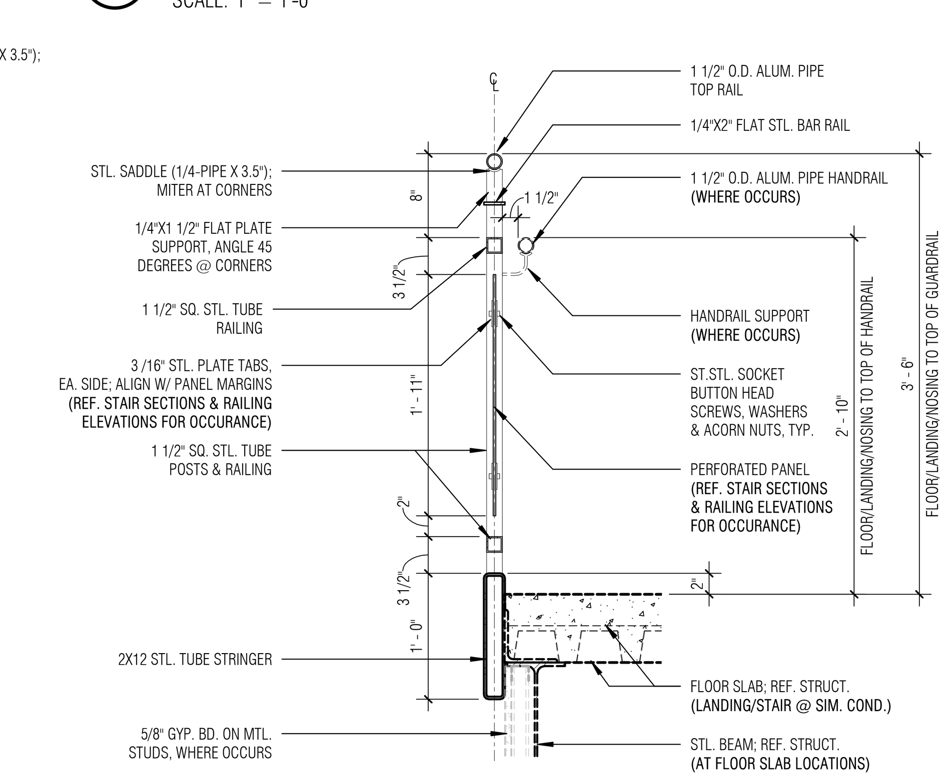

15 ST PERF RAIL - TYP GUARDRAIL SECTION
SCALE: 1" = 1'-0"

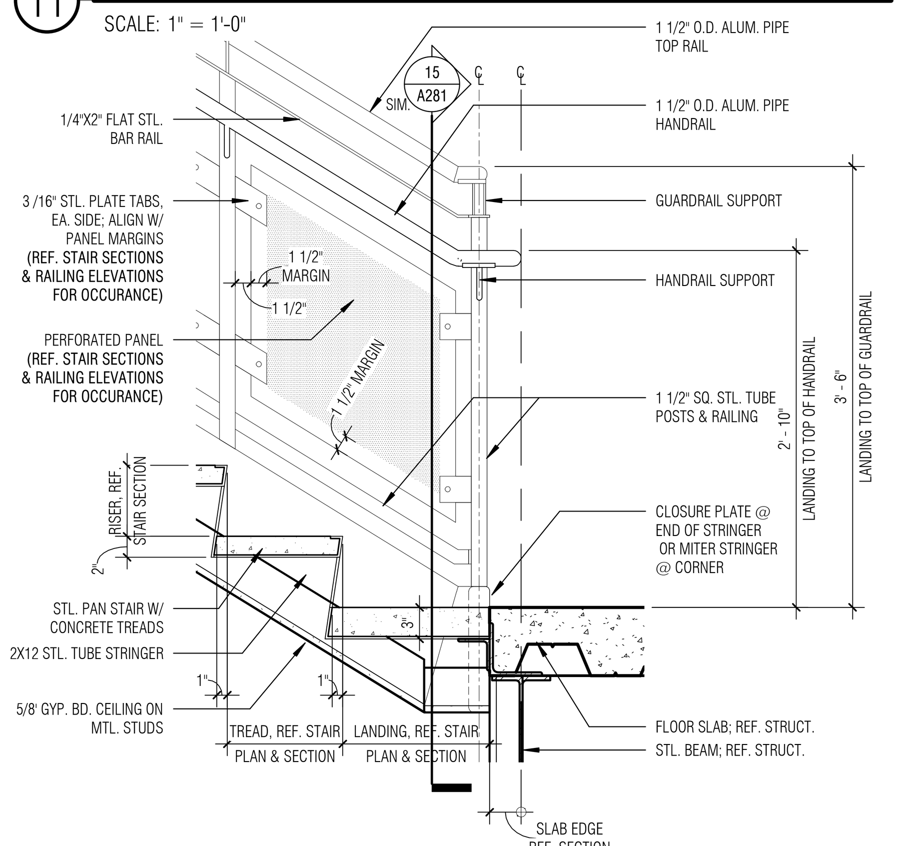

16 ST PERF RAIL -SLAB CONNECTION-BOTT NOSING
SCALE: 1" = 1'-0"

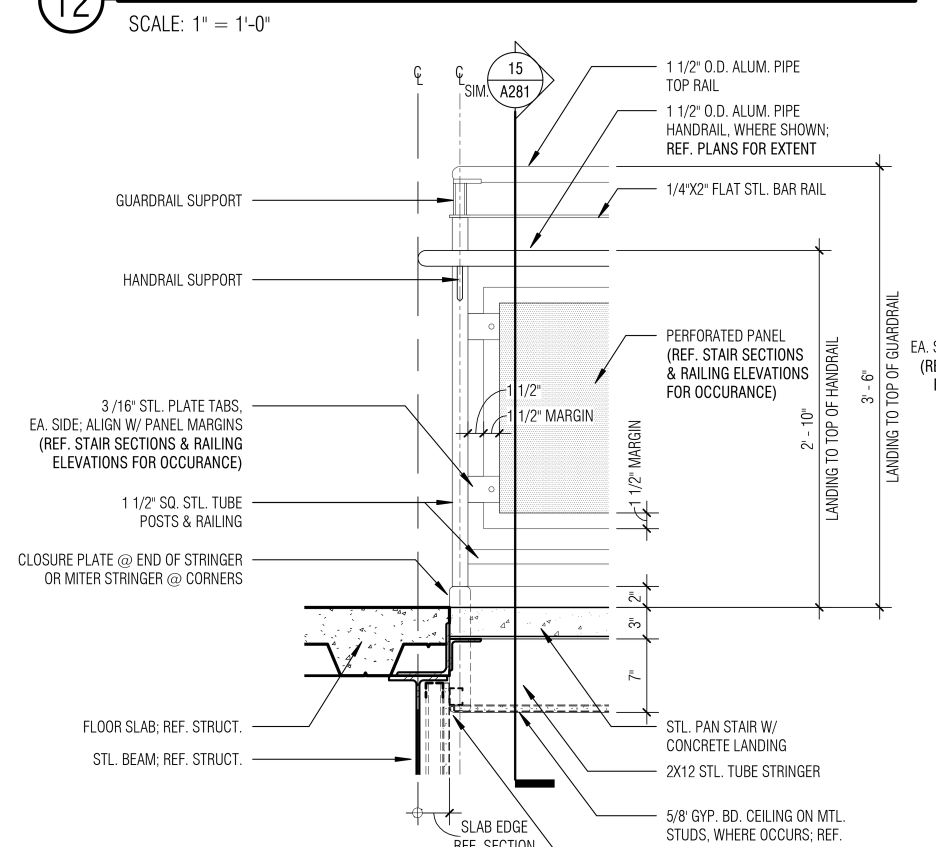

17 PERF. RAILING - SLAB CONNECTION @ LANDING
SCALE: 1" = 1'-0"

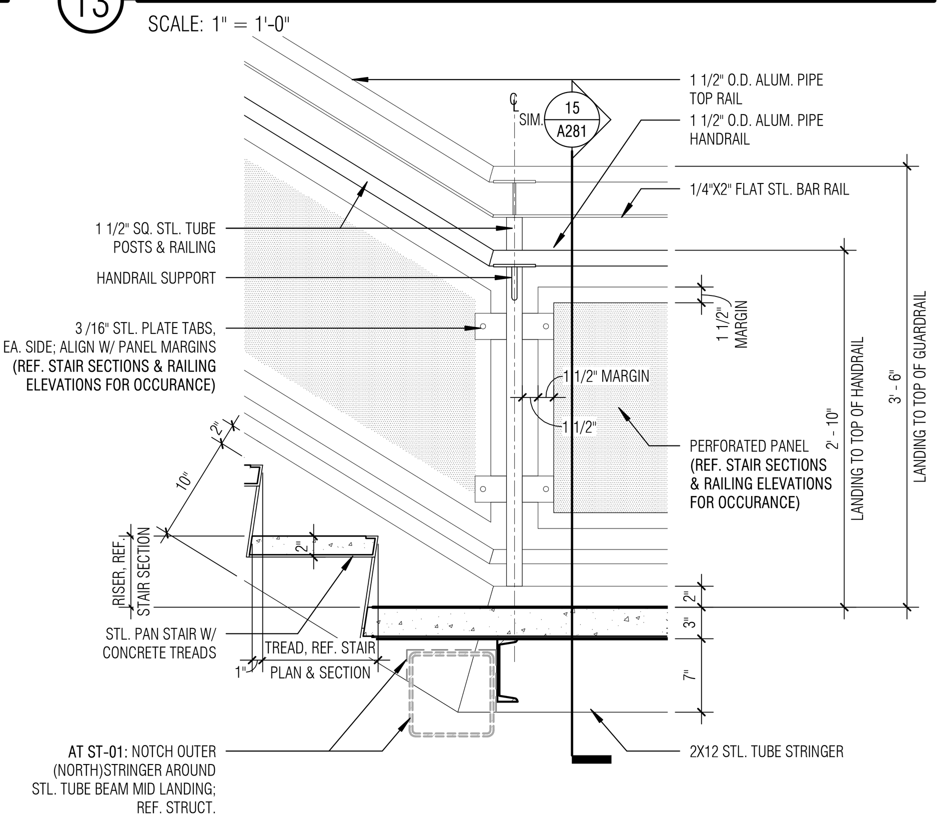

18 PERF. RAILING - BASE NOSING @ LANDING
SCALE: 1" = 1'-0"

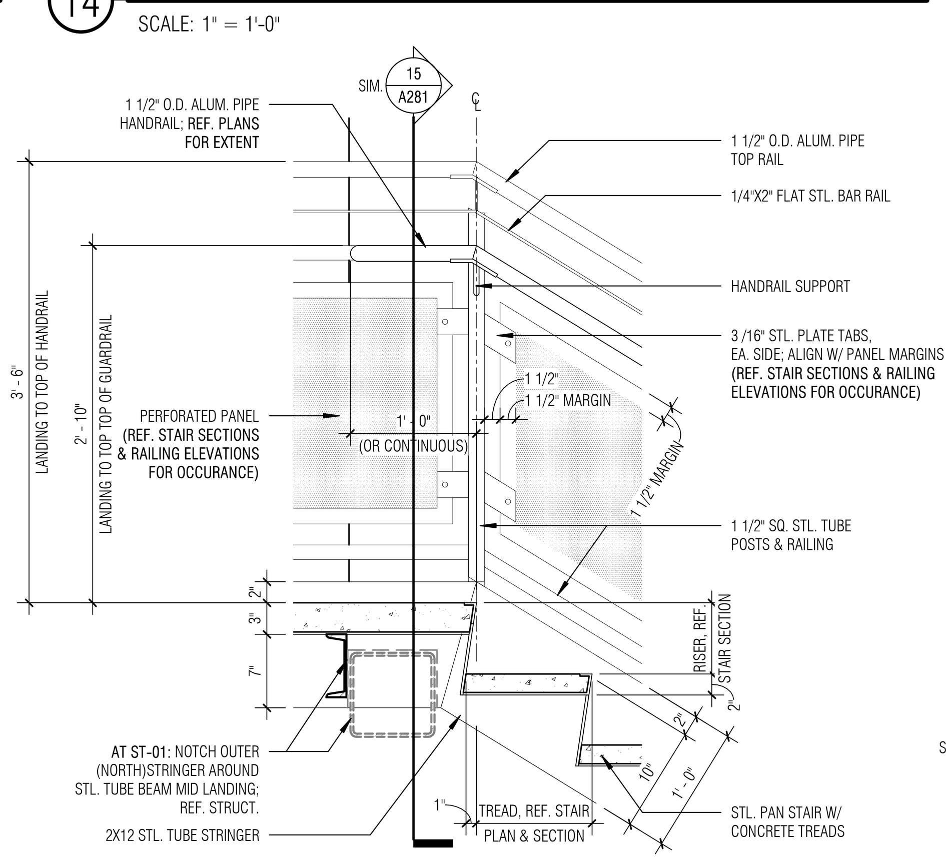

19 PERF. RAILING - UPPER NOSING @ LANDING
SCALE: 1" = 1'-0"

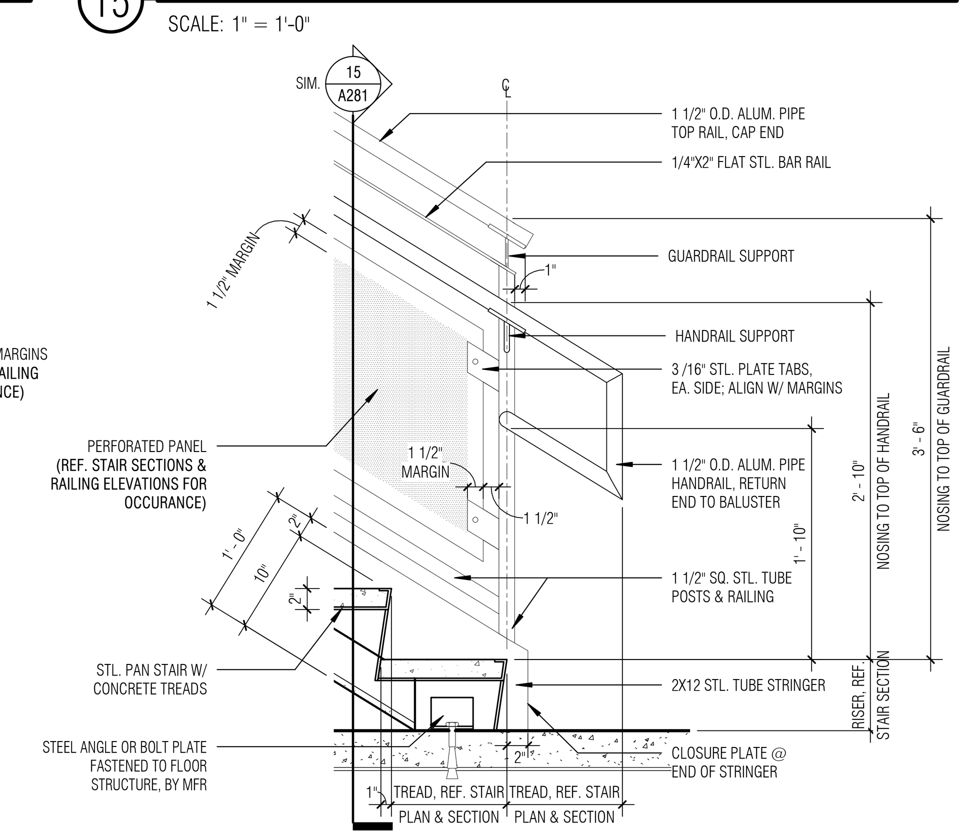

20 PERF. RAILING - BASE NOSING @ FLOOR
SCALE: 1" = 1'-0"

BRINKLEY SARGENT WIGINTON ARCHITECTS

Architect: Brinkley Sargent Wiginton Architects (972) 960-9970
Landscape: Kendall Landscape Architecture (214) 739-3226
Structural: L.A. Fuess Partners, Inc (214) 593-1118
MEP: M-E Engineers (214) 741-1589
Civil: KSA Engineers, Inc (903) 236-7700
Technology: M-E Engineers (303) 421-6656

LONGVIEW POLICE DEPARTMENT

518 W. SOUTH ST. LONGVIEW, TEXAS 75601

HISTORY

#	DATE	DESCRIPTION

REGISTERED ARCHITECT HAROLD E. SARGENT 9941 STATE OF TEXAS
08/19/2020

STAIRS / RAILINGS - ST-01, CID OVERLOOK & DETAILS

21719
08/19/2020
A281

BID ISSUE

D:\Revit Locals\LPD_CENTRAL_A19_bcocherer_08-18-2020.rvt
8/18/2020 1:28:40 PM

© 2020 Brinkley Sargent Wigginton Architects, Inc.

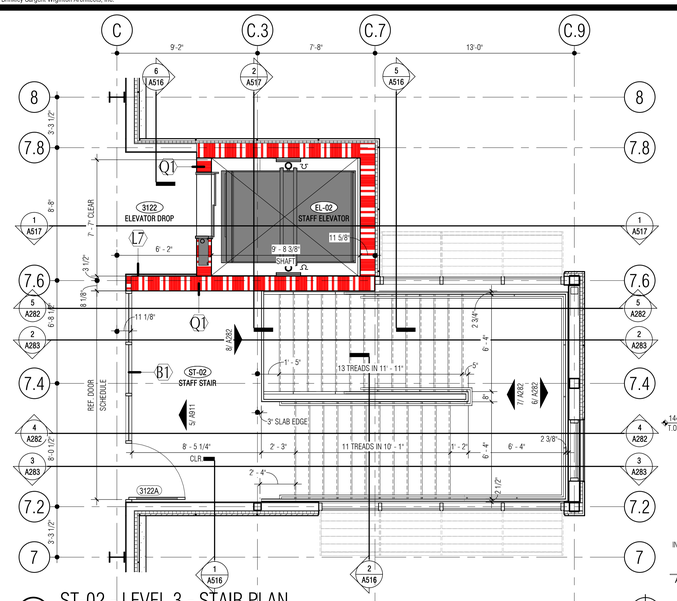

1 ST-02 - LEVEL 3 - STAIR PLAN

SCALE: 1/4" = 1'-0"

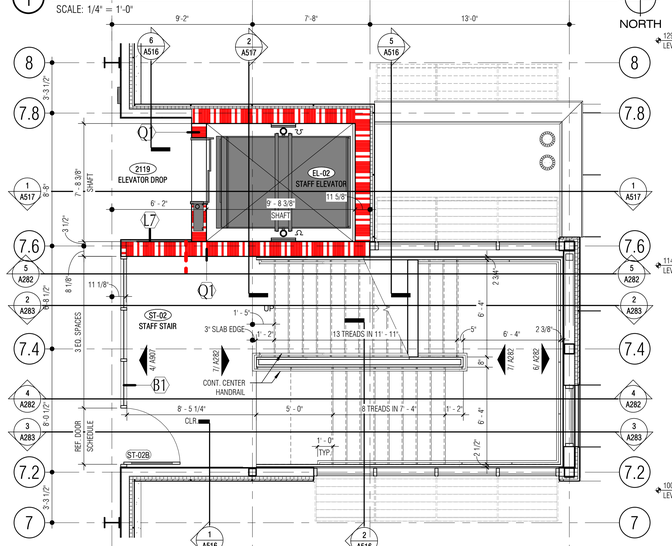

2 ST-02 - LEVEL 2 - STAIR PLAN

SCALE: 1/4" = 1'-0"

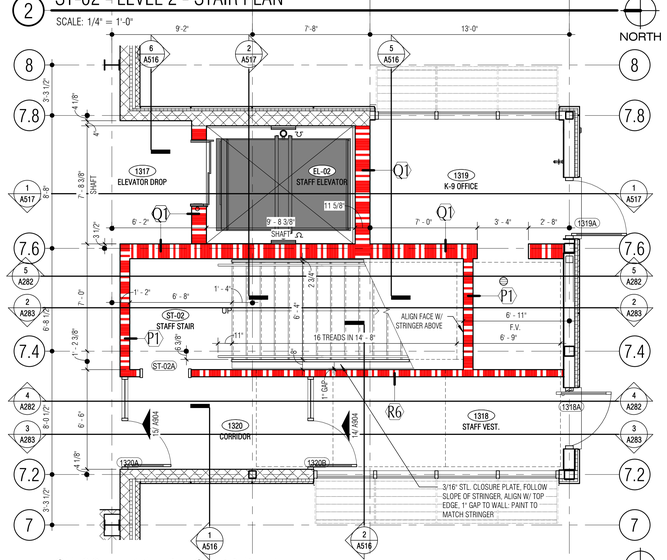

3 ST-02 - LEVEL 1 - STAIR PLAN

SCALE: 1/4" = 1'-0"

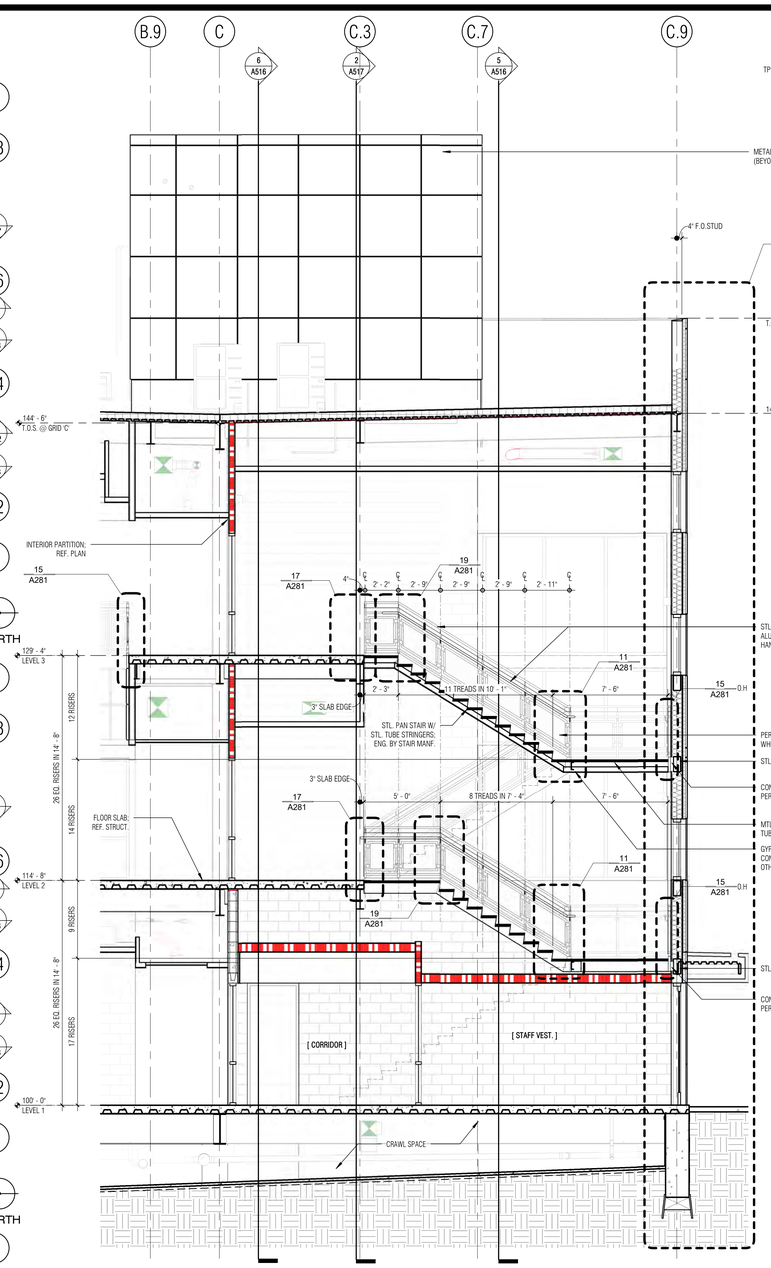

4 ST-02 - STAIR SECTION

SCALE: 1/4" = 1'-0"

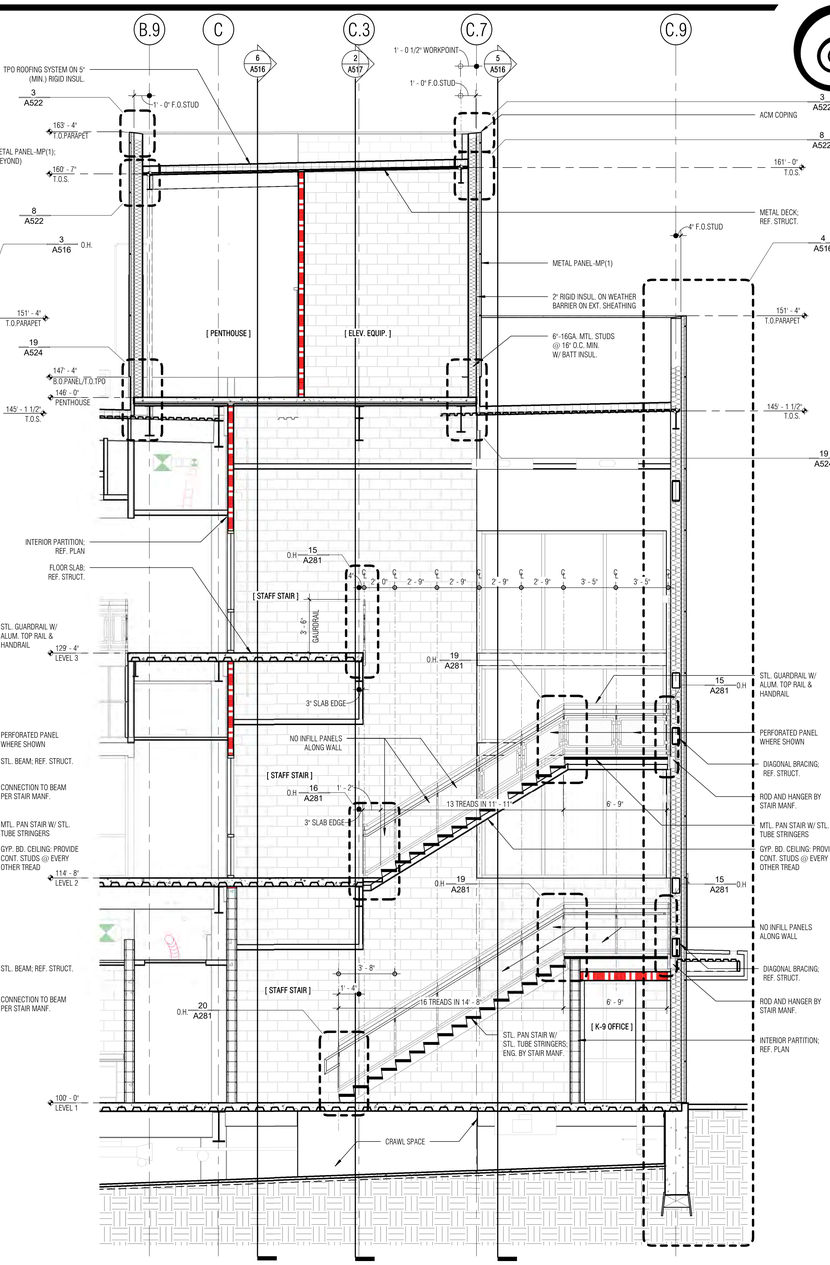

5 ST-02 - STAIR SECTION

SCALE: 1/4" = 1'-0"

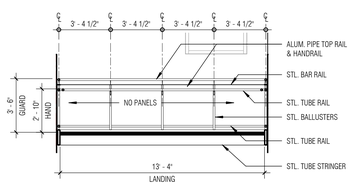

6 RAILING ELEVATION

SCALE: 1/4" = 1'-0"

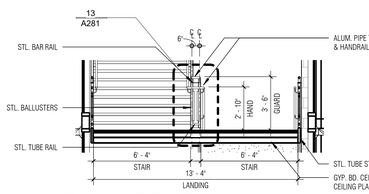

7 RAILING ELEVATION

SCALE: 1/4" = 1'-0"

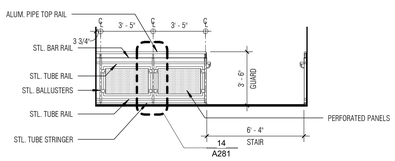

8 RAILING ELEVATION

SCALE: 1/4" = 1'-0"

LONGVIEW POLICE DEPARTMENT

518 W. SOUTH ST. LONGVIEW, TEXAS 75601

Architect: Brinkley Sargent Wigginton Architects (972) 960-9970
Landscape: Kendall Landscape Architecture (214) 739-3226
Structural: L.A. Fuess Partners, Inc (214) 593-1118
MEP: M-E Engineers (214) 741-1589
Civil: KSA Engineers, Inc (903) 236-7700
Technology: M-E Engineers (303) 421-6656

BRINKLEY SARGENT WIGINTON ARCHITECTS

HISTORY

#	DATE	DESCRIPTION

08/19/2020

STAIRS / RAILINGS - ST-02

21719
08/19/2020

A282

BID ISSUE

5/18/2020 1:29:55 PM

G:\Revit Local\LPD_CENTRAL_R19_Scanner_08-18-2020.rvt

© 2020 Brinkley Sargent Wigginton Architects, Inc.

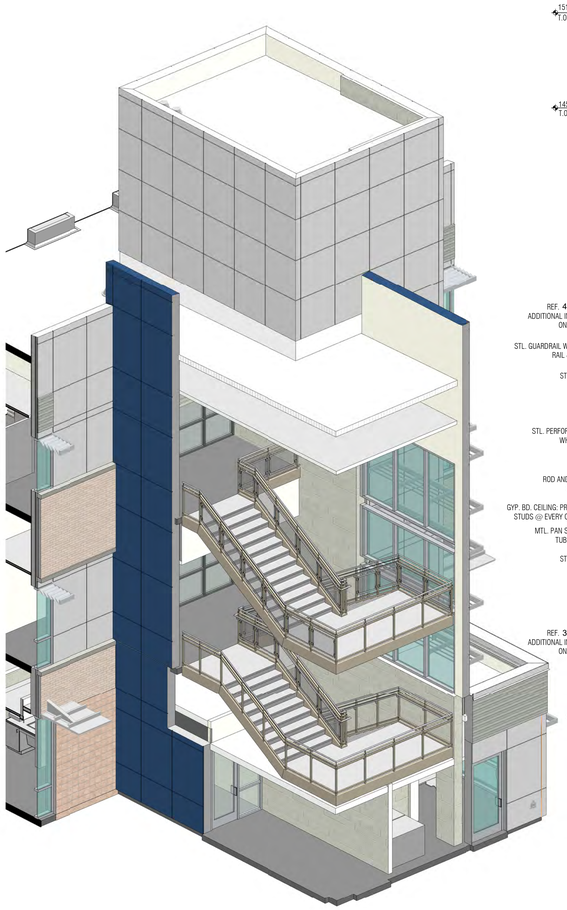

1 3D ST-02 -SECTION BOX AXONOMETRIC
SCALE:

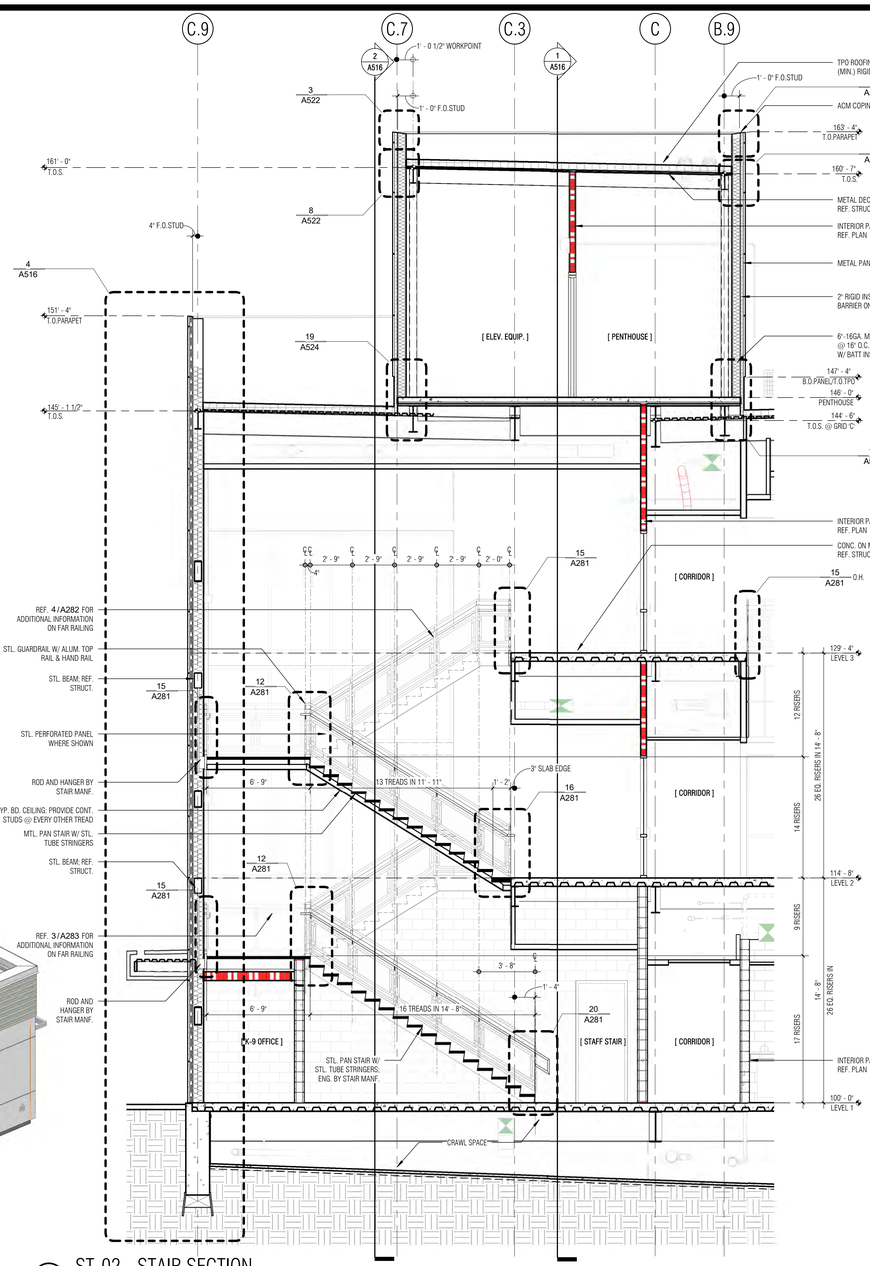

2 ST-02 - STAIR SECTION
SCALE: 1/4" = 1'-0"

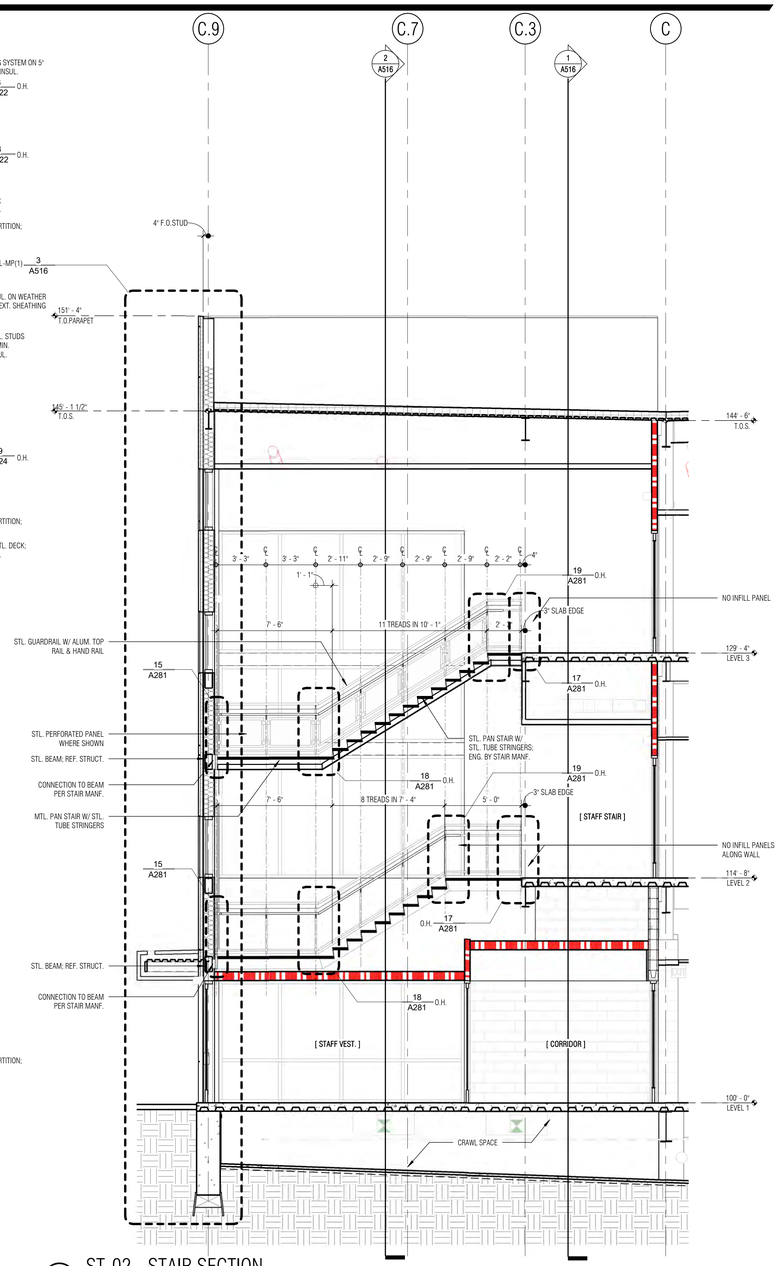

3 ST-02 - STAIR SECTION
SCALE: 1/4" = 1'-0"

4 3D ST-02 - LEVEL 2 MID-LANDING
SCALE: NTS

5 3D ST-02 - LEVEL 2 MID-LANDING
SCALE: NTS

6 3D ST-02 - LEVEL 2 LANDING
SCALE: NTS

7 3D ST-02 - LEVEL 1 MID-LANDING
SCALE: NTS

Architect: Brinkley Sargent Wigginton Architects (972) 960-9970
Landscape: Kendall Landscape Architecture (214) 739-3226
Structural: L.A. Fuess Partners, Inc (214) 593-1118
MEP: M-E Engineers (214) 741-1589
Civil: KSA Engineers, Inc (903) 236-7700
Technology: M-E Engineers (303) 421-6656

BRINKLEY SARGENT WIGINTON ARCHITECTS

LONGVIEW POLICE DEPARTMENT

518 W. SOUTH ST. LONGVIEW, TEXAS 75601

HISTORY		
#	DATE	DESCRIPTION

REGISTERED ARCHITECT — STATE OF TEXAS — 08/19/2020

STAIRS / RAILINGS - ST-02

21719
08/19/2020

A283

BID ISSUE

8/19/2020 1:32:59 PM

D:\Revit Local\LPD_CENTRAL_A19_Jeschner_08-19-2020.rvt

© 2020 Brinkley Sargent Wigginton Architects, Inc.

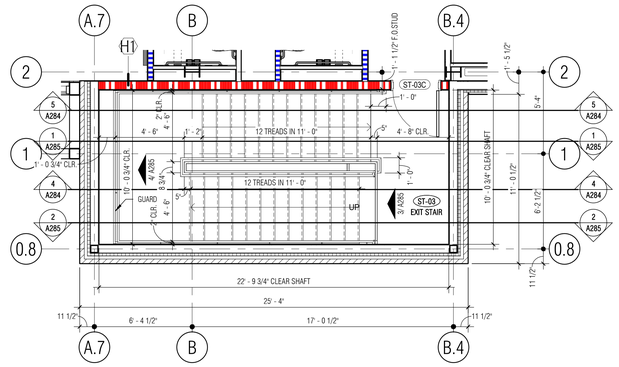

1 ST-03 - LEVEL 3 - STAIR PLAN

SCALE: 1/4" = 1'-0"

NORTH

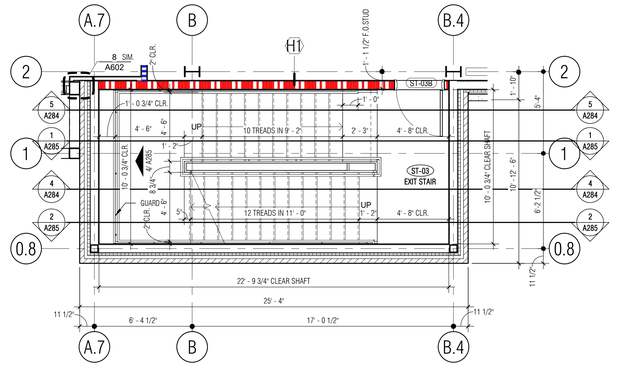

2 ST-03 - LEVEL 2 - STAIR PLAN

SCALE: 1/4" = 1'-0"

NORTH

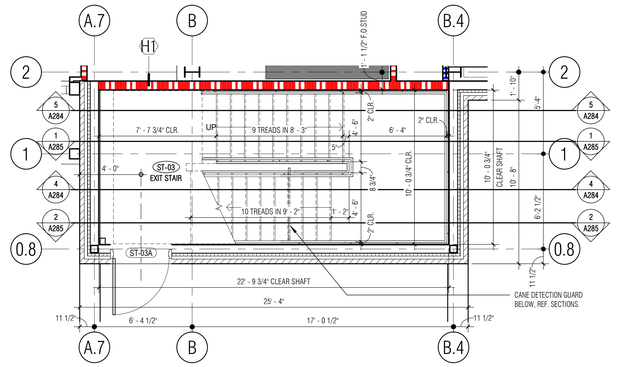

3 ST-03 - EXIT TO GRADE - STAIR PLAN

SCALE: 1/4" = 1'-0"

NORTH

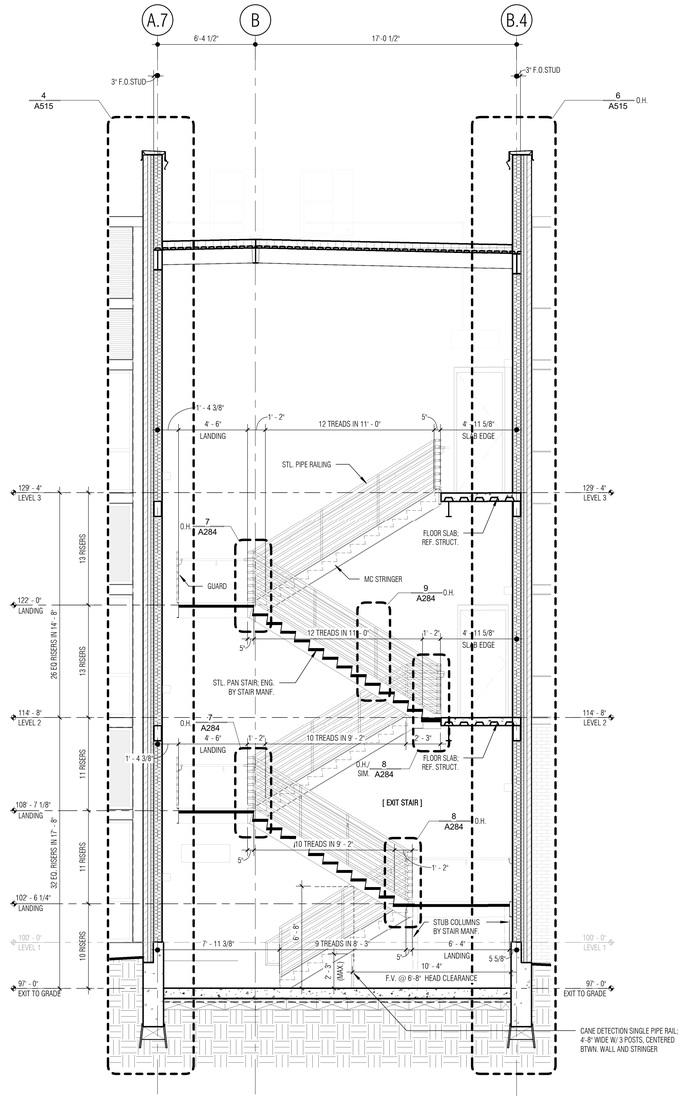

4 ST-03 - STAIR SECTION

SCALE: 1/4" = 1'-0"

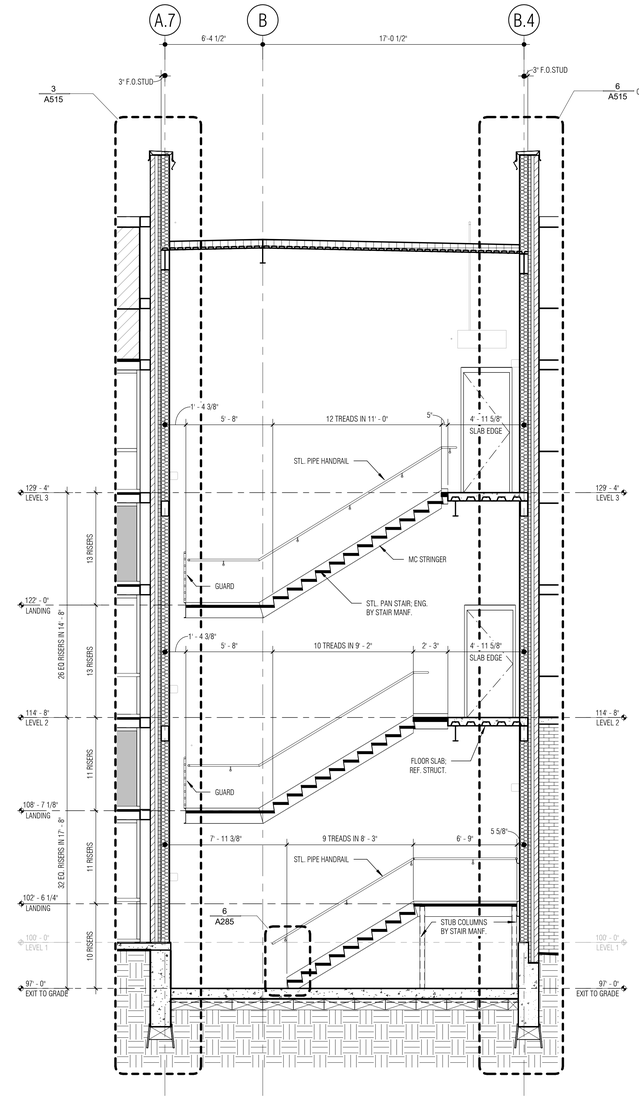

5 ST-03 - STAIR SECTION

SCALE: 1/4" = 1'-0"

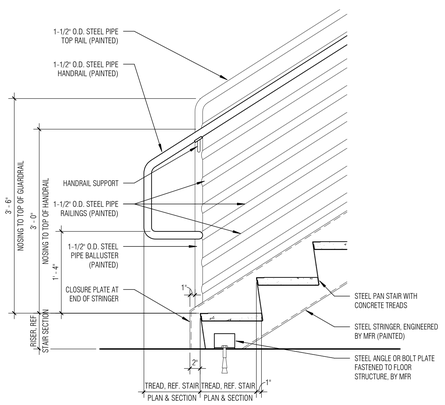

6 PIPE RAILING - BASE LANDING

SCALE: 1" = 1'-0"

FOR ADDITIONAL INFORMATION REFERENCE: 9/A284

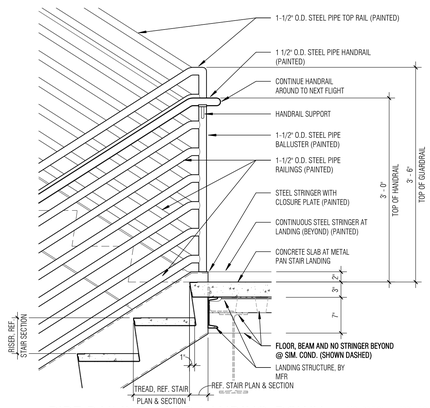

7 PIPE RAILING - MID LANDING-DOWN

SCALE: 1" = 1'-0"

FOR ADDITIONAL INFORMATION REFERENCE: 9/A284

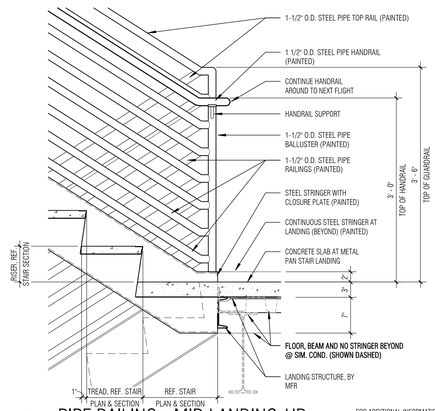

8 PIPE RAILING - MID LANDING-UP

SCALE: 1" = 1'-0"

FOR ADDITIONAL INFORMATION REFERENCE: 9/A284

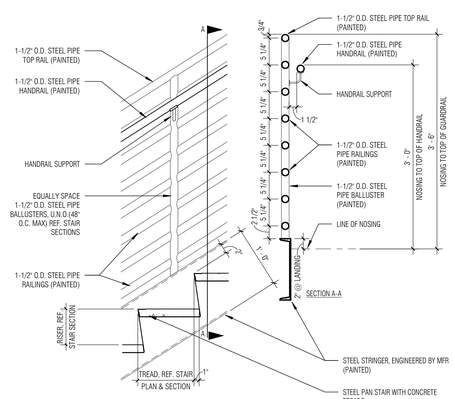

9 TYPICAL PIPE RAILING

SCALE: 1" = 1'-0"

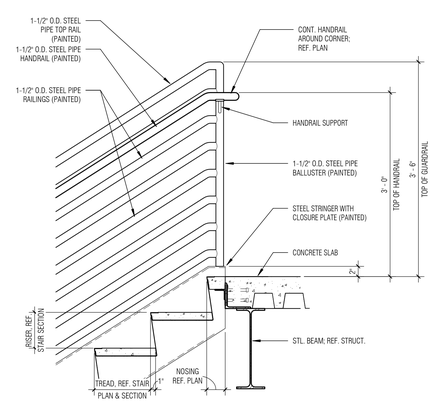

10 PIPE RAILING - TOP LANDING

SCALE: 1" = 1'-0"

FOR ADDITIONAL INFORMATION REFERENCE: 9/A284

Architect: Brinkley Sargent Wigginton Architects (972) 960-9970
Landscape: Kendall Landscape Architecture (214) 739-3226
Structural: L.A. Fuess Partners, Inc (214) 593-1118
MEP: M-E Engineers (214) 741-1589
Civil: KSA Engineers, Inc (903) 236-7700
Technology: M-E Engineers (303) 421-6656

BRINKLEY SARGENT WIGINTON ARCHITECTS

LONGVIEW POLICE DEPARTMENT

518 W. SOUTH ST. LONGVIEW, TEXAS 75601

HISTORY

#	DATE	DESCRIPTION

REGISTERED ARCHITECT STATE OF TEXAS 9941 08/19/2020

STAIRS / RAILINGS - ST-03 & DETAILS

21719

08/19/2020

A284

BID ISSUE

6/15/2020 1:34:06 PM

D:\Revit Local\LPD_CENTRAL_v19_boonmee_QR-18-2020.rvt

© 2020 Brinkley Sargent Wigginton Architects, Inc.

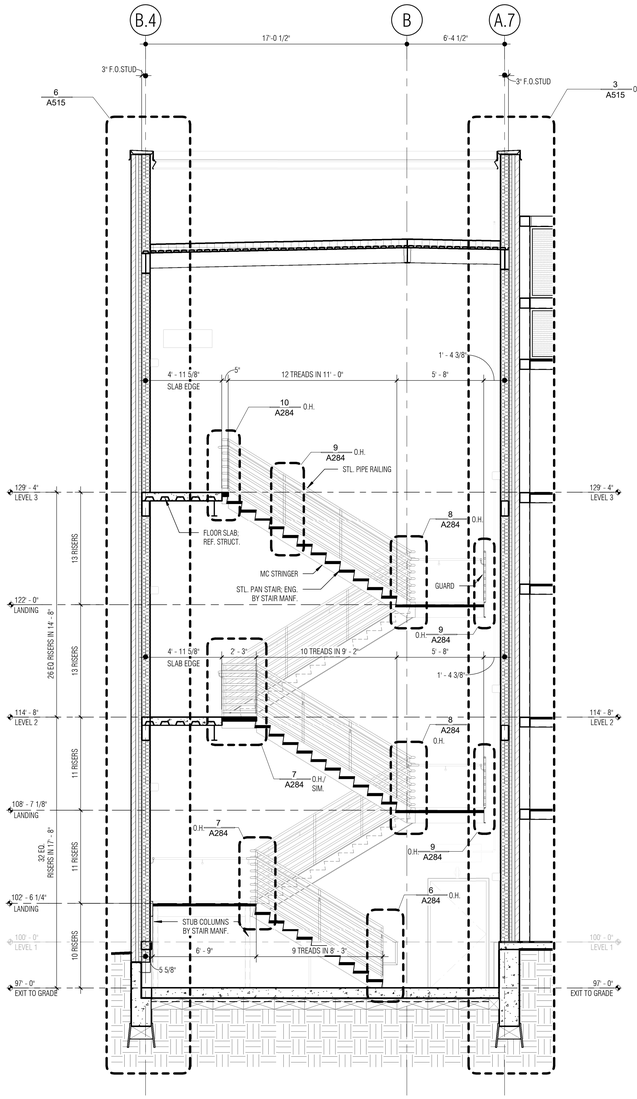

1 ST-03 - STAIR SECTION

SCALE: 1/4" = 1'-0"

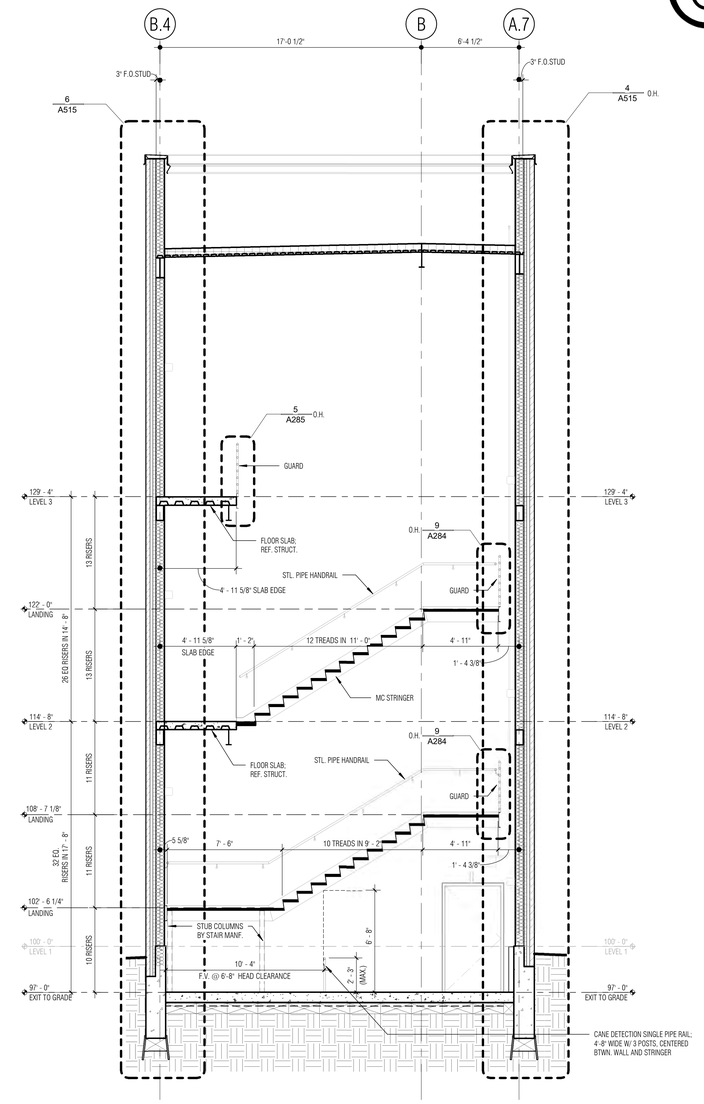

2 ST-03 - STAIR SECTION

SCALE: 1/4" = 1'-0"

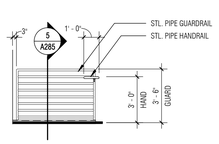

3 LVL 3 - GUARD ELEVATION

SCALE: 1/4" = 1'-0"

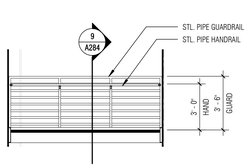

4 GUARD ELEVATION

SCALE: 1/4" = 1'-0"

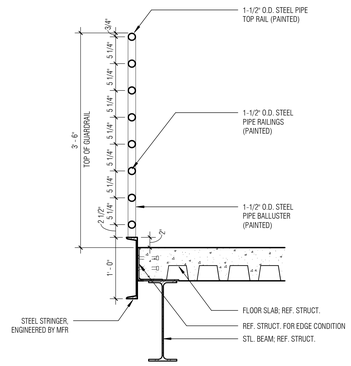

5 TYPICAL PIPE GUARD SECTION

SCALE: 1" = 1'-0"

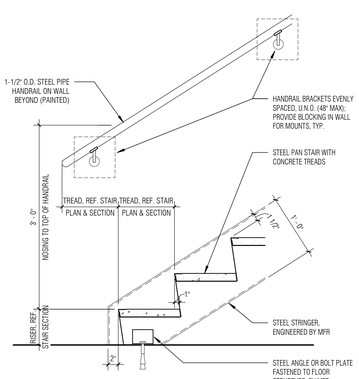

6 ST_TYP WALL RAIL_BASE LANDING

SCALE: 1" = 1'-0"

LONGVIEW POLICE DEPARTMENT

518 W. SOUTH ST. LONGVIEW, TEXAS 75601

Architect: Brinkley Sargent Wigginton Architects (972) 960-9970
Landscape: Kendall Landscape Architecture (214) 739-3226
Structural: L.A. Fuess Partners, Inc (214) 593-1118
MEP: M-E Engineers (214) 741-1589
Civil: KSA Engineers, Inc (903) 236-7700
Technology: M-E Engineers (303) 421-6656

BRINKLEY SARGENT WIGINTON ARCHITECTS

HISTORY

#	DATE	DESCRIPTION

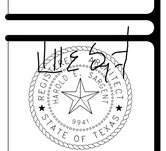

STAIRS / RAILINGS - ST-03 & DETAILS

21719

08/19/2020

A285

BID ISSUE

D:\Revit Locals\LPD_CENTRAL_x19_boonmeer_08-18-2020.rvt 8/19/2020 1:35:03 PM

© 2020 Brinkley Sargent Wigginton Architects, Inc.

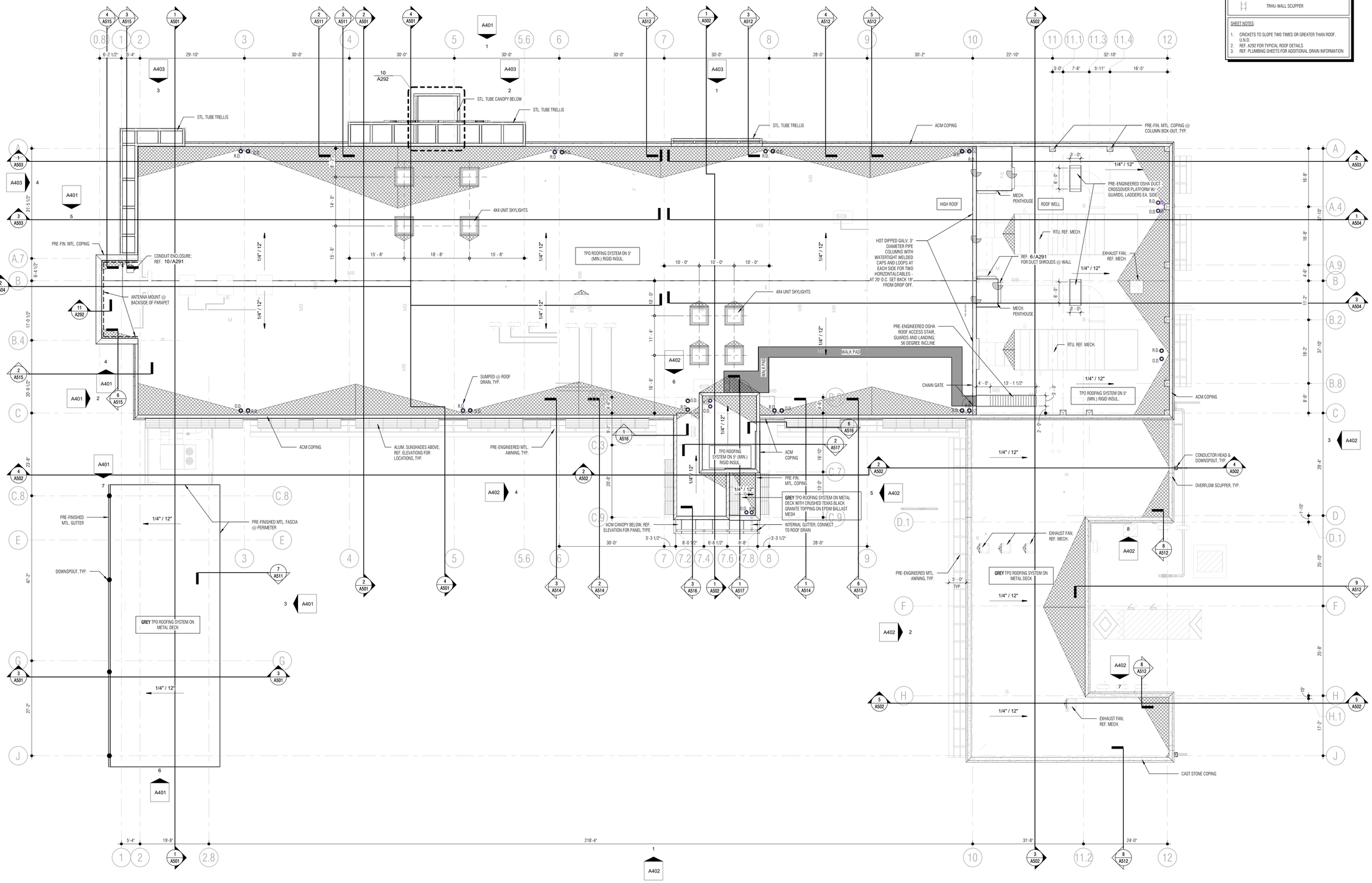

1 ROOF PLAN

SCALE: 3/32" = 1'-0"

ROOF LEGEND

- ROOF SLOPE
- CRICKET
- R.D. ROOF DRAIN, SUMP 2"
- O.D. OVERFLOW DRAIN
- DOWNSPOUT FROM GUTTER
- SCUPPER, CONDUCTOR HEAD & DOWNSPOUT
- TRHU-WALL SCUPPER

SHEET NOTES:

1. CRICKETS TO SLOPE TWO TIMES OR GREATER THAN ROOF, U.N.O.
2. REF. A292 FOR TYPICAL ROOF DETAILS
3. REF. PLUMBING SHEETS FOR ADDITIONAL DRAIN INFORMATION

Architect: Brinkley Sargent Wigginton Architects (972) 960-9970
Landscape: Kendall Landscape Architecture (214) 739-3226
Structural: L.A. Fuess Partners, Inc (214) 593-1118
MEP: M-E Engineers (214) 741-1589
Civil: KSA Engineers, Inc (903) 236-7700
Technology: M-E Engineers (303) 421-6656

BRINKLEY SARGENT WIGINTON ARCHITECTS

LONGVIEW POLICE DEPARTMENT

518 W. SOUTH ST. LONGVIEW, TEXAS 75601

HISTORY		
#	DATE	DESCRIPTION

REGISTERED ARCHITECT STATE OF TEXAS 9941 08/19/2020

ROOF PLAN

21719
08/19/2020

A290

BID ISSUE

8/21/2020 4:33:57 PM

D:\Revit Local\LPD_CENTRAL_A19_jbrosgomez.rvt

© 2020 Brinkley Sargent Wigginton Architects, Inc.

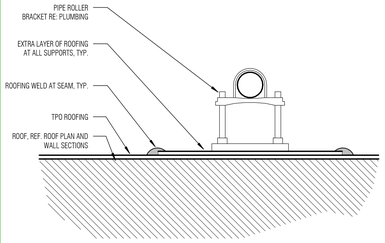

1 RF_TYP_PIPE SUPPORT
SCALE: 3" = 1'-0"

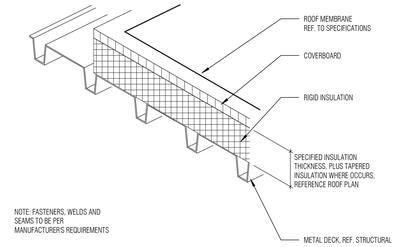

2 RF_DECK_TPO-TYP
SCALE: 1" = 1'-0"

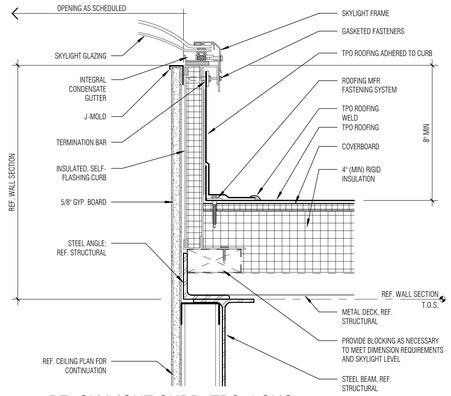

3 RF_SKYLIGHT CURB_TPO_LONG
SCALE: 3" = 1'-0"

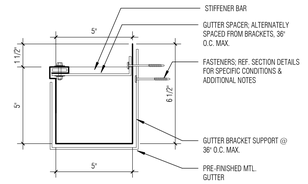

4 RF_GUTTER
SCALE: 3" = 1'-0"

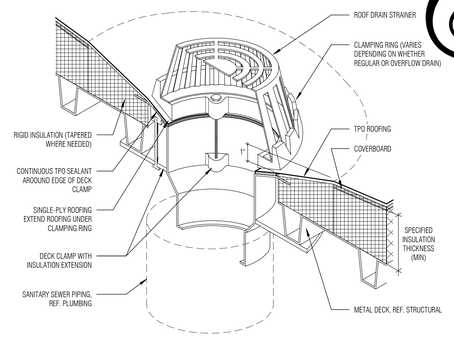

5 RF_DECK_DRAIN_TPO_AXON
SCALE: 1 1/2" = 1'-0"

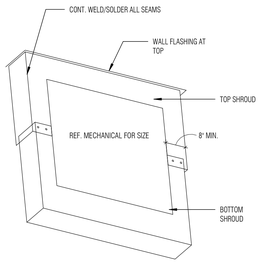

TYPICAL WALL DUCT PENETRATION SHROUD AT EXT. WALL

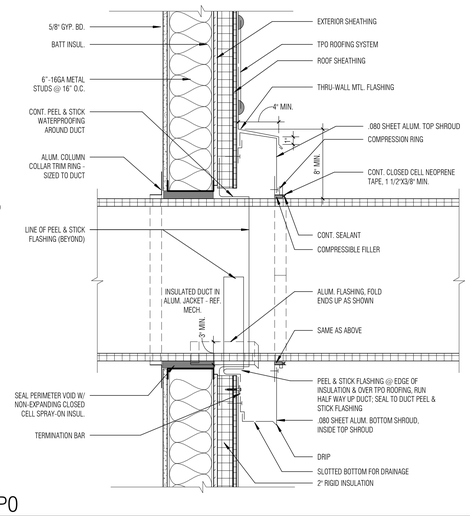

6 RF_SHROUD THRU MTLS_RECT @ TPO
SCALE: 1 1/2" = 1'-0"

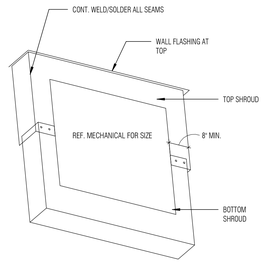

TYPICAL WALL DUCT PENETRATION SHROUD AT EXT. WALL

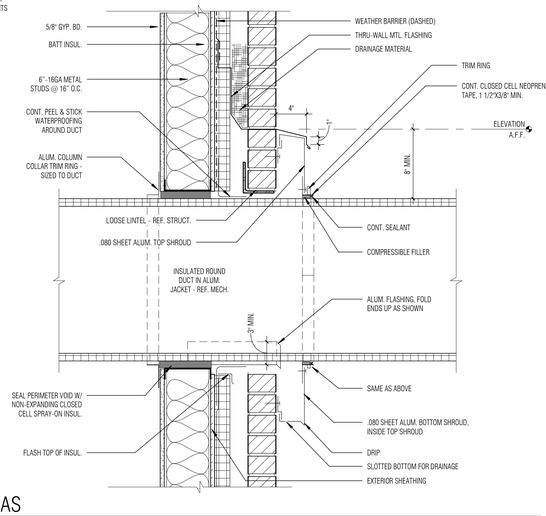

8 RF_SHROUD THRU MTLS_RECT @ MAS
SCALE: 1 1/2" = 1'-0"

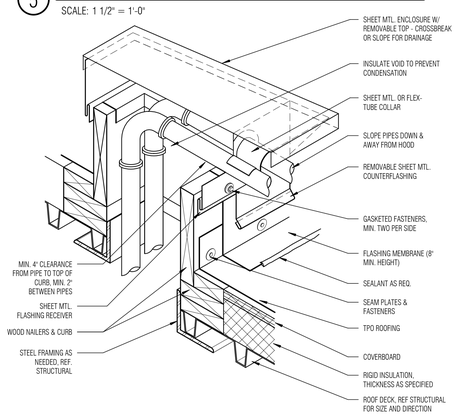

10 RF_DECK_PIPING ENCLOSURE_TPO
SCALE: 1" = 1'-0"

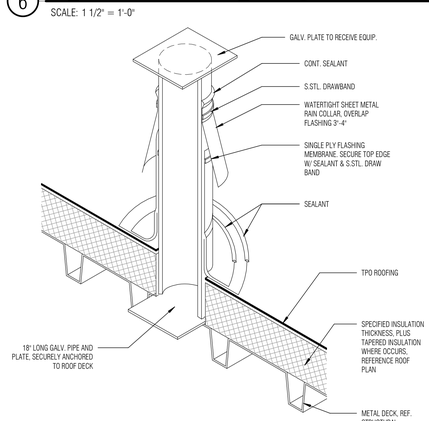

12 RF_DECK_EQUIP-SUPPORT_TPO
SCALE: 1 1/2" = 1'-0"

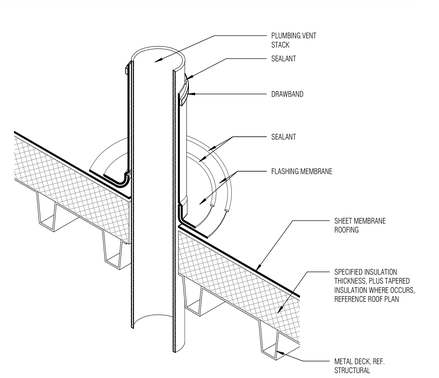

13 RF_DECK_ROOF-VENT_TPO
SCALE: 1 1/2" = 1'-0"

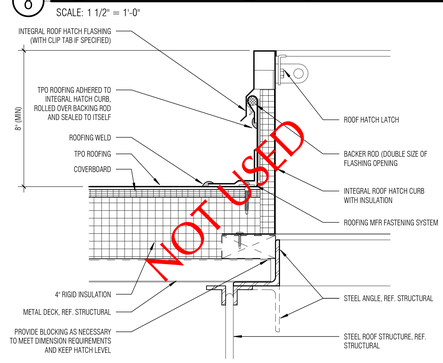

14 RF_DECK_ROOF HATCH_TPO
SCALE: 3" = 1'-0"

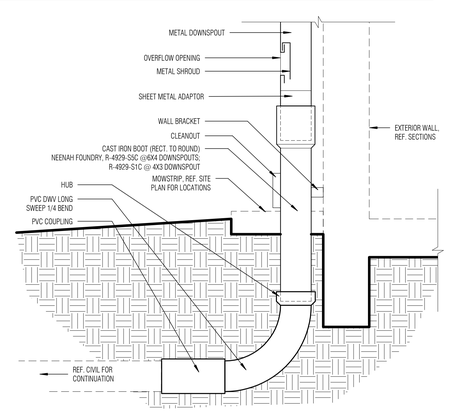

15 RF_DOWNSPOUT BOOT DETAIL
SCALE: 1 1/2" = 1'-0"

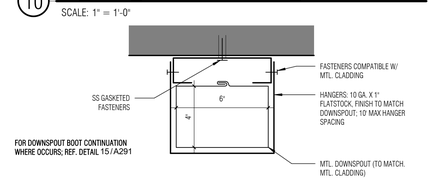

16 RF_DOWNSPOUT DETAIL_RECT
SCALE: 3" = 1'-0"

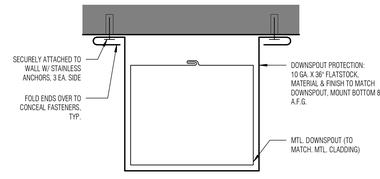

17 RF_DOWNSPOUT PROTECTION_RECT
SCALE: 3" = 1'-0"

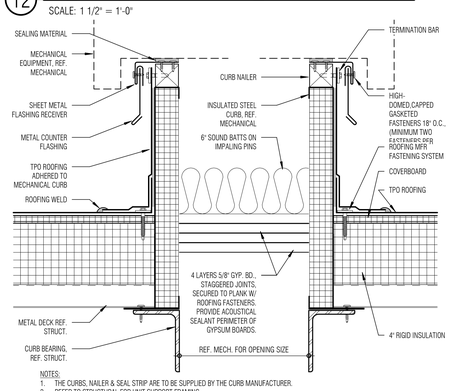

NOTES:
1. THE CURBS, NAILER & SEAL STRIP ARE TO BE SUPPLIED BY THE CURB MANUFACTURER.
2. REFER TO STRUCTURAL FOR UNIT SUPPORT FRAMING.
3. THE MECHANICAL UNITS SHOULD NOT BE SET UNTIL THE ROOF MEMBRANE & FLASHING HAVE BEEN INSTALLED.

18 RF_DECK_MECH CURB-ACOUSTIC_TPO
SCALE: 3" = 1'-0"

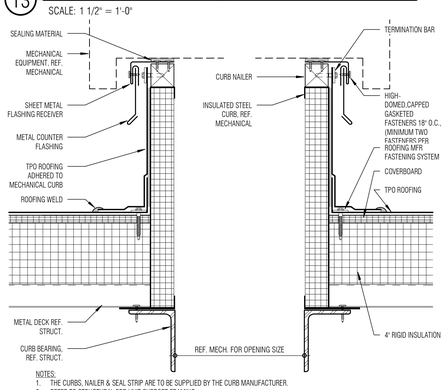

NOTES:
1. THE CURBS, NAILER & SEAL STRIP ARE TO BE SUPPLIED BY THE CURB MANUFACTURER.
2. REFER TO STRUCTURAL FOR UNIT SUPPORT FRAMING.
3. THE MECHANICAL UNITS SHOULD NOT BE SET UNTIL THE ROOF MEMBRANE & FLASHING HAVE BEEN INSTALLED.

19 RF_DECK_MECH CURB_TPO
SCALE: 3" = 1'-0"

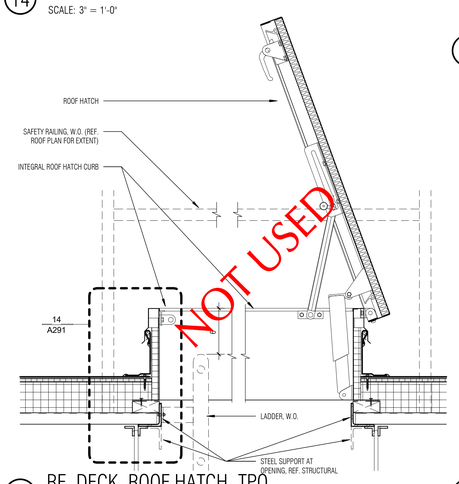

20 RF_DECK_ROOF HATCH_TPO
SCALE: 1 1/2" = 1'-0"

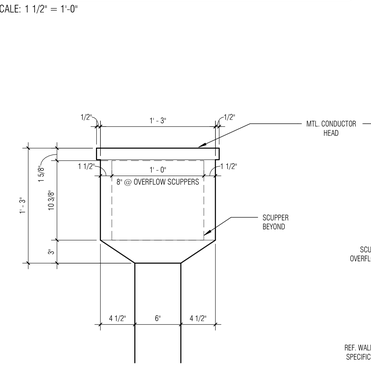

21 RF_SCUPPER_TPO-MAS & STUD
SCALE: 1 1/2" = 1'-0"

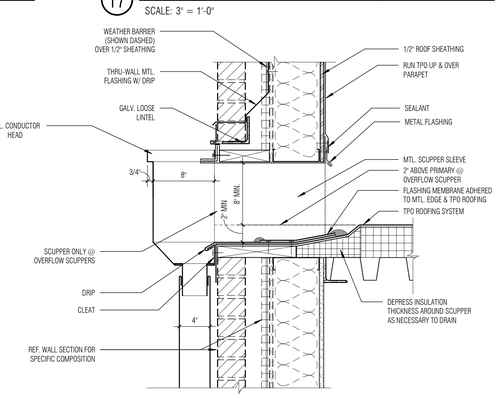

22 RF_SCUPPER_TPO-MAS & STUD
SCALE: 1 1/2" = 1'-0"

LONGVIEW POLICE DEPARTMENT

518 W. SOUTH ST. LONGVIEW, TEXAS 75601

BRINKLEY SARGENT WIGGINTON ARCHITECTS

Architect: Brinkley Sargent Wigginton Architects (972) 960-9970
Landscape: Kendall Landscape Architecture (214) 739-3226
Structural: L.A. Fuess Partners, Inc (214) 593-1118
MEP: M-E Engineers (214) 741-1589
Civil: KSA Engineers, Inc (903) 236-7700
Technology: M+E Engineers (303) 421-6636

HISTORY

#	DATE	DESCRIPTION

08/19/2020

ROOF DETAILS

21719
08/19/2020

A291

BID ISSUE

D:\Revit Locals\JPD_CENTRAL_A19_brinkmer_08-19-2020.rvt
8/19/2020 1:37:57 PM

© 2020 Brinkley Sargent Wigginton Architects, Inc.

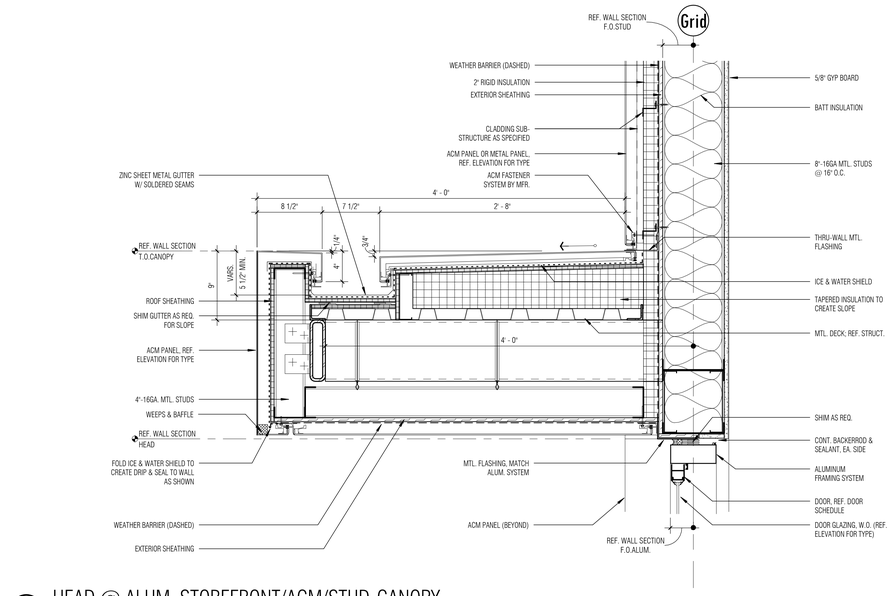

1 HEAD @ ALUM. STOREFRONT/ACM/STUD-CANOPY

SCALE: 1 1/2" = 1'-0"

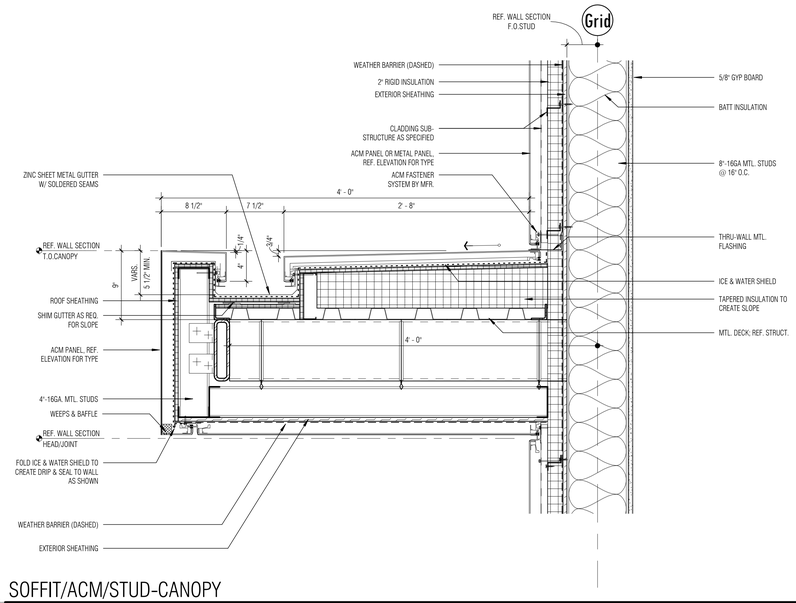

2 SOFFIT/ACM/STUD-CANOPY

SCALE: 1 1/2" = 1'-0"

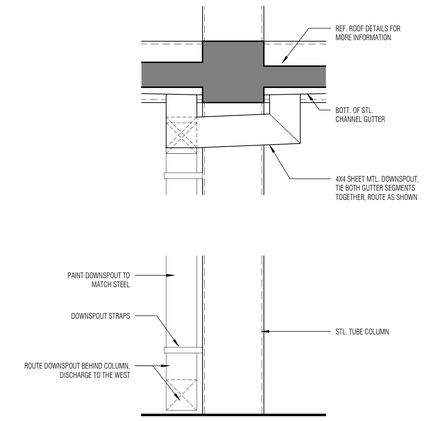

3 DOWNSPOUT ELEVATION @ CANOPY

SCALE: 1 1/2" = 1'-0"

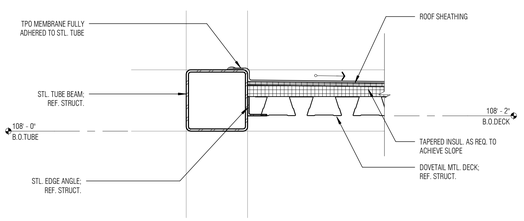

4 ENTRY CANOPY-EDGE DETAIL

SCALE: 1 1/2" = 1'-0"

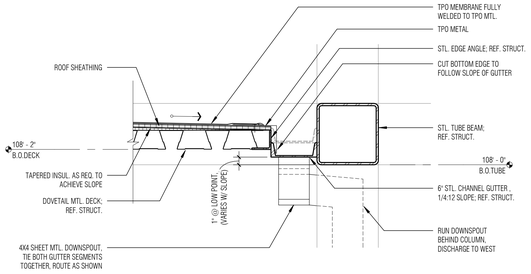

5 ENTRY CANOPY-GUTTER DETAIL

SCALE: 1 1/2" = 1'-0"

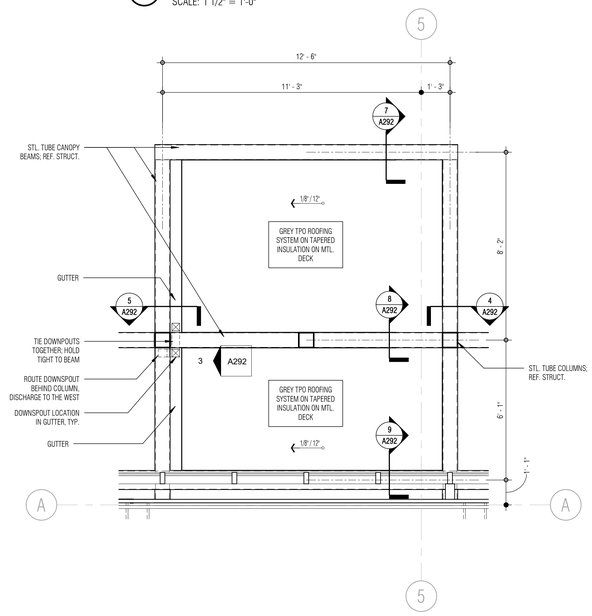

10 ROOF PLAN - ENTRY CANOPY

SCALE: 3/8" = 1'-0"

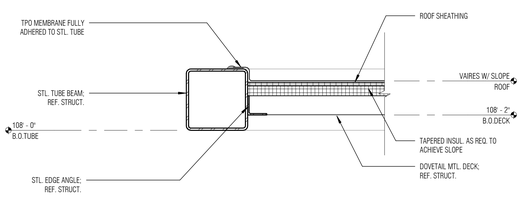

7 ENTRY CANOPY-EDGE DETAIL

SCALE: 1 1/2" = 1'-0"

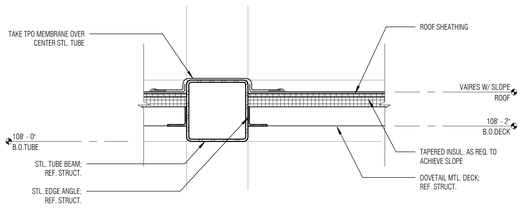

8 ENTRY CANOPY-MID TUBE

SCALE: 1 1/2" = 1'-0"

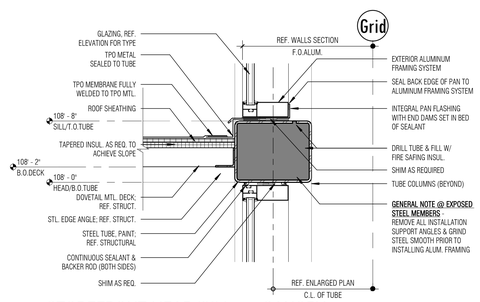

9 STOREFRONT HEAD/SILL @ CANOPY

SCALE: 1 1/2" = 1'-0"

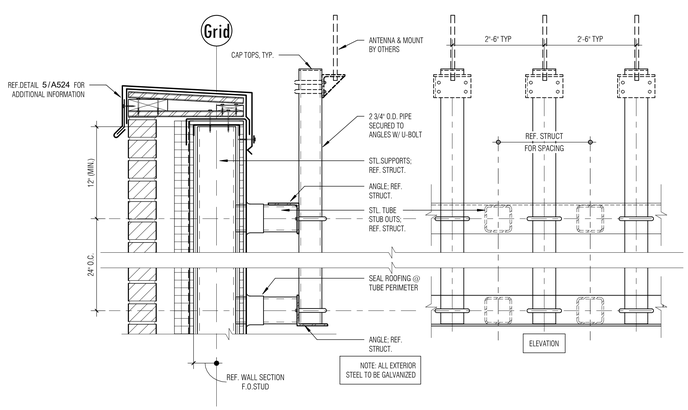

11 ANTENNA ARRAY MOUNTING DETAIL

SCALE: 1 1/2" = 1'-0"

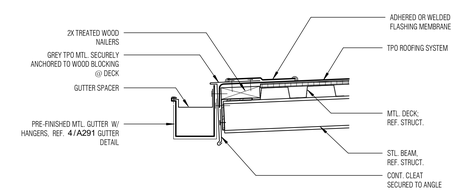

12 RF FASCIA EDGE @ GUTTER

SCALE: 1 1/2" = 1'-0"

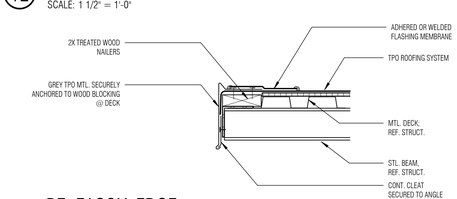

13 RF FASCIA EDGE

SCALE: 1 1/2" = 1'-0"

BRINKLEY SARGENT WIGGINTON ARCHITECTS

Architect: Brinkley Sargent Wigginton Architects (972) 960-9970
Landscape: Kendall Landscape Architecture (214) 739-3226
Structural: L.A. Fuess Partners, Inc (214) 593-1118
MEP: M-E Engineers (214) 741-1589
Civil: KSA Engineers, Inc (903) 236-7700
Technology: M-E Engineers (303) 421-6656

LONGVIEW POLICE DEPARTMENT

518 W. SOUTH ST. LONGVIEW, TEXAS 75601

A403
2

HISTORY

#	DATE	DESCRIPTION

REGISTERED ARCHITECT RONALD L. SARGENT 9941 STATE OF TEXAS
08/19/2020

ROOF DETAILS

21719
08/19/2020
A292

BID ISSUE

5/18/2020 1:38:41 PM

D:\Revit Locals\Pb_CENTRAL_A19_Sacramento_08-18-2020.rvt

© 2020 Brinkley Sargent Wigginton Architects, Inc.

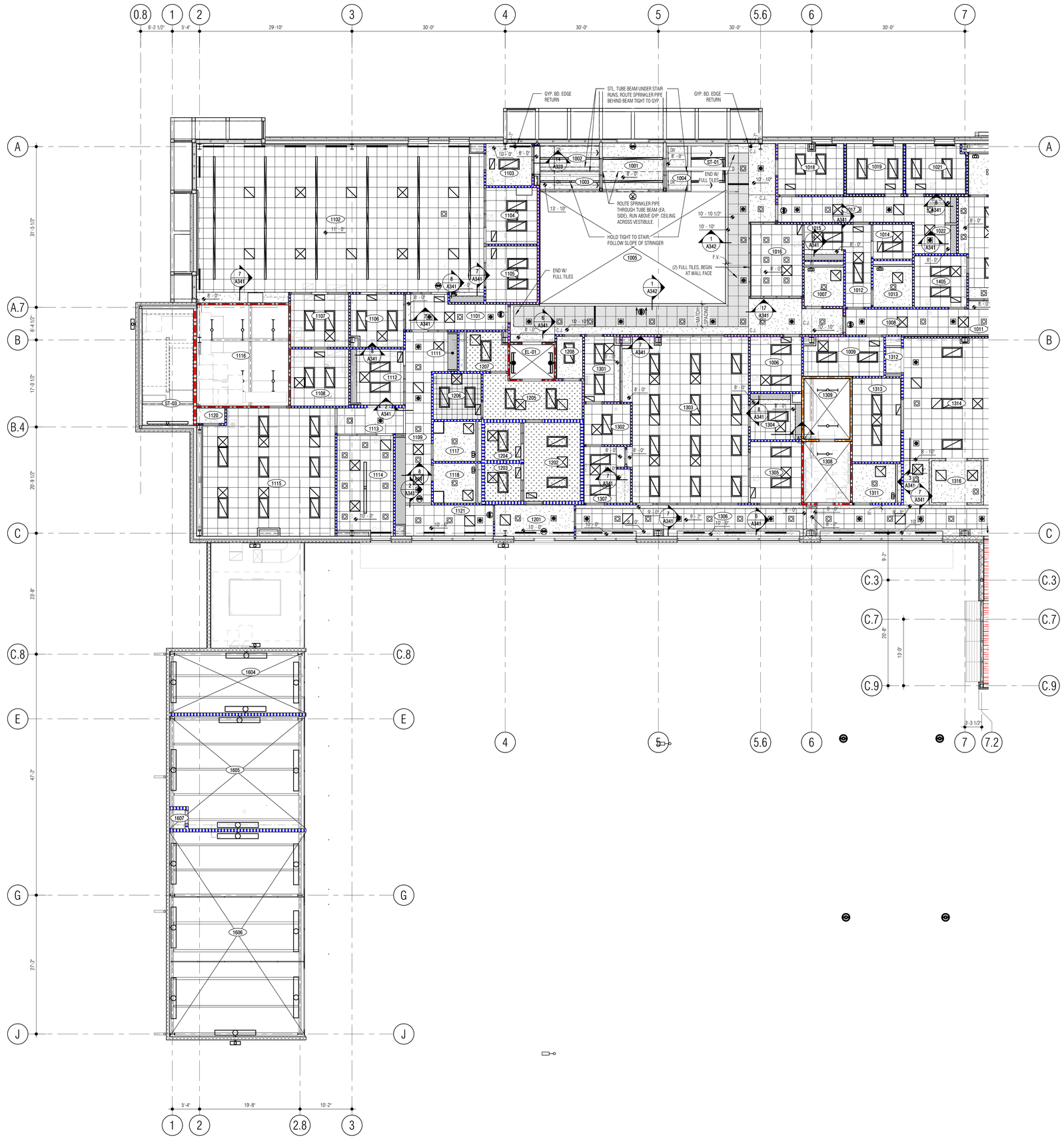

1 LEVEL 1 - REFLECTED CEILING PLAN (WEST)

SCALE: 1/8" = 1'-0"

NORTH

REFLECTED CEILING PLAN LEGEND

- EXPOSED TO ABOVE- PAINTED STRUCTURE
- PAINTED DRYWALL
- 8'X8' ALUMINUM OPEN CELL SYSTEM (IN 2'X2' LAY-IN GRID)
- FURRDOWN, 7' - 2" A.F.F. - U.N.O.
- BIRDSCREEN
- PAINTED DRYWALL "HARDROCK" (1 LAYER)
- 2'X2' METAL LAY-IN CEILING
- 2'X2' LAY-IN ACOUSTICAL CEILING
- UPGRADE 2'X2' LAY-IN ACOUSTICAL CEILING
- 8'X8' WOOD OPEN CELL SYSTEM (IN 2'X2' LAY-IN GRID)
- CERAMIC TILE
- 12"X12" ACOUSTIC CEILING ADHERED TO HIGH-IMPACT DRYWALL
- PAINTED DRYWALL (1 HR ASSEMBLY)
- LAY-IN LIGHT FIXTURE
- SUSPENDED OR SURFACE MOUNTED LINEAR LIGHT
- RECESSED LIGHT FIXTURE
- MECHANICAL DIFFUSER - SUPPLY
- MECHANICAL DIFFUSER - RETURN

SHEET NOTES:

1. MECHANICAL AND ELECTRICAL DATA SHOWN FOR REFERENCE ONLY. COORDINATE WITH MECHANICAL AND ELECTRICAL DRAWINGS. ANY CONFLICTS SHOULD BE ADDRESSED WITH ARCHITECT AS SOON AS POSSIBLE.
2. ALL CEILINGS ARE 9'-0" AFF UNLESS NOTED OTHERWISE.
3. CEILING HEIGHT REFERENCES ON RCP ARE SPECIFIC TO THE ROOMS FINISH FLOOR AND NOT GLOBAL ELEVATION REFERENCES.

ROOM SCHEDULE - LEVEL 1

NUMBER	ROOM NAME
1001	VESTIBULE
1002	AFTER HOURS COUNTER
1003	DISPLAY
1004	DISPLAY
1005	LOBBY
1006	SOFT INTERVIEW (5)
1007	PUBLIC TOILET
1008	VESTIBULE
1009	SEX OFFENDER FILES
1011	PUBLIC SERVICE WINDOW
1012	RAMP
1013	TOILET
1014	HOLD. JUV.
1015	COFFEE
1016	SECURITY DESK
1017	RAMP
1018	WAITING (5)
1019	SEX OFFENDER REG.
1021	SEX OFFENDER REG.
1022	PHOTO/FINGERPRINT
1101	VESTIBULE
1102	COMMUNICATIONS CENTER
1103	AUX CALL TAKER
1104	MANAGER
1105	ADMINISTRATOR
1106	ADMIN. ASST.
1107	TRAINING CONSOLES
1108	TRAINING COORDINATOR
1109	CORRIDOR
1111	CORRIDOR
1112	BREAK
1113	CORRIDOR
1114	CONFERENCE (9)
1115	IT WORKROOM
1116	SERVER ROOM
1117	TOILET
1118	TOILET
1119	LOCKERS
1120	COMPRESSOR
1121	CORRIDOR
1201	VESTIBULE
1202	WORK/PROCESS DESK
1203	SINGLE HOLDING
1204	SINGLE HOLDING
1205	SECURE VESTIBULE
1206	INTERROGATION (3)
1207	TOILET
1208	SOUND VEST.
1301	RECORDS COUNTER
1302	DELIVERY STOR.
1303	RECORDS CLERKS
1304	COPY/WORK/COFFEE
1305	SUPERVISOR
1306	CORRIDOR
1307	CENTRAL MAIL / OFFICER COUNTER
1308	ELEC. CLOSET
1309	IT/DATA CLOSET
1311	STAFF TOILET
1312	TRASH
1313	HONOR GUARD
1314	PATROL LOCKERS
1315	CORRIDOR
1316	ICE/WATER/UTILITY
1317	ELEVATOR DROP
1318	STAFF VEST.
1319	K-9 OFFICE
1320	CORRIDOR
1401	EVID. WORK / LOCKERS
1402	MAJOR CASE / EVID. WORK
1403	STAFF SERVICE WINDOW
1404	EVIDENCE / PROPERTY WORK
1405	EVID. VIEWING / ATTORNEY
1406	TOILET
1407	SUPERVISOR
1408	COFFEE
1409	EV. PROP. FILES
1411	PROPERTY / STORAGE
1412	STORAGE
1413	WALK-IN COOLER
1414	EVID. PROCESSING
1415	WEAPONS STORAGE
1416	DRUG STORAGE
1417	SHORT TERM & JUVENILE PROP. STOR.
1418	SUPPLY
1419	SEXUAL ASSUALT PROP. STOR.
1421	LARGE ITEM STORAGE
1422	TUBE STOR.
1423	LONG TERM PROP. STOR.
1424	JAN.
1425	CORRIDOR
1426	LARGE PROP.
1427	VEST. / AFTERHOURS DROP
1428	EVIDENCE TRANSFER
1429	DESTRUCTION
1431	VEHICULAR PROCESSING
1432	CLEAN DRESS
1433	PRIMARY LAB
1434	POWDER PROCESSING
1435	ALTERNATE LIGHT
1436	PES INVESTIGATORS
1437	SERGEANT
1438	COMPARISON LAB
1439	PES STORAGE
1441	TOILET
1442	DRYING CABINETS
1443	CORRIDOR
1501	VESTIBULE
1502	K-9 STORAGE
1503	TOILET
1504	CENTRAL JAN.
1505	CORRIDOR
1506	MECHANICAL
1508	VEHICLE MAINT. BAY
1509	FLEET STOR./WORK
1511	FLEET OFFICE
1512	EMERGENCY POWER
1513	NORMAL POWER
1514	COMPRESSOR
1515	CLEANING BAY
1516	SWAT VEHICLE
1517	VESTIBULE
1518	SWAT STORAGE / LOCKERS / EQUIP.
1519	WEAPON CLEANING
1521	ARMORY
1522	SPRINKLER
1601	BIKE PATROL
1602	COMPRESSOR
1603	PATROL/TRAFFIC STOR.
1604	GOLF CARTS
1605	MOTORCYCLE
1606	TRAILERS
1607	DRY VALVE/COMPRESSOR
1609	VEST.
EL-01	ELEVATOR
EL-02	STAFF ELEVATOR
ST-01	LOBBY STAIR
ST-02	STAFF STAIR
ST-03	EXIT STAIR

Architect: Brinkley Sargent Wigginton Architects (972) 960-9970
Landscape: Kendall Landscape Architecture (214) 739-3226
Structural: L.A. Fuess Partners, Inc (214) 593-1118
MEP: M-E Engineers (214) 741-1589
Civil: KSA Engineers, Inc (903) 236-7700
Technology: M-E Engineers (303) 421-6656

BRINKLEY SARGENT WIGINTON ARCHITECTS

LONGVIEW POLICE DEPARTMENT

518 W. SOUTH ST. LONGVIEW, TEXAS 75601

HISTORY

#	DATE	DESCRIPTION

REGISTERED ARCHITECT RICHARD SARGENT WIGINTON 9941 STATE OF TEXAS

08/19/2020

LEVEL 1 - REFLECTED CEILING PLAN (WEST)

21719

08/19/2020

A311

BID ISSUE

6/23/2020 4:29:52 PM

G:\Revit Locals\LPD_CENTRAL_A19_Plansperms.rvt

© 2020 Brinkley Sargent Wigginton Architects, Inc.

REFLECTED CEILING PLAN LEGEND

- EXPOSED TO ABOVE-PAINTED STRUCTURE
- 2'X2' LAY-IN ACOUSTICAL CEILING
- PAINTED DRYWALL
- UPGRADE 2'X2' LAY-IN ACOUSTICAL CEILING
- 8'X8' ALUMINUM OPEN CELL SYSTEM (IN 2'X2' LAY-IN GRID)
- 8'X8' WOOD OPEN CELL SYSTEM (IN 2'X2' LAY-IN GRID)
- FURRDOWN, 7' - 2" A.F.F. - U.N.O.
- CERAMIC TILE
- BIRDSCREEN
- 12"X12" ACOUSTIC CEILING ADHERED TO HIGH-IMPACT DRYWALL
- PAINTED DRYWALL "HARDROCK" (1 LAYER)
- PAINTED DRYWALL (1 HR ASSEMBLY)
- 2'X2' METAL LAY-IN CEILING

- LAY-IN LIGHT FIXTURE
- SUSPENDED OR SURFACE MOUNTED LINEAR LIGHT
- RECESSED LIGHT FIXTURE
- MECHANICAL DIFFUSER - SUPPLY
- MECHANICAL DIFFUSER - RETURN

SHEET NOTES:

1. MECHANICAL AND ELECTRICAL DATA SHOWN FOR REFERENCE ONLY. COORDINATE WITH MECHANICAL AND ELECTRICAL DRAWINGS. ANY CONFLICTS SHOULD BE ADDRESSED WITH ARCHITECT AS SOON AS POSSIBLE.
2. ALL CEILINGS ARE 9'-0" AFF UNLESS NOTED OTHERWISE.
3. CEILING HEIGHT REFERENCES ON RCP ARE SPECIFIC TO THE ROOMS FINISH FLOOR AND NOT GLOBAL ELEVATION REFERENCES.

ROOM SCHEDULE - LEVEL 1

NUMBER	ROOM NAME
1001	VESTIBULE
1002	AFTER HOURS COUNTER
1003	DISPLAY
1004	DISPLAY
1005	LOBBY
1006	SOFT INTERVIEW (5)
1007	PUBLIC TOILET
1008	VESTIBULE
1009	SEX OFFENDER FILES
1011	PUBLIC SERVICE WINDOW
1012	RAMP
1013	TOILET
1014	HOLD. JUV.
1015	COFFEE
1016	SECURITY DESK
1017	RAMP
1018	WAITING (5)
1019	SEX OFFENDER REG.
1021	SEX OFFENDER REG.
1022	PHOTO/FINGERPRINT
1101	VESTIBULE
1102	COMMUNICATIONS CENTER
1103	AUX CALL TAKER
1104	MANAGER
1105	ADMINISTRATOR
1106	ADMIN. ASST.
1107	TRAINING CONSOLES
1108	TRAINING COORDINATOR
1109	CORRIDOR
1111	CORRIDOR
1112	BREAK
1113	CORRIDOR
1114	CONFERENCE (9)
1115	IT WORKROOM
1116	SERVER ROOM
1117	TOILET
1118	TOILET
1119	LOCKERS
1120	COMPRESSOR
1121	CORRIDOR
1201	VESTIBULE
1202	WORK/PROCESS DESK
1203	SINGLE HOLDING
1204	SINGLE HOLDING
1205	SECURE VESTIBULE
1206	INTERROGATION (3)
1207	TOILET
1208	SOUND VEST.
1301	RECORDS COUNTER
1302	DELIVERY STOR.
1303	RECORDS CLERKS
1304	COPY/WORK/COFFEE
1305	SUPERVISOR
1306	CORRIDOR
1307	CENTRAL MAIL / OFFICER COUNTER
1308	ELEC. CLOSET
1309	IT/DATA CLOSET
1311	STAFF TOILET
1312	TRASH
1313	HONOR GUARD
1314	PATROL LOCKERS
1315	CORRIDOR
1316	ICE/WATER/UTILITY
1317	ELEVATOR DROP
1318	STAFF VEST.
1319	K-9 OFFICE
1320	CORRIDOR
1401	EVID. WORK / LOCKERS
1402	MAJOR CASE / EVID. WORK
1403	STAFF SERVICE WINDOW
1404	EVIDENCE / PROPERTY WORK
1405	EVID. VIEWING / ATTORNEY
1406	TOILET
1407	SUPERVISOR
1408	COFFEE
1409	EV. PROP. FILES
1411	PROPERTY / STORAGE
1412	STORAGE
1413	WALK-IN COOLER
1414	EVID. PROCESSING
1415	WEAPONS STORAGE
1416	DRUG STORAGE
1417	SHORT TERM & JUVENILE PROP. STOR.
1418	SUPPLY
1419	SEXUAL ASSUALT PROP. STOR.
1421	LARGE ITEM STORAGE
1422	TUBE STOR.
1423	LONG TERM PROP. STOR.
1424	JAN.
1425	CORRIDOR
1426	LARGE PROP.
1427	VEST. / AFTERHOURS DROP
1428	EVIDENCE TRANSFER
1429	DESTRUCTION
1431	VEHICULAR PROCESSING
1432	CLEAN DRESS
1433	PRIMARY LAB
1434	POWDER PROCESSING
1435	ALTERNATE LIGHT
1436	PES INVESTIGATORS
1437	SERGEANT
1438	COMPARISON LAB
1439	PES STORAGE
1441	TOILET
1442	DRYING CABINETS
1443	CORRIDOR
1501	VESTIBULE
1502	K-9 STORAGE
1503	TOILET
1504	CENTRAL JAN.
1505	CORRIDOR
1506	MECHANICAL
1508	VEHICLE MAINT. BAY
1509	FLEET STOR./WORK
1511	FLEET OFFICE
1512	EMERGENCY POWER
1513	NORMAL POWER
1514	COMPRESSOR
1515	CLEANING BAY
1516	SWAT VEHICLE
1517	VESTIBULE
1518	SWAT STORAGE / LOCKERS / EQUIP.
1519	WEAPON CLEANING
1521	ARMORY
1522	SPRINKLER
1601	BIKE PATROL
1602	COMPRESSOR
1603	PATROL/TRAFFIC STOR.
1604	GOLF CARTS
1605	MOTORCYCLE
1606	TRAILERS
1607	DRY VALVE/COMPRESSOR
1609	VEST.
EL-01	ELEVATOR
EL-02	STAFF ELEVATOR
ST-01	LOBBY STAIR
ST-02	STAFF STAIR
ST-03	EXIT STAIR

Architect: Brinkley Sargent Wigginton Architects (972) 960-9970
Landscape: Kendall Landscape Architecture (214) 739-3226
Structural: L.A. Fuess Partners, Inc (214) 593-1118
MEP: M-E Engineers (214) 741-1589
Civil: KSA Engineers, Inc (903) 236-7700
Technology: M-E Engineers (303) 421-6656

BRINKLEY SARGENT WIGGINTON ARCHITECTS

LONGVIEW POLICE DEPARTMENT

518 W. SOUTH ST. LONGVIEW, TEXAS 75601

HISTORY

#	DATE	DESCRIPTION

REGISTERED ARCHITECT JOHN D. SARGENT 9941 STATE OF TEXAS
08/19/2020

LEVEL 1 - REFLECTED CEILING PLAN (EAST)

21719
08/19/2020

A312

BID ISSUE

1 LEVEL 1 - REFLECTED CEILING PLAN (EAST)

SCALE: 1/8" = 1'-0"

NORTH

0' 4'0" 8'0"

8/21/2020 4:27:35 PM

D:\Revit Locals\LPD_CENTRAL_A19_JHenggeme.rvt

© 2020 Brinkley Sargent Wigginton Architects, Inc.

REFLECTED CEILING PLAN LEGEND

- EXPOSED TO ABOVE-PAINTED STRUCTURE
- 2'X2' LAY-IN ACOUSTICAL CEILING
- PAINTED DRYWALL
- UPGRADE 2'X2' LAY-IN ACOUSTICAL CEILING
- 8'X8' ALUMINUM OPEN CELL SYSTEM (IN 2'X2' LAY-IN GRID)
- 8'X8' WOOD OPEN CELL SYSTEM (IN 2'X2' LAY-IN GRID)
- FURRDOWN, 7' - 2" A.F.F. - U.N.O.
- CERAMIC TILE
- BIRDSCREEN
- 12"X12" ACOUSTIC CEILING ADHERED TO HIGH-IMPACT DRYWALL
- PAINTED DRYWALL "HARDROCK" (1 LAYER)
- PAINTED DRYWALL (1 HR ASSEMBLY)
- 2'X2' METAL LAY-IN CEILING

- LAY-IN LIGHT FIXTURE
- SUSPENDED OR SURFACE MOUNTED LINEAR LIGHT
- RECESSED LIGHT FIXTURE
- MECHANICAL DIFFUSER - SUPPLY
- MECHANICAL DIFFUSER - RETURN

SHEET NOTES:

1. MECHANICAL AND ELECTRICAL DATA SHOWN FOR REFERENCE ONLY. COORDINATE WITH MECHANICAL AND ELECTRICAL DRAWINGS. ANY CONFLICTS SHOULD BE ADDRESSED WITH ARCHITECT AS SOON AS POSSIBLE.
2. ALL CEILINGS ARE 9'-0" AFF UNLESS NOTED OTHERWISE.
3. CEILING HEIGHT REFERENCES ON RCP ARE SPECIFIC TO THE ROOMS FINISH FLOOR AND NOT GLOBAL ELEVATION REFERENCES.

ROOM SCHEDULE - LEVEL 2

NUMBER	ROOM NAME
2001	2ND FLOOR LOBBY
2002	VESTIBULE
2003	CATERING/SERVING
2004	TRAINING / COMMUNITY ROOM
2005	STORAGE
2006	A/V
2007	FOUNTAIN
2008	MEN'S
2009	WOMEN'S
2010	COFFEE
2011	CORRIDOR
2012	OFFICERS
2013	WORK/COPY
2014	FILES/STOR.
2015	CORRIDOR
2016	INTERVIEW
2017	CONFERENCE (4)
2018	SERGEANT
2019	TRAINING SGT
2021	VESTIBULE
2022	TRAINING/SIMULATOR
2023	SIMULATOR
2101	RECORDS ARCHIVES
2102	RECEPTION
2103	ADMIN. ASSIST.
2104	CORRIDOR
2105	LIEUTENANTS
2106	LIEUTENANTS
2107	LIEUTENANTS
2108	CONFERENCE
2109	CORRIDOR
2111	JANITOR
2112	SERGEANT (4)
2113	BRIEFING
2114	CORRIDOR
2115	PLANNING RESEARCH
2116	PLANNING / RESEARCH SERGEANT
2117	REPORT WRITING
2118	SPECIAL OPERATIONS LT.
2119	ELEVATOR DROP
2120	CORRIDOR
2121	CORRIDOR
2122	VIDEO DOWNLOAD STATION
2123	MAIL/SUPPLY/FORMS
2124	ELEC. CLOSET
2125	IT/DATA CLOSET
2126	SRQ/SI/PRI SERGEANTS
2127	COMM. SERVICES / PAR STORAGE
2128	GENERAL STORAGE
2129	QUARTERMASTER
2131	QUARTERMASTER STOR.
2132	DRESSING ROOM
2133	CORRIDOR
2134	CORRIDOR
2135	TRAFFIC UNIT
2136	TRAFFIC SERGEANT
2137	STORAGE
2138	BREAKROOM/VENDING
2139	JUVENILE CONF. (4)
2141	SERGEANT (4)
2142	SERGEANT (4)
2143	EQUIP. DISTRIBUTION/STOR.
2144	SPECIAL INVESTIGATIONS
2145	SERGEANT (2)
2201	SOUND VEST.
2202	SUPPLY
2203	QUIET RM
2204	LACTATION/QUIET RM
2205	DRYCLEAN
2206	CORR.
2207	MEN'S
2208	VESTIBULE
2209	WOMEN'S
2211	ACCESSIBLE SHOWER
2212	LOCKER CIRC.
2213	LOCKER ROOM
2214	LOCKER CIRC.
2215	EXERCISE
2216	FOUNTAIN
2217	DRESSING
2218	DRESSING
2219	DRESSING
2221	DRESSING
2222	ACCESSIBLE DRESSING
2223	DRESSING
2224	TOILET/SHOWER
2225	UTILITY ROOM
2226	SHOWER
2227	SHOWER
2228	ACCESSIBLE SHOWER
2229	ACCESSIBLE SHOWER
2231	VESTIBULE
EL-01	ELEVATOR
EL-02	STAFF ELEVATOR
ST-01	LOBBY STAIR
ST-02	STAFF STAIR
ST-03	EXIT STAIR

BRINKLEY SARGENT WIGINTON ARCHITECTS

Architect: Brinkley Sargent Wigginton Architects (972) 960-9970
Landscape: Kendall Landscape Architecture (214) 739-3226
Structural: L.A. Fuess Partners, Inc (214) 593-1118
MEP: M-E Engineers (214) 741-1589
Civil: KSA Engineers, Inc (903) 236-7700
Technology: M-E Engineers (303) 421-6656

LONGVIEW POLICE DEPARTMENT

518 W. SOUTH ST. LONGVIEW, TEXAS 75601

HISTORY

#	DATE	DESCRIPTION

REGISTERED ARCHITECT 9941 STATE OF TEXAS
08/19/2020

LEVEL 2 - REFLECTED CEILING PLAN (WEST)

21719
08/19/2020

A321

BID ISSUE

1 LEVEL 2 - REFLECTED CEILING PLAN (WEST)
SCALE: 1/8" = 1'-0"

NORTH

8/19/2020 2:23:50 PM

D:\Revit Locals\LPD_CENTRAL_A19_Jacobsmar_08-19-2020.rvt

© 2020 Brinkley Sargent Wigginton Architects, Inc.

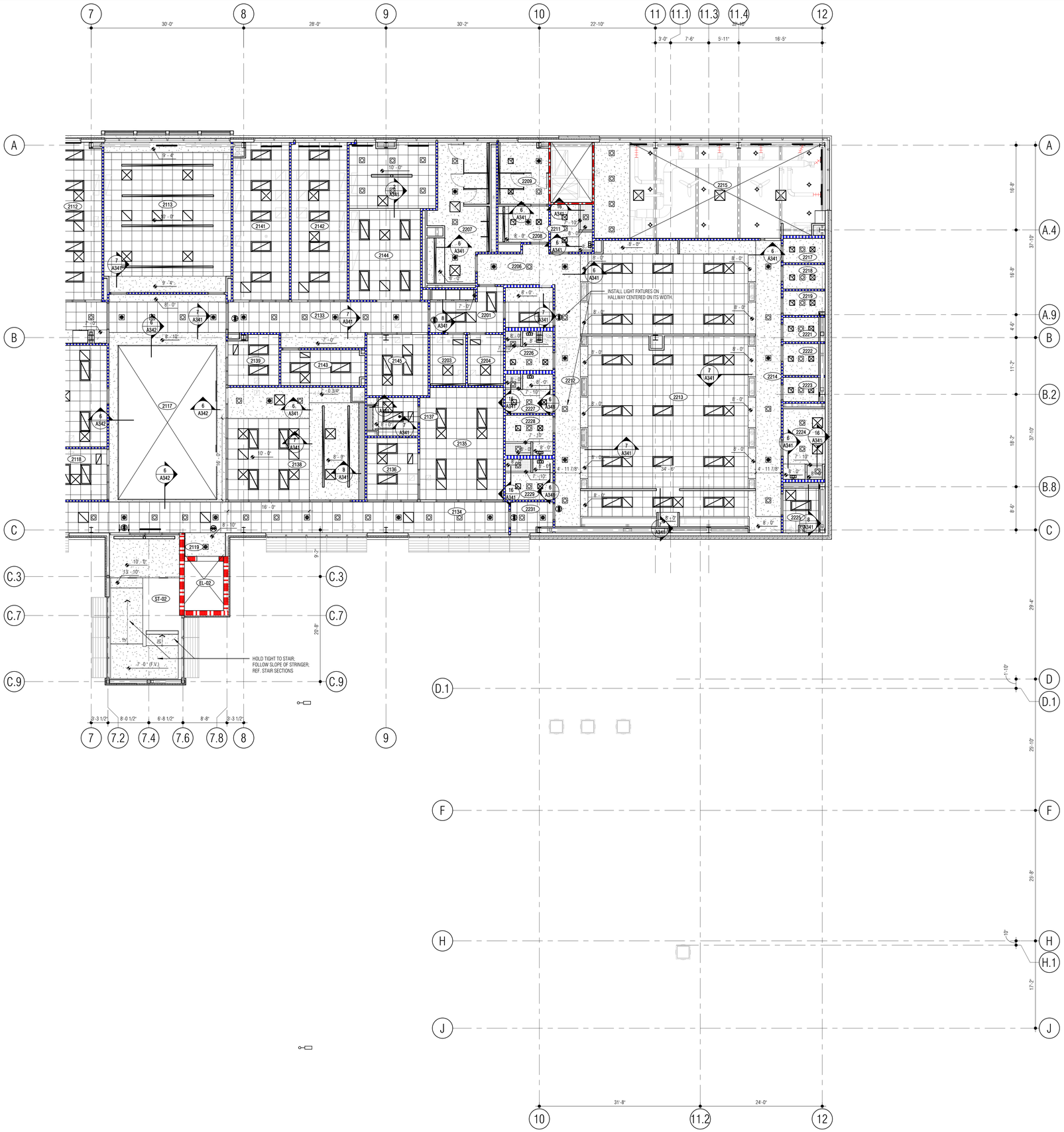

REFLECTED CEILING PLAN LEGEND

- EXPOSED TO ABOVE-PAINTED STRUCTURE
- 2'X2' LAY-IN ACOUSTICAL CEILING
- PAINTED DRYWALL
- UPGRADE 2'X2' LAY-IN ACOUSTICAL CEILING
- 8'X8' ALUMINUM OPEN CELL SYSTEM (IN 2'X2' LAY-IN GRID)
- 8'X8' WOOD OPEN CELL SYSTEM (IN 2'X2' LAY-IN GRID)
- FURRDOWN, 7' - 2" A.F.F. - U.N.O.
- CERAMIC TILE
- BIRDSCREEN
- 12"X12" ACOUSTIC CEILING ADHERED TO HIGH-IMPACT DRYWALL
- PAINTED DRYWALL "HARDROCK" (1 LAYER)
- PAINTED DRYWALL (1 HR ASSEMBLY)
- 2'X2' METAL LAY-IN CEILING

- LAY-IN LIGHT FIXTURE
- SUSPENDED OR SURFACE MOUNTED LINEAR LIGHT
- RECESSED LIGHT FIXTURE
- MECHANICAL DIFFUSER - SUPPLY
- MECHANICAL DIFFUSER - RETURN

SHEET NOTES:

1. MECHANICAL AND ELECTRICAL DATA SHOWN FOR REFERENCE ONLY. COORDINATE WITH MECHANICAL AND ELECTRICAL DRAWINGS. ANY CONFLICTS SHOULD BE ADDRESSED WITH ARCHITECT AS SOON AS POSSIBLE.
2. ALL CEILINGS ARE 9'-0" AFF UNLESS NOTED OTHERWISE.
3. CEILING HEIGHT REFERENCES ON RCP ARE SPECIFIC TO THE ROOMS FINISH FLOOR AND NOT GLOBAL ELEVATION REFERENCES.

ROOM SCHEDULE - LEVEL 2

NUMBER	ROOM NAME
2001	2ND FLOOR LOBBY
2002	VESTIBULE
2003	CATERING/SERVING
2004	TRAINING / COMMUNITY ROOM
2005	STORAGE
2006	A-V
2007	FOUNTAIN
2008	MEN'S
2009	WOMEN'S
2010	COFFEE
2011	CORRIDOR
2012	OFFICERS
2013	WORK/COPY
2014	FILES/STOR.
2015	CORRIDOR
2016	INTERVIEW
2017	CONFERENCE (4)
2018	SERGEANT
2019	TRAINING SGT
2021	VESTIBULE
2022	TRAINING/SIMULATOR
2023	SIMULATOR
2101	RECORDS ARCHIVES
2102	RECEPTION
2103	ADMIN. ASSIST.
2104	CORRIDOR
2105	LIEUTENANTS
2106	LIEUTENANTS
2107	LIEUTENANTS
2108	CONFERENCE
2109	CORRIDOR
2111	JANITOR
2112	SERGEANT (4)
2113	BRIEFING
2114	CORRIDOR
2115	PLANNING RESEARCH
2116	PLANNING / RESEARCH SERGEANT
2117	REPORT WRITING
2118	SPECIAL OPERATIONS LT.
2119	ELEVATOR DROP
2120	CORRIDOR
2121	CORRIDOR
2122	VIDEO DOWNLOAD STATION
2123	MAIL/SUPPLY/FORMS
2124	ELEC. CLOSET
2125	IT/DATA CLOSET
2126	SRO/SI/PRI SERGEANTS
2127	COMM. SERVICES / PAR STORAGE
2128	GENERAL STORAGE
2129	QUARTERMASTER
2131	QUARTERMASTER STOR.
2132	DRESSING ROOM
2133	CORRIDOR
2134	CORRIDOR
2135	TRAFFIC UNIT
2136	TRAFFIC SERGEANT
2137	STORAGE
2138	BREAKROOM/VENDING
2139	JUVENILE CONF. (4)
2141	SERGEANT (4)
2142	SERGEANT (4)
2143	EQUIP. DISTRIBUTION/STOR.
2144	SPECIAL INVESTIGATIONS
2145	SERGEANT (2)
2201	SOUND VEST.
2202	SUPPLY
2203	QUIET RM
2204	LACTATION/QUIET RM
2205	DRYCLEAN
2206	CORR.
2207	MEN'S
2208	VESTIBULE
2209	WOMEN'S
2211	ACCESSIBLE SHOWER
2212	LOCKER CIRC.
2213	LOCKER ROOM
2214	LOCKER CIRC.
2215	EXERCISE
2216	FOUNTAIN
2217	DRESSING
2218	DRESSING
2219	DRESSING
2221	DRESSING
2222	ACCESSIBLE DRESSING
2223	DRESSING
2224	TOILET/SHOWER
2225	UTILITY ROOM
2226	SHOWER
2227	SHOWER
2228	ACCESSIBLE SHOWER
2229	ACCESSIBLE SHOWER
2231	VESTIBULE
EL-01	ELEVATOR
EL-02	STAFF ELEVATOR
ST-01	LOBBY STAIR
ST-02	STAFF STAIR
ST-03	EXIT STAIR

Architect: Brinkley Sargent Wigginton Architects (972) 960-9970
Landscape: Kendall Landscape Architecture (214) 739-3226
Structural: L.A. Fuess Partners, Inc (214) 593-1118
MEP: M-E Engineers (214) 741-1589
Civil: KSA Engineers, Inc (903) 236-7700
Technology: M+E Engineers (303) 421-6656

BRINKLEY SARGENT WIGINTON ARCHITECTS

LONGVIEW POLICE DEPARTMENT

518 W. SOUTH ST. LONGVIEW, TEXAS 75601

HISTORY

#	DATE	DESCRIPTION

REGISTERED ARCHITECT RONALD SARGENT STATE OF TEXAS 9941 05/19/2020

LEVEL 2 - REFLECTED CEILING PLAN (EAST)

21719
08/19/2020

A322

BID ISSUE

1 LEVEL 2 - REFLECTED CEILING PLAN (EAST)
SCALE: 1/8" = 1'-0"

NORTH

0' 4'0" 8'0"

6/30/2020 5:37:40 PM

C:\Revit Local\LPD_CENTRAL_A19_jhinesperez.rvt

© 2020 Brinkley Sargent Wigginton Architects, Inc.

1 LEVEL 3 - REFLECTED CEILING PLAN (WEST)

SCALE: 1/8" = 1'-0"

NORTH

REFLECTED CEILING PLAN LEGEND

- EXPOSED TO ABOVE-PAINTED STRUCTURE
- 2'X2' LAY-IN ACOUSTICAL CEILING
- PAINTED DRYWALL
- UPGRADE 2'X2' LAY-IN ACOUSTICAL CEILING
- 8'X8' ALUMINUM OPEN CELL SYSTEM (IN 2'X2' LAY-IN GRID)
- 8'X8' WOOD OPEN CELL SYSTEM (IN 2'X2' LAY-IN GRID)
- FURRDOWN, 7' - 2" A.F.F. - U.N.O.
- CERAMIC TILE
- BIRDSCREEN
- 12"X12" ACOUSTIC CEILING ADHERED TO HIGH-IMPACT DRYWALL
- PAINTED DRYWALL "HARDROCK" (1 LAYER)
- PAINTED DRYWALL (1 HR ASSEMBLY)
- 2'X2' METAL LAY-IN CEILING
- LAY-IN LIGHT FIXTURE
- SUSPENDED OR SURFACE MOUNTED LINEAR LIGHT
- RECESSED LIGHT FIXTURE
- MECHANICAL DIFFUSER - SUPPLY
- MECHANICAL DIFFUSER - RETURN

SHEET NOTES:

1. MECHANICAL AND ELECTRICAL DATA SHOWN FOR REFERENCE ONLY. COORDINATE WITH MECHANICAL AND ELECTRICAL DRAWINGS. ANY CONFLICTS SHOULD BE ADDRESSED WITH ARCHITECT AS SOON AS POSSIBLE.
2. ALL CEILINGS ARE 9'-0" AFF UNLESS NOTED OTHERWISE
3. CEILING HEIGHT REFERENCES ON RCP ARE SPECIFIC TO THE ROOMS FINISH FLOOR AND NOT GLOBAL ELEVATION REFERENCES.

ROOM SCHEDULE - LEVEL 3

NUMBER	ROOM NAME
3001	OVERLOOK
3002	RECEPTION / WAITING
3003	CORRIDOR
3004	COFFEE
3005	OFFICE MANAGER
3006	ADMIN. ASSIST.
3007	CORRIDOR
3008	CONFERENCE
3009	EXEC. ASSIST.
3011	CORRIDOR
3012	POLICE CHIEF
3013	ASSISTANT CHIEF
3014	WORK/COPY
3015	WOMENS
3016	PERSONNEL FILES
3017	MENS
3018	ADMIN. SERGEANT
3019	CORRIDOR
3021	CENTRAL SUPPLY
3022	CORRIDOR
3023	ASSIST. CHIEF
3024	CAPTAIN
3025	CAPTAIN
3026	SUPPORT SERVICES LT.
3027	CAPTAIN
3028	I.A. LIEUTENANT
3029	I.A. LIEUTENANT
3031	I.A. FILES
3032	CONF. (4) / INTERVIEW
3101	CORRIDOR
3102	RECEPTION
3103	SUSPECT WAITING
3104	INTERROGATION (3)
3105	INTERROGATION (3)
3106	TOILET
3107	P.I.O. / SOCIAL MEDIA
3108	WOMEN'S
3109	MEN'S
3111	CORRIDOR
3112	SHREDDER
3113	STORAGE
3114	CORRIDOR
3115	ELECTRICAL CLOSET
3116	IT/DATA CLOSET
3117	CORRIDOR
3118	JANITOR
3119	DETECTIVES
3121	DETECTIVES
3122	ELEVATOR DROP
3123	CORRIDOR
3124	DETECTIVES
3125	DETECTIVES
3126	CORRIDOR
3127	DETECTIVES
3128	SERGEANT
3129	STORAGE
3130	COFFEE
3131	COPY/WORK/COFFEE
3132	EQUIPMENT ROOM
3133	EVIDENCE STORAGE
3134	CYBER LAB RECEIVING
3135	TECH. INVESTIGATORS/CYBER LAB
3136	FORENSICS I.T.
3137	SOLDER WORKSTATION
3138	TASK FORCE OFFICERS
3139	VIDEO STATION
3141	TASK FORCE OFFICERS
3142	CORRIDOR
3143	TECH. INVESTIGATORS
3144	SERGEANT
3145	SERGEANT
3146	SERGEANT
3147	CORRIDOR
3148	DETECTIVE
3149	STRATEGY CONF.
3151	CORRIDOR
3152	CORRIDOR
3153	FOUNTAIN
3154	CORRIDOR
3155	LIEUTENANT
3201	CORRIDOR
3202	INTERVIEW (4)
3203	INTERVIEW (4)
3204	VICTIM ASSIST
3205	ADMIN. ASSIST.
3206	SOFT INTERVIEW
3207	PUBLIC WAITING
3208	TOILET
3209	TOILET
4001	PENTHOUSE
4002	ELEV. EQUIP.
EL-01	ELEVATOR
EL-02	STAFF ELEVATOR
ST-01	LOBBY STAIR
ST-02	STAFF STAIR
ST-03	EXIT STAIR

Architect: Brinkley Sargent Wigginton Architects (972) 960-9970
Landscape: Kendall Landscape Architecture (214) 739-3226
Structural: L.A. Fuess Partners, Inc (214) 593-1118
MEP: M-E Engineers (214) 741-1589
Civil: KSA Engineers, Inc (903) 236-7700
Technology: M-E Engineers (303) 421-6656

BRINKLEY SARGENT WIGINTON ARCHITECTS

LONGVIEW POLICE DEPARTMENT

518 W. SOUTH ST. LONGVIEW, TEXAS 75601

HISTORY

#	DATE	DESCRIPTION

REGISTERED ARCHITECT 9941 STATE OF TEXAS
08/19/2020

LEVEL 3 - REFLECTED CEILING PLAN (WEST)

21719
08/19/2020

A331

BID ISSUE

8/19/2020 2:34:29 PM

E:\Revit Locals\LPD_CENTRAL_A19_Jacobsen_08-19-2020.rvt

© 2020 Brinkley Sargent Wigginton Architects, Inc.

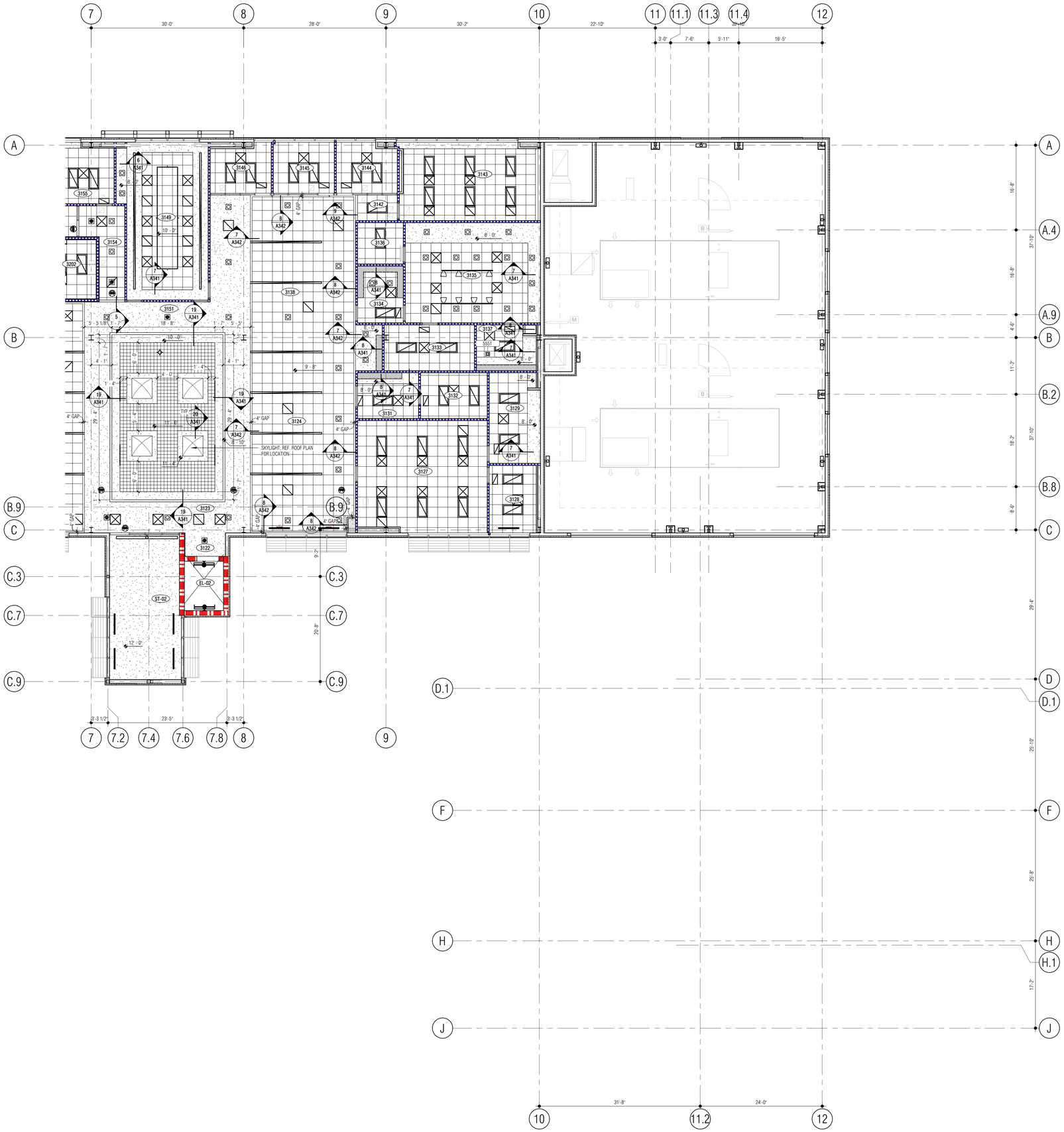

REFLECTED CEILING PLAN LEGEND

- EXPOSED TO ABOVE-PAINTED STRUCTURE
- 2'X2' LAY-IN ACOUSTICAL CEILING
- PAINTED DRYWALL
- UPGRADE 2'X2' LAY-IN ACOUSTICAL CEILING
- 8'X8' ALUMINUM OPEN CELL SYSTEM (IN 2'X2' LAY-IN GRID)
- 8'X8' WOOD OPEN CELL SYSTEM (IN 2'X2' LAY-IN GRID)
- FURRDOWN, 7' - 2" A.F.F. - U.N.O.
- CERAMIC TILE
- BIRDSCREEN
- 12"X12" ACOUSTIC CEILING ADHERED TO HIGH-IMPACT DRYWALL
- PAINTED DRYWALL "HARDROCK" (1 LAYER)
- PAINTED DRYWALL (1 HR ASSEMBLY)
- 2'X2' METAL LAY-IN CEILING

- LAY-IN LIGHT FIXTURE
- SUSPENDED OR SURFACE MOUNTED LINEAR LIGHT
- RECESSED LIGHT FIXTURE
- MECHANICAL DIFFUSER - SUPPLY
- MECHANICAL DIFFUSER - RETURN

SHEET NOTES:

1. MECHANICAL AND ELECTRICAL DATA SHOWN FOR REFERENCE ONLY. COORDINATE WITH MECHANICAL AND ELECTRICAL DRAWINGS. ANY CONFLICTS SHOULD BE ADDRESSED WITH ARCHITECT AS SOON AS POSSIBLE.
2. ALL CEILINGS ARE 9'-0" AFF UNLESS NOTED OTHERWISE.
3. CEILING HEIGHT REFERENCES ON RCP ARE SPECIFIC TO THE ROOMS FINISH FLOOR AND NOT GLOBAL ELEVATION REFERENCES.

ROOM SCHEDULE - LEVEL 3

NUMBER	ROOM NAME
3001	OVERLOOK
3002	RECEPTION / WAITING
3003	CORRIDOR
3004	COFFEE
3005	OFFICE MANAGER
3006	ADMIN. ASSIST.
3007	CORRIDOR
3008	CONFERENCE
3009	EXEC. ASSIST.
3011	CORRIDOR
3012	POLICE CHIEF
3013	ASSISTANT CHIEF
3014	WORK/COPY
3015	WOMENS
3016	PERSONNEL FILES
3017	MENS
3018	ADMIN. SERGEANT
3019	CORRIDOR
3021	CENTRAL SUPPLY
3022	CORRIDOR
3023	ASSIST. CHIEF
3024	CAPTAIN
3025	CAPTAIN
3026	SUPPORT SERVICES LT.
3027	CAPTAIN
3028	I.A. LIEUTENANT
3029	I.A. LIEUTENANT
3031	I.A. FILES
3032	CONF. (4) / INTERVIEW
3101	CORRIDOR
3102	RECEPTION
3103	SUSPECT WAITING
3104	INTERROGATION (3)
3105	INTERROGATION (3)
3106	TOILET
3107	P.I.O. / SOCIAL MEDIA
3108	WOMEN'S
3109	MEN'S
3111	CORRIDOR
3112	SHREDDER
3113	STORAGE
3114	CORRIDOR
3115	ELECTRICAL CLOSET
3116	IT/DATA CLOSET
3117	CORRIDOR
3118	JANITOR
3119	DETECTIVES
3121	DETECTIVES
3122	ELEVATOR DROP
3123	CORRIDOR
3124	DETECTIVES
3125	DETECTIVES
3126	CORRIDOR
3127	DETECTIVES
3128	SERGEANT
3129	STORAGE
3130	COFFEE
3131	COPY/WORK/COFFEE
3132	EQUIPMENT ROOM
3133	EVIDENCE STORAGE
3134	CYBER LAB RECEIVING
3135	TECH. INVESTIGATORS/CYBER LAB
3136	FORENSICS I.T.
3137	SOLDER WORKSTATION
3138	TASK FORCE OFFICERS
3139	VIDEO STATION
3141	TASK FORCE OFFICERS
3142	CORRIDOR
3143	TECH. INVESTIGATORS
3144	SERGEANT
3145	SERGEANT
3146	SERGEANT
3147	CORRIDOR
3148	DETECTIVE
3149	STRATEGY CONF.
3151	CORRIDOR
3152	CORRIDOR
3153	FOUNTAIN
3154	CORRIDOR
3155	LIEUTENANT
3201	CORRIDOR
3202	INTERVIEW (4)
3203	INTERVIEW (4)
3204	VICTIM ASSIST.
3205	ADMIN. ASSIST.
3206	SOFT INTERVIEW
3207	PUBLIC WAITING
3208	TOILET
3209	TOILET
4001	PENTHOUSE
4002	ELEV. EQUIP.
EL-01	ELEVATOR
EL-02	STAFF ELEVATOR
ST-01	LOBBY STAIR
ST-02	STAFF STAIR
ST-03	EXIT STAIR

Architect: Brinkley Sargent Wigginton Architects (972) 960-9970
Landscape: Kendall Landscape Architecture (214) 739-3226
Structural: L.A. Fuess Partners, Inc (214) 593-1118
MEP: M-E Engineers (214) 741-1589
Civil: KSA Engineers, Inc (903) 236-7700
Technology: M-E Engineers (303) 421-6656

BRINKLEY SARGENT WIGINTON ARCHITECTS

LONGVIEW POLICE DEPARTMENT

518 W. SOUTH ST. LONGVIEW, TEXAS 75601

HISTORY

#	DATE	DESCRIPTION

REGISTERED ARCHITECT RICHARD SARGENT WIGINTON 9941 STATE OF TEXAS
08/19/2020

LEVEL 3 - REFLECTED CEILING PLAN (EAST)

BID ISSUE

21719
08/19/2020

A332

1 LEVEL 3 - REFLECTED CEILING PLAN (EAST)
SCALE: 1/8" = 1'-0"

NORTH

0' 4'0" 8'0"

8/19/2020 2:36:10 PM

D:\Revit Locals\LPD_CENTRAL_v19_boonnew_dlh-18-2020.rvt

© 2020 Brinkley Sargent Wigginton Architects, Inc.

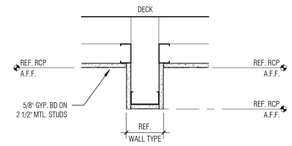

1 CD_STUD-GYP_BULKHEAD1_GYP CLG
SCALE: 1 1/2" = 1'-0"

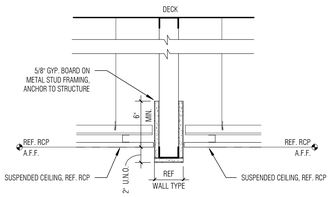

2 CD_STUD-GYP_BULKHEAD1_SUSP CLG
SCALE: 1 1/2" = 1'-0"

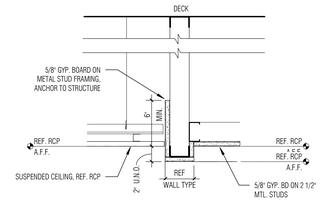

3 CD_STUD-GYP_BULKHEAD1_SUSP AND GYP CLG
SCALE: 1 1/2" = 1'-0"

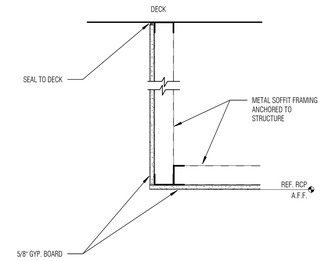

4 CD_STUD-GYP_EDGE NO CLG
SCALE: 1 1/2" = 1'-0"

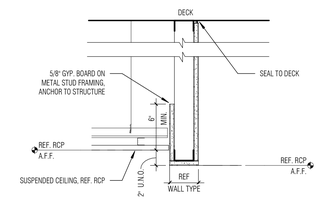

5 CD_STUD-GYP_BULKHEAD1_SUSP CLG AND NO CLG
SCALE: 1 1/2" = 1'-0"

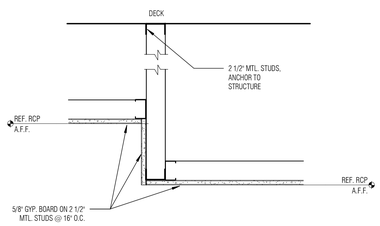

6 CD_STUD_GYP-GYP STEP
SCALE: 1 1/2" = 1'-0"

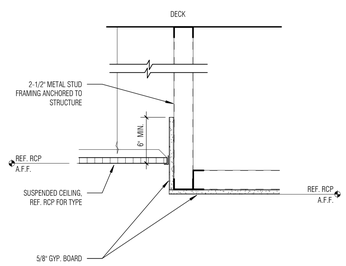

7 CD_STUD-GYP_EDGE W/ CLG
SCALE: 1 1/2" = 1'-0"

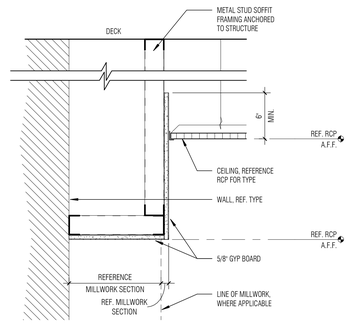

8 CD_STUD-GYP_CAB FURRDWN W/ CLG
SCALE: 1 1/2" = 1'-0"

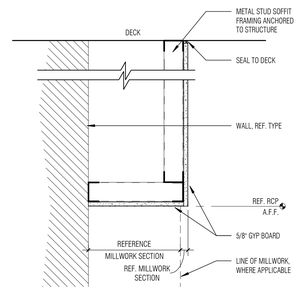

9 CD_STUD-GYP_CAB FURRDWN NO CLG
SCALE: 1 1/2" = 1'-0"

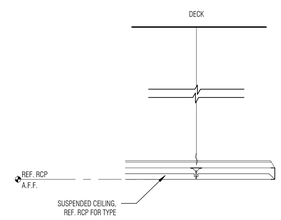

10 CD_SUSP CLG CLOUD
SCALE: 1 1/2" = 1'-0"

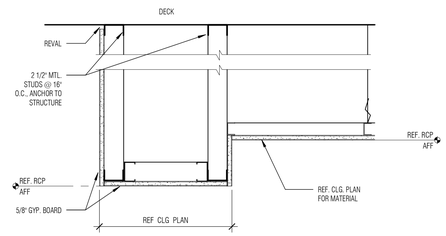

11 CD_STUD-GYP_BULKHEAD WIDE_NO CLG
SCALE: 1 1/2" = 1'-0"

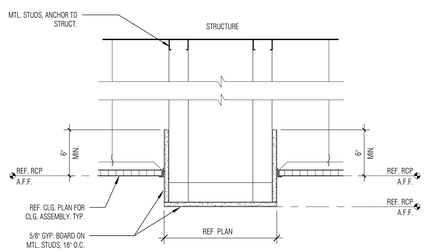

12 CD_STUD-GYP_BULKHEAD WIDE_SUSP CLG
SCALE: 1 1/2" = 1'-0"

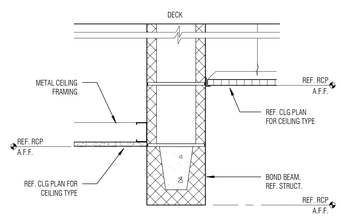

13 CD_CMU_GYP-SUSP BULKHEAD
SCALE: 1 1/2" = 1'-0"

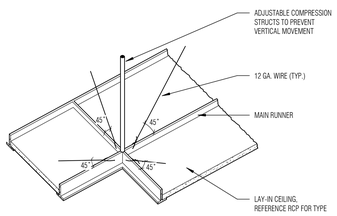

14 CD_TYP LAY-IN AXON
SCALE: 1 1/2" = 1'-0"

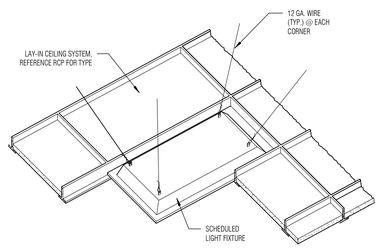

15 CD_TYP LAY-IN LIGHT AXON
SCALE: 1 1/2" = 1'-0"

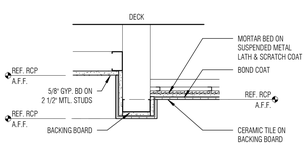

16 CD_STUD-GYP_TILE-SUSP - SHOWER
SCALE: 1 1/2" = 1'-0"

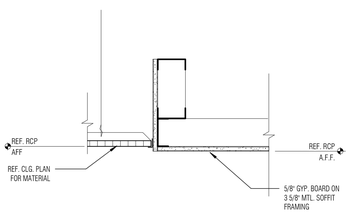

17 CD_SUSPENDED CLG. & GYP-BD.
SCALE: 1 1/2" = 1'-0"

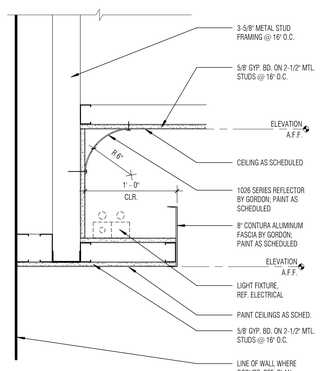

18 CD_LIGHTING_COVE W/ REFLECTOR
SCALE: 1 1/2" = 1'-0"

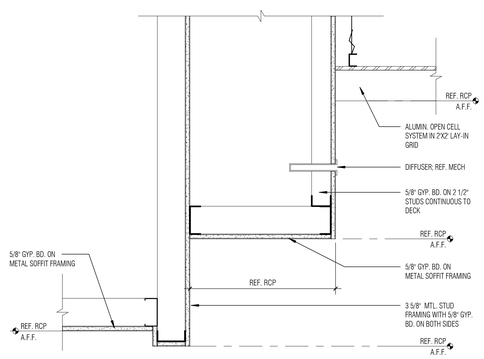

19 CD_GYP-BD. CEILING STEP / OPEN GRID CEILING
SCALE: 1 1/2" = 1'-0"

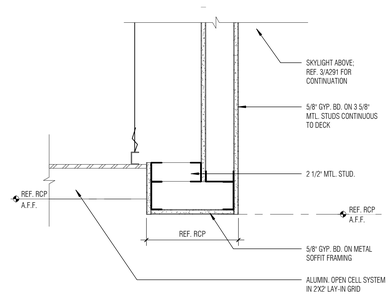

20 CD_ALUM. OPEN GRID & GYP. AT SKYLIGHT
SCALE: 1 1/2" = 1'-0"

LONGVIEW POLICE DEPARTMENT

518 W. SOUTH ST. LONGVIEW, TEXAS 75601

Architect: Brinkley Sargent Wigginton Architects (972) 960-9970
Landscape: Kendall Landscape Architecture (214) 739-3226
Structural: L.A. Fuess Partners, Inc (214) 593-1118
MEP: M-E Engineers (214) 741-1589
Civil: KSA Engineers, Inc (903) 236-7700
Technology: M-E Engineers (303) 421-6656

BRINKLEY SARGENT WIGGINTON ARCHITECTS

HISTORY

#	DATE	DESCRIPTION

CEILING DETAILS

21719
08/19/2020

A341

BID ISSUE

8/19/2020 2:38:28 PM
D:\Revit Local\LPD_CENTRAL_A19_Sanchezm_08-18-2020.rvt

© 2020 Brinkley Sargent Wigginton Architects, Inc.

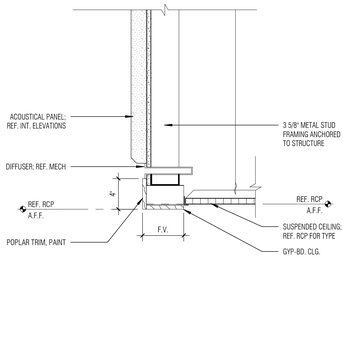

1 CD LEVEL 1 ATRIUM EDGE CONDITION AT LOBBY
SCALE: 1 1/2" = 1'-0"

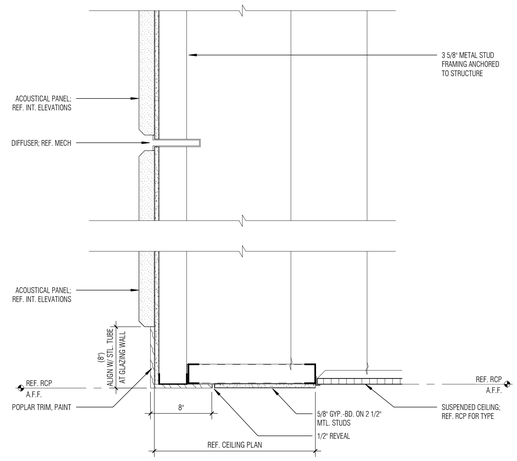

2 CD LEVEL 2 ATRIUM EDGE CONDITION AT LOBBY
SCALE: 1 1/2" = 1'-0"

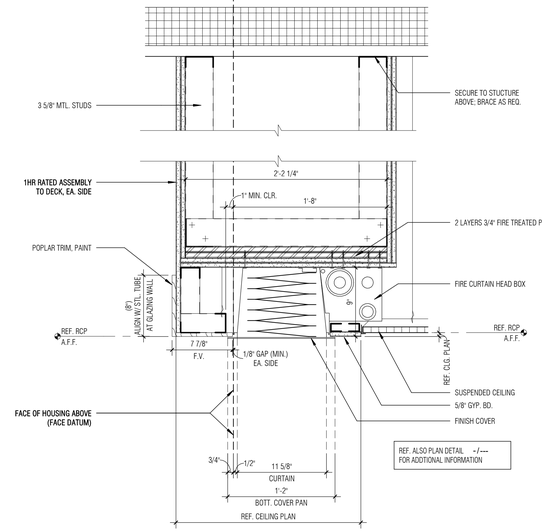

3 CD LEVEL 3 ATRIUM EDGE COND. AT LOBBY
SCALE: 1 1/2" = 1'-0"

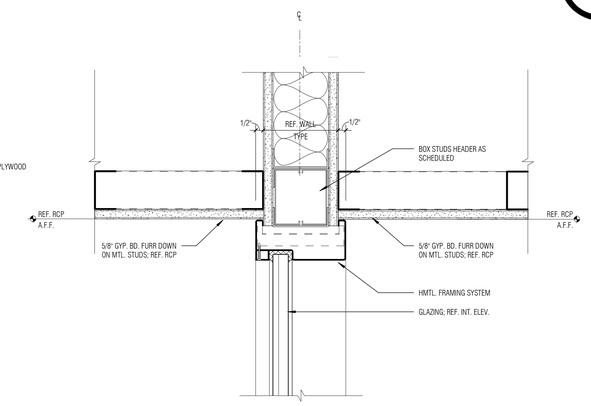

4 CD HEADER AT GYP. BD. CLG. & FURRDWN
SCALE: 3" = 1'-0"

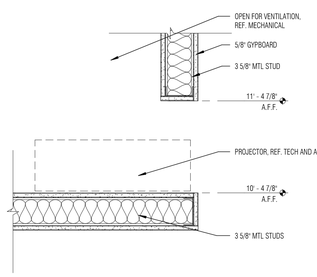

5 SD PROJECTOR POCKET DTL.
SCALE: 1 1/2" = 1'-0"

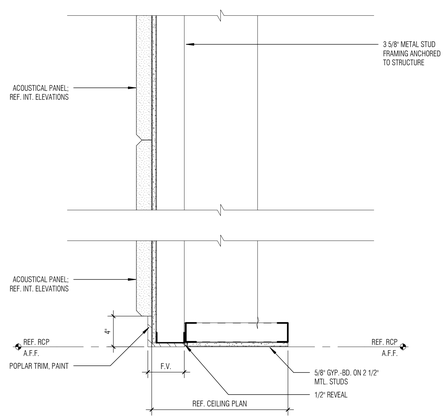

6 CD LEVEL 2 STAFF ATRIUM EDGE CONDITION
SCALE: 1 1/2" = 1'-0"

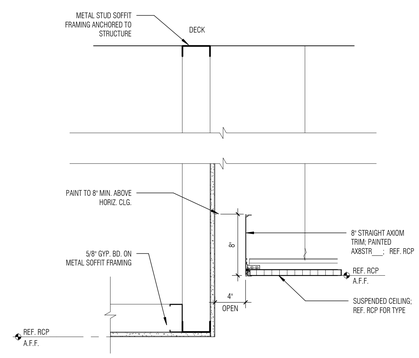

7 CD GYP.-BD. CEILING AT GAP AND LAY-IN CLG.
SCALE: 1 1/2" = 1'-0"

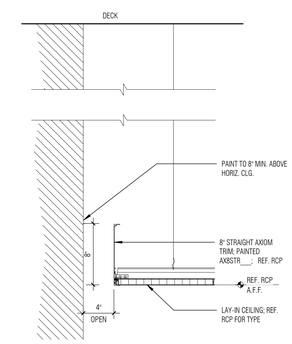

8 CD LAY-IN CEILING AT GAP
SCALE: 1 1/2" = 1'-0"

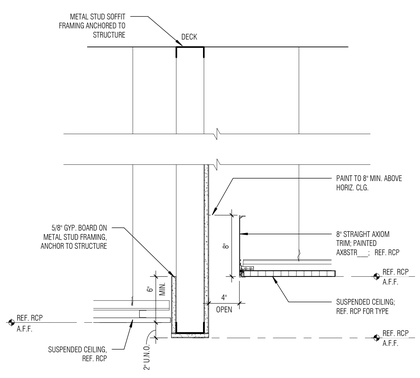

9 CD STUD GYP BULKHEAD AT GAP AND LAY-IN CLG.
SCALE: 1 1/2" = 1'-0"

BRINKLEY SARGENT WIGINTON ARCHITECTS

Architect: Brinkley Sargent Wigginton Architects (972) 960-9970
Landscape: Kendall Landscape Architecture (214) 739-3226
Structural: L.A. Fuess Partners, Inc (214) 593-1118
MEP: M-E Engineers (214) 741-1589
Civil: KSA Engineers, Inc (903) 236-7700
Technology: M-E Engineers (303) 421-6656

LONGVIEW POLICE DEPARTMENT

518 W. SOUTH ST. LONGVIEW, TEXAS 75601

HISTORY		
#	DATE	DESCRIPTION

REGISTERED ARCHITECT STATE OF TEXAS 9941
08/19/2020

CEILING DETAILS

21719
08/19/2020

A342

BID ISSUE

8/19/2020 2:39:06 PM

D:\Revit Locals\LPD_CENTRAL_A19_bcochener_CR-19-2020.rvt

© 2020 Brinkley Sargent Wigginton Architects, Inc.

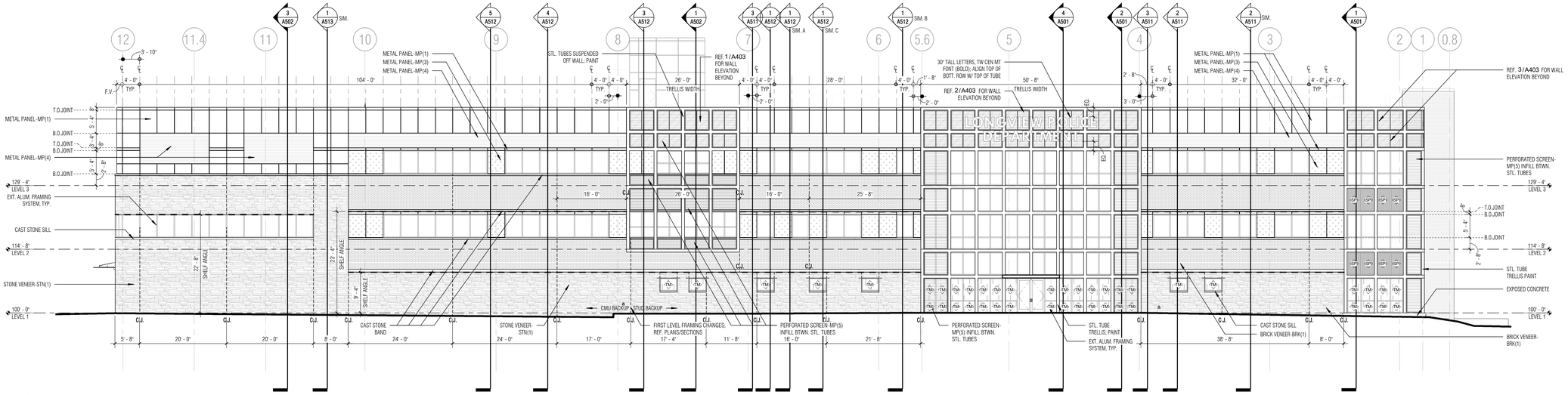

1 NORTH ELEVATION

SCALE: 3/32" = 1'-0"

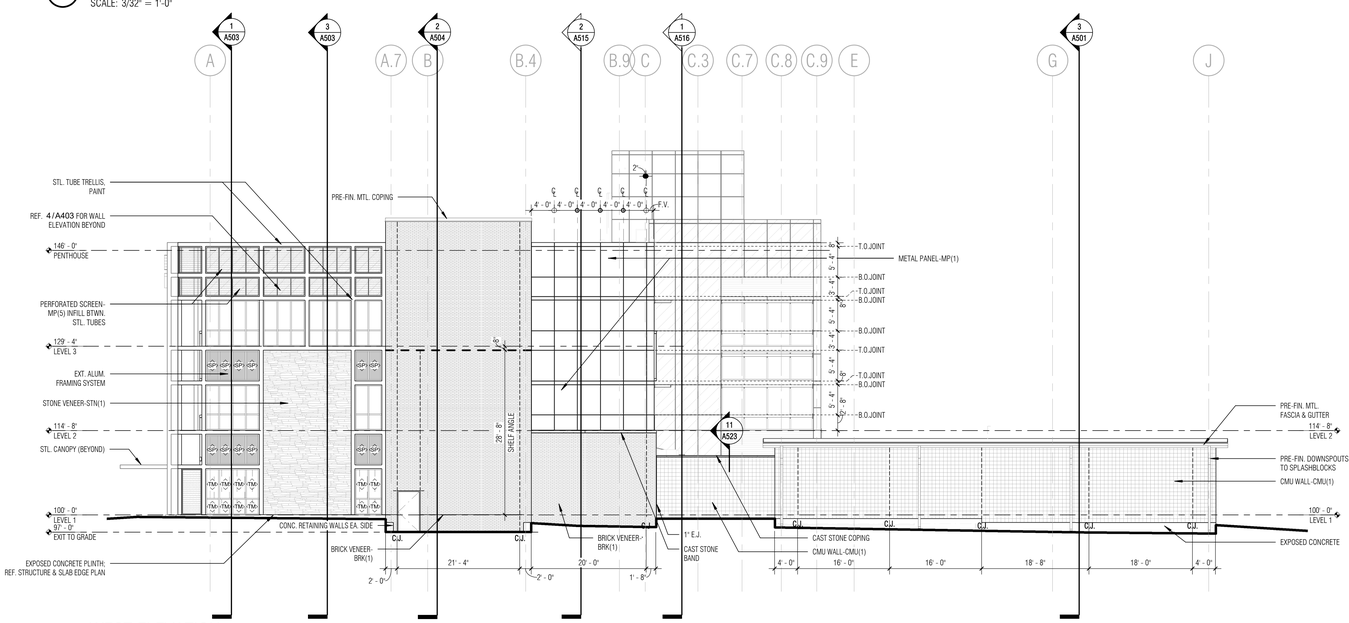

2 WEST ELEVATION

SCALE: 3/32" = 1'-0"

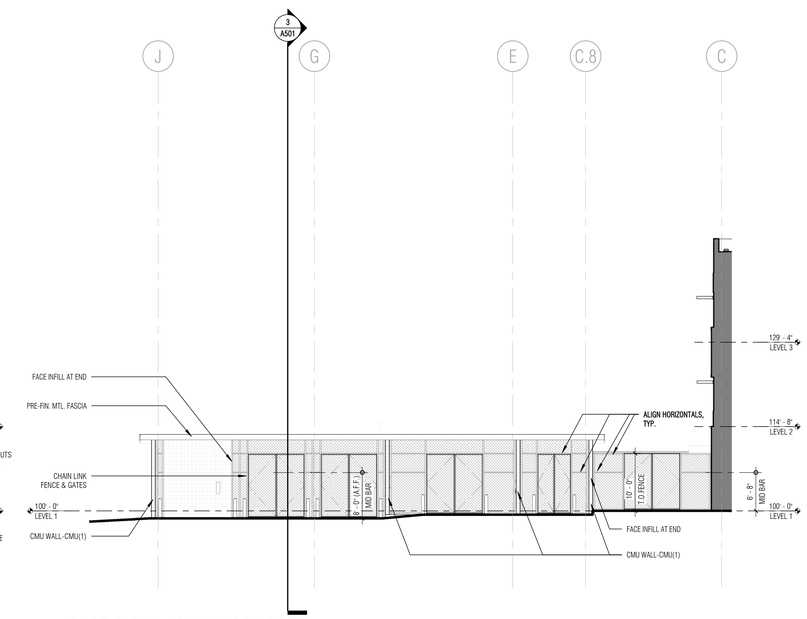

3 EAST ELEVATION (WEST ASSET)

SCALE: 3/32" = 1'-0"

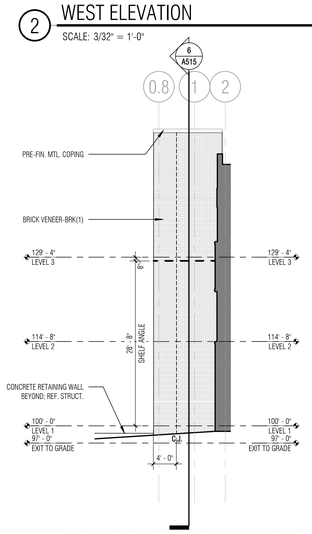

4 SOUTH ELEVATION (EXIT STAIR)

SCALE: 3/32" = 1'-0"

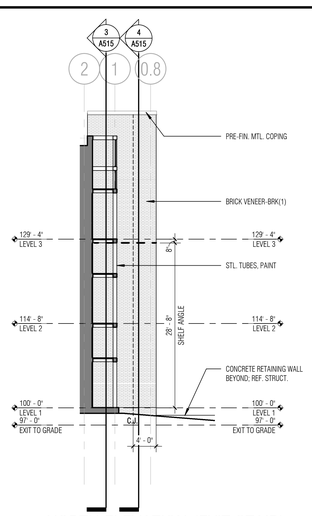

5 NORTH ELEVATION (EXIT STAIR)

SCALE: 3/32" = 1'-0"

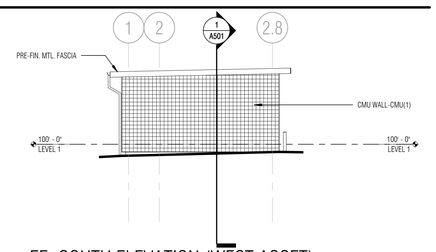

6 EE SOUTH ELEVATION (WEST ASSET)

SCALE: 3/32" = 1'-0"

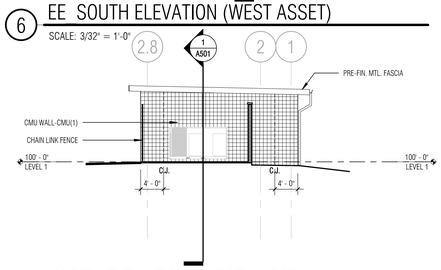

7 NORTH ELEVATION (WEST ASSET)

SCALE: 3/32" = 1'-0"

METAL PANEL LEGEND

PATTERN	TYPE
	METAL PANEL - MP(1) -ACM
	METAL PANEL - MP(2) -ACM
	METAL PANEL - MP(3) -ACM
	METAL PANEL - MP(4) -HORIZONTAL RIBBED METAL PANEL
	METAL PANEL - MP(5) -PERFORATED FLAT ALUMINUM PANEL

SHEET NOTES:
1. REFERENCE SPECIFICATIONS FOR ADDITIONAL INFORMATION / COLOR SELECTION.

GLAZING SCHEDULE (EXTERIOR)

NO.	TYPE
SP	SPANDREL PANEL
T	INSULATED GLAZING
TF	INSULATED GLAZING, FROSTED (#3)
TM	INSULATED GLAZING, CLEAR LAMINATED FOR IMPACT RESISTANCE
TFM	INSULATED GLAZING, COLOR LAMINATED FOR IMPACT RESISTANCE AND OPACITY

SHEET NOTES:
1. ALL EXTERIOR GLAZING TYPE 'T' UNLESS NOTED OTHERWISE

Architect: Brinkley Sargent Wigginton Architects (972) 960-9970
Landscape: Kendall Landscape Architecture (214) 739-3226
Structural: L.A. Fuess Partners, Inc (214) 593-1118
MEP: M-E Engineers (214) 741-1589
Civil: KSA Engineers, Inc (903) 236-7700
Technology: M-E Engineers (303) 421-6656

BRINKLEY SARGENT WIGINTON ARCHITECTS

LONGVIEW POLICE DEPARTMENT

518 W. SOUTH ST. LONGVIEW, TEXAS 75601

HISTORY

#	DATE	DESCRIPTION

REGISTERED ARCHITECT 9941 STATE OF TEXAS
08/19/2020

BUILDING ELEVATIONS

BID ISSUE

21719
08/19/2020

A401

8/21/2020 5:55:25 PM

D:\Revit Local\LPD_CENTRAL_A19_jhoagpenner.rvt

© 2020 Brinkley Sargent Wigginton Architects, Inc.

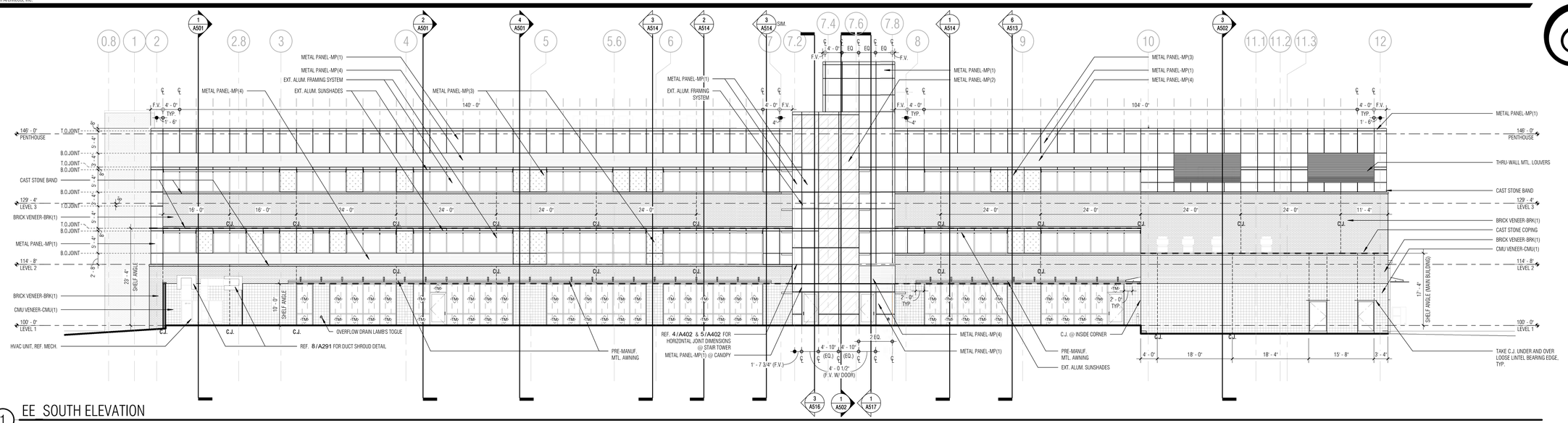

1 EE SOUTH ELEVATION

SCALE: 3/32" = 1'-0"

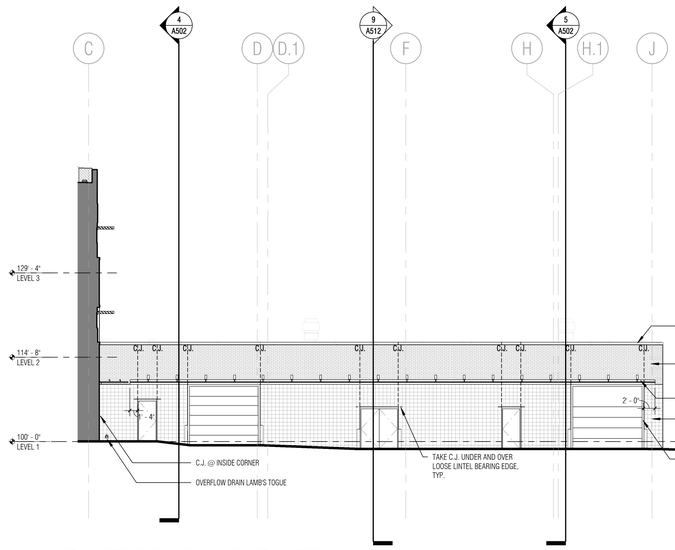

2 EE WEST ELEVATION (EAST ASSET)

SCALE: 3/32" = 1'-0"

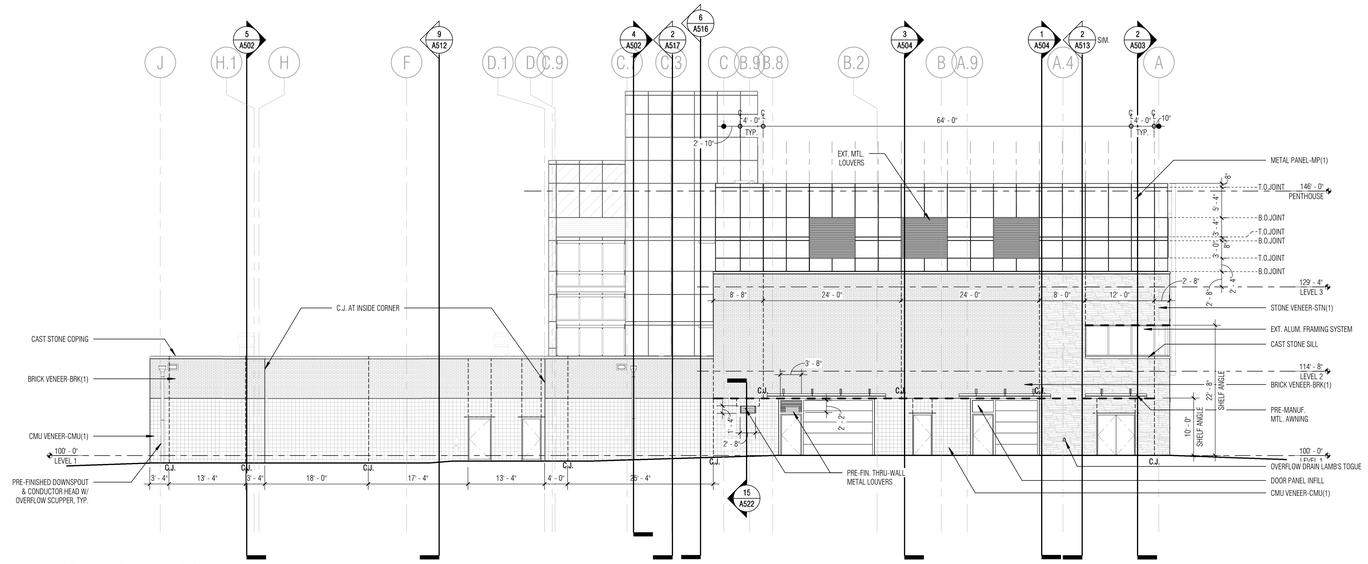

3 EE EAST ELEVATION

SCALE: 3/32" = 1'-0"

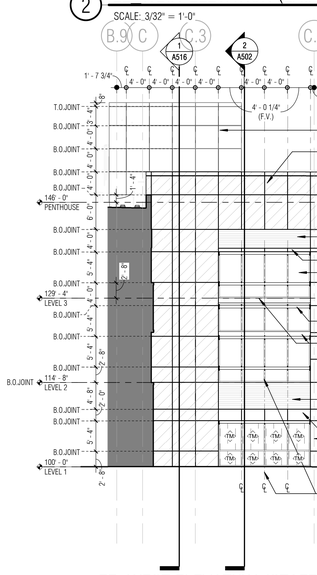

4 EE WEST ELEVATION (STAFF STAIR)

SCALE: 3/32" = 1'-0"

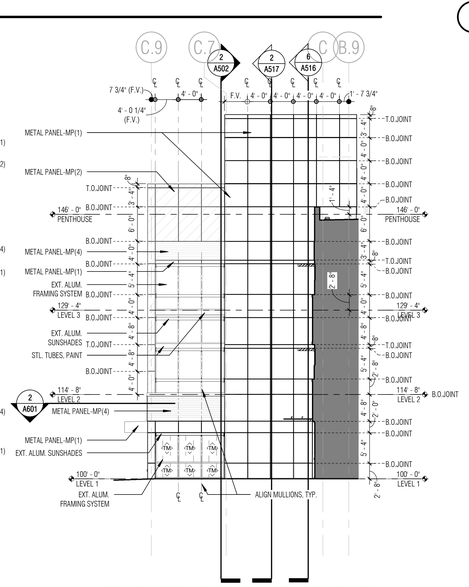

5 EE EAST ELEVATION (STAFF STAIR)

SCALE: 3/32" = 1'-0"

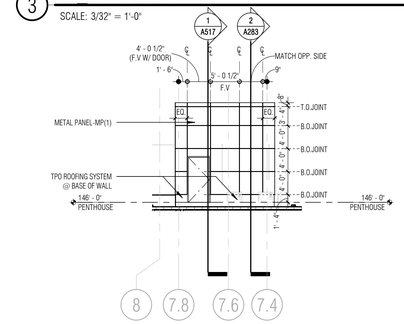

6 EE NORTH ELEVATION (PENTHOUSE)

SCALE: 3/32" = 1'-0"

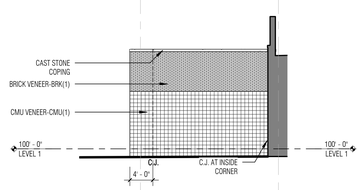

7 EE NORTH ELEVATION (MECH YARD)

SCALE: 3/32" = 1'-0"

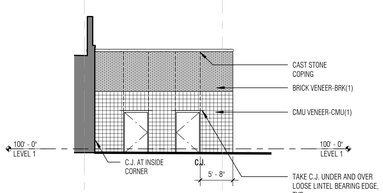

8 EE SOUTH ELEVATION (MECH YARD)

SCALE: 3/32" = 1'-0"

METAL PANEL LEGEND

PATTERN	TYPE
	METAL PANEL - MP(1) -ACM
	METAL PANEL - MP(2) -ACM
	METAL PANEL - MP(3) -ACM
	METAL PANEL - MP(4) -HORIZONTAL RIBBED METAL PANEL
	METAL PANEL - MP(5) -PERFORATED FLAT ALUMINUM PANEL

SHEET NOTES:
1. REFERENCE SPECIFICATIONS FOR ADDITIONAL INFORMATION / COLOR SELECTION.

GLAZING SCHEDULE (EXTERIOR)

NO.	TYPE
SP	SPANDREL PANEL
T	INSULATED GLAZING
TF	INSULATED GLAZING, FROSTED (#3)
TM	INSULATED GLAZING, CLEAR LAMINATED FOR IMPACT RESISTANCE
TFM	INSULATED GLAZING, COLOR LAMINATED FOR IMPACT RESISTANCE AND OPACITY

SHEET NOTES:
1. ALL EXTERIOR GLAZING TYPE 'T' UNLESS NOTED OTHERWISE

LONGVIEW POLICE DEPARTMENT

518 W. SOUTH ST. LONGVIEW, TEXAS 75601

Architect: Brinkley Sargent Wigginton Architects (972) 960-9970
Landscape: Kendall Landscape Architecture (214) 739-3226
Structural: L.A. Fuess Partners, Inc (214) 593-1118
MEP: M-E Engineers (214) 741-1589
Civil: KSA Engineers, Inc (903) 236-7700
Technology: M-E Engineers (303) 421-6656

BRINKLEY SARGENT WIGINTON ARCHITECTS

HISTORY

#	DATE	DESCRIPTION

REGISTERED ARCHITECT HAROLD E. SARGENT 9941 STATE OF TEXAS 08/19/2020

BUILDING ELEVATIONS

BID ISSUE

21719
08/19/2020
A402

D:\Revit Local\LPD_CENTRAL_R19_rhoneyman.rvt

8/20/2020 2:35:49 PM

© 2020 Brinkley Sargent Wigginton Architects, Inc.

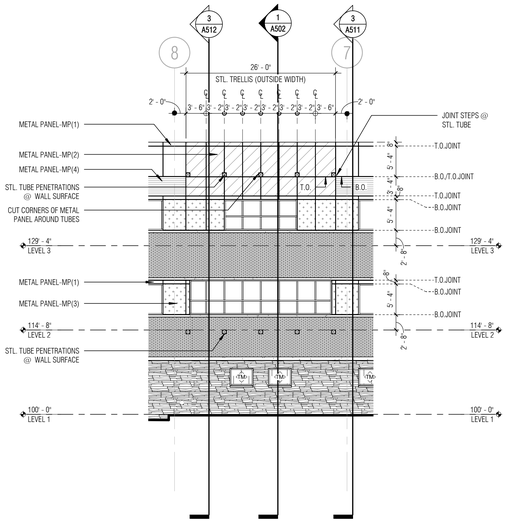

1 NORTH ELEVATION - METAL PANEL @ GRIDS 7-8

SCALE: 3/32" = 1'-0"

FOR ADDITIONAL INFORMATION REFERENCE: 1/A401

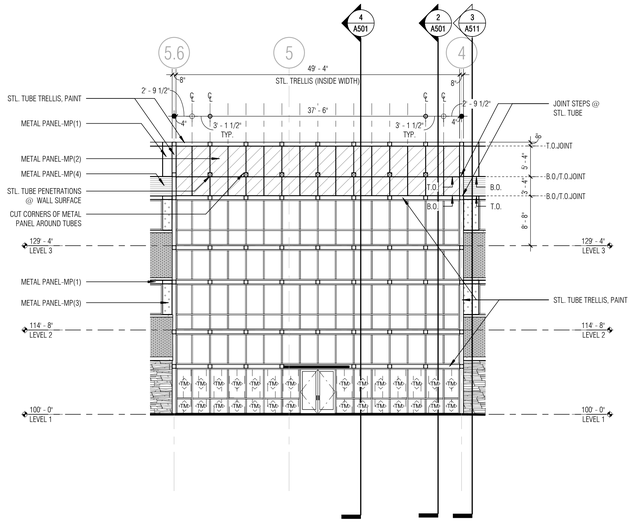

2 NORTH ELEVATION - METAL PANEL @ GRIDS 4-5.6

SCALE: 3/32" = 1'-0"

FOR ADDITIONAL INFORMATION REFERENCE: 1/A401

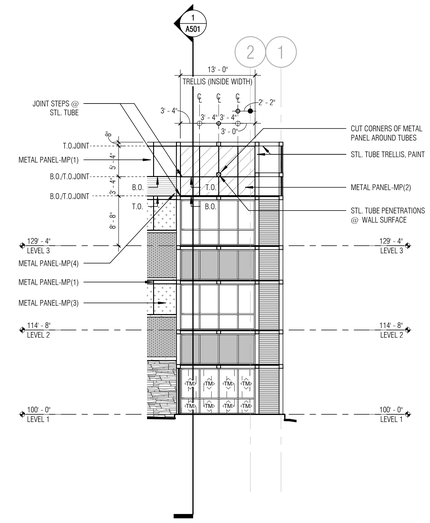

3 NORTH ELEVATION - METAL PANEL @ GRID 2

SCALE: 3/32" = 1'-0"

FOR ADDITIONAL INFORMATION REFERENCE: 1/A401

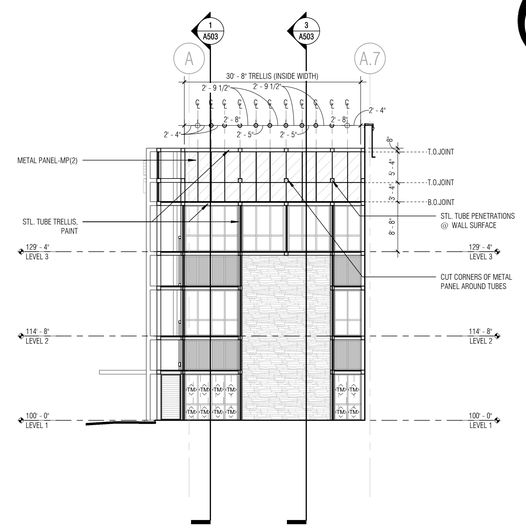

4 WEST METAL PANEL ELEVATION @ GRIDS A-A.7

SCALE: 3/32" = 1'-0"

FOR ADDITIONAL INFORMATION REFERENCE: 2/A401

BRINKLEY SARGENT WIGGINTON ARCHITECTS

Architect: Brinkley Sargent Wigginton Architects (972) 960-9970
Landscape: Kendall Landscape Architecture (214) 739-3226
Structural: L.A. Fuess Partners, Inc (214) 593-1118
MEP: M-E Engineers (214) 741-1589
Civil: KSA Engineers, Inc (903) 236-7700
Technology: M-E Engineers (303) 421-6656

LONGVIEW POLICE DEPARTMENT

518 W. SOUTH ST. LONGVIEW, TEXAS 75601

HISTORY

#	DATE	DESCRIPTION

08/19/2020

BUILDING ELEVATIONS

21719
08/19/2020

A403

BID ISSUE

5/20/2020 2:37:56 PM

S:\Revit Locals\Pb_CENTRAL_A19_Moneypenny.rvt

© 2020 Brinkley Sargent Wigginton Architects, Inc.

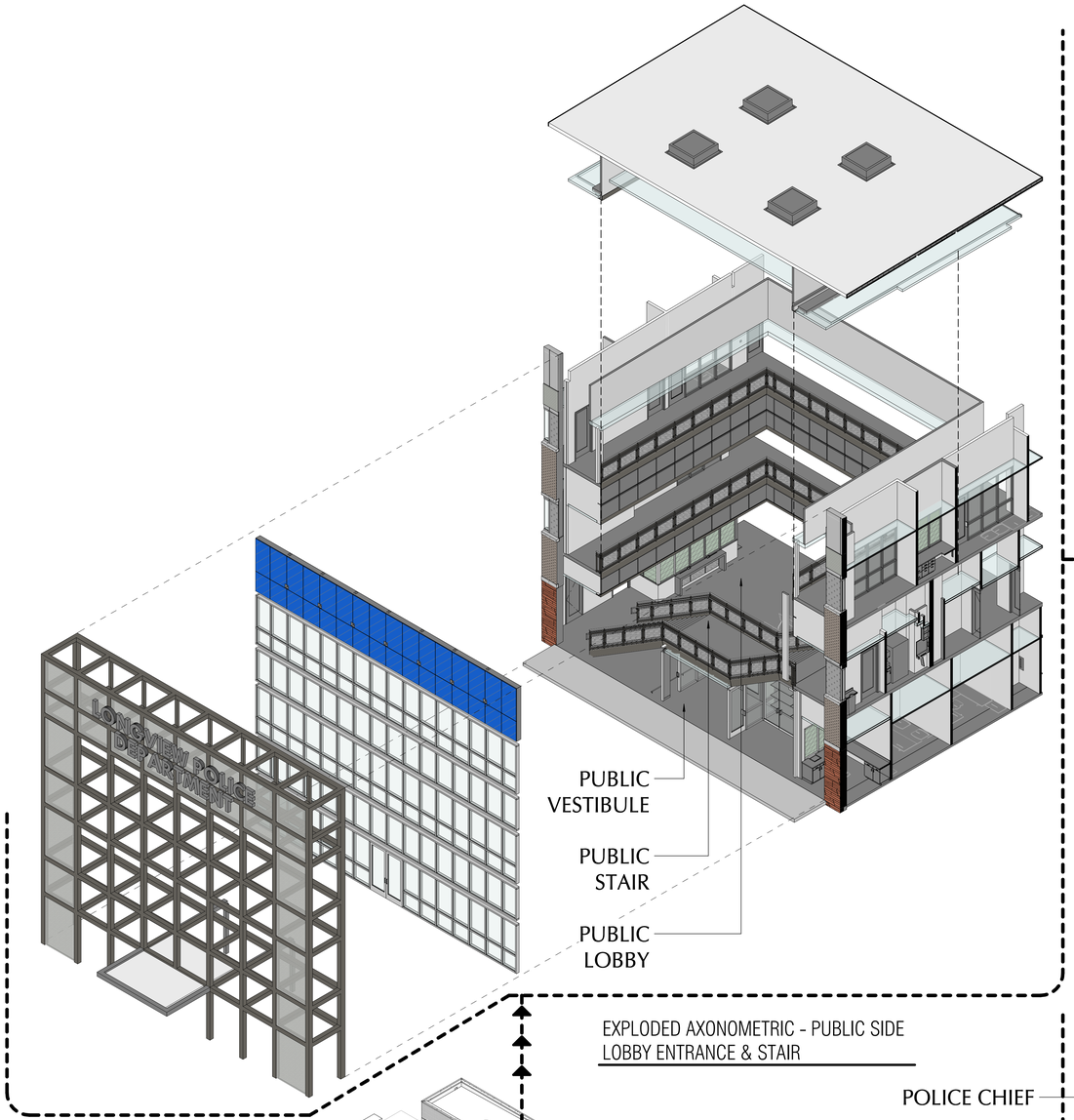

EXPLODED AXONOMETRIC - PUBLIC SIDE LOBBY ENTRANCE & STAIR

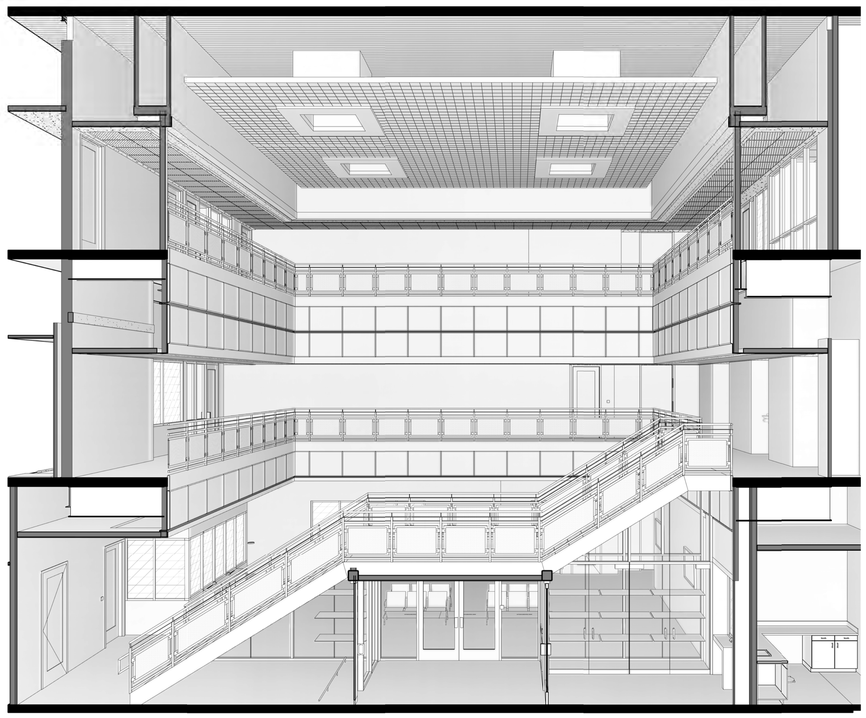

SECTION PERSPECTIVE - PUBLIC LOBBY

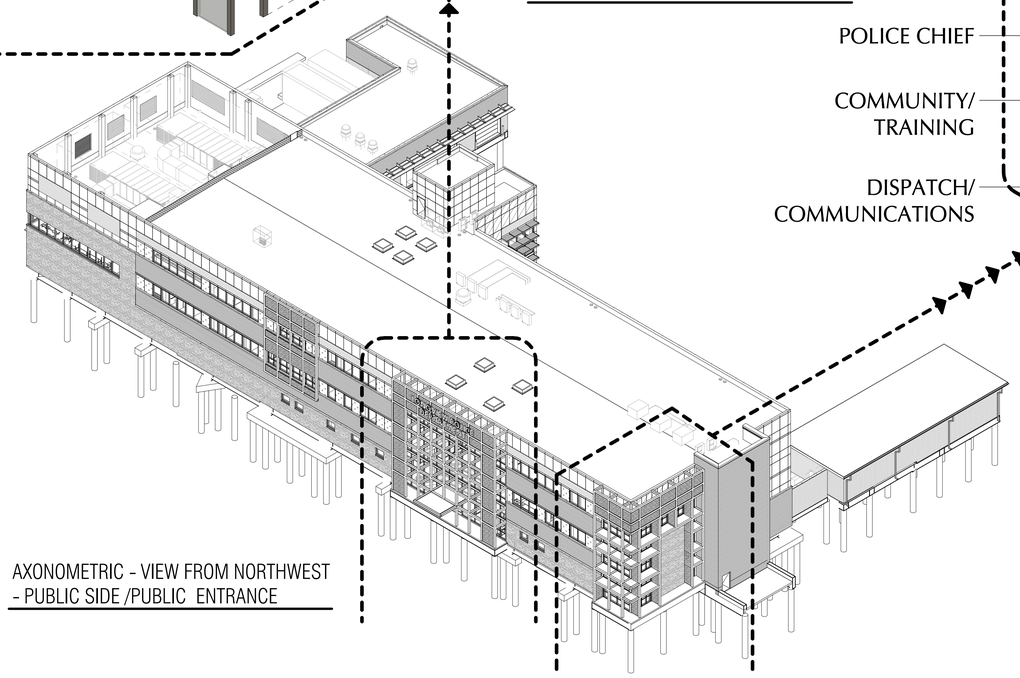

AXONOMETRIC - VIEW FROM NORTHWEST - PUBLIC SIDE /PUBLIC ENTRANCE

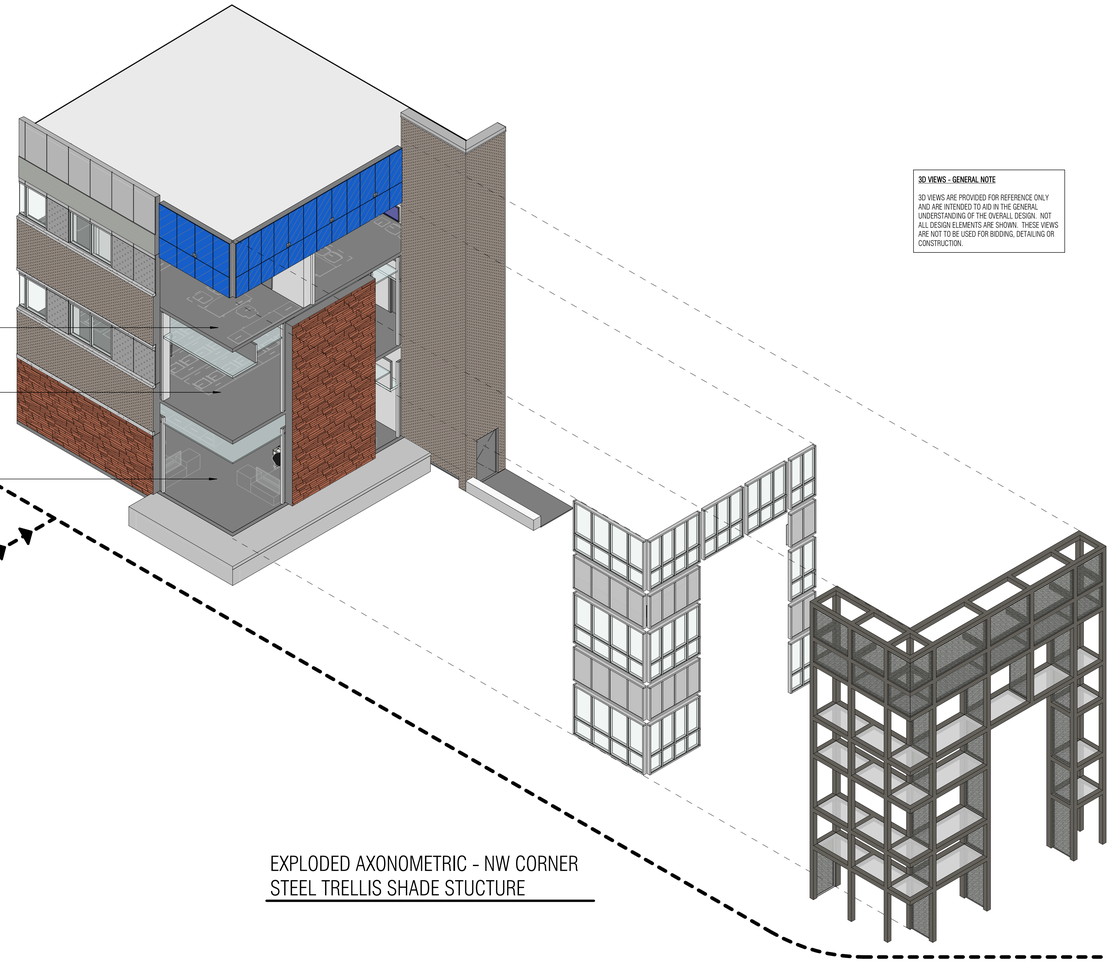

EXPLODED AXONOMETRIC - NW CORNER STEEL TRELLIS SHADE STUCTURE

3D VIEWS - GENERAL NOTE

3D VIEWS ARE PROVIDED FOR REFERENCE ONLY AND ARE INTENDED TO AID IN THE GENERAL UNDERSTANDING OF THE OVERALL DESIGN. NOT ALL DESIGN ELEMENTS ARE SHOWN. THESE VIEWS ARE NOT TO BE USED FOR BIDDING, DETAILING OR CONSTRUCTION.

Architect: Brinkley Sargent Wigginton Architects (972) 960-9970
Landscape: Kendall Landscape Architecture (214) 739-3226
Structural: L.A. Fuess Partners, Inc (214) 593-1118
MEP: M-E Engineers (214) 741-1589
Civil: KSA Engineers, Inc (903) 236-7700
Technology: M-E Engineers (303) 421-6656

BRINKLEY SARGENT WIGGINTON ARCHITECTS

LONGVIEW POLICE DEPARTMENT

518 W. SOUTH ST. LONGVIEW, TEXAS 75601

HISTORY

#	DATE	DESCRIPTION

08/19/2020

3D - PUBLIC LOBBY & NW CORNER TRELLIS - EXPLODED AXONOMETRIC

21719
08/19/2020

A411

BID ISSUE

8/19/2020 2:43:55 PM

D:\Revit Locals\LPD_CENTRAL_A19_bcoomer_08-19-2020.rvt

© 2020 Brinkley Sargent Wigginton Architects, Inc.

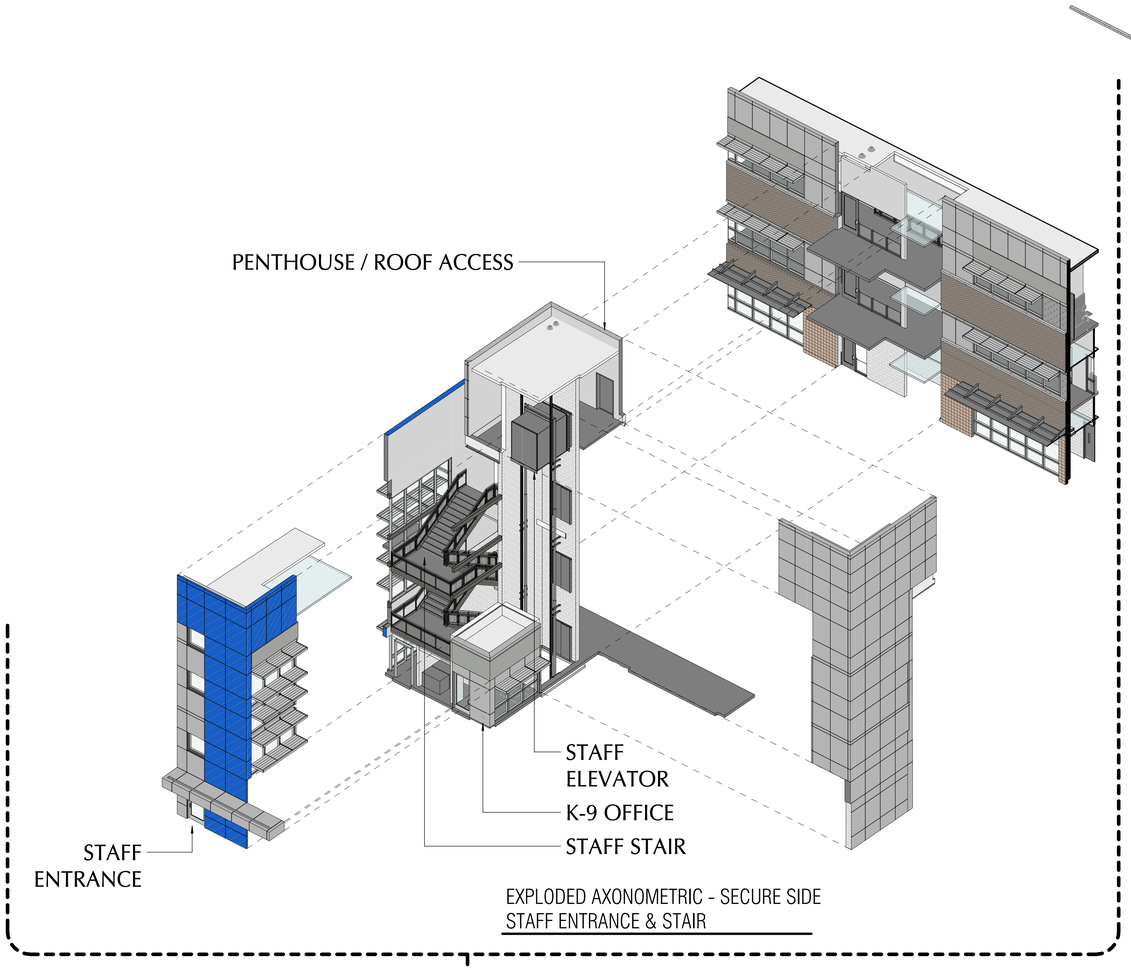

EXPLODED AXONOMETRIC - SECURE SIDE
STAFF ENTRANCE & STAIR

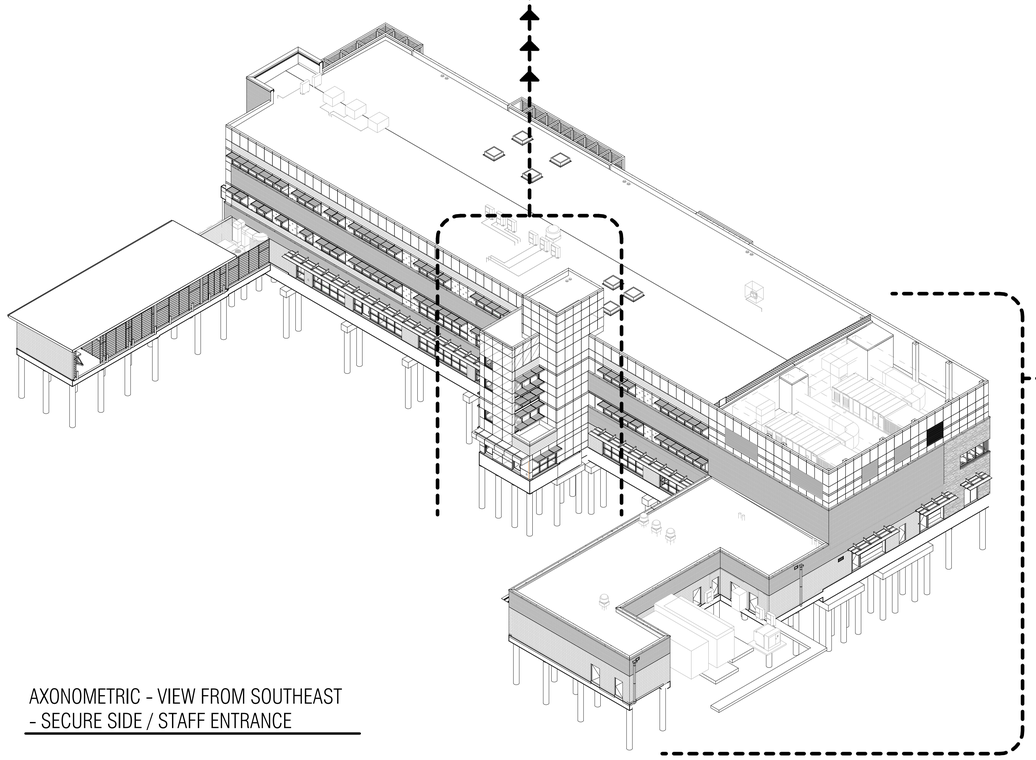

AXONOMETRIC - VIEW FROM SOUTHEAST
- SECURE SIDE / STAFF ENTRANCE

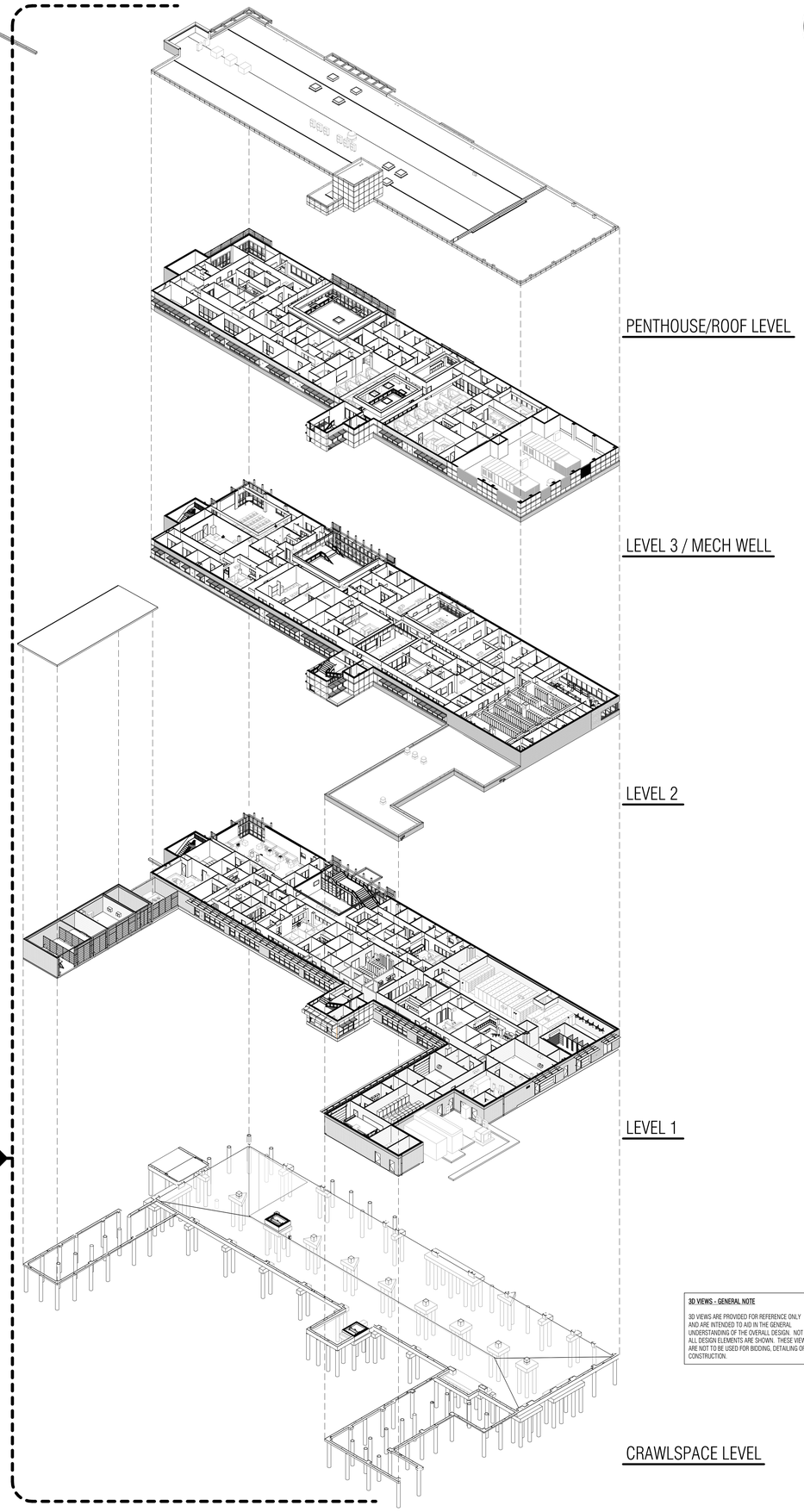

3D VIEWS - GENERAL NOTE

3D VIEWS ARE PROVIDED FOR REFERENCE ONLY AND ARE INTENDED TO AID IN THE GENERAL UNDERSTANDING OF THE OVERALL DESIGN. NOT ALL DESIGN ELEMENTS ARE SHOWN. THESE VIEWS ARE NOT TO BE USED FOR BIDDING, DETAILING OR CONSTRUCTION.

Architect: Brinkley Sargent Wigginton Architects (972) 960-9970
Landscape: Kendall Landscape Architecture (214) 739-3226
Structural: L.A. Fuess Partners, Inc (214) 593-1118
MEP: M-E Engineers (214) 741-1589
Civil: KSA Engineers, Inc (903) 236-7700
Technology: M-E Engineers (303) 421-6656

BRINKLEY SARGENT WIGINTON ARCHITECTS

LONGVIEW POLICE DEPARTMENT

518 W. SOUTH ST. LONGVIEW, TEXAS 75601

HISTORY

#	DATE	DESCRIPTION

REGISTERED ARNOLD SARGENT ARCHITECT 9941 STATE OF TEXAS
08/19/2020

3D - BUILDING & STAFF STAIR - EXPLODED AXONOMETRIC

21719
08/19/2020

A412

BID ISSUE

D:\Revit Models\LPD_CENTRAL_A19_bscanner_08-18-2020.rvt 8/18/2020 2:46:41 PM

© 2020 Brinkley Sargent Wigginton Architects, Inc.

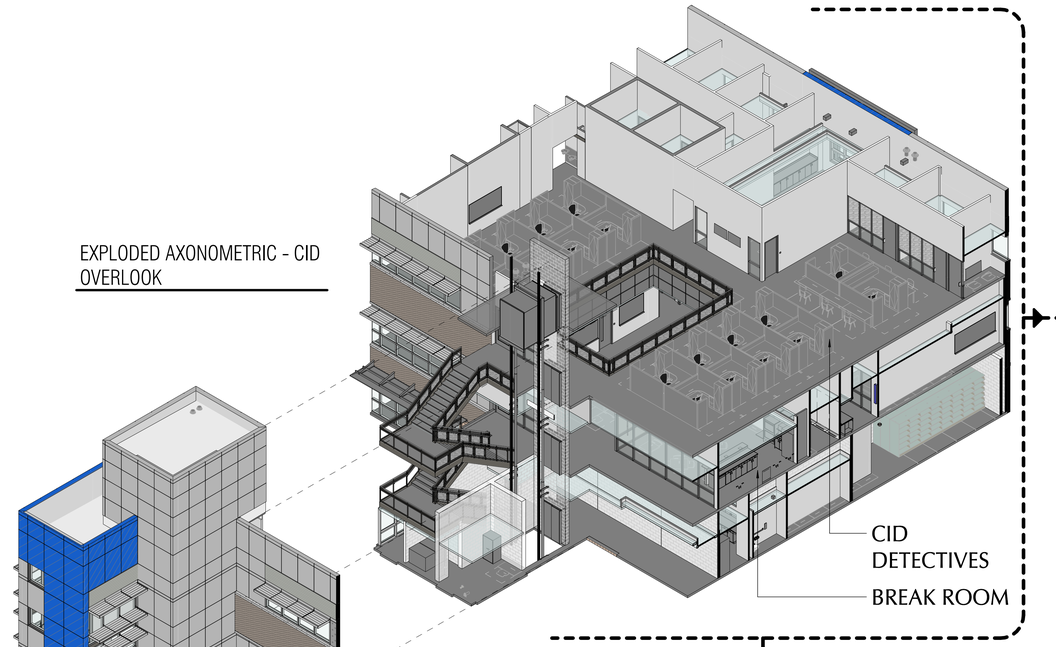

EXPLODED AXONOMETRIC - CID OVERLOOK

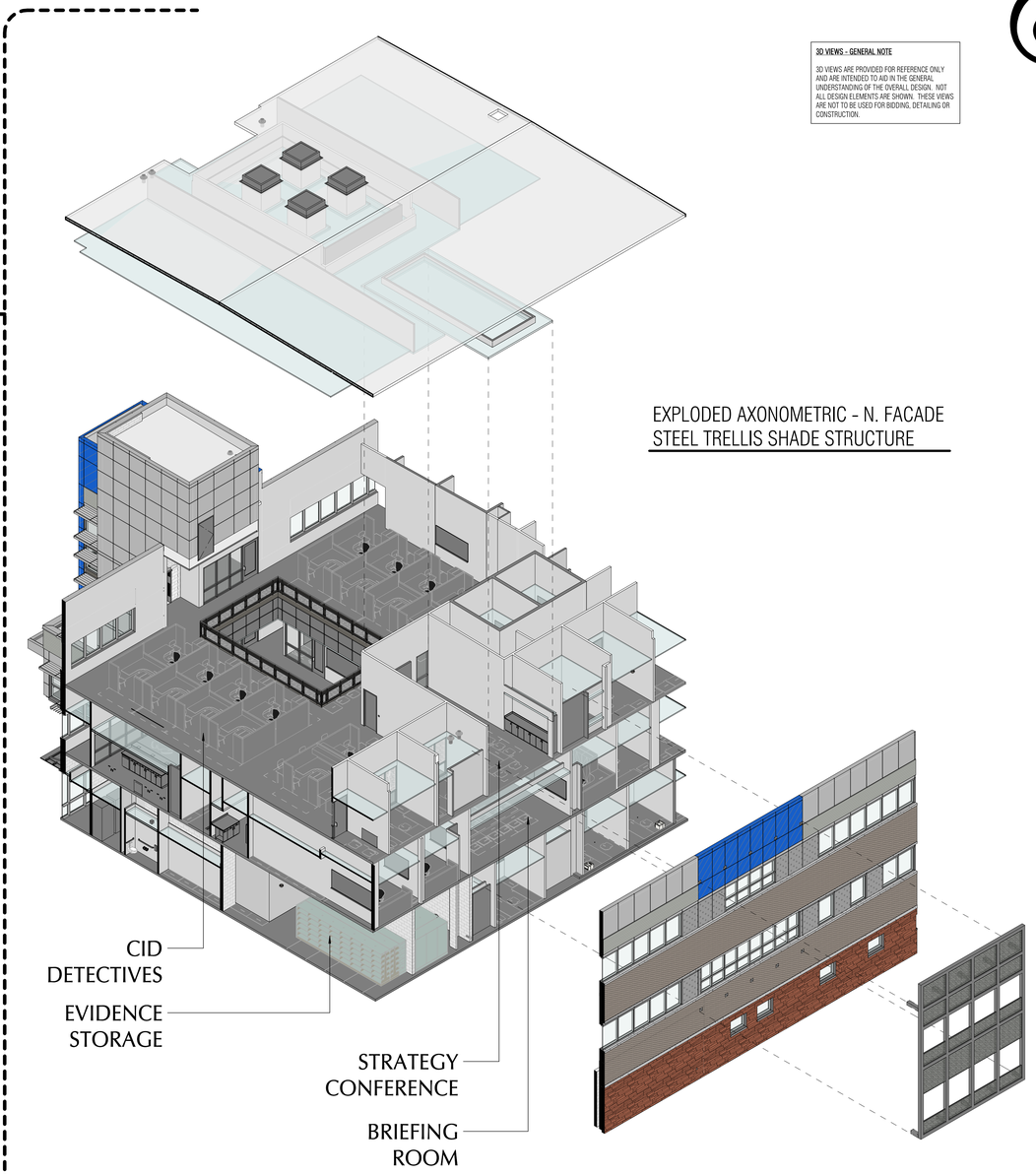

EXPLODED AXONOMETRIC - N. FACADE STEEL TRELLIS SHADE STRUCTURE

3D VIEWS - GENERAL NOTE

3D VIEWS ARE PROVIDED FOR REFERENCE ONLY AND ARE INTENDED TO AID IN THE GENERAL UNDERSTANDING OF THE OVERALL DESIGN. NOT ALL DESIGN ELEMENTS ARE SHOWN. THESE VIEWS ARE NOT TO BE USED FOR BIDDING, DETAILING OR CONSTRUCTION.

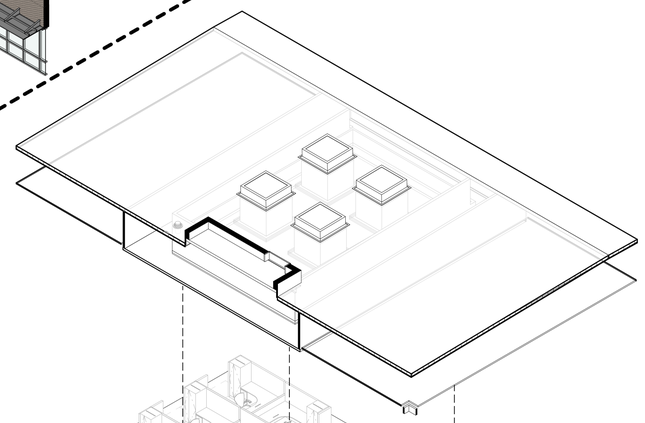

ROOF / SKYLIGHTS

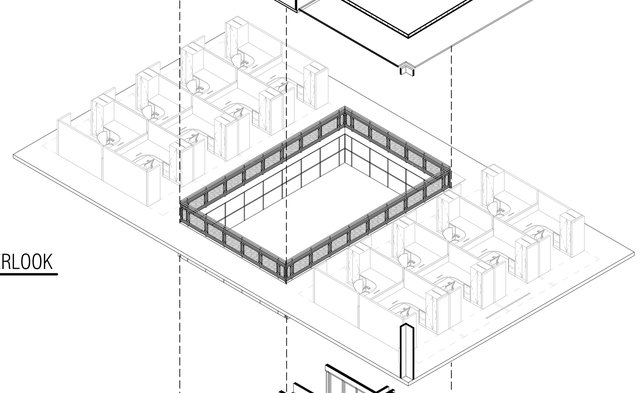

LEVEL 3 - DETECTIVES / OVERLOOK

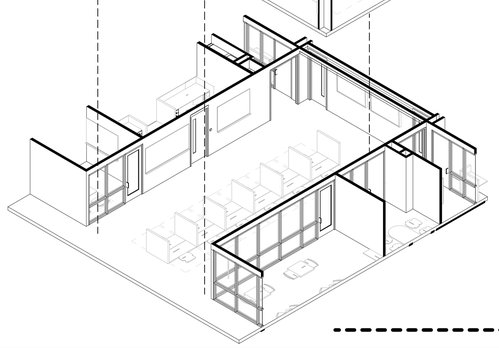

LEVEL 2 - REPORT WRITING

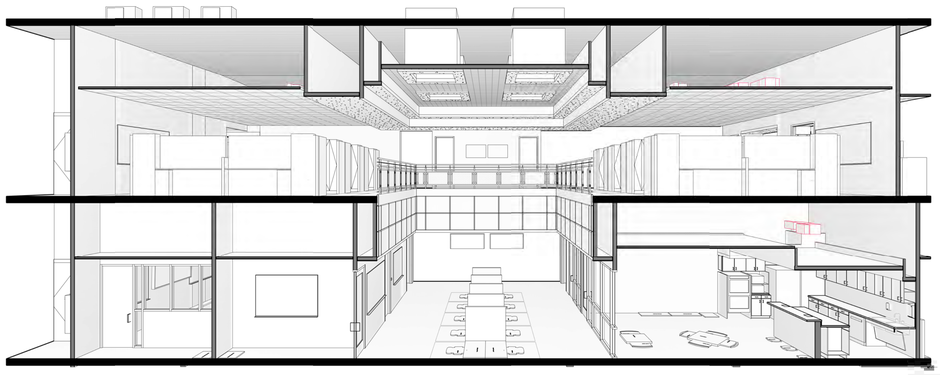

SECTION PERSPECTIVE - CID OVERLOOK

Architect: Brinkley Sargent Wigginton Architects (972) 960-9970
Landscape: Kendall Landscape Architecture (214) 739-3226
Structural: L.A. Fuess Partners, Inc (214) 593-1118
MEP: M-E Engineers (214) 741-1589
Civil: KSA Engineers, Inc (903) 236-7700
Technology: M-E Engineers (303) 421-6656

BRINKLEY SARGENT WIGINTON ARCHITECTS

LONGVIEW POLICE DEPARTMENT

518 W. SOUTH ST. LONGVIEW, TEXAS 75601

HISTORY

#	DATE	DESCRIPTION

REGISTERED ARCHITECT STATE OF TEXAS 08/19/2020

3D - CID OVERLOOK - EXPLODED AXONOMETRIC

21719
08/19/2020
A413

BID ISSUE

© 2020 Brinkley Sargent Wigginton Architects, Inc.

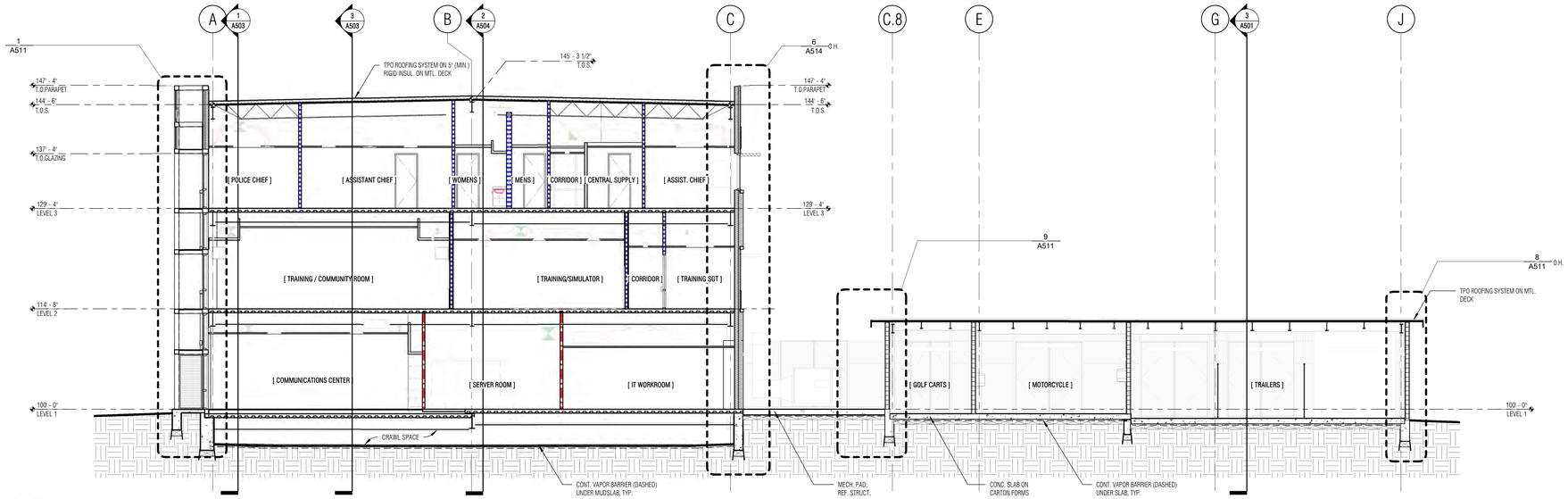

1 BUILDING SECTION
SCALE: 1/8" = 1'-0"

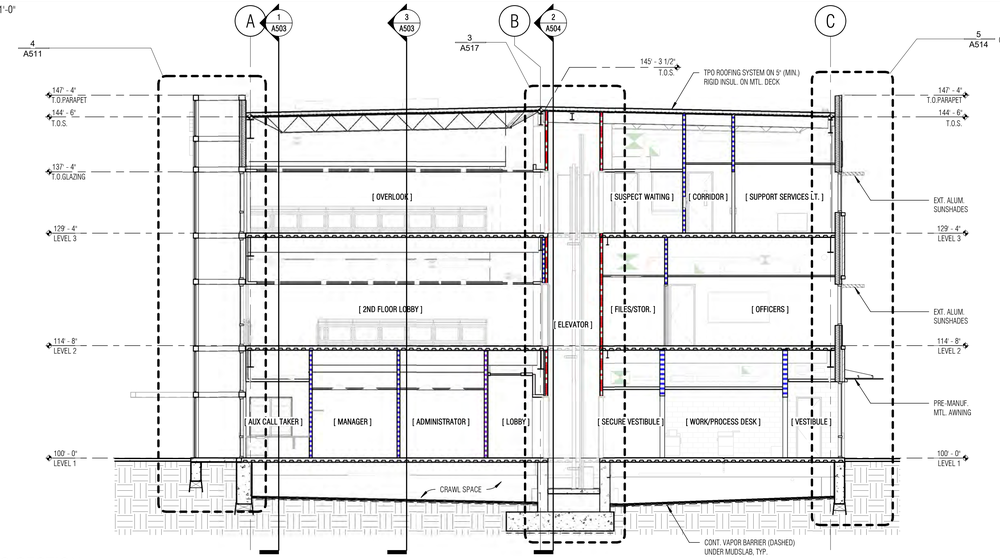

2 BUILDING SECTION
SCALE: 1/8" = 1'-0"

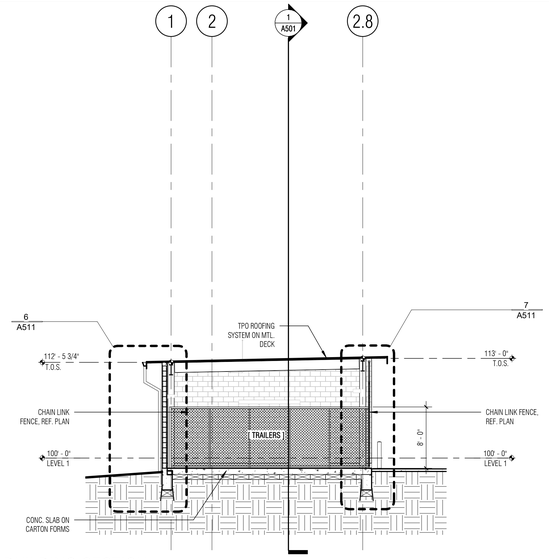

3 BUILDING SECTION
SCALE: 1/8" = 1'-0"

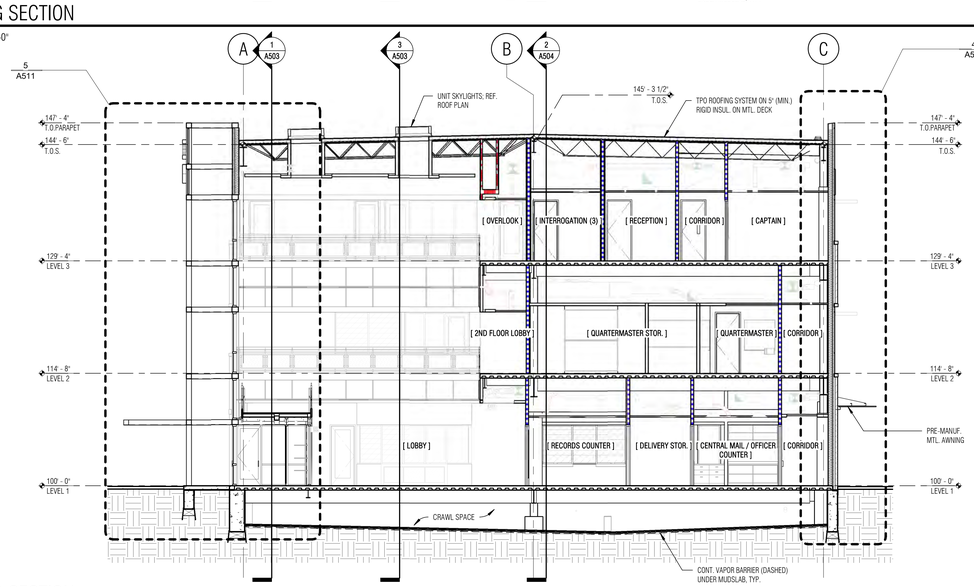

4 BUILDING SECTION
SCALE: 1/8" = 1'-0"

Architect: Brinkley Sargent Wigginton Architects (972) 960-9970
Landscape: Kendall Landscape Architecture (214) 739-3226
Structural: L.A. Fuess Partners, Inc (214) 593-1118
MEP: M-E Engineers (214) 741-1589
Civil: KSA Engineers, Inc (903) 236-7700
Technology: M-E Engineers (303) 421-6656

BRINKLEY SARGENT WIGINTON ARCHITECTS

LONGVIEW POLICE DEPARTMENT

518 W. SOUTH ST. LONGVIEW, TEXAS 75601

HISTORY

#	DATE	DESCRIPTION

REGISTERED ARCHITECT STATE OF TEXAS 9941 08/19/2020

BUILDING SECTIONS

BID ISSUE

21719
08/19/2020

A501

8/19/2020 2:51:00 PM

D:\Revit Local\LPD_CENTRAL_A19_boschner_09-19-2020.rvt

© 2020 Brinkley Sargent Wigginton Architects, Inc.

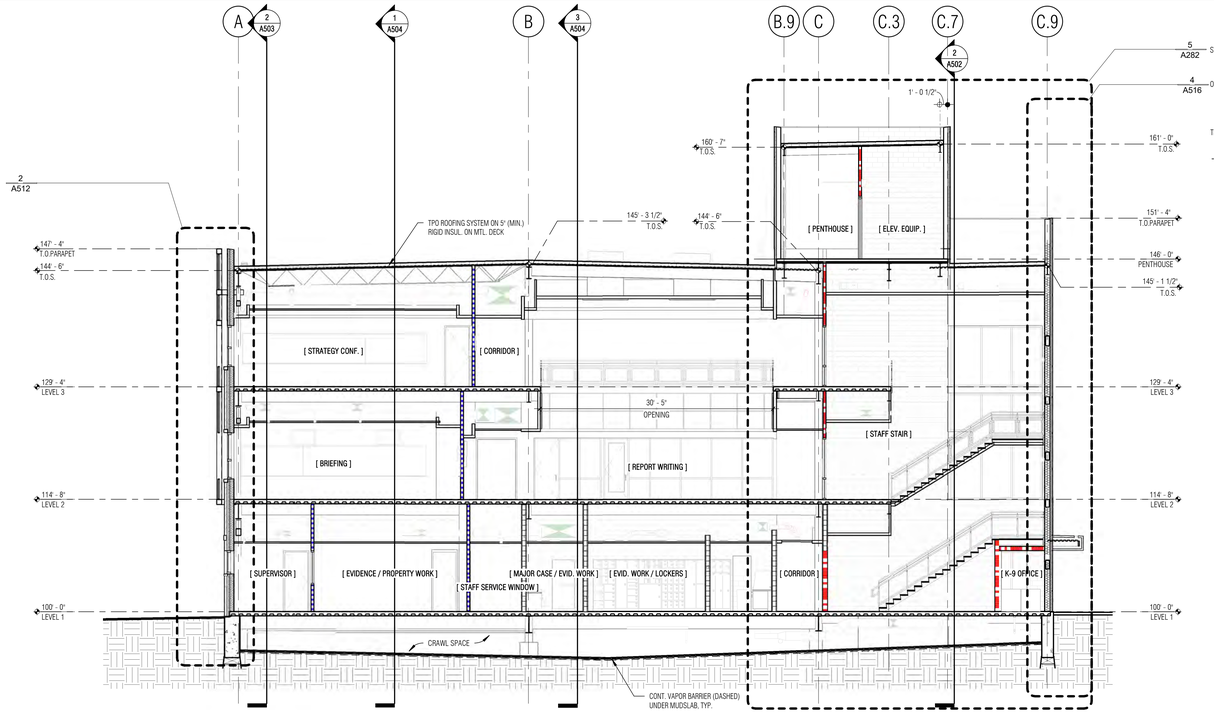

1 BUILDING SECTION
SCALE: 1/8" = 1'-0"

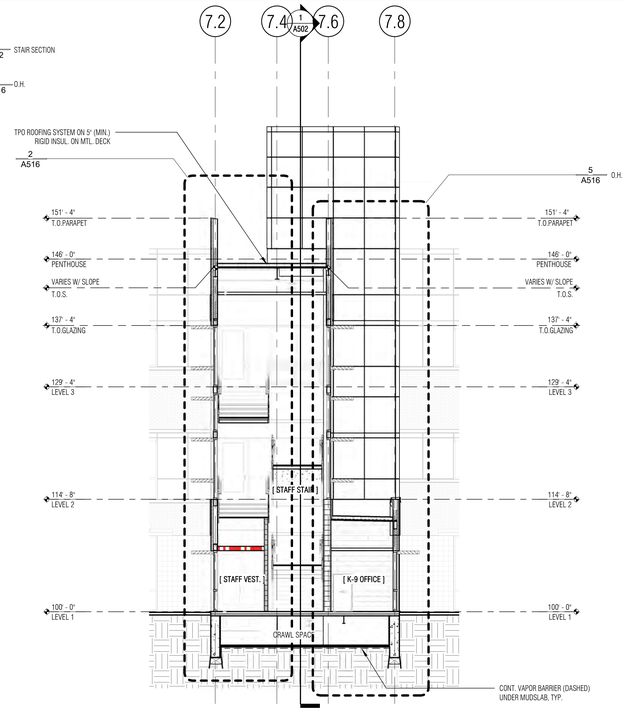

2 BUILDING SECTION
SCALE: 1/8" = 1'-0"

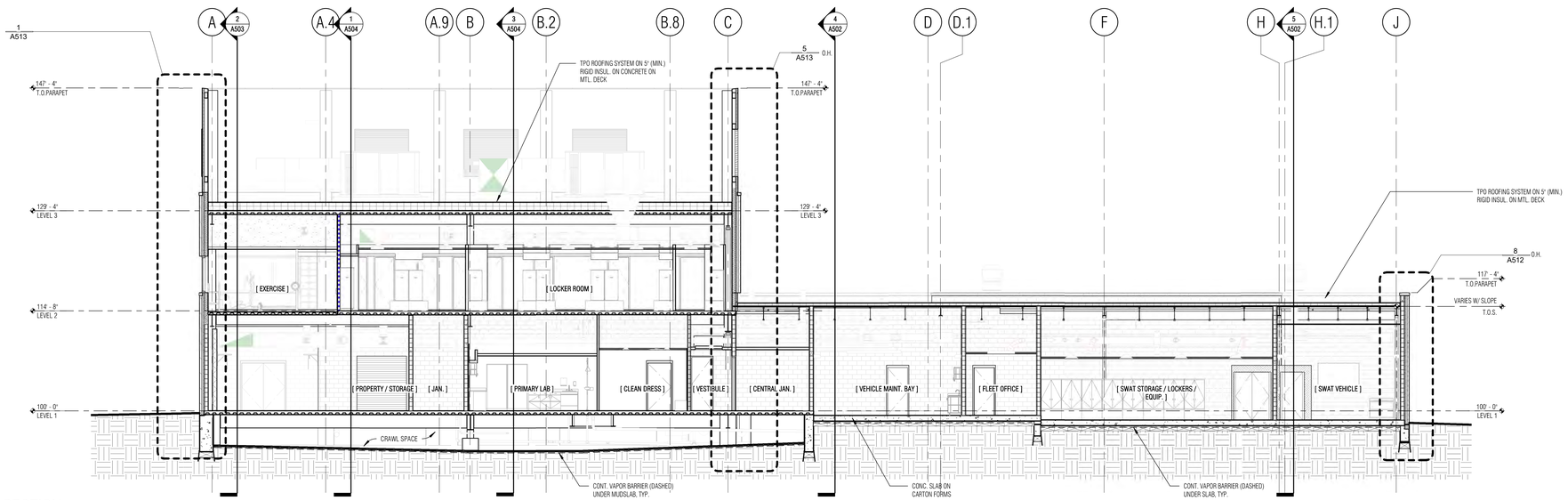

3 BUILDING SECTION
SCALE: 1/8" = 1'-0"

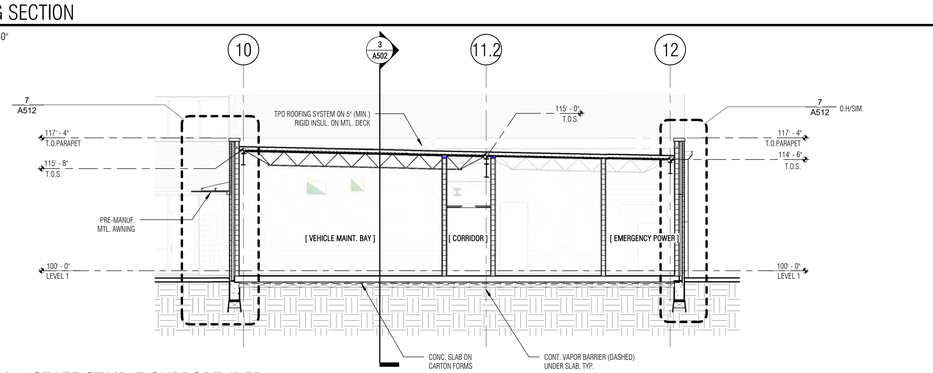

4 BS E-W 04 STAFF STAIR-E SUPPORT (DEP
SCALE: 1/8" = 1'-0"

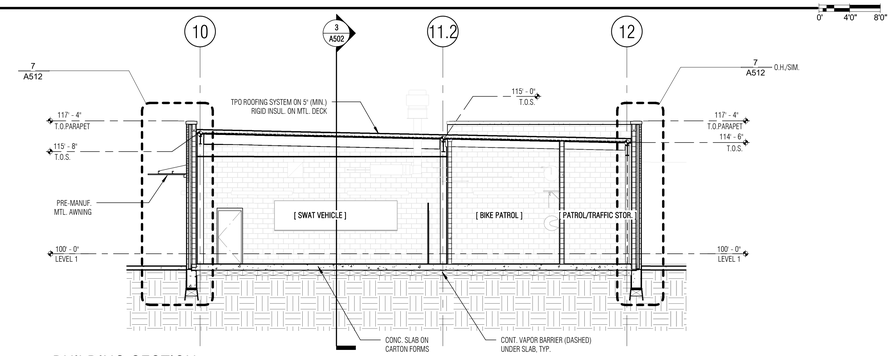

5 BUILDING SECTION
SCALE: 1/8" = 1'-0"

BRINKLEY SARGENT WIGINTON ARCHITECTS

Architect: Brinkley Sargent Wigginton Architects (972) 960-9970
Landscape: Kendall Landscape Architecture (214) 739-3226
Structural: L.A. Fuess Partners, Inc (214) 593-1118
MEP: M-E Engineers (214) 741-1589
Civil: KSA Engineers, Inc (903) 236-7700
Technology: M-E Engineers (303) 421-6656

LONGVIEW POLICE DEPARTMENT

518 W. SOUTH ST. LONGVIEW, TEXAS 75601

HISTORY		
#	DATE	DESCRIPTION

REGISTERED ARCHITECT STATE OF TEXAS 9941
08/19/2020

BUILDING SECTIONS

21719
08/19/2020

A502

BID ISSUE

8/19/2020 4:12:36 PM

D:\Revit Locals\LPD_CENTRAL_A19_bcochran_CR-19-2020.rvt

© 2020 Brinkley Sargent Wigginton Architects, Inc.

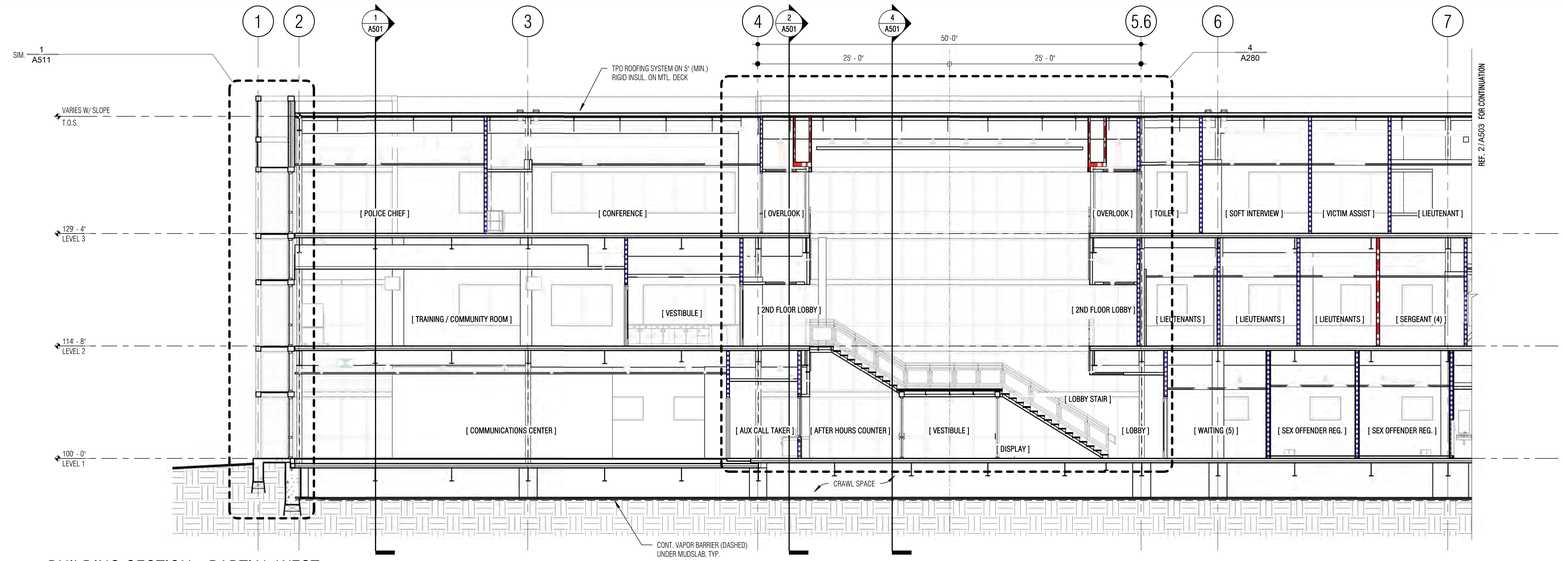

1 BUILDING SECTION - PARTIAL WEST

SCALE: 1/8" = 1'-0"

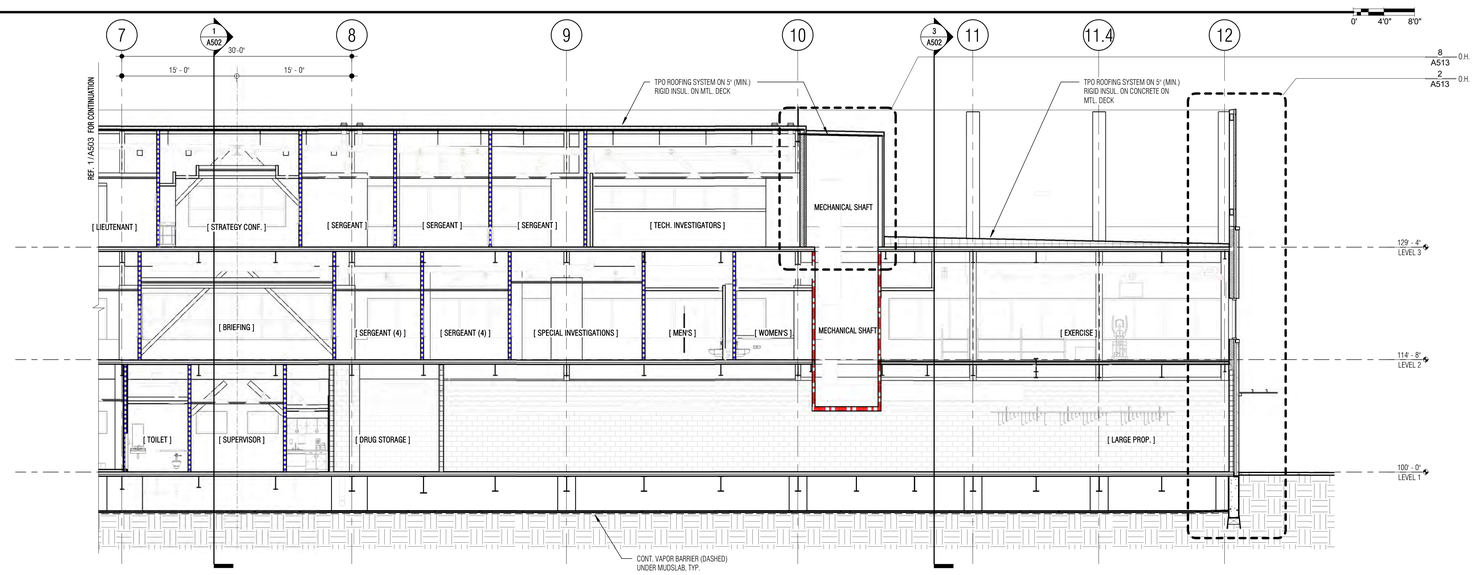

2 BUILDING SECTION - PARTIAL EAST

SCALE: 1/8" = 1'-0"

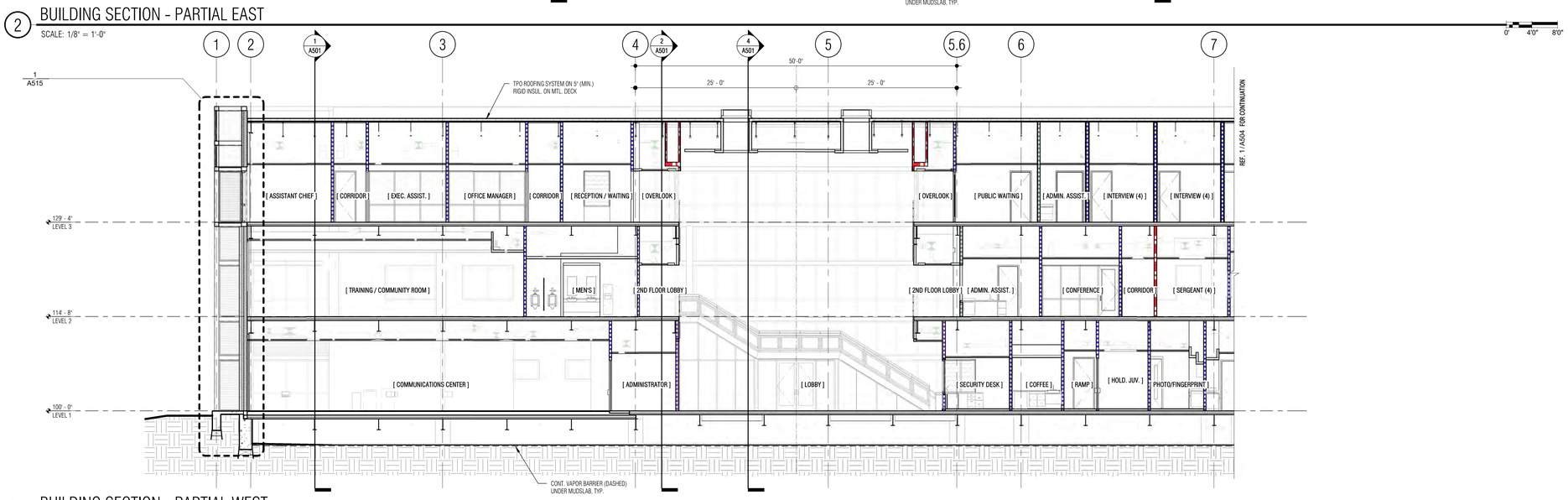

3 BUILDING SECTION - PARTIAL WEST

SCALE: 1/8" = 1'-0"

Architect: Brinkley Sargent Wigginton Architects (972) 960-9970
Landscape: Kendall Landscape Architecture (214) 739-3226
Structural: L.A. Fuess Partners, Inc (214) 593-1118
MEP: M-E Engineers (214) 741-1589
Civil: KSA Engineers, Inc (903) 236-7700
Technology: M-E Engineers (303) 421-6656

BRINKLEY SARGENT WIGINTON ARCHITECTS

LONGVIEW POLICE DEPARTMENT

518 W. SOUTH ST. LONGVIEW, TEXAS 75601

HISTORY

#	DATE	DESCRIPTION

REGISTERED ARCHITECT 3941 STATE OF TEXAS
08/19/2020

BUILDING SECTIONS

21719
08/19/2020

A503

BID ISSUE

8/19/2020 3:05:55 PM

D:\Revit Local\LPD_CENTRAL_419_Jacobsen_08-19-2020.rvt

© 2020 Brinkley Sargent Wigginton Architects, Inc.

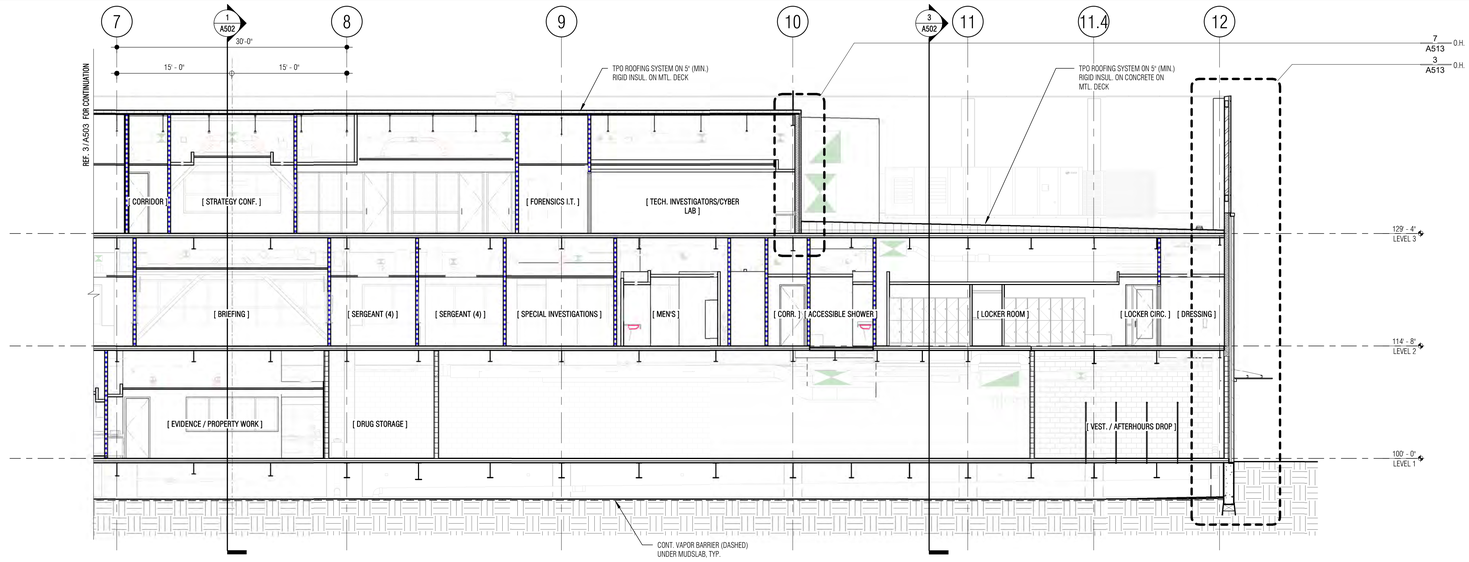

1 BUILDING SECTION - PARTIAL EAST

SCALE: 1/8" = 1'-0"

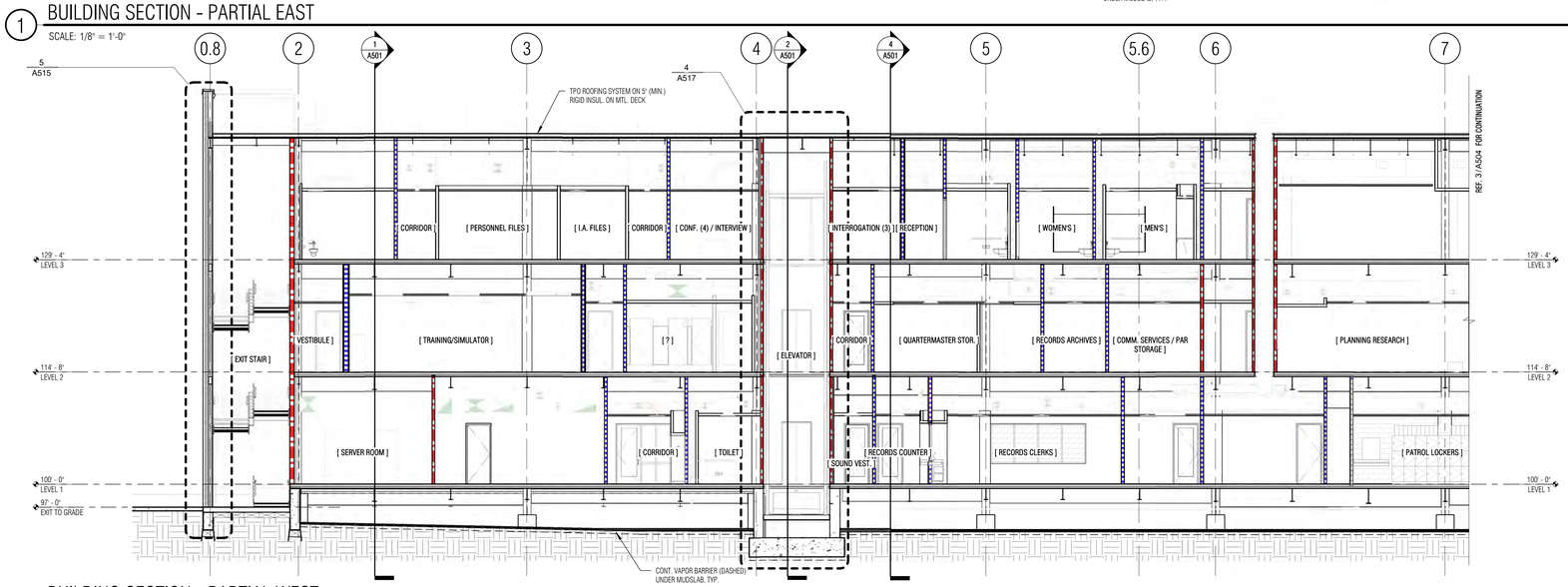

2 BUILDING SECTION - PARTIAL WEST

SCALE: 1/8" = 1'-0"

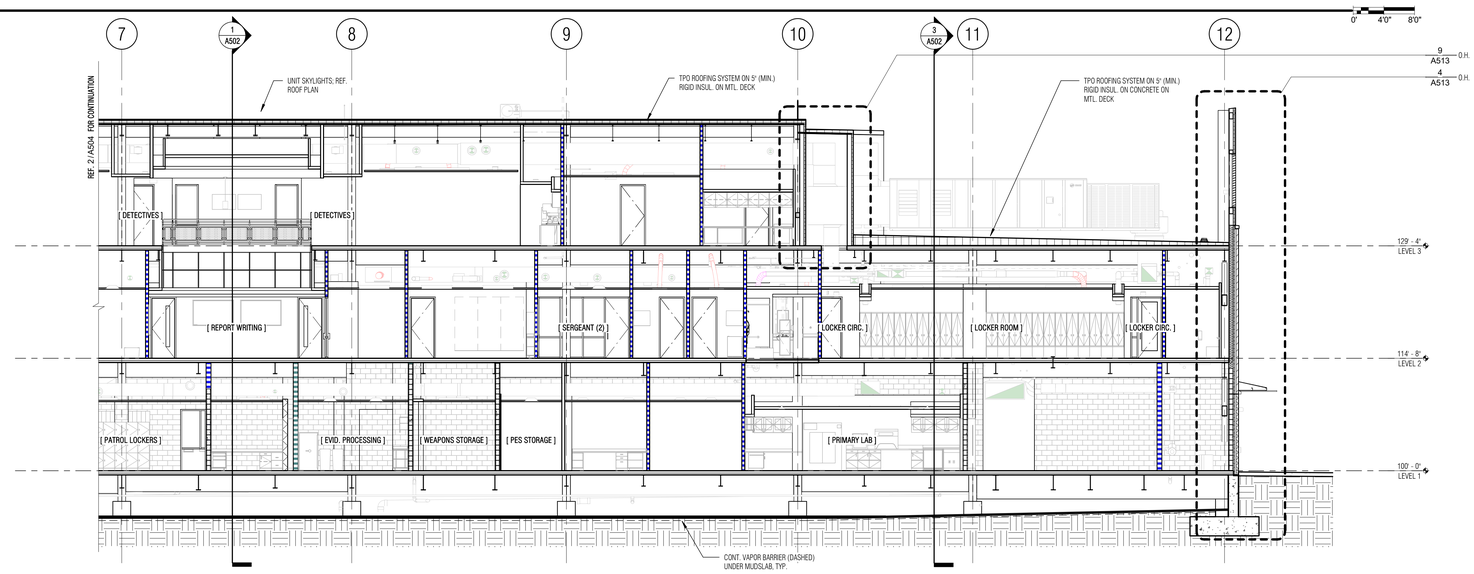

3 BUILDING SECTION - PARTIAL EAST

SCALE: 1/8" = 1'-0"

BRINKLEY SARGENT WIGINTON ARCHITECTS

Architect: Brinkley Sargent Wigginton Architects (972) 960-9970
Landscape: Kendall Landscape Architecture (214) 739-3226
Structural: L.A. Fuess Partners, Inc (214) 593-1118
MEP: M-E Engineers (214) 741-1589
Civil: KSA Engineers, Inc (903) 236-7700
Technology: M-E Engineers (303) 421-6656

LONGVIEW POLICE DEPARTMENT

518 W. SOUTH ST. LONGVIEW, TEXAS 75601

HISTORY

#	DATE	DESCRIPTION

08/19/2020

BUILDING SECTIONS

21719

08/19/2020

A504

BID ISSUE

8/19/2020 3:06:52 PM

D:\Revit Local\LPD_CENTRAL_419_Jacobsen_08-19-2020.rvt

© 2020 Brinkley Sargent Wigginton Architects, Inc.

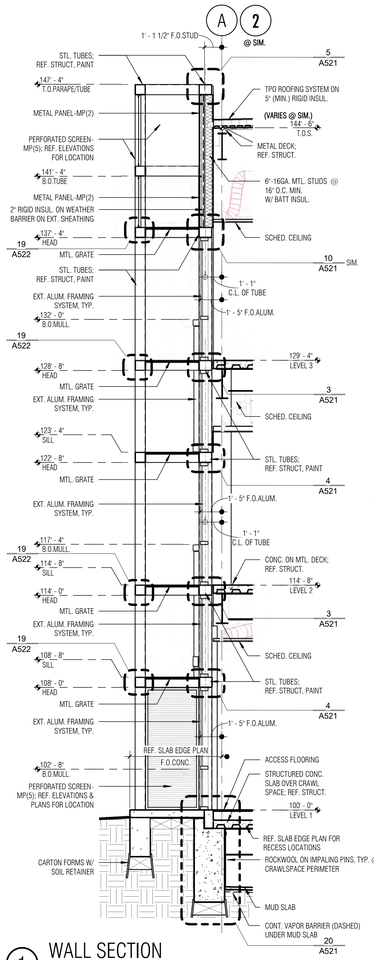

1 WALL SECTION
SCALE: 1/4" = 1'-0"

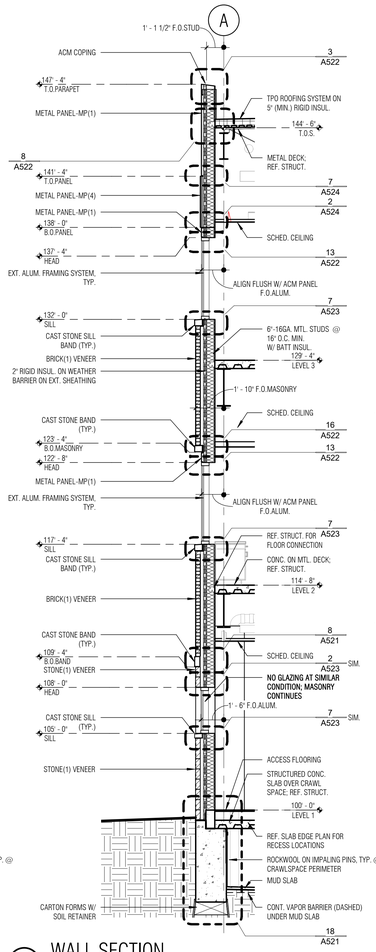

2 WALL SECTION
SCALE: 1/4" = 1'-0"

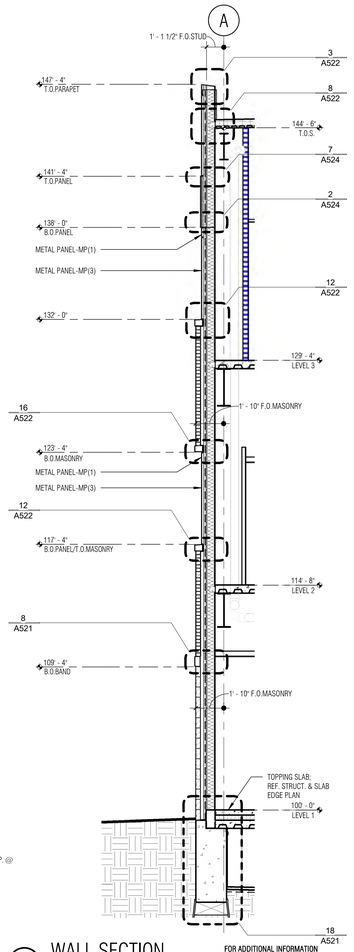

3 WALL SECTION
SCALE: 1/4" = 1'-0"
FOR ADDITIONAL INFORMATION REFERENCE: 2/A511

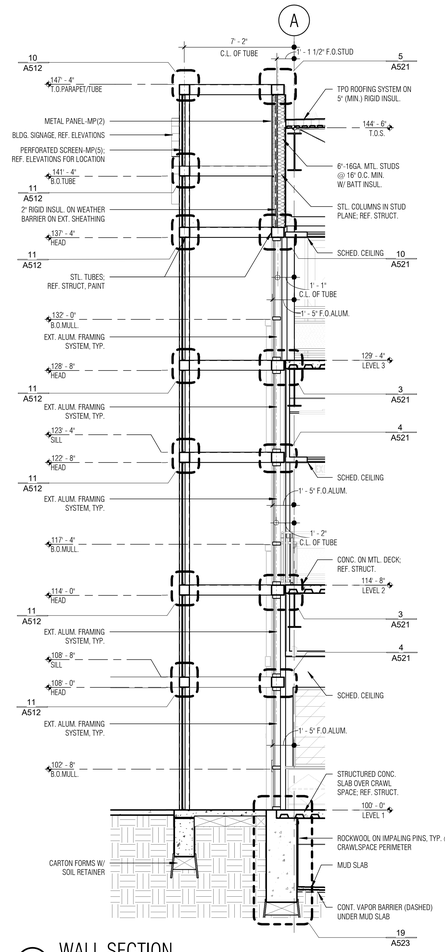

4 WALL SECTION
SCALE: 1/4" = 1'-0"

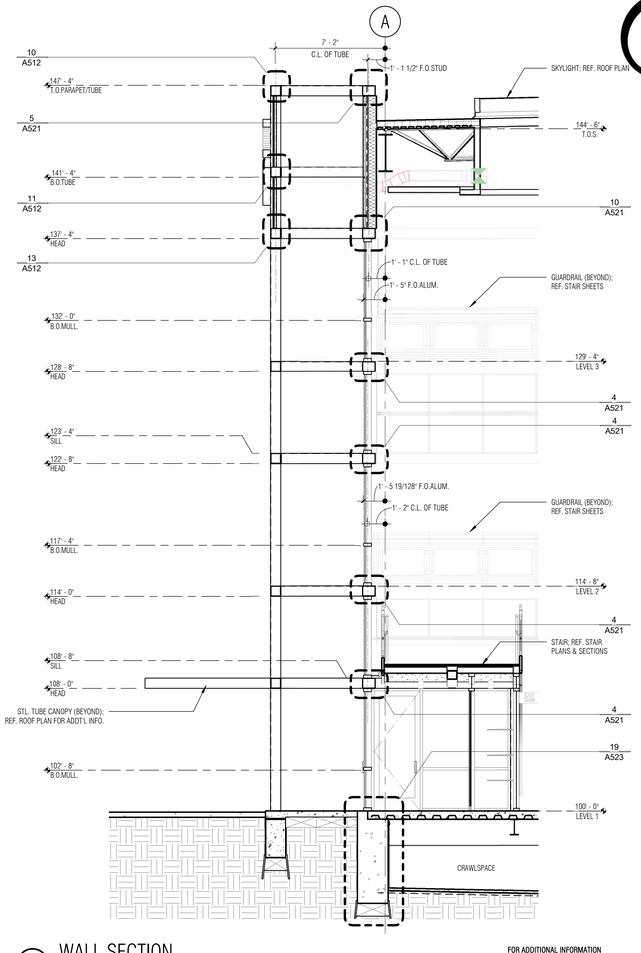

5 WALL SECTION
SCALE: 1/4" = 1'-0"
FOR ADDITIONAL INFORMATION REFERENCE: 4/A511

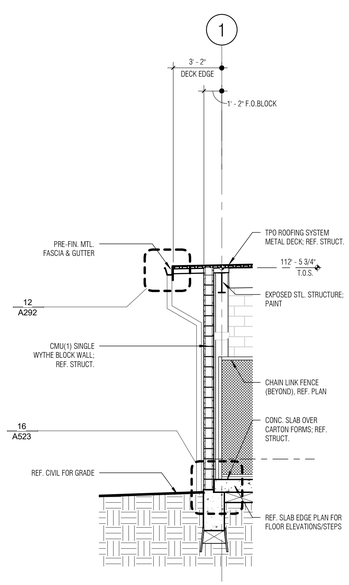

6 WS GRID 1-01 @ ASSET BLDG
SCALE: 1/4" = 1'-0"
WEST ASSET BUILDING

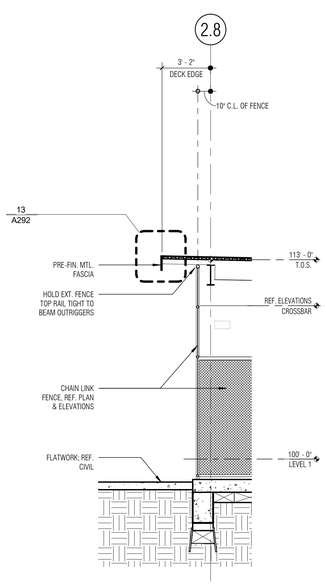

7 WALL SECTION
SCALE: 1/4" = 1'-0"
FOR ADDITIONAL INFORMATION REFERENCE: 6/A511
WEST ASSET BUILDING

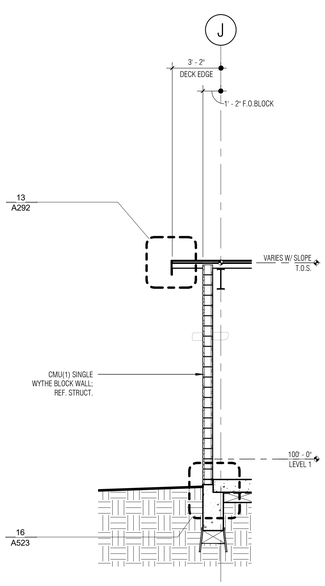

8 WALL SECTION
SCALE: 1/4" = 1'-0"
FOR ADDITIONAL INFORMATION REFERENCE: 6/A511
WEST ASSET BUILDING

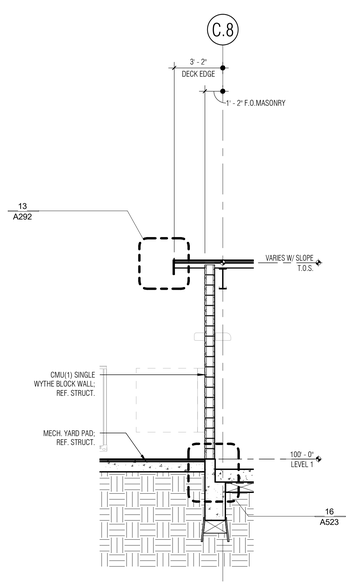

9 WALL SECTION
SCALE: 1/4" = 1'-0"
FOR ADDITIONAL INFORMATION REFERENCE: 6/A511
WEST ASSET BUILDING

LONGVIEW POLICE DEPARTMENT

518 W. SOUTH ST. LONGVIEW, TEXAS 75601

BRINKLEY SARGENT WIGGINTON ARCHITECTS

Architect: Brinkley Sargent Wigginton Architects (972) 960-9970
Landscape: Kendall Landscape Architecture (214) 739-3226
Structural: L.A. Fuess Partners, Inc (214) 593-1118
MEP: M-E Engineers (214) 741-1589
Civil: KSA Engineers, Inc (903) 236-7700
Technology: M-E Engineers (303) 421-6656

HISTORY		
#	DATE	DESCRIPTION

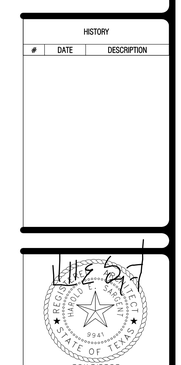

WALL SECTIONS

BID ISSUE

21719
08/19/2020

A511

D:\Revit Locals\LPD_CENTRAL_A19_bscanner_08-18-2020.rvt
8/18/2020 3:07:59 PM

© 2020 Brinkley Sargent Wiginton Architects, Inc.

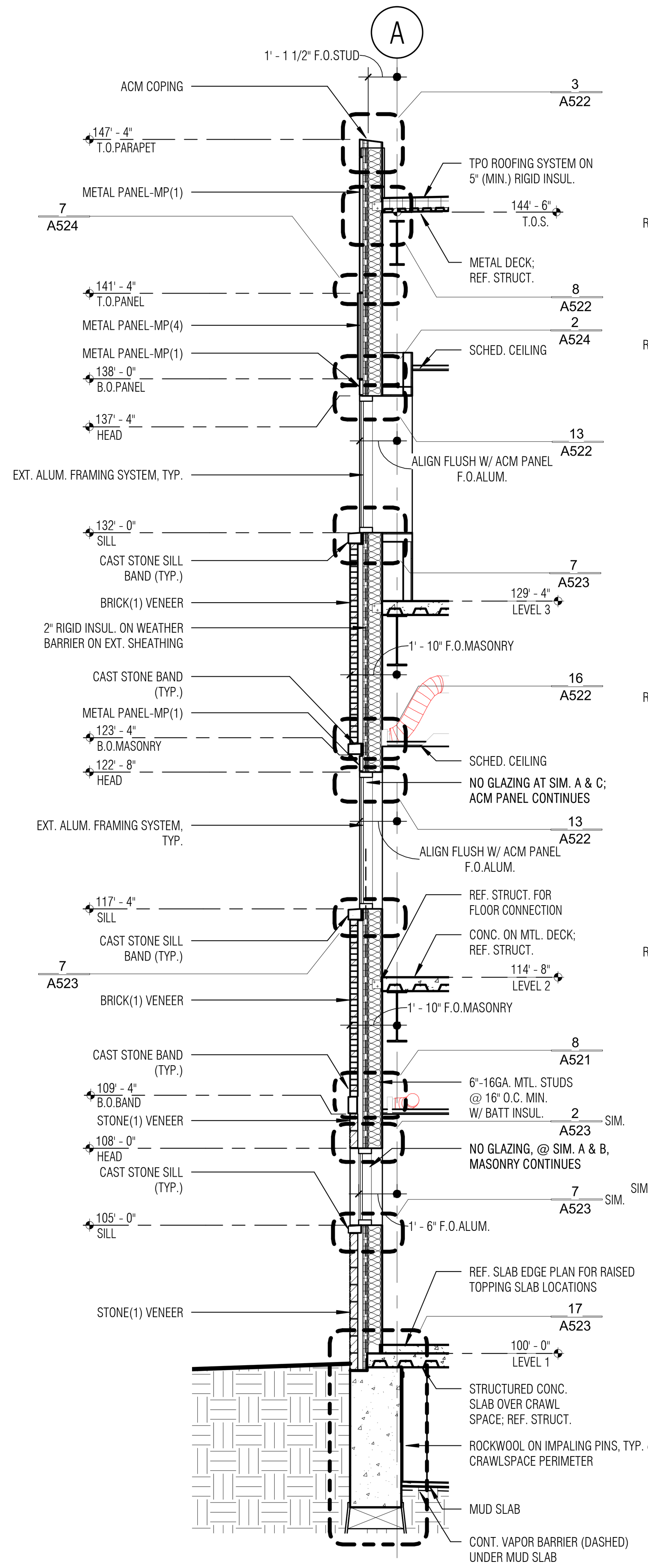

1 WALL SECTION
SCALE: 1/4" = 1'-0"

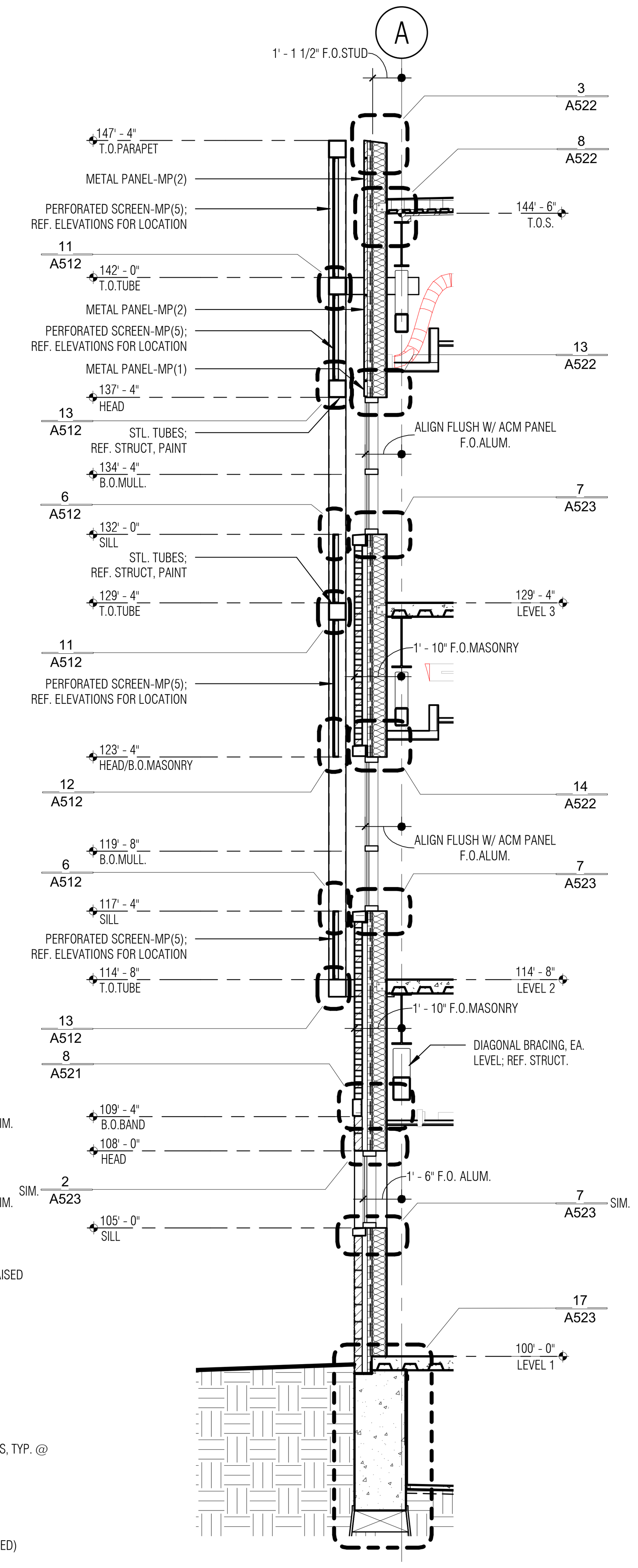

2 WALL SECTION
SCALE: 1/4" = 1'-0"
FOR ADDITIONAL INFORMATION
REFERENCE: 1/A512

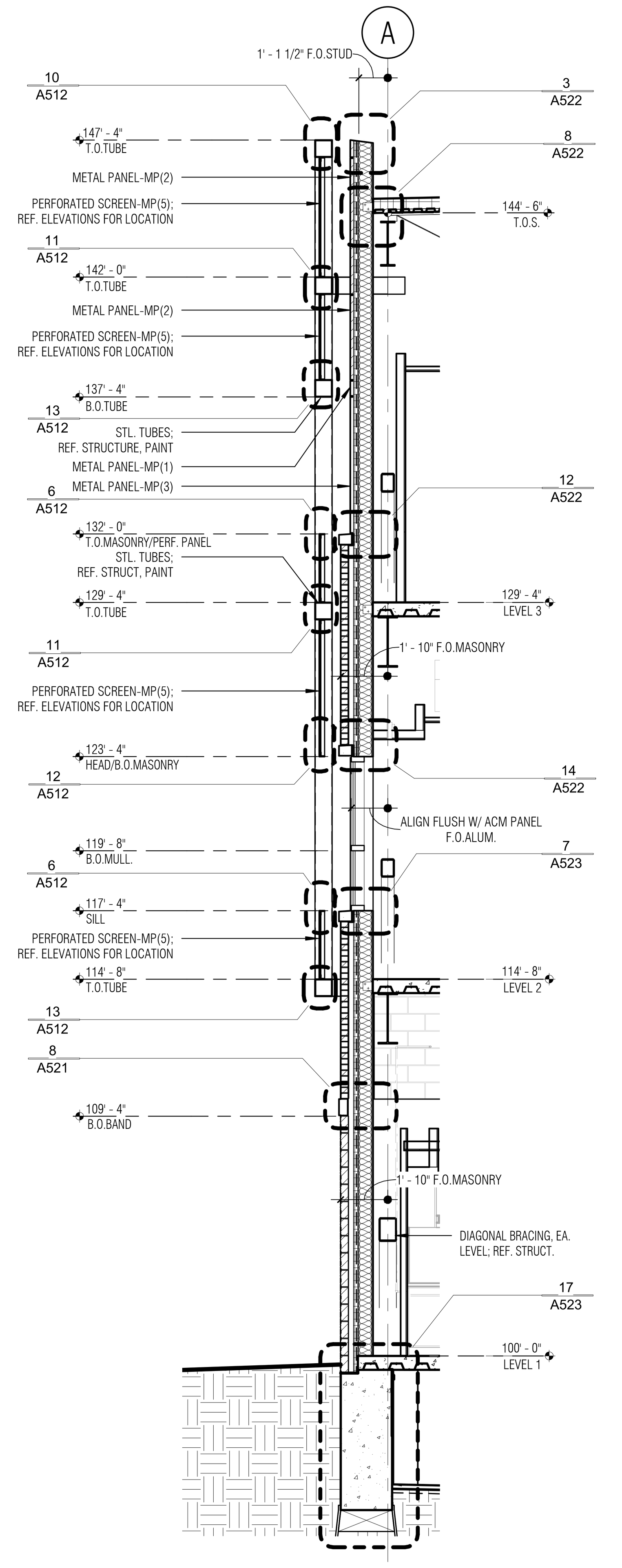

3 WALL SECTION
SCALE: 1/4" = 1'-0"
FOR ADDITIONAL INFORMATION
REFERENCE: 1/A512

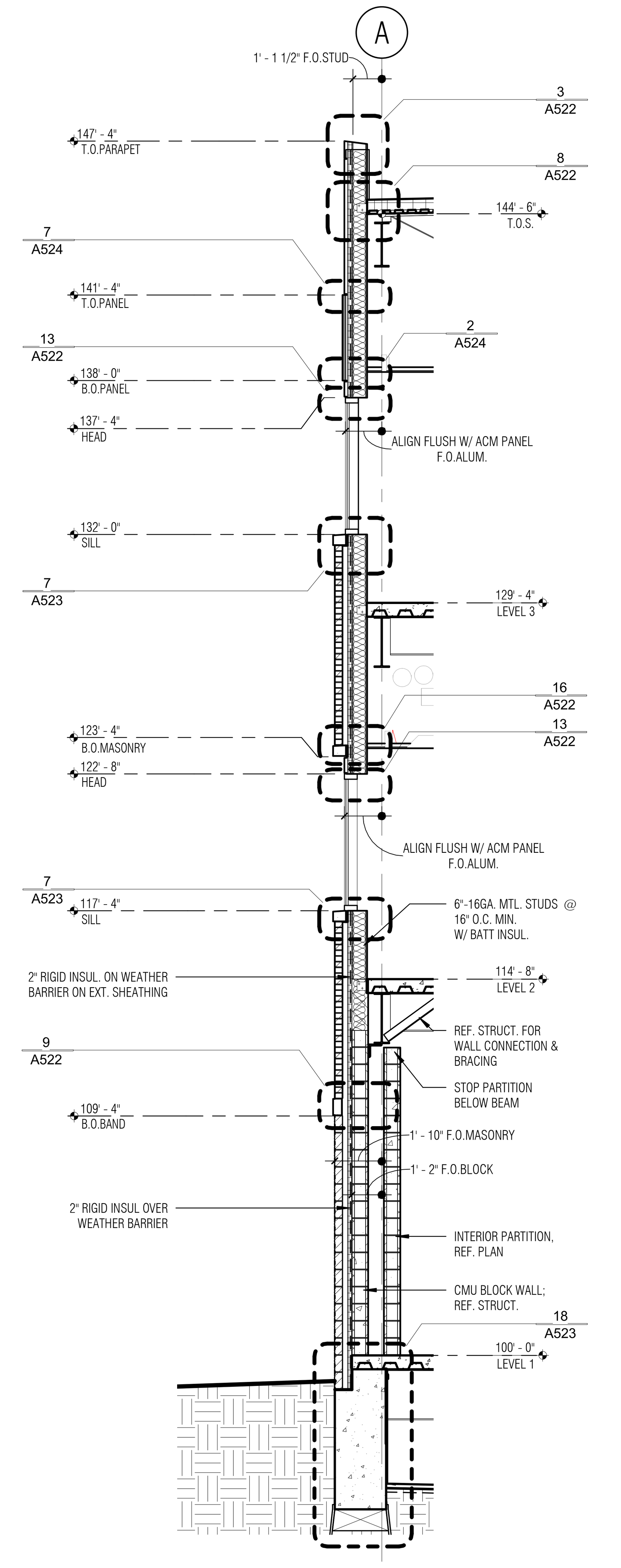

4 WALL SECTION
SCALE: 1/4" = 1'-0"
FOR ADDITIONAL INFORMATION
REFERENCE: 1/A512

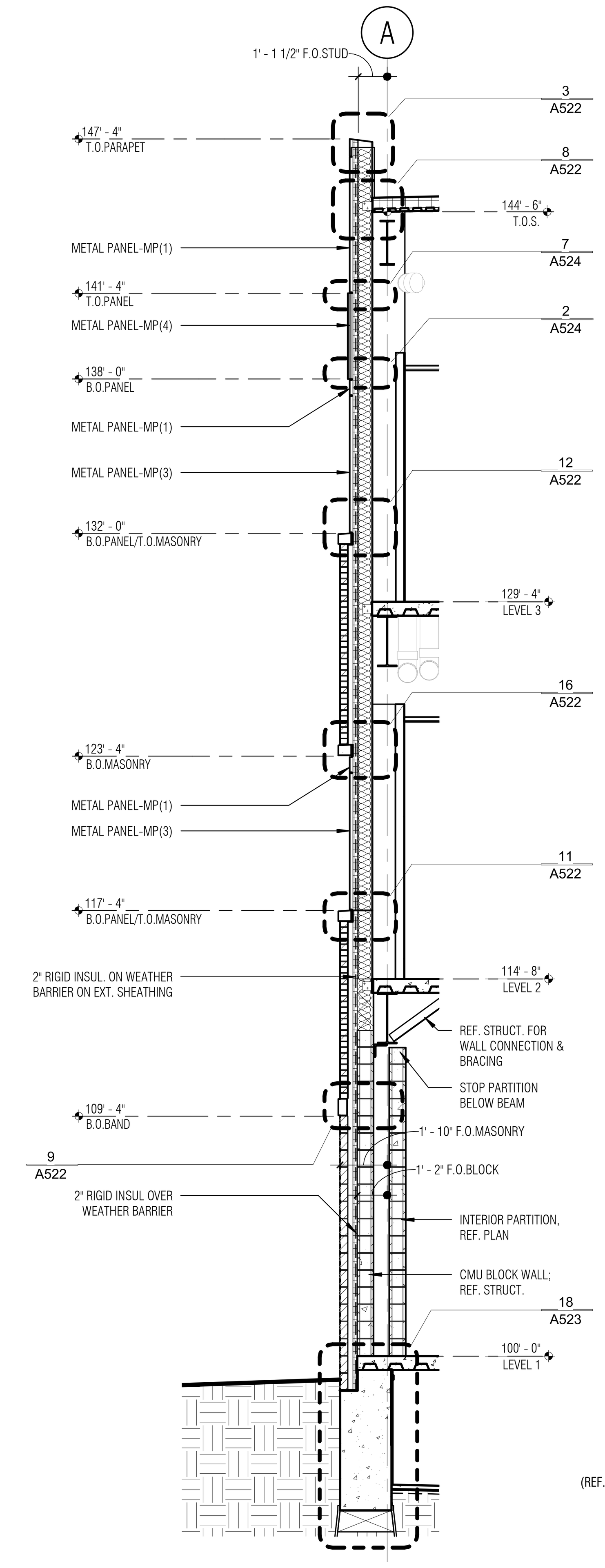

5 WALL SECTION
SCALE: 1/4" = 1'-0"
FOR ADDITIONAL INFORMATION
REFERENCE: 1/A512

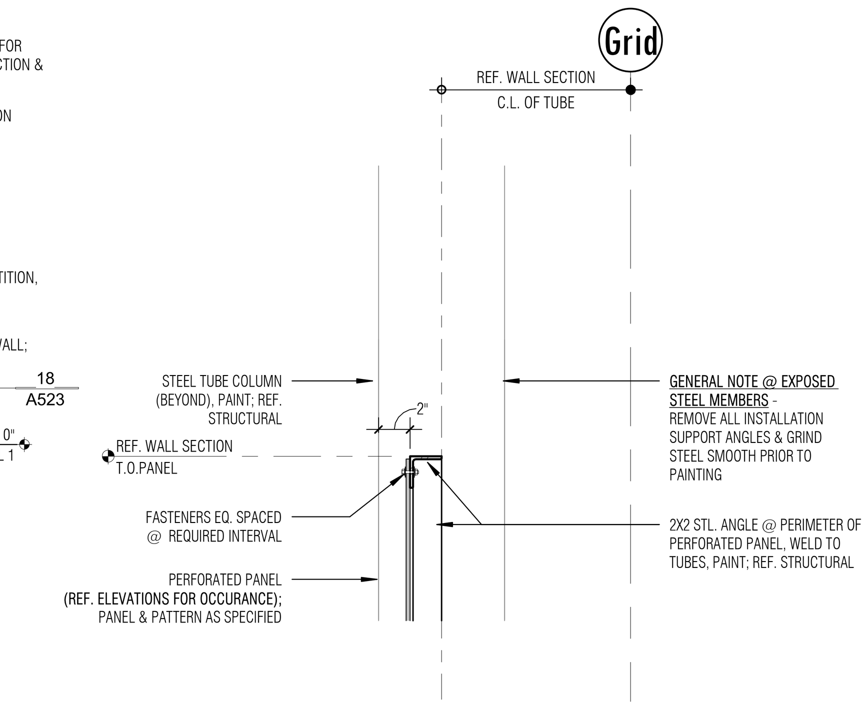

6 HEAD @ STL. ANGLE/PERFORATED PANEL
SCALE: 1 1/2" = 1'-0"

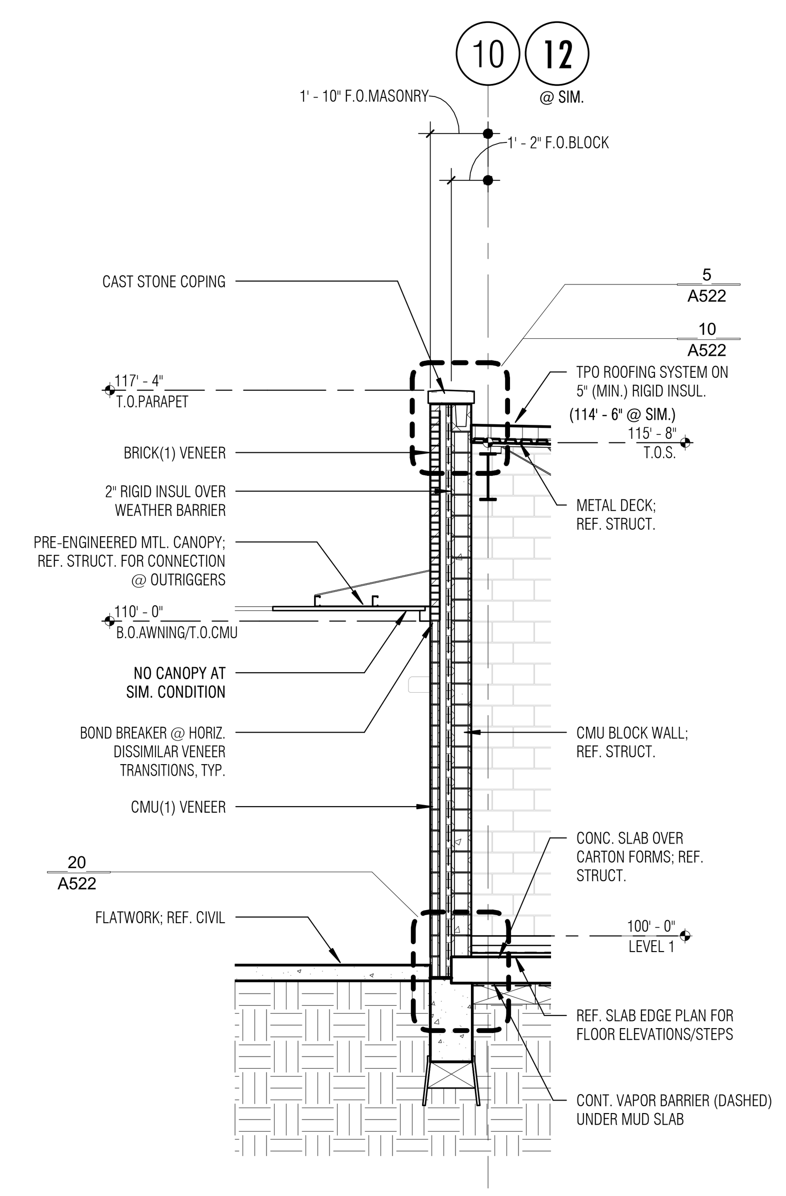

7 WALL SECTION
SCALE: 1/4" = 1'-0"
EAST ASSET BUILDING

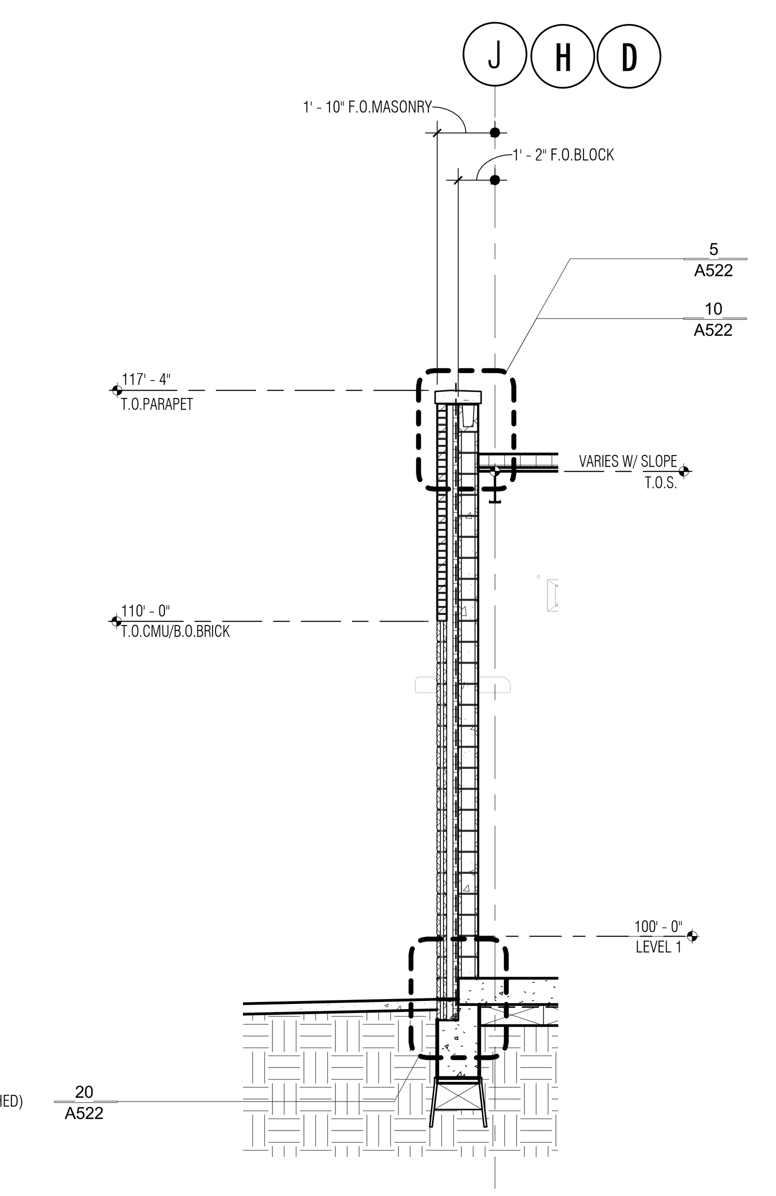

8 WALL SECTION
SCALE: 1/4" = 1'-0"
FOR ADDITIONAL INFORMATION
REFERENCE: 7/A512
EAST ASSET BUILDING

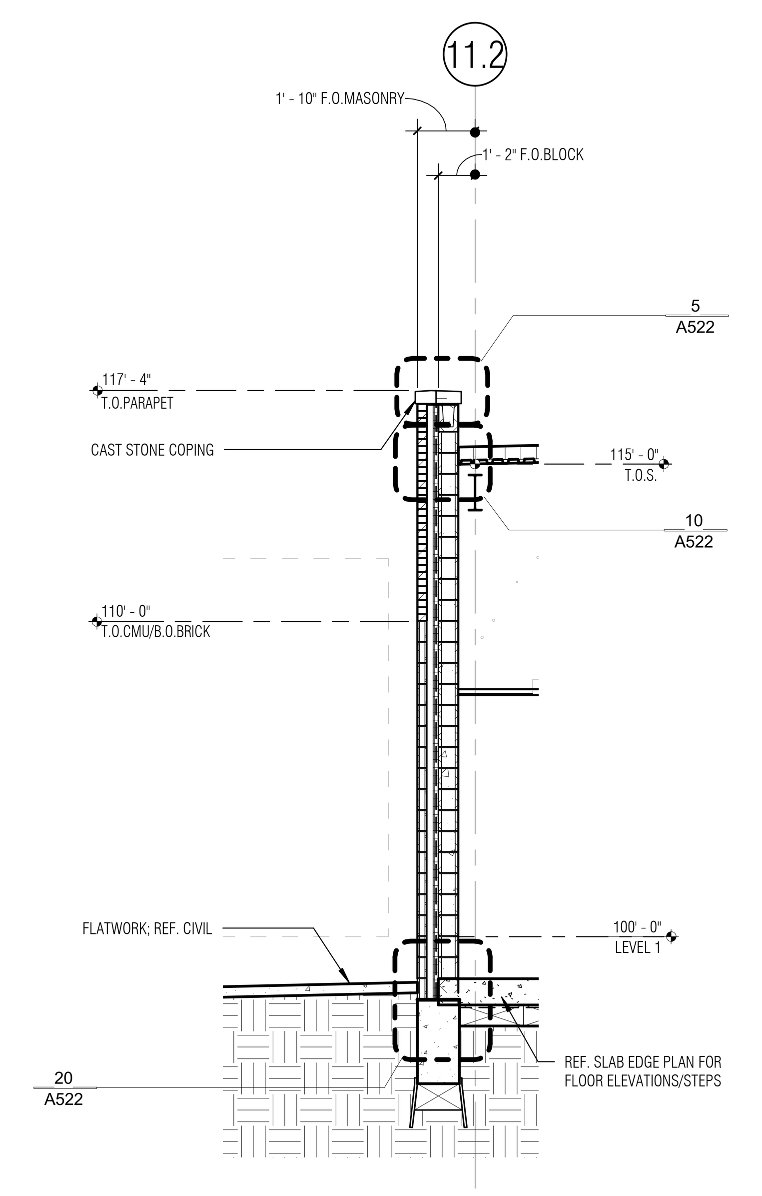

9 WALL SECTION
SCALE: 1/4" = 1'-0"
FOR ADDITIONAL INFORMATION
REFERENCE: 7/A512
EAST ASSET BUILDING

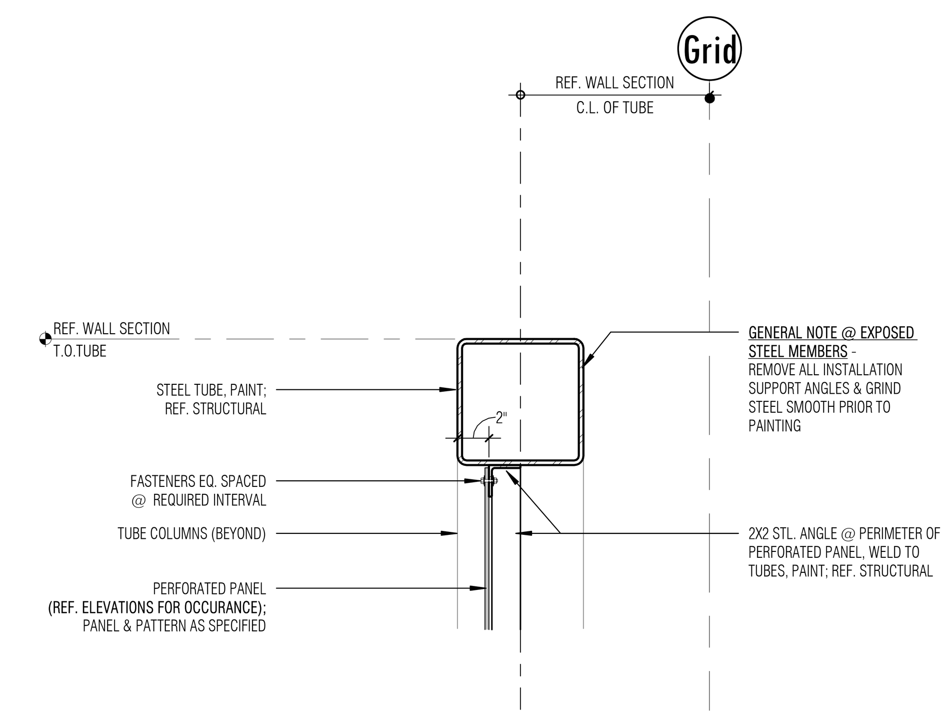

10 HEAD @ STL. TUBE/PERFORATED PANEL
SCALE: 1 1/2" = 1'-0"

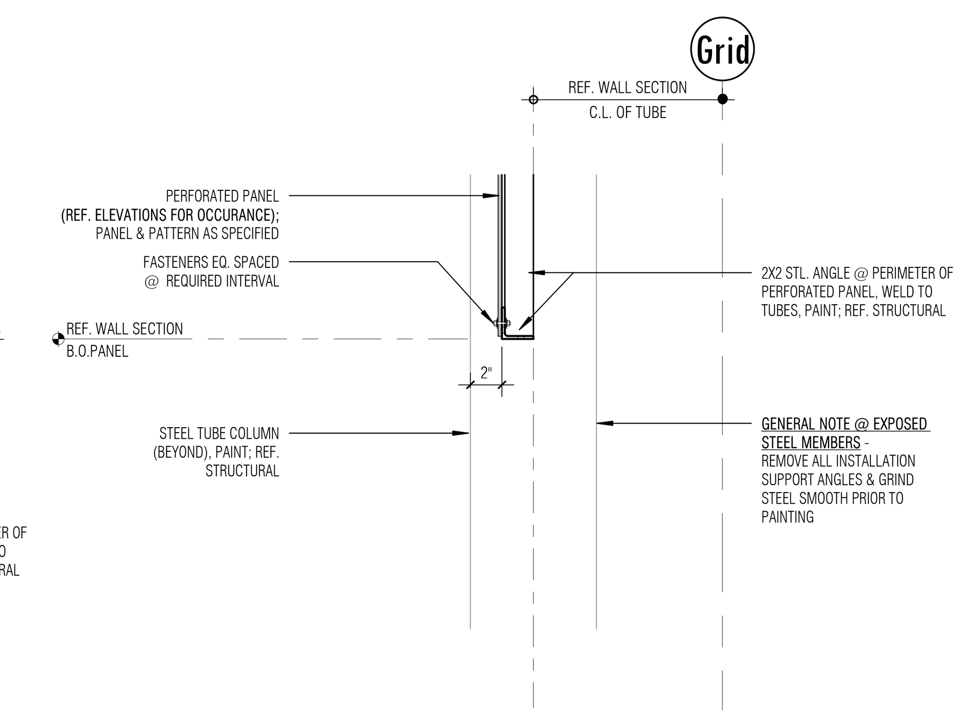

12 SILL @ STL. ANGLE/PERFORATED PANEL
SCALE: 1 1/2" = 1'-0"

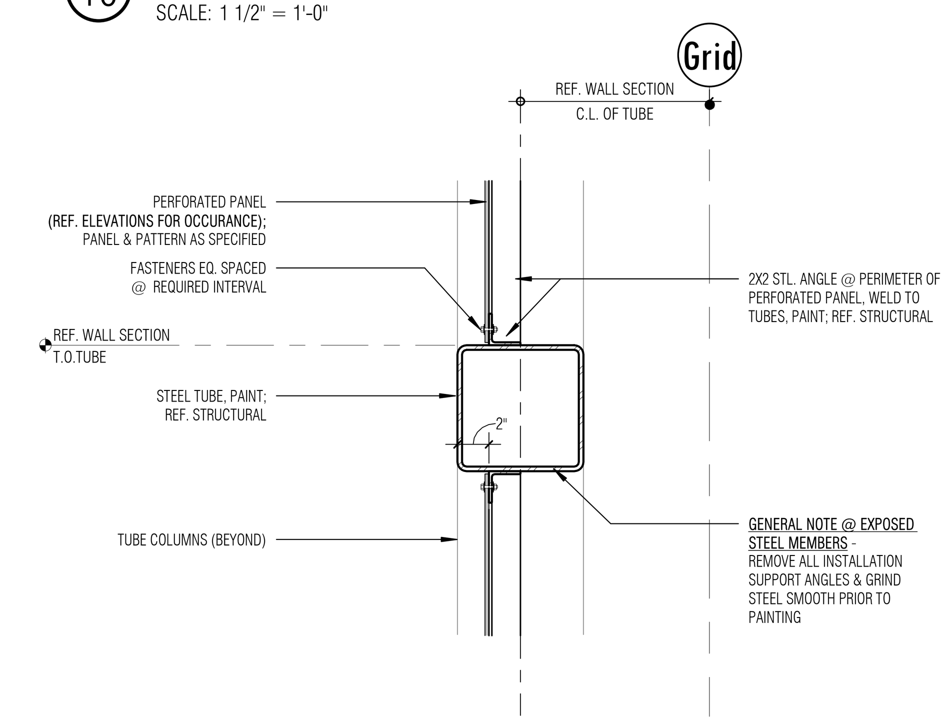

11 HEAD/SILL @ STL. TUBE/PERFORATED PANEL
SCALE: 1 1/2" = 1'-0"

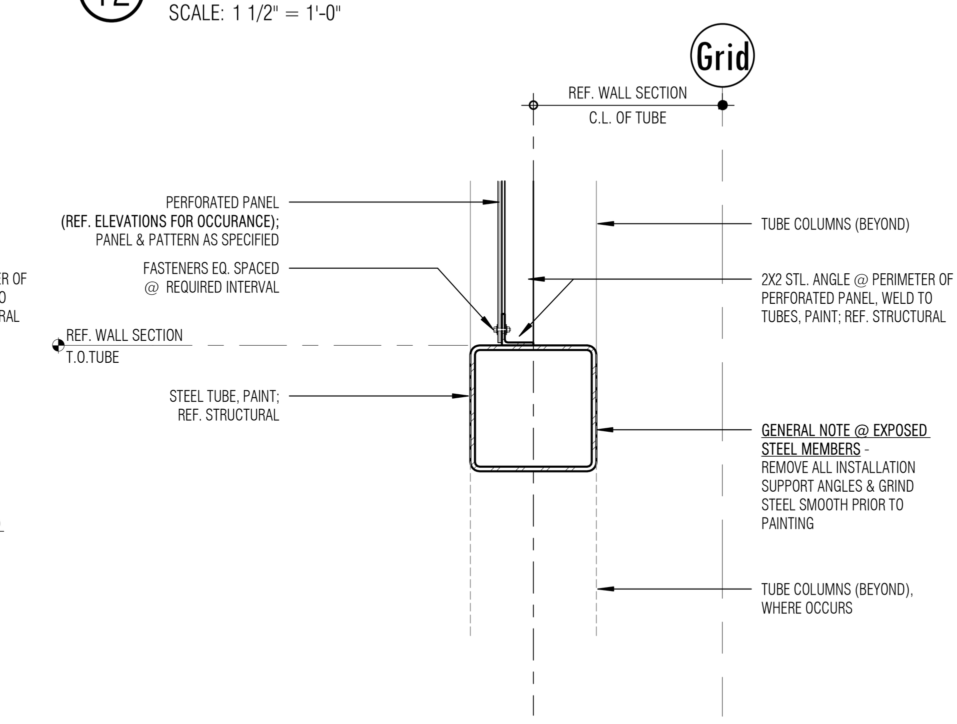

13 SILL @ STL. TUBE/PERFORATED PANEL
SCALE: 1 1/2" = 1'-0"

Architect: Brinkley Sargent Wiginton Architects (972) 960-9970
Landscape: Kendall Landscape Architecture (214) 739-3226
Structural: L.A. Fuess Partners, Inc (214) 593-1118
MEP: M-E Engineers (214) 741-1589
Civil: KSA Engineers, Inc (903) 236-7700
Technology: M-E Engineers (303) 421-6656

BRINKLEY SARGENT WIGINTON ARCHITECTS

LONGVIEW POLICE DEPARTMENT

518 W. SOUTH ST. LONGVIEW, TEXAS 75601

HISTORY		
#	DATE	DESCRIPTION

REGISTERED ARCHITECT HAROLD E. SARGENT 9941 STATE OF TEXAS
08/19/2020

WALL SECTIONS

21719
08/19/2020
A512

BID ISSUE

8/18/2020 3:09:06 PM
D:\Revit Locals\LPD_CENTRAL_A19_bcochener_08-18-2020.rvt

© 2020 Brinkley Sargent Wigginton Architects, Inc.

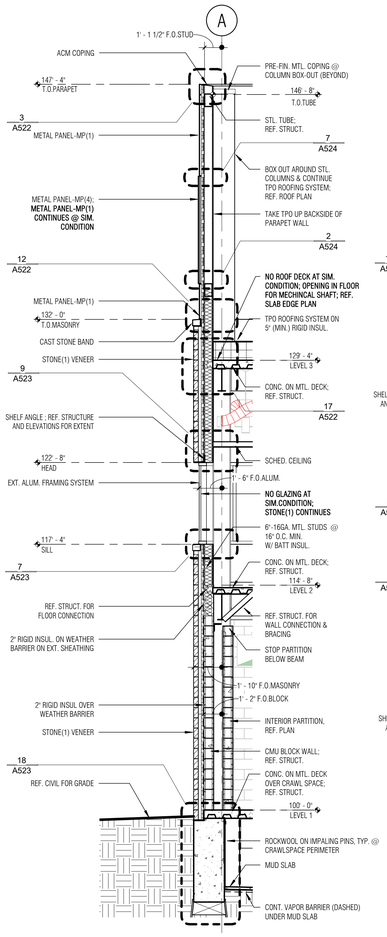

1 WALL SECTION
SCALE: 1/4" = 1'-0"

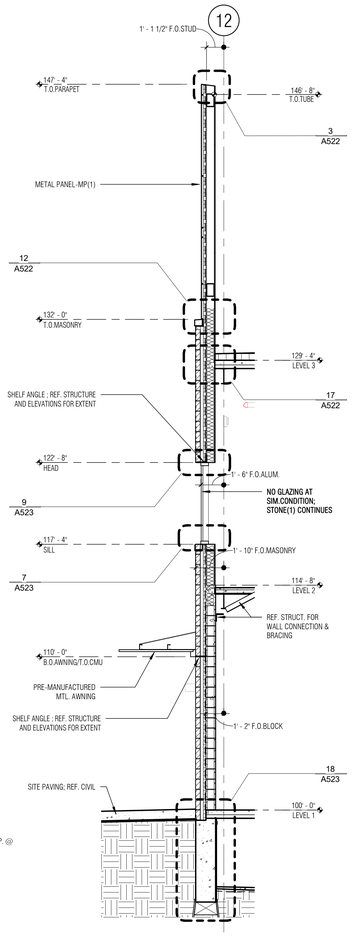

2 WALL SECTION
SCALE: 1/4" = 1'-0"
FOR ADDITIONAL INFORMATION REFERENCE: 1/A513

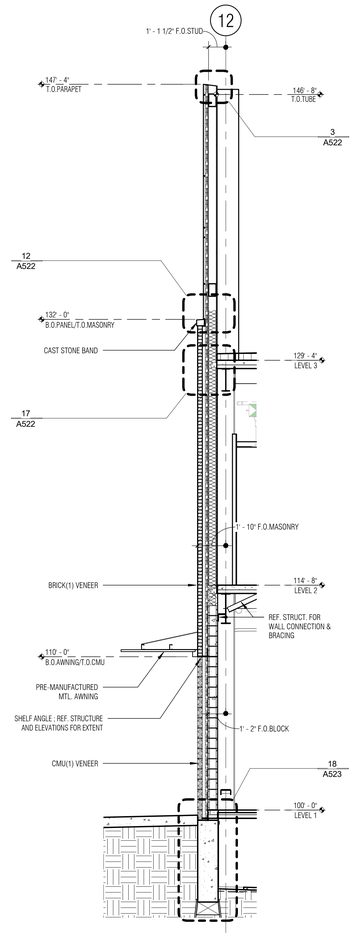

3 WALL SECTION
SCALE: 1/4" = 1'-0"
FOR ADDITIONAL INFORMATION REFERENCE: 1/A513

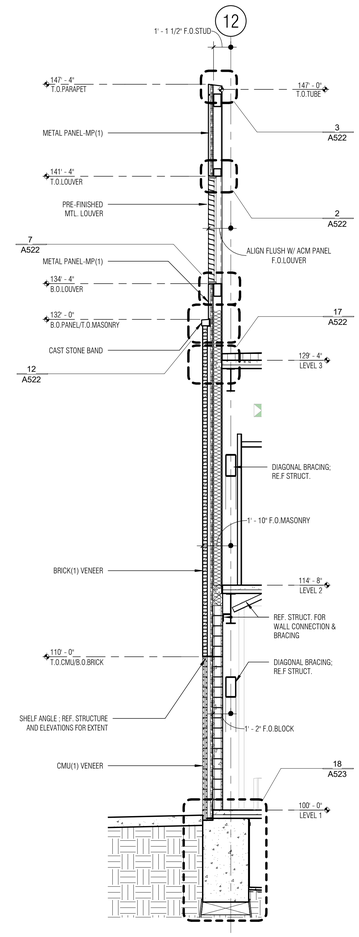

4 WALL SECTION
SCALE: 1/4" = 1'-0"
FOR ADDITIONAL INFORMATION REFERENCE: 1/A513

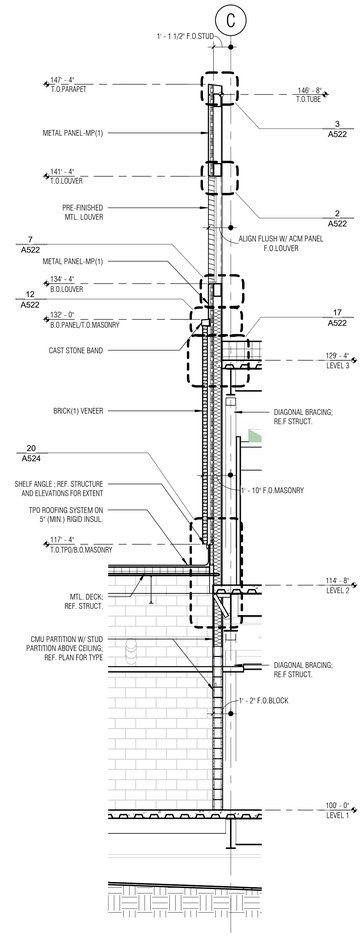

5 WALL SECTION
SCALE: 1/4" = 1'-0"
FOR ADDITIONAL INFORMATION REFERENCE: 1/A513

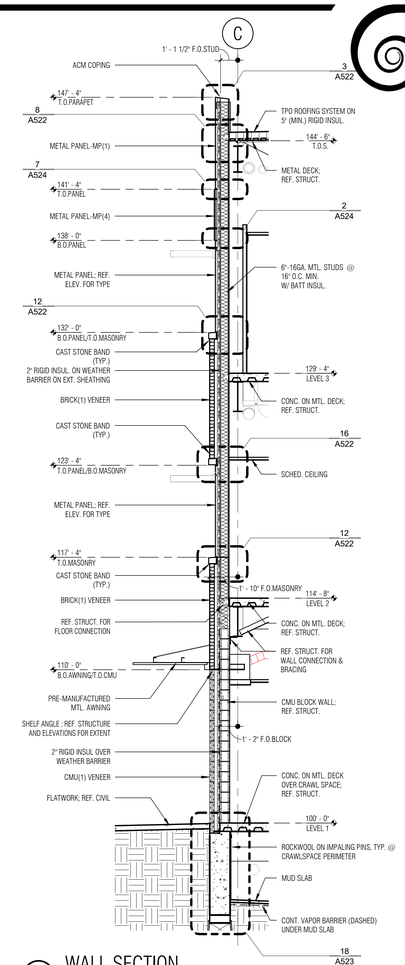

6 WALL SECTION
SCALE: 1/4" = 1'-0"

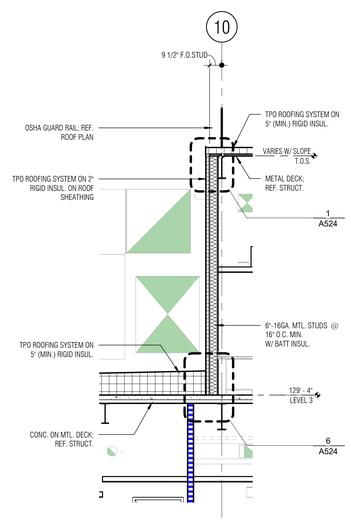

7 WALL SECTION
SCALE: 1/4" = 1'-0"

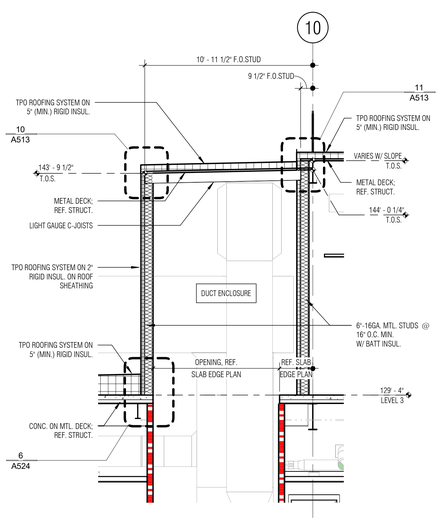

8 WALL SECTION
SCALE: 1/4" = 1'-0"

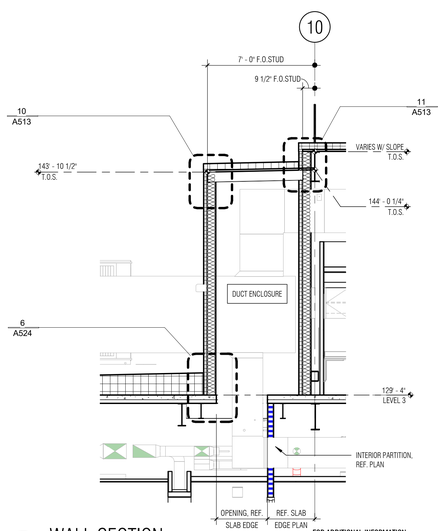

9 WALL SECTION
SCALE: 1/4" = 1'-0"
FOR ADDITIONAL INFORMATION REFERENCE: 8/A513

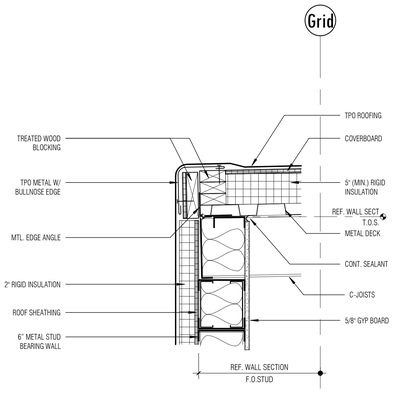

10 ROOF @ BEARING STUD/TPO
SCALE: 1 1/2" = 1'-0"

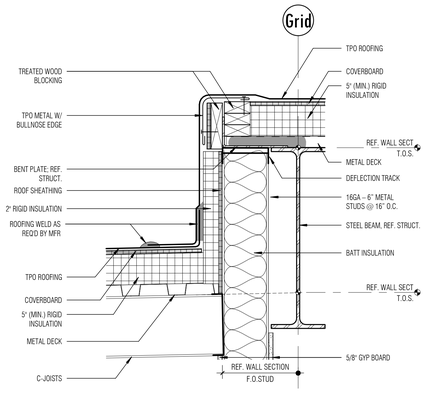

11 ROOF TRANSITION @ STUD/TPO (HI/LOW ROOF)
SCALE: 1 1/2" = 1'-0"

LONGVIEW POLICE DEPARTMENT

518 W. SOUTH ST. LONGVIEW, TEXAS 75601

Architect: Brinkley Sargent Wigginton Architects (972) 960-9970
Landscape: Kendall Landscape Architecture (214) 739-3226
Structural: L.A. Fuess Partners, Inc (214) 593-1118
MEP: M-E Engineers (214) 741-1589
Civil: KSA Engineers, Inc (903) 236-7700
Technology: M-E Engineers (303) 421-6656

BRINKLEY SARGENT WIGINTON ARCHITECTS

HISTORY

#	DATE	DESCRIPTION

REGISTERED ARCHITECT HOWARD W. SARGENT JR. 9941 STATE OF TEXAS
08/19/2020

WALL SECTIONS

21719
08/19/2020

A513

BID ISSUE

8/19/2020 3:09:41 PM

G:\Work Locals\LPD_CENTRAL_A19_bscarmer_08-19-2020.rvt

© 2020 Brinkley Sargent Wigginton Architects, Inc.

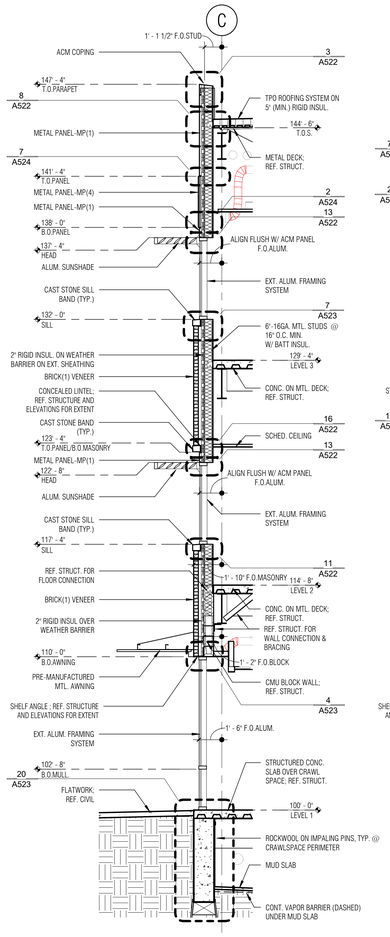

1 WALL SECTION
SCALE: 1/4" = 1'-0"

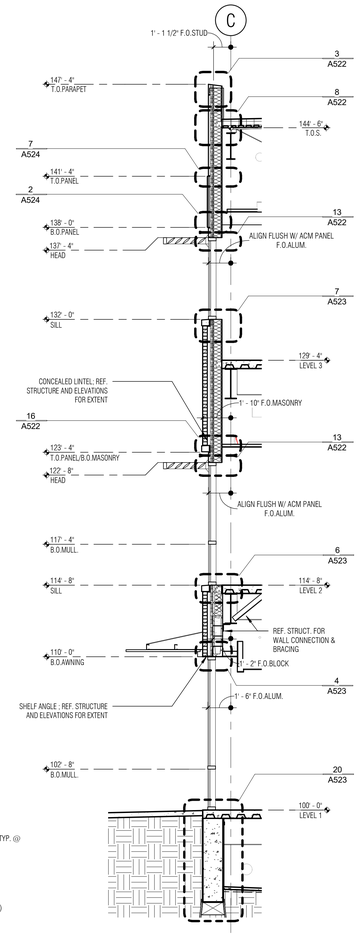

2 WALL SECTION
FOR ADDITIONAL INFORMATION REFERENCE: 1/A514
SCALE: 1/4" = 1'-0"

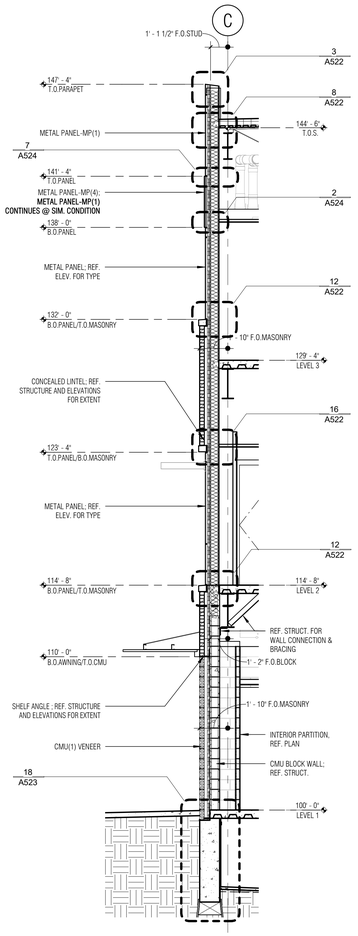

3 WALL SECTION
FOR ADDITIONAL INFORMATION REFERENCE: 1/A514
SCALE: 1/4" = 1'-0"

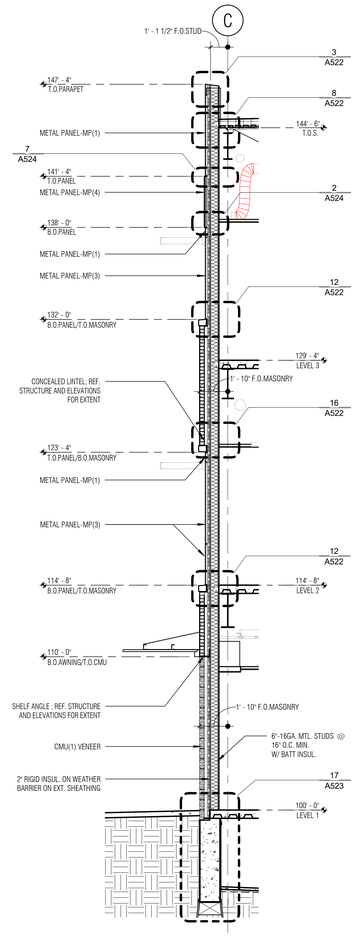

4 WALL SECTION
FOR ADDITIONAL INFORMATION REFERENCE: 1/A514
SCALE: 1/4" = 1'-0"

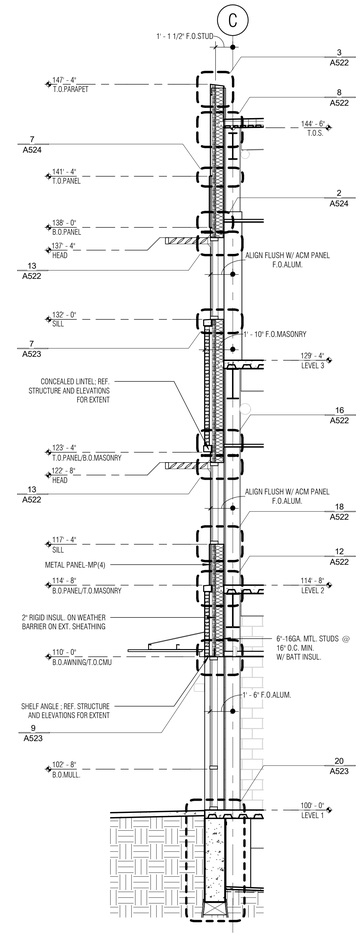

5 WALL SECTION
FOR ADDITIONAL INFORMATION REFERENCE: 1/A514
SCALE: 1/4" = 1'-0"

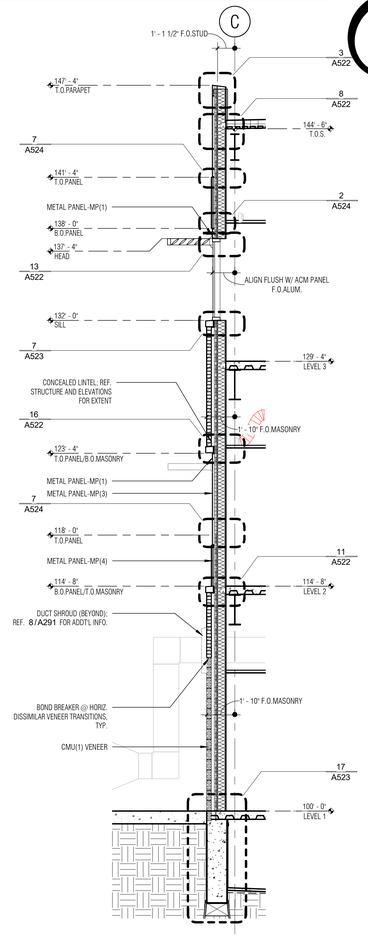

6 WALL SECTION
FOR ADDITIONAL INFORMATION REFERENCE: 1/A514
SCALE: 1/4" = 1'-0"

Architect: Brinkley Sargent Wigginton Architects (972) 960-9970
Landscape: Kendall Landscape Architecture (214) 739-3226
Structural: L.A. Fuess Partners, Inc (214) 593-1118
MEP: M-E Engineers (214) 741-1589
Civil: KSA Engineers, Inc (903) 236-7700
Technology: M-E Engineers (303) 421-6656

BRINKLEY SARGENT WIGINTON ARCHITECTS

LONGVIEW POLICE DEPARTMENT

518 W. SOUTH ST. LONGVIEW, TEXAS 75601

HISTORY

#	DATE	DESCRIPTION

REGISTERED ARCHITECT STATE OF TEXAS 9941 08/19/2020

WALL SECTIONS

21719
08/19/2020

A514

BID ISSUE

8/19/2020 3:11:03 PM

G:\Work Locals\LPD_CENTRAL_A19_bscochner_08-18-2020.rvt

© 2020 Brinkley Sargent Wigginton Architects, Inc.

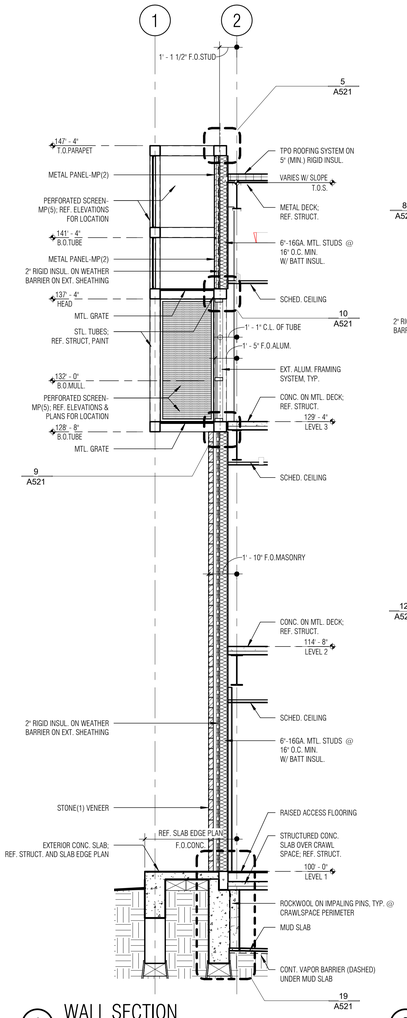

1 WALL SECTION
SCALE: 1/4" = 1'-0"

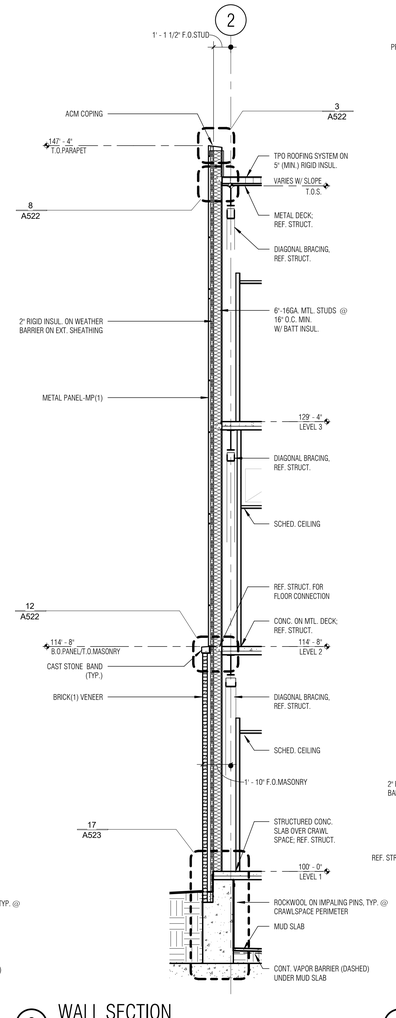

2 WALL SECTION
SCALE: 1/4" = 1'-0"

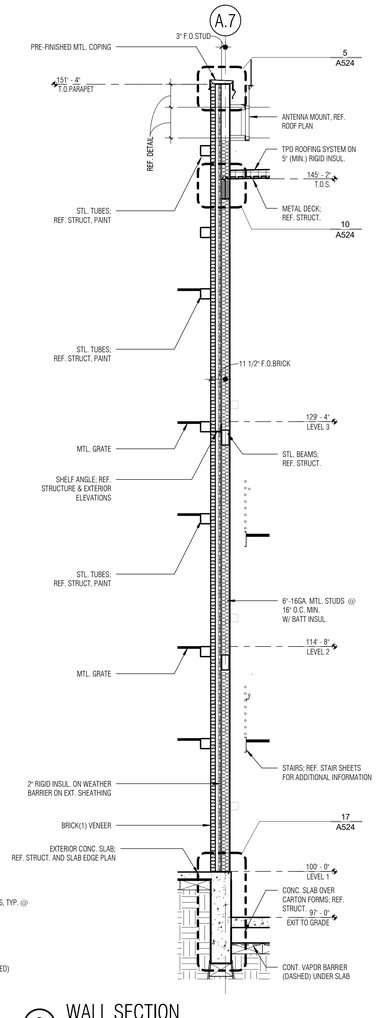

3 WALL SECTION
SCALE: 1/4" = 1'-0"

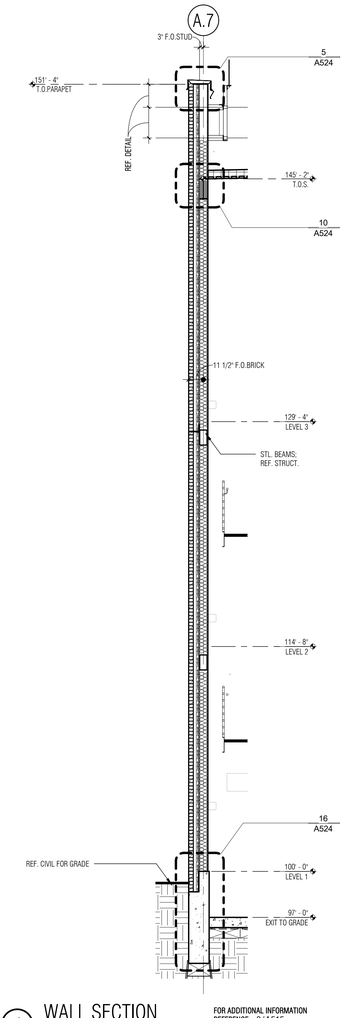

4 WALL SECTION
FOR ADDITIONAL INFORMATION
REFERENCE: 3/A515
SCALE: 1/4" = 1'-0"

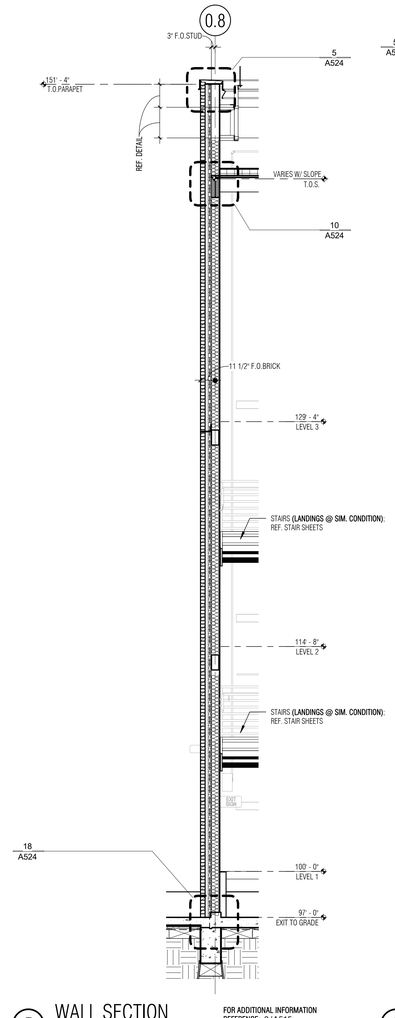

5 WALL SECTION
FOR ADDITIONAL INFORMATION
REFERENCE: 3/A515
SCALE: 1/4" = 1'-0"

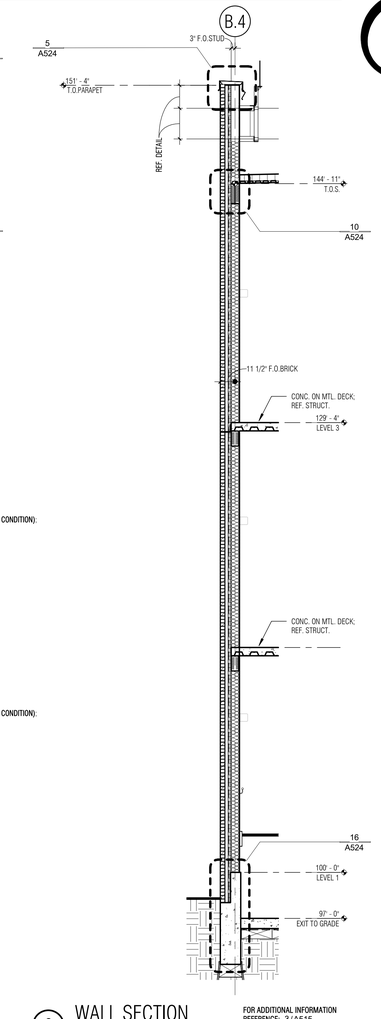

6 WALL SECTION
FOR ADDITIONAL INFORMATION
REFERENCE: 3/A515
SCALE: 1/4" = 1'-0"

Architect: Brinkley Sargent Wigginton Architects (972) 960-9970
Landscape: Kendall Landscape Architecture (214) 739-3226
Structural: L.A. Fuess Partners, Inc (214) 593-1118
MEP: M-E Engineers (214) 741-1589
Civil: KSA Engineers, Inc (903) 236-7700
Technology: M-E Engineers (303) 421-6656

BRINKLEY SARGENT WIGINTON ARCHITECTS

LONGVIEW POLICE DEPARTMENT

518 W. SOUTH ST. LONGVIEW, TEXAS 75601

HISTORY

#	DATE	DESCRIPTION

REGISTERED ARCHITECT
STATE OF TEXAS
08/19/2020

WALL SECTIONS

21719
08/19/2020

A515

BID ISSUE

8/18/2020 3:11:44 PM

D:\Revit Local\LPD_CENTRAL_A19_Jacobsen_08-18-2020.rvt

© 2020 Brinkley Sargent Wigginton Architects, Inc.

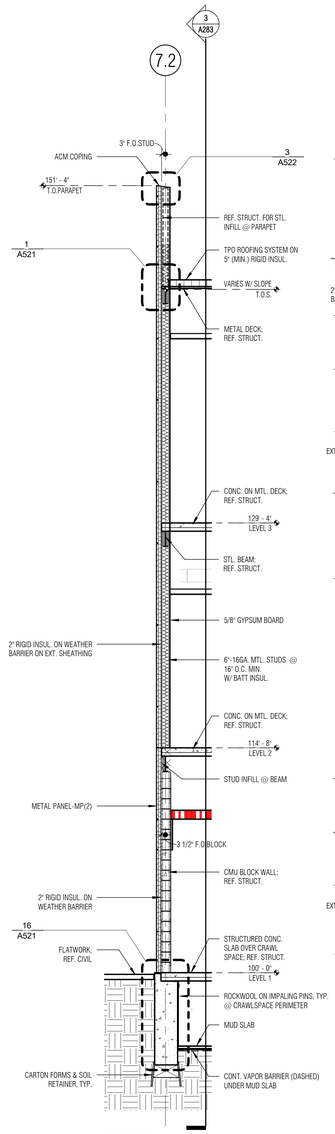

1 WALL SECTION
SCALE: 1/4" = 1'-0"

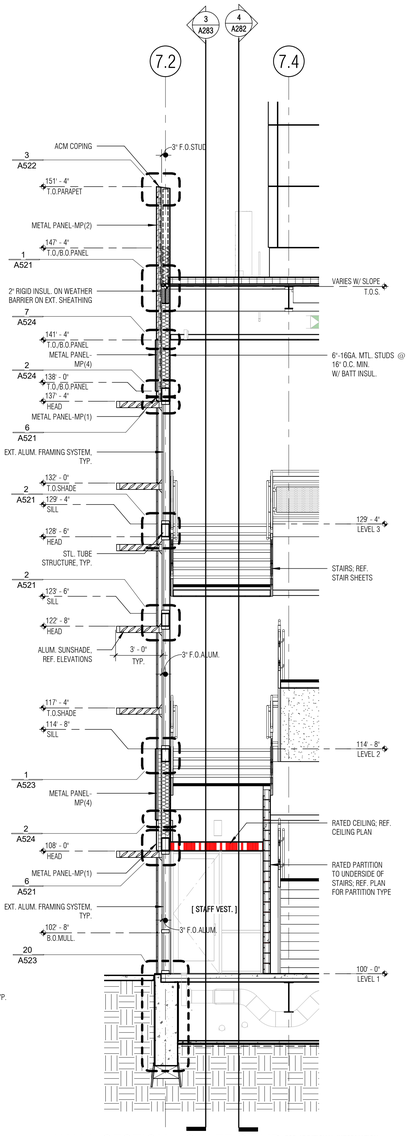

2 WALL SECTION - STAFF STAIR FOR ADDITIONAL INFORMATION REFERENCE: 1/A516
SCALE: 1/4" = 1'-0"

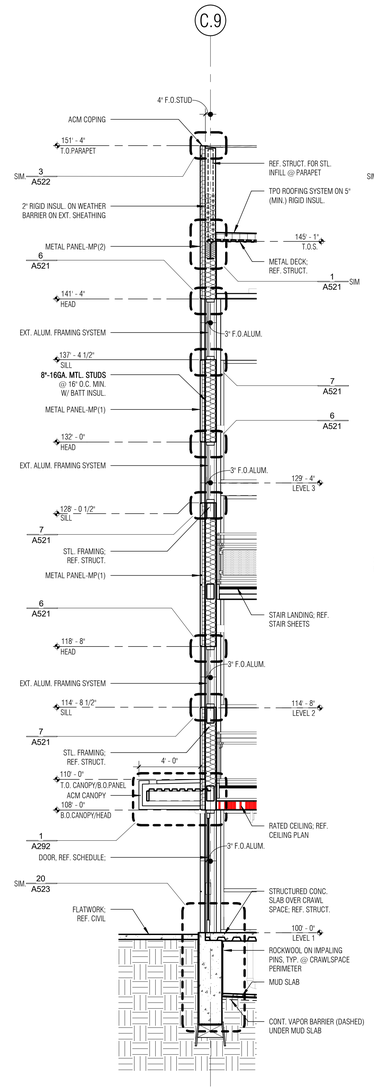

3 WALL SECTION
SCALE: 1/4" = 1'-0"

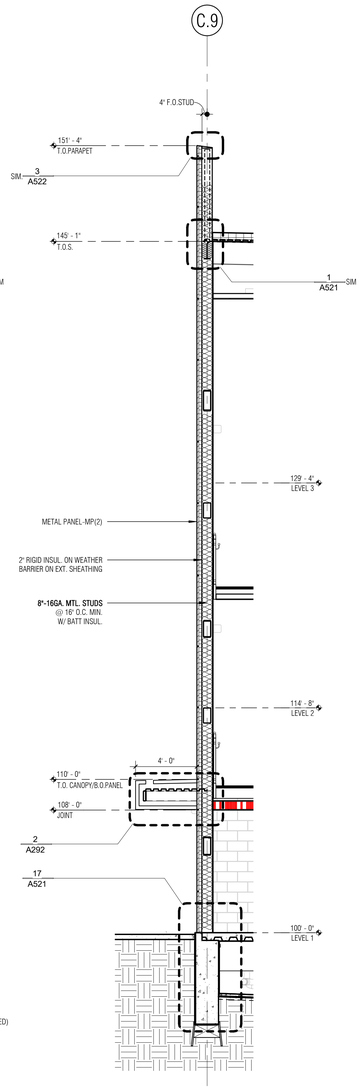

4 WALL SECTION FOR ADDITIONAL INFORMATION REFERENCE: 3/A516
SCALE: 1/4" = 1'-0"

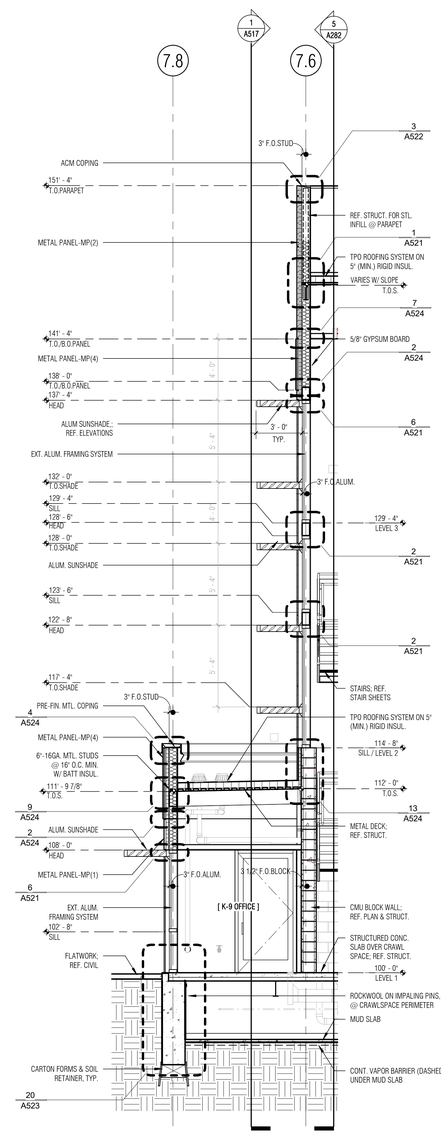

5 WALL SECTION
SCALE: 1/4" = 1'-0"

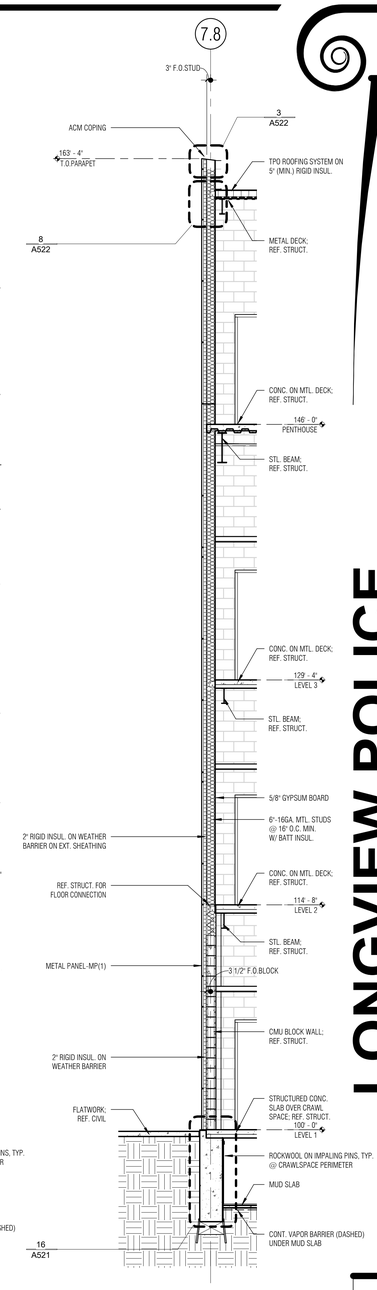

6 WALL SECTION
SCALE: 1/4" = 1'-0"

BRINKLEY SARGENT WIGGINTON ARCHITECTS

Architect: Brinkley Sargent Wigginton Architects (972) 960-9970
Landscape: Kendall Landscape Architecture (214) 739-3226
Structural: L.A. Fuess Partners, Inc (214) 593-1118
MEP: M-E Engineers (214) 741-1589
Civil: KSA Engineers, Inc (903) 236-7700
Technology: M-E Engineers (303) 421-6656

LONGVIEW POLICE DEPARTMENT

518 W. SOUTH ST. LONGVIEW, TEXAS 75601

HISTORY		
#	DATE	DESCRIPTION

REGISTERED ARCHITECT WILLIAM SARGENT 9941 STATE OF TEXAS
08/19/2020

WALL SECTIONS

21719
08/19/2020

A516

BID ISSUE

8/19/2020 3:16:59 PM

D:\Revit Locals\LPD_CENTRAL_A19_bscotner_08-18-2020.rvt

© 2020 Brinkley Sargent Wigginton Architects, Inc.

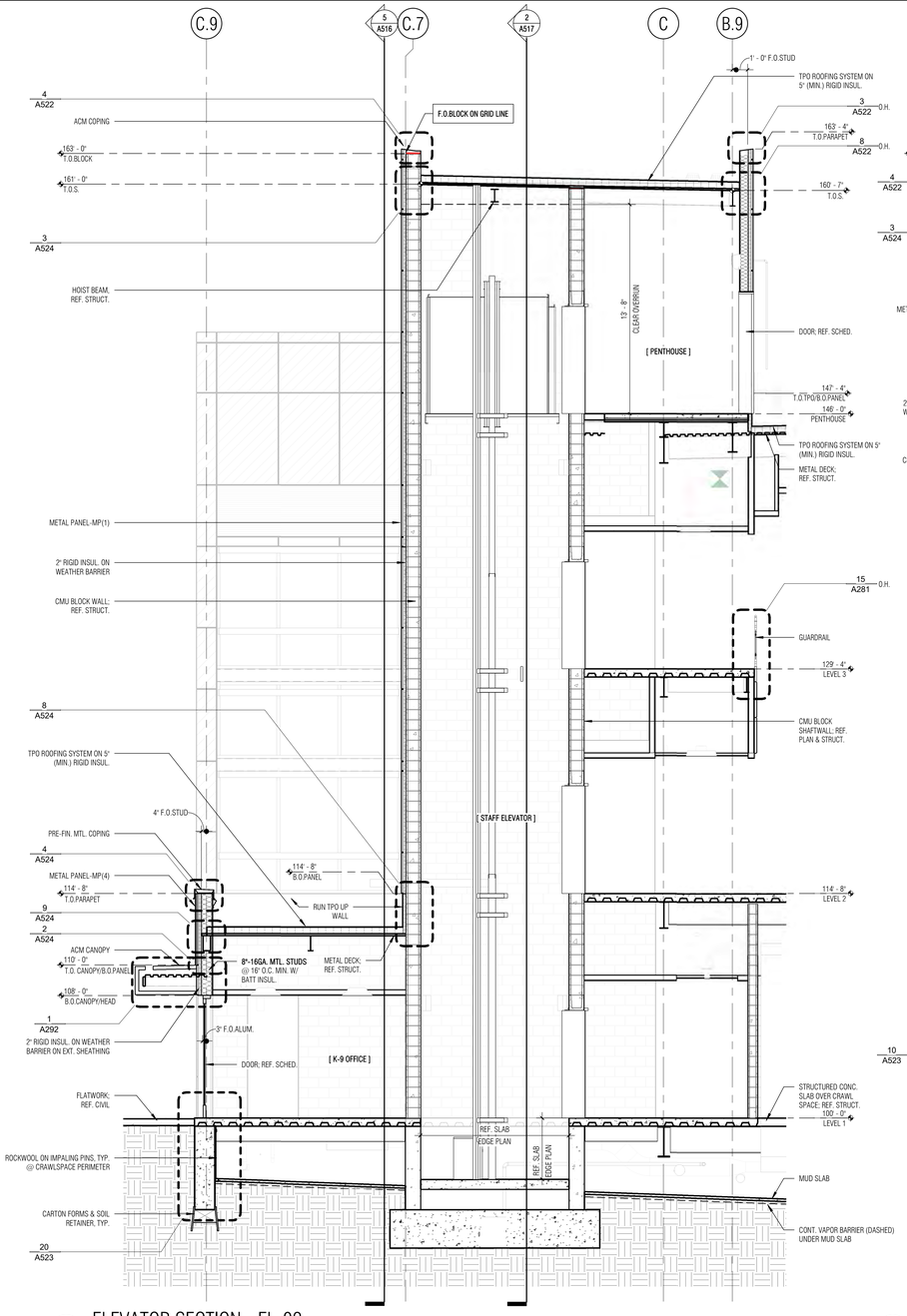

1 ELEVATOR SECTION - EL-02
SCALE: 1/4" = 1'-0"

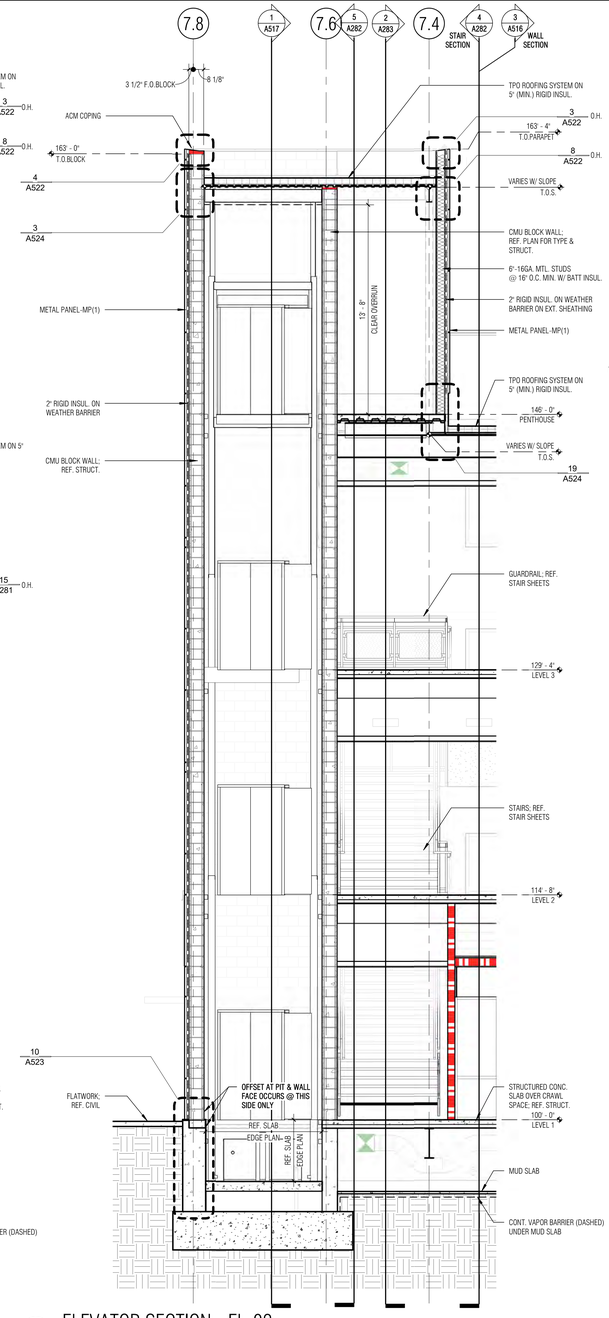

2 ELEVATOR SECTION - EL-02
SCALE: 1/4" = 1'-0"

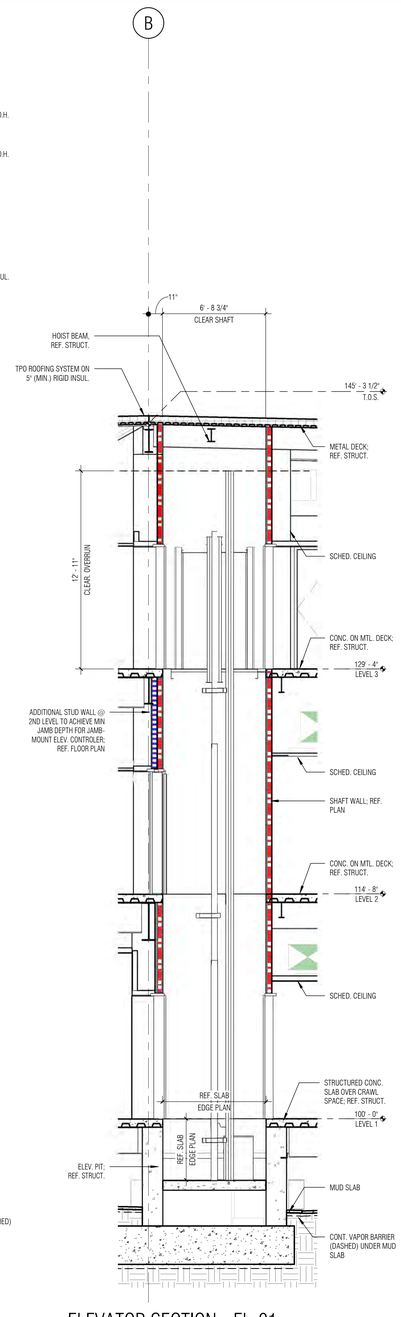

3 ELEVATOR SECTION - EL-01
SCALE: 1/4" = 1'-0"

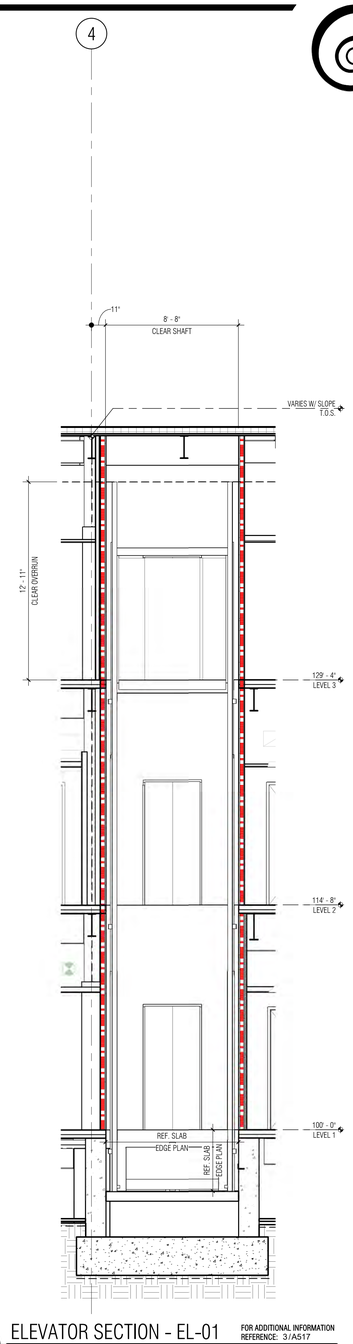

4 ELEVATOR SECTION - EL-01
SCALE: 1/4" = 1'-0"

FOR ADDITIONAL INFORMATION REFERENCE: 3/A517

BRINKLEY SARGENT WIGGINTON ARCHITECTS

Architect: Brinkley Sargent Wigginton Architects (972) 960-9970
Landscape: Kendall Landscape Architecture (214) 739-3226
Structural: L.A. Fuess Partners, Inc (214) 593-1118
MEP: M-E Engineers (214) 741-1589
Civil: KSA Engineers, Inc (903) 236-7700
Technology: M-E Engineers (303) 421-6656

LONGVIEW POLICE DEPARTMENT

518 W. SOUTH ST. LONGVIEW, TEXAS 75601

HISTORY

#	DATE	DESCRIPTION

REGISTERED ARCHITECT HAROLD E. SARGENT 9941 STATE OF TEXAS
08/19/2020

WALL SECTIONS - ELEVATORS

21719
08/19/2020

A517

BID ISSUE

8/19/2020 3:17:44 PM

E:\Revit Locals\APD_CENTRAL_A19_bcochner_OR-19-2020.rvt

© 2020 Brinkley Sargent Wigginton Architects, Inc.

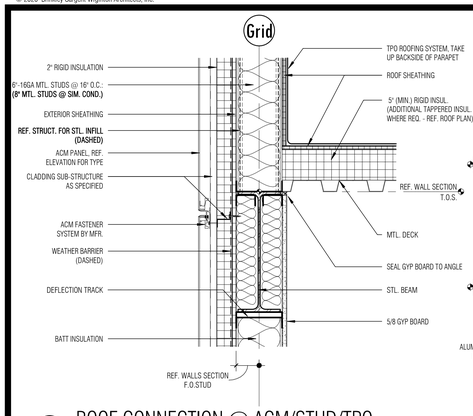

1 ROOF CONNECTION @ ACM/STUD/TPO
SCALE: 1 1/2" = 1'-0"

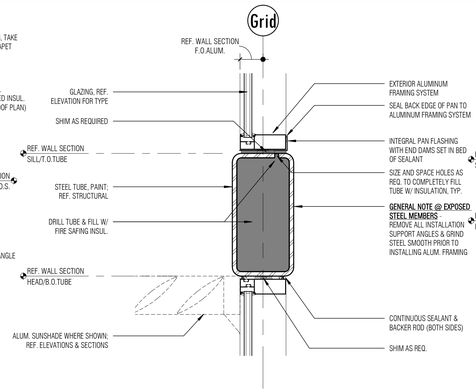

2 STOREFRONT HEAD/SILL @ STL. TUBE
SCALE: 1 1/2" = 1'-0"

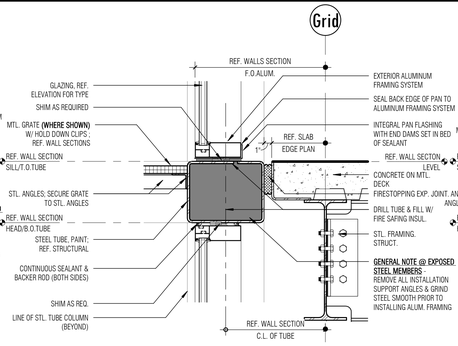

3 STOREFRONT HEAD/SILL @ STL. TUBE
SCALE: 1 1/2" = 1'-0"

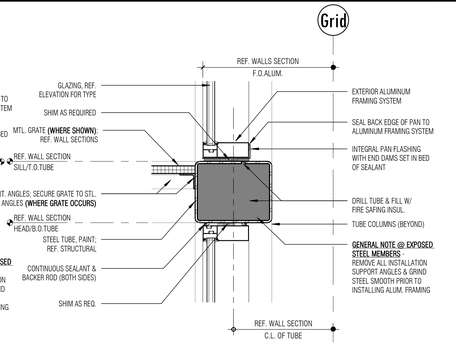

4 STOREFRONT HEAD/SILL @ STL. TUBE
SCALE: 1 1/2" = 1'-0"

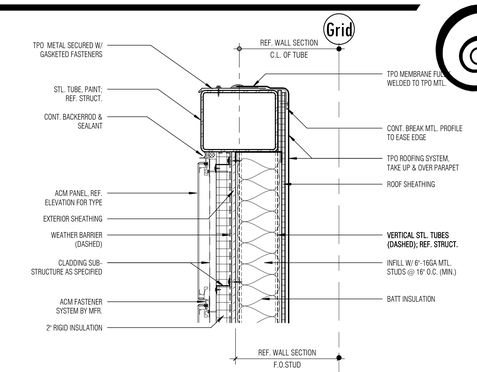

5 COPING @ ACM/STUD/TPO
SCALE: 1 1/2" = 1'-0"

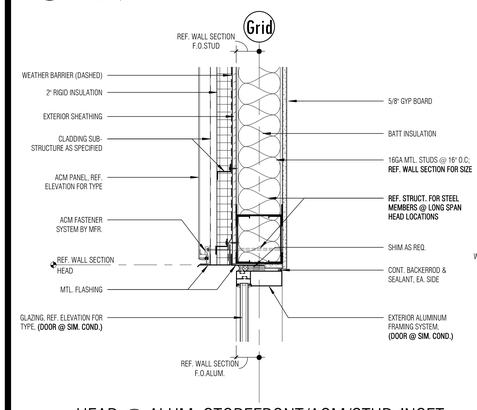

6 HEAD @ ALUM. STOREFRONT/ACM/STUD-INSET
SCALE: 1 1/2" = 1'-0"

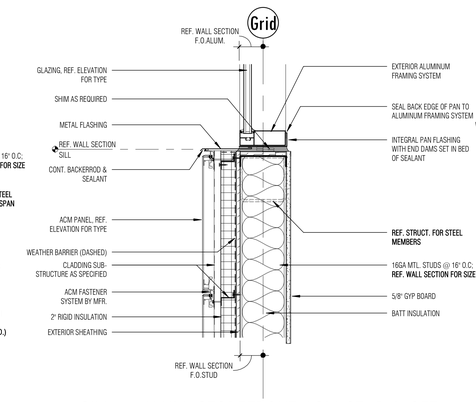

7 SILL @ ALUM. STOREFRONT/ACM/STUD-INSET
SCALE: 1 1/2" = 1'-0"

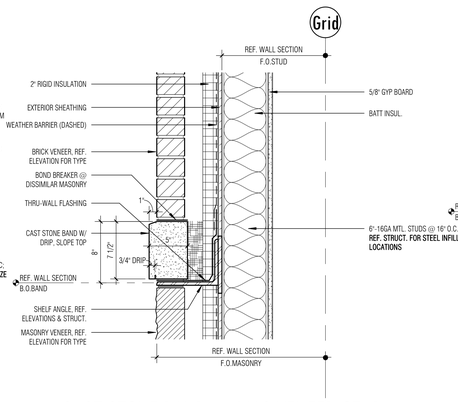

8 CAST STONE BAND @ MAS VENEER/STUD
SCALE: 1 1/2" = 1'-0"

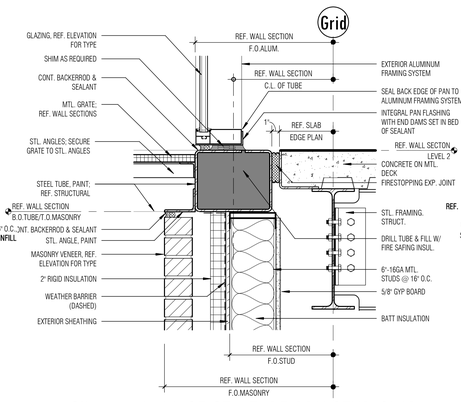

9 SILL @ ALUM. SF/STL. TUBE/BRK/STUD/SLAB
SCALE: 1 1/2" = 1'-0"

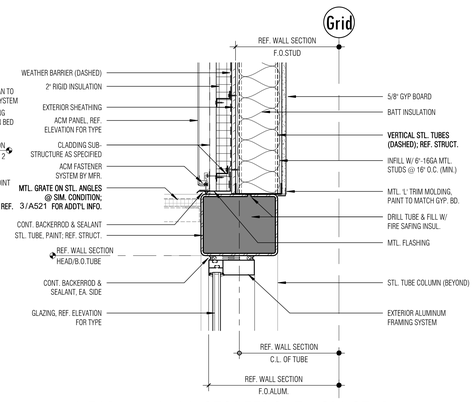

10 HEAD @ ALUM. STOREFRONT/ACM/STUD
SCALE: 1 1/2" = 1'-0"

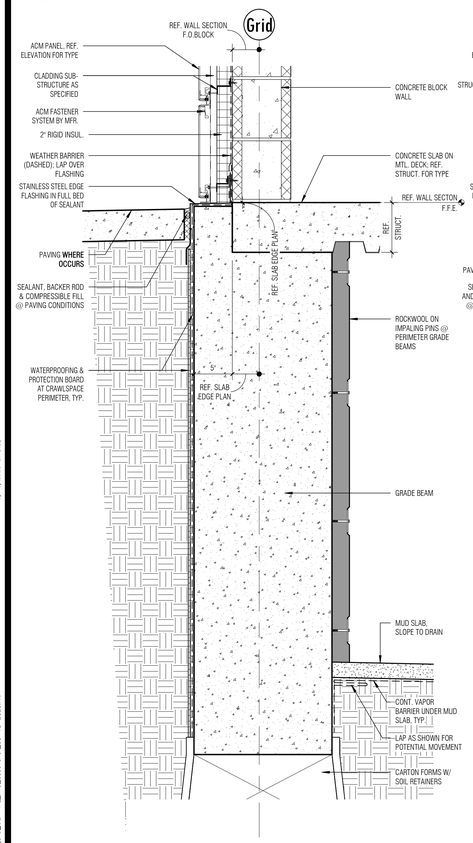

16 LEDGE @ ACM/CMU/CRAWLSPACE
SCALE: 1 1/2" = 1'-0"

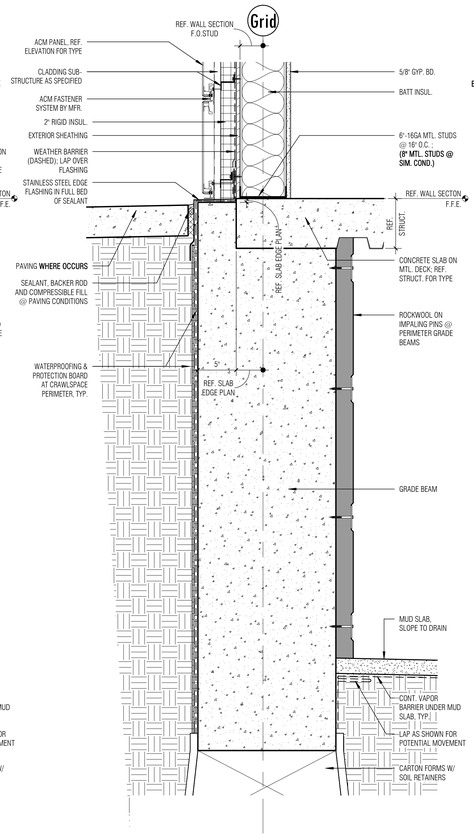

17 LEDGE @ ACM/STUD/CRAWLSPACE
SCALE: 1 1/2" = 1'-0"

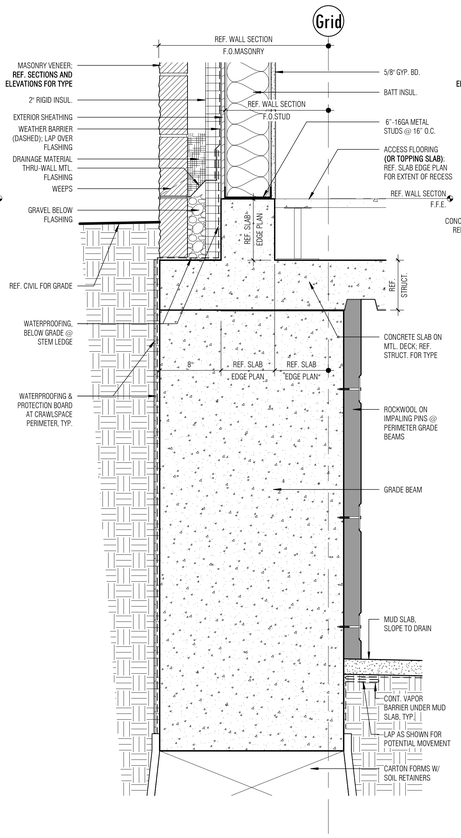

18 CURB @ MAS VENEER/STUD/CRAWLSPACE
SCALE: 1 1/2" = 1'-0"

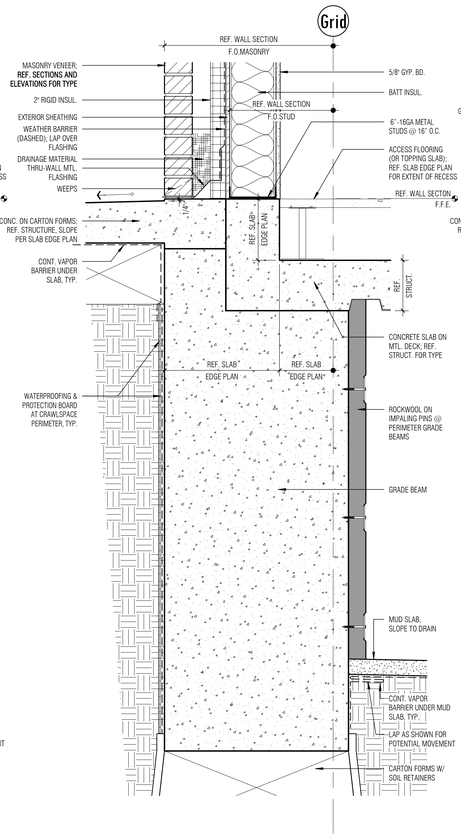

19 CURB/PLINTH @ MAS VENEER/STUD/CRAWLSPACE
SCALE: 1 1/2" = 1'-0"

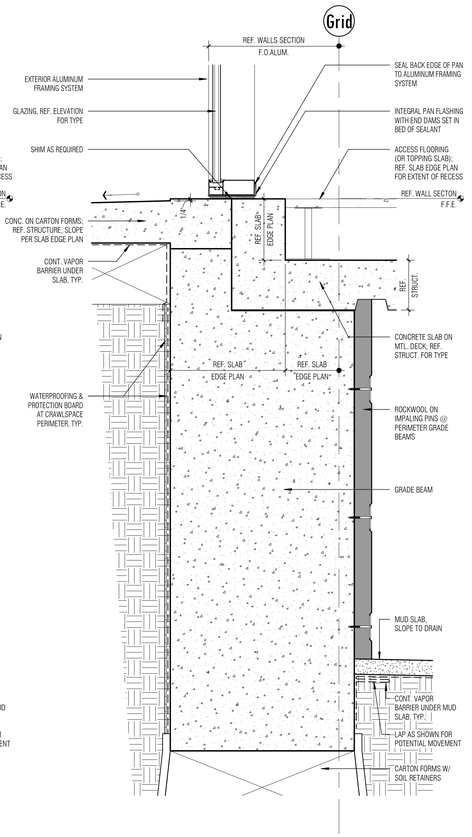

20 CURB/PLINTH @ MAS VENEER/STUD/CRAWLSPACE
SCALE: 1 1/2" = 1'-0"

BRINKLEY SARGENT WIGGINTON ARCHITECTS

Architect: Brinkley Sargent Wigginton Architects (972) 960-9970
Landscape: Kendall Landscape Architecture (214) 739-3226
Structural: L.A. Fuess Partners, Inc (214) 593-1118
MEP: M-E Engineers (214) 741-1589
Civil: KSA Engineers, Inc (903) 236-7700
Technology: M-E Engineers (303) 421-6656

LONGVIEW POLICE DEPARTMENT

518 W. SOUTH ST. LONGVIEW, TEXAS 75601

HISTORY

#	DATE	DESCRIPTION

REGISTERED ARCHITECT HAROLD E. SARGENT 9941 STATE OF TEXAS
08/19/2020

SECTION DETAILS

BID ISSUE

21719
08/19/2020

A521

8/19/2020 3:18:52 PM

D:\Revit Locals\JPD_CENTRAL_A19_brockman_08-19-2020.rvt

© 2020 Brinkley Sargent Wigginton Architects, Inc.

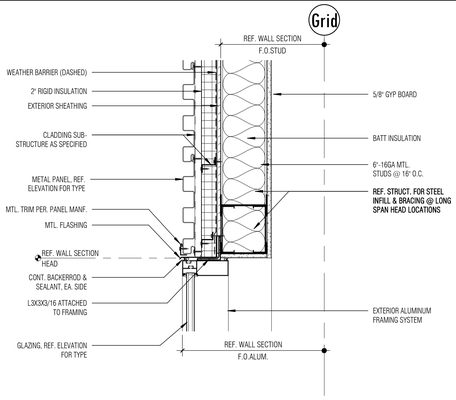

1 HEAD @ ALUM. STOREFRONT/HORIZ MP/STUD
SCALE: 1 1/2" = 1'-0"

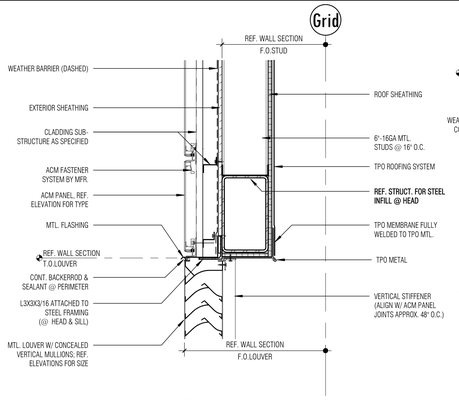

2 HEAD @ LOUVER/ACM/STUD/STUD
SCALE: 1 1/2" = 1'-0"

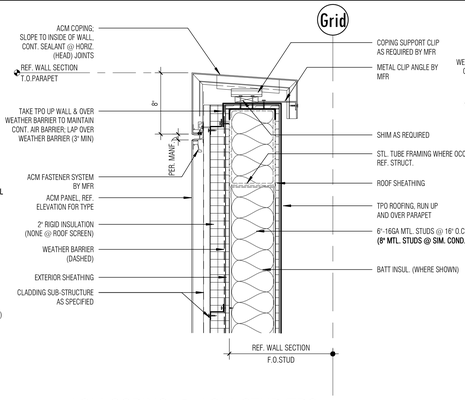

3 ACM COPING @ ACM/STUD/TPO
SCALE: 1 1/2" = 1'-0"

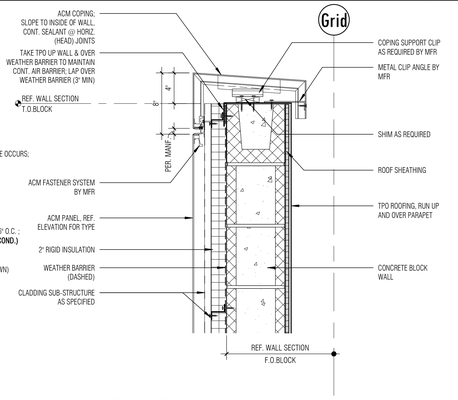

4 ACM COPING @ ACM/CMU/TPO
SCALE: 1 1/2" = 1'-0"

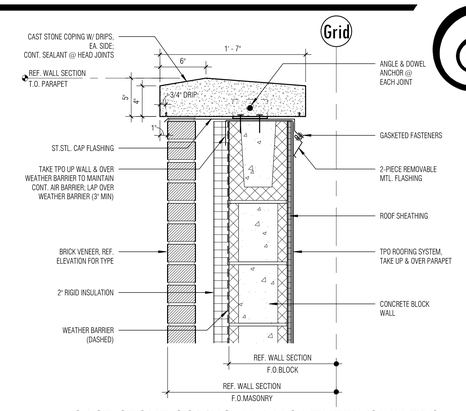

5 CAST STONE COPING @ MAS VENEER/CMU/TPO
SCALE: 1 1/2" = 1'-0"

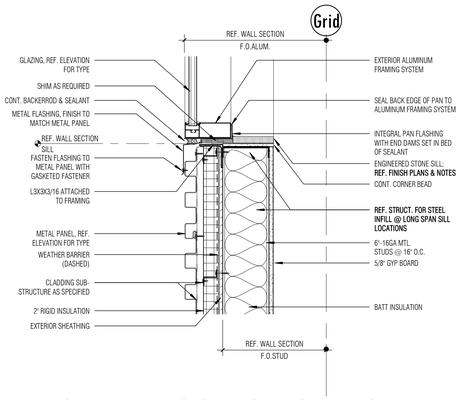

6 SILL @ ALUM. STOREFRONT/HORIZ MP/STUD
SCALE: 1 1/2" = 1'-0"

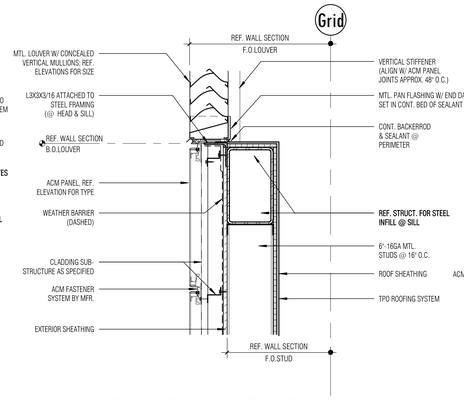

7 SILL @ LOUVER/ACM/STUD/TPO
SCALE: 1 1/2" = 1'-0"

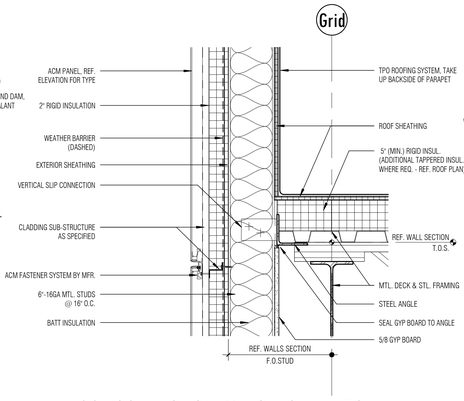

8 ROOF CONNECTION @ ACM/STUD/TPO
SCALE: 1 1/2" = 1'-0"

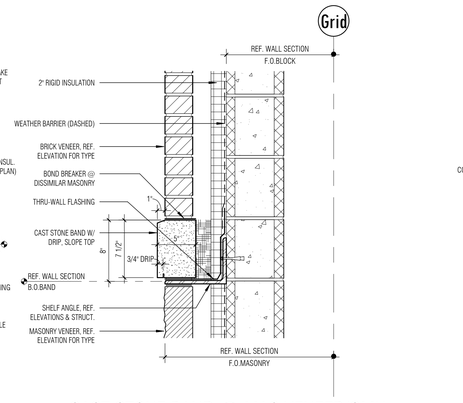

9 CAST STONE BAND @ MAS VENEER/CMU
SCALE: 1 1/2" = 1'-0"

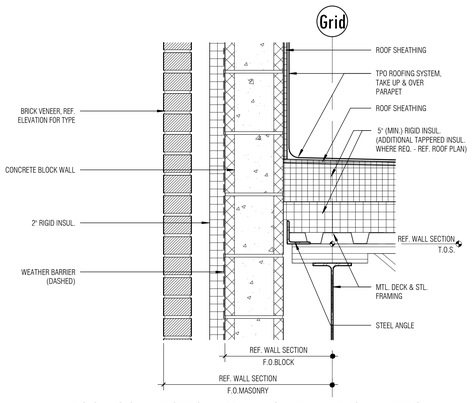

10 ROOF CONNECTION @ MAS VENEER/CMU/TPO
SCALE: 1 1/2" = 1'-0"

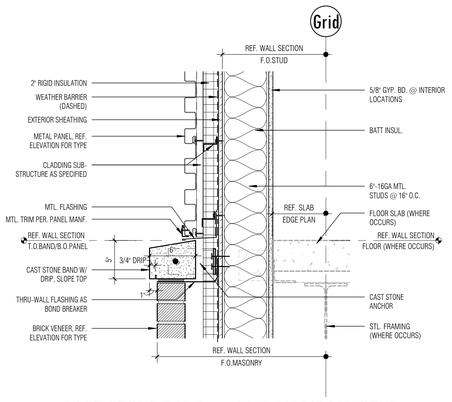

11 CAST STONE BAND @ MAS/HORIZ MP/STUD
SCALE: 1 1/2" = 1'-0"

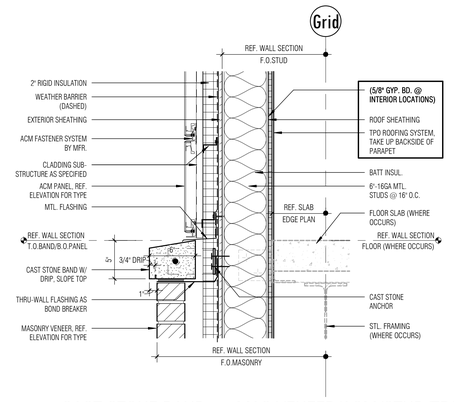

12 CAST STONE BAND @ MAS VENEER/ACM/STUD/TPO
SCALE: 1 1/2" = 1'-0"

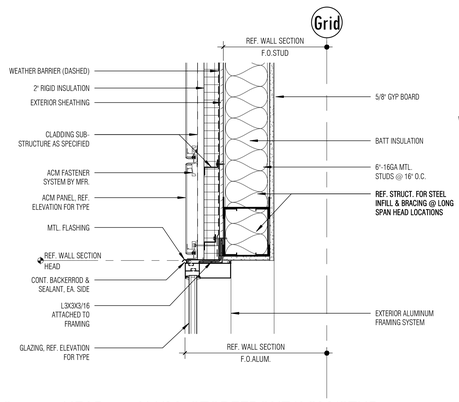

13 HEAD @ ALUM. STOREFRONT/ACM/STUD
SCALE: 1 1/2" = 1'-0"

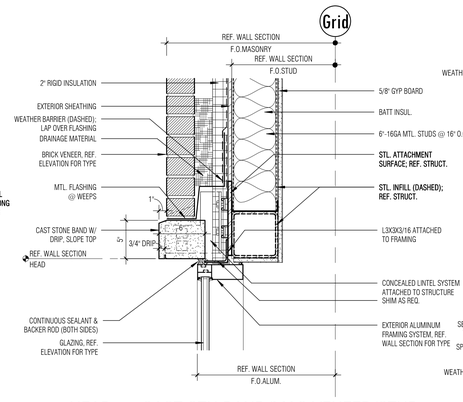

14 HEAD @ CAST STN BAND/MAS VENEER/STUD
SCALE: 1 1/2" = 1'-0"

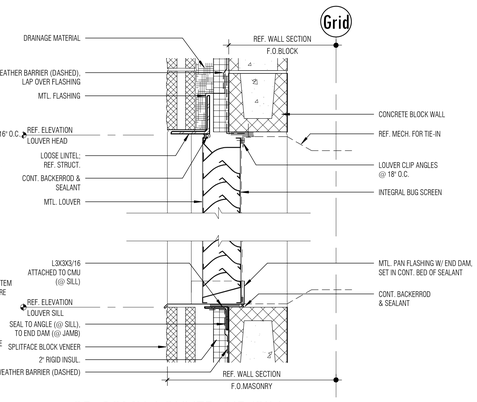

15 SD-8CMU-LOUVER HD/SILL
SCALE: 1 1/2" = 1'-0"

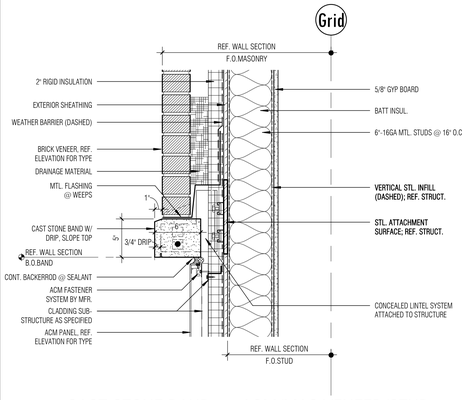

16 CAST STONE BAND @ ACM/MAS VENEER/STUD
SCALE: 1 1/2" = 1'-0"

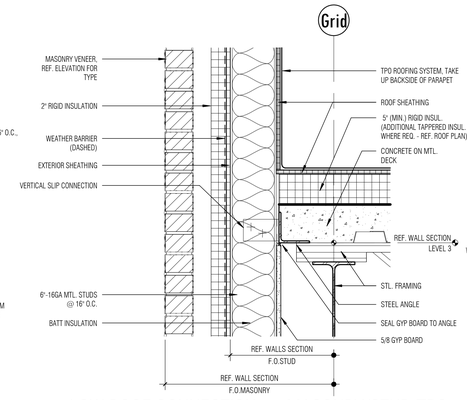

17 LOW ROOF CONNECTION @ MASONRY/STUD/TPO
SCALE: 1 1/2" = 1'-0"

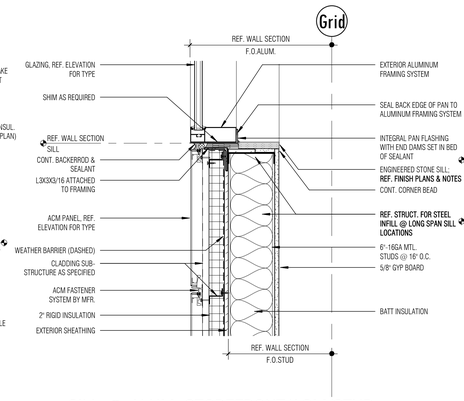

18 SILL @ ALUM. STOREFRONT/ACM/STUD
SCALE: 1 1/2" = 1'-0"

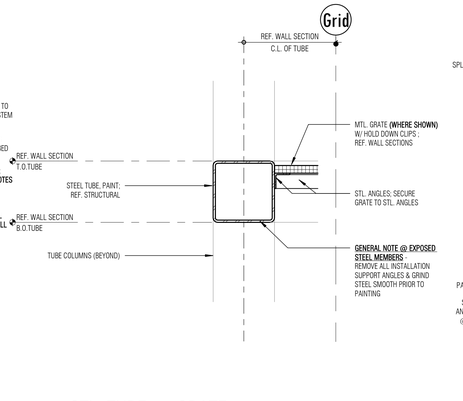

19 STL. TUBE @ GRATE
SCALE: 1 1/2" = 1'-0"

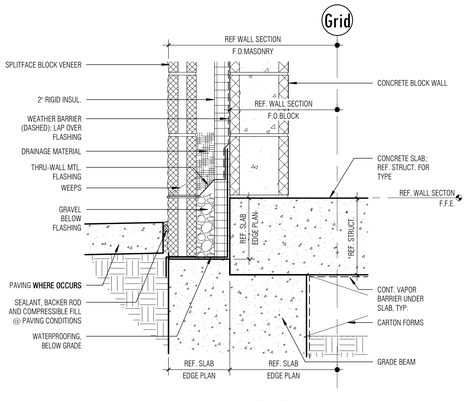

20 BRICK LEDGE @ MAS VENEER/CMU
SCALE: 1 1/2" = 1'-0"

Architect: Brinkley Sargent Wigginton Architects (972) 960-9970
Landscape: Kendall Landscape Architecture (214) 739-3226
Structural: L.A. Fuess Partners, Inc (214) 593-1118
MEP: M-E Engineers (214) 741-1589
Civil: KSA Engineers, Inc (903) 236-7700
Technology: M-E Engineers (303) 421-6656

BRINKLEY SARGENT WIGINTON ARCHITECTS

LONGVIEW POLICE DEPARTMENT

518 W. SOUTH ST. LONGVIEW, TEXAS 75601

HISTORY

#	DATE	DESCRIPTION

REGISTERED ARCHITECT HAROLD E. SARGENT 9941 STATE OF TEXAS
08/19/2020

SECTION DETAILS

21719
08/19/2020

A522

BID ISSUE

8/19/2020 3:19:31 PM

D:\Revit Locals\PD_CENTRAL_A19_Sarchamer_08-19-2020.rvt

© 2020 Brinkley Sargent Wiginton Architects, Inc.

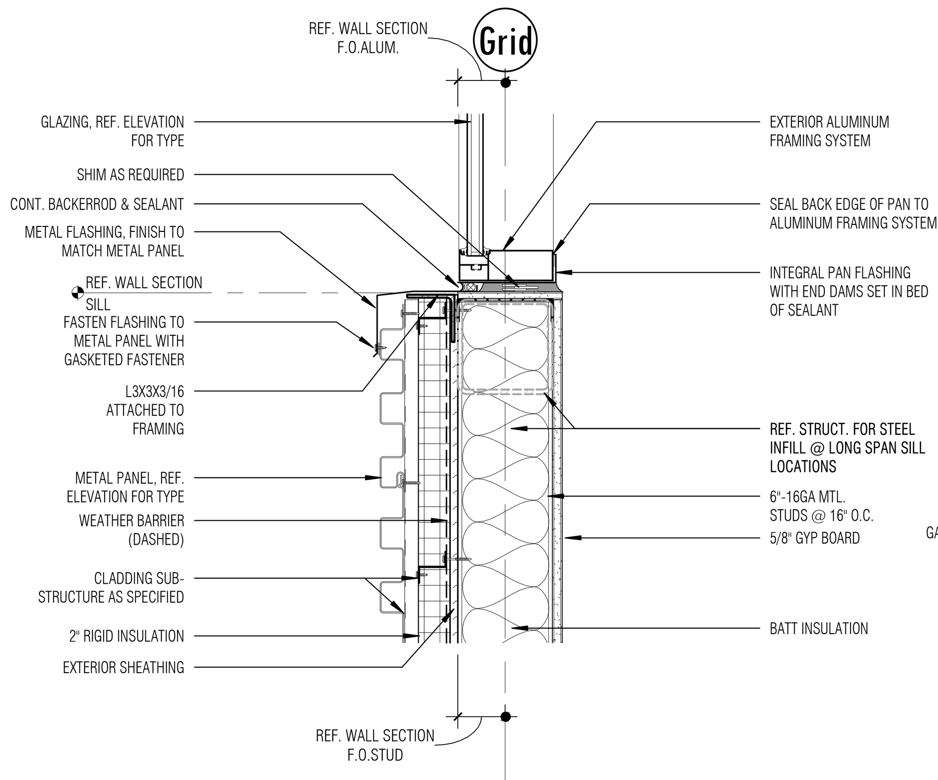

1 SILL @ ALUM. STFRNT/HORIZ MP/STUD - INSET

SCALE: 1 1/2" = 1'-0"

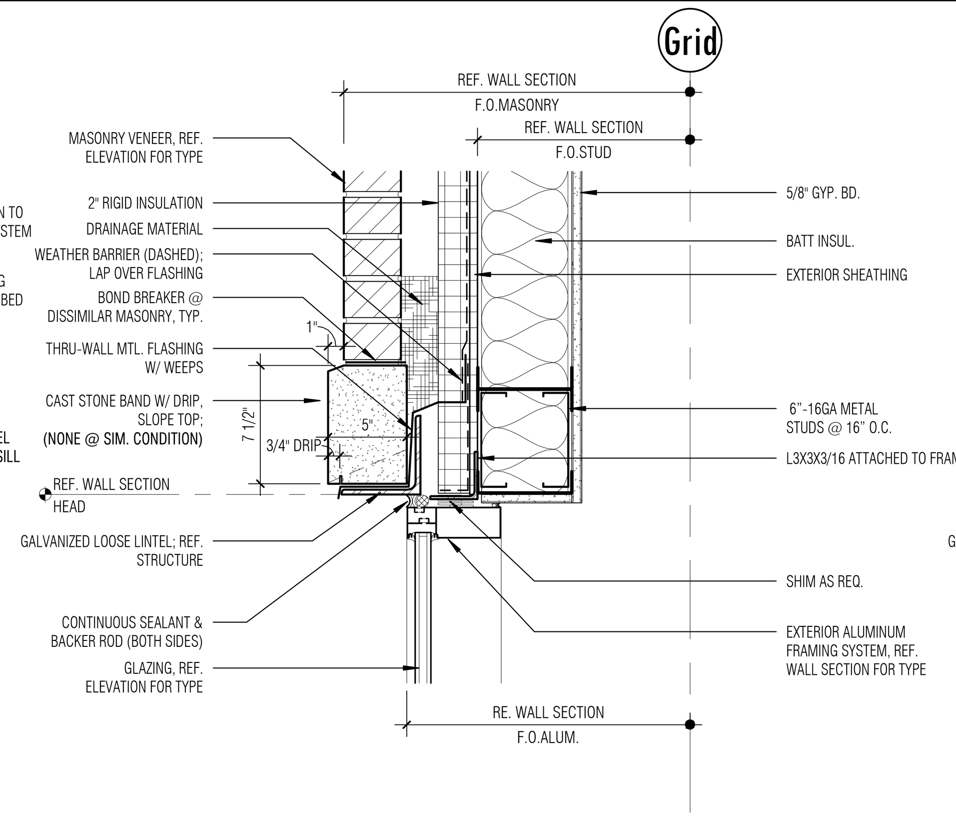

2 HEAD @ ALUM.SF/MAS VEN./LOOSE LINTEL/STUD

SCALE: 1 1/2" = 1'-0"

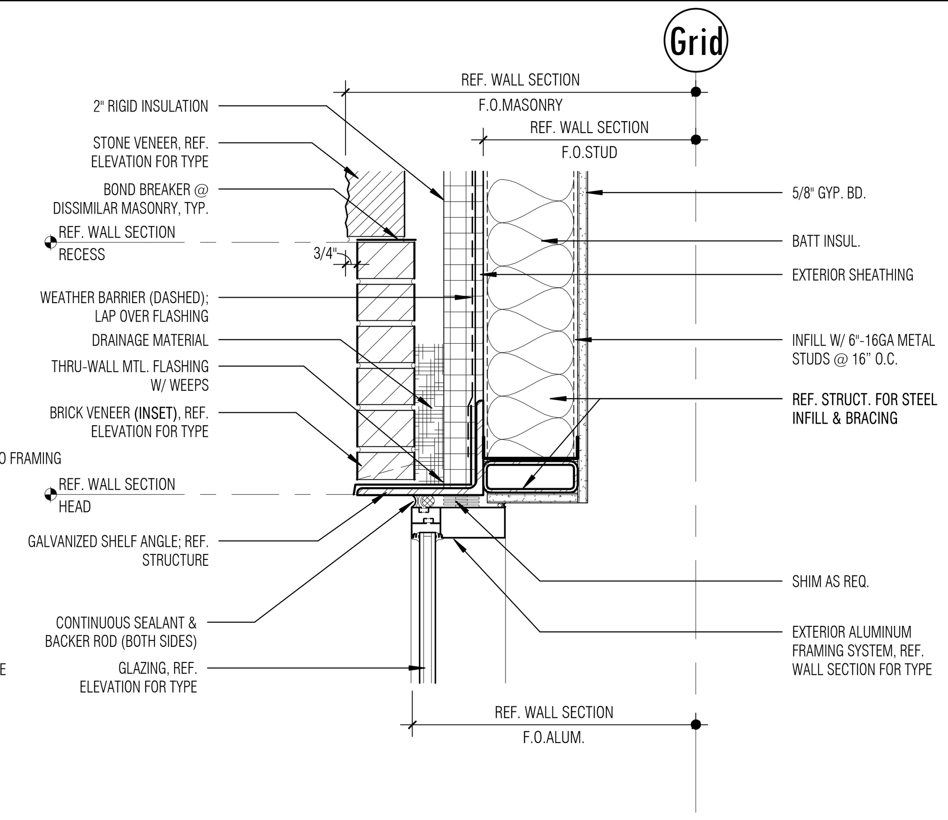

3 HEAD @ ALUM.SF/MAS VEN./SHELF ANGLE/STUD

SCALE: 1 1/2" = 1'-0"

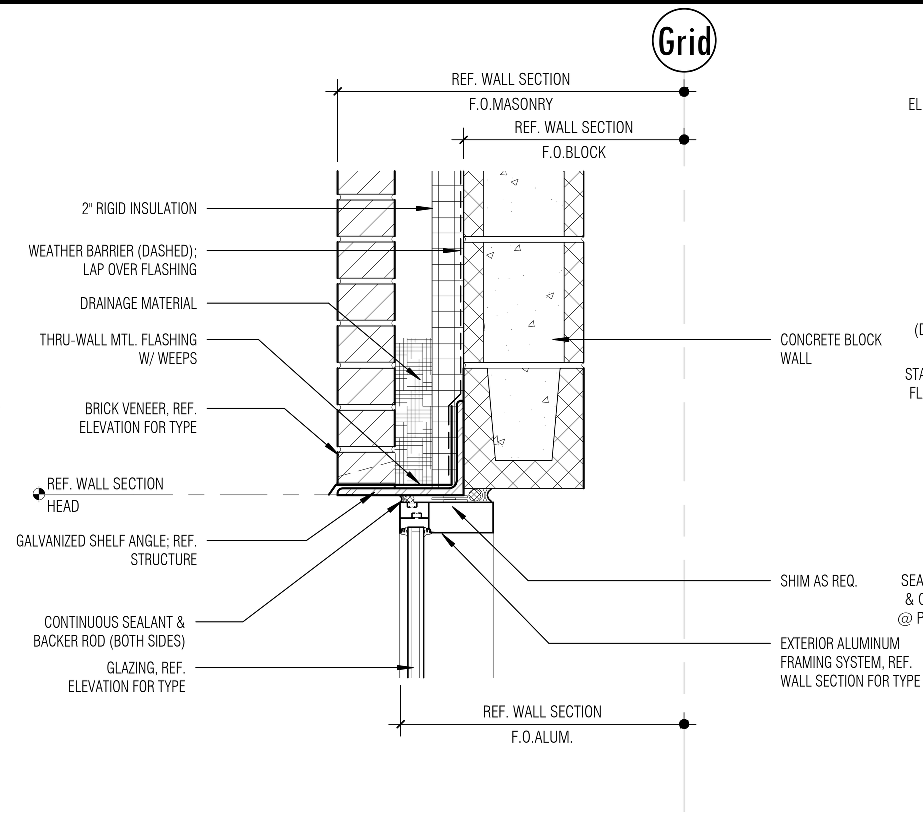

4 HEAD @ ALUM.SF/MAS VEN./SHELF ANGLE/CMU

SCALE: 1 1/2" = 1'-0"

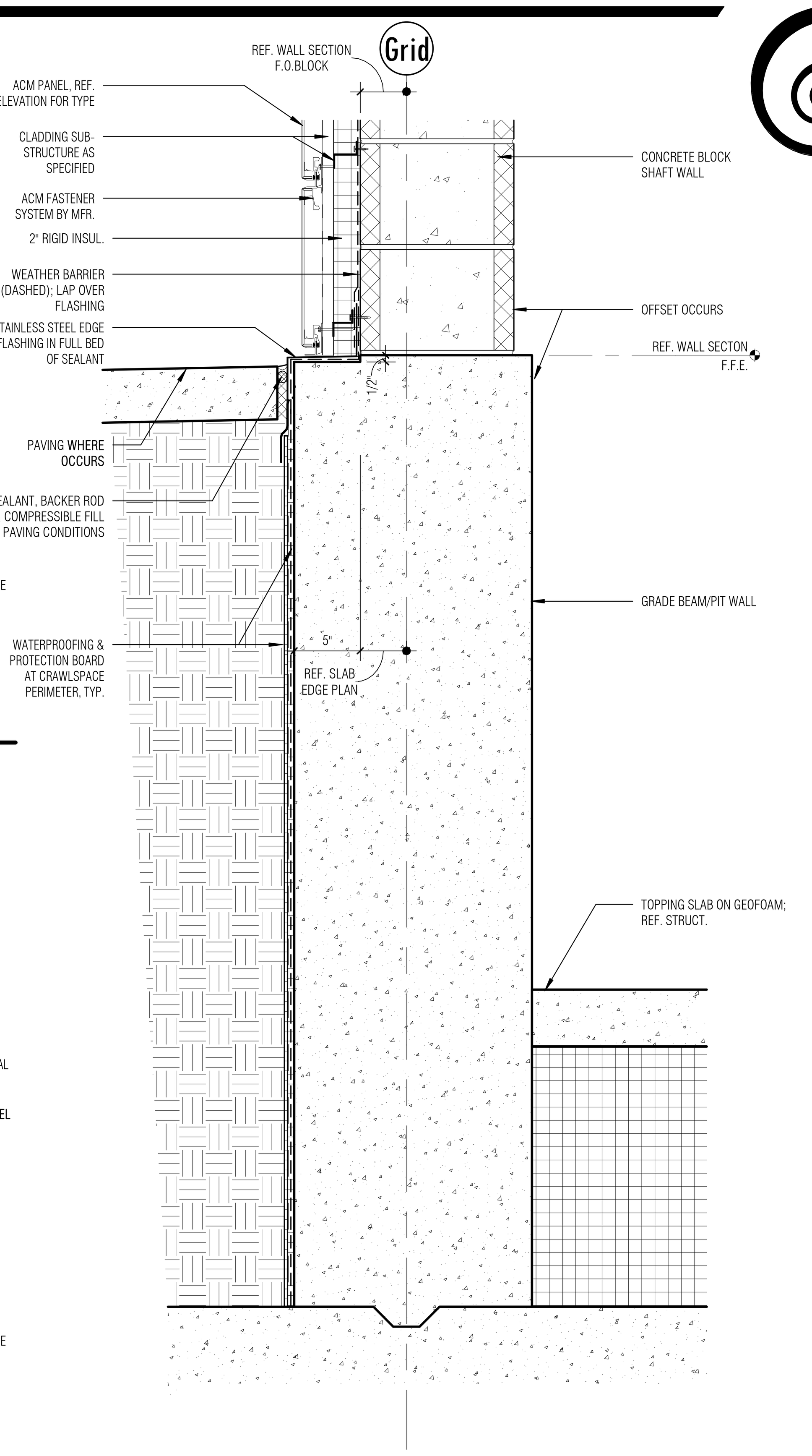

10 LEDGE @ ACM/CMU/ELEVATOR PIT

SCALE: 1 1/2" = 1'-0"

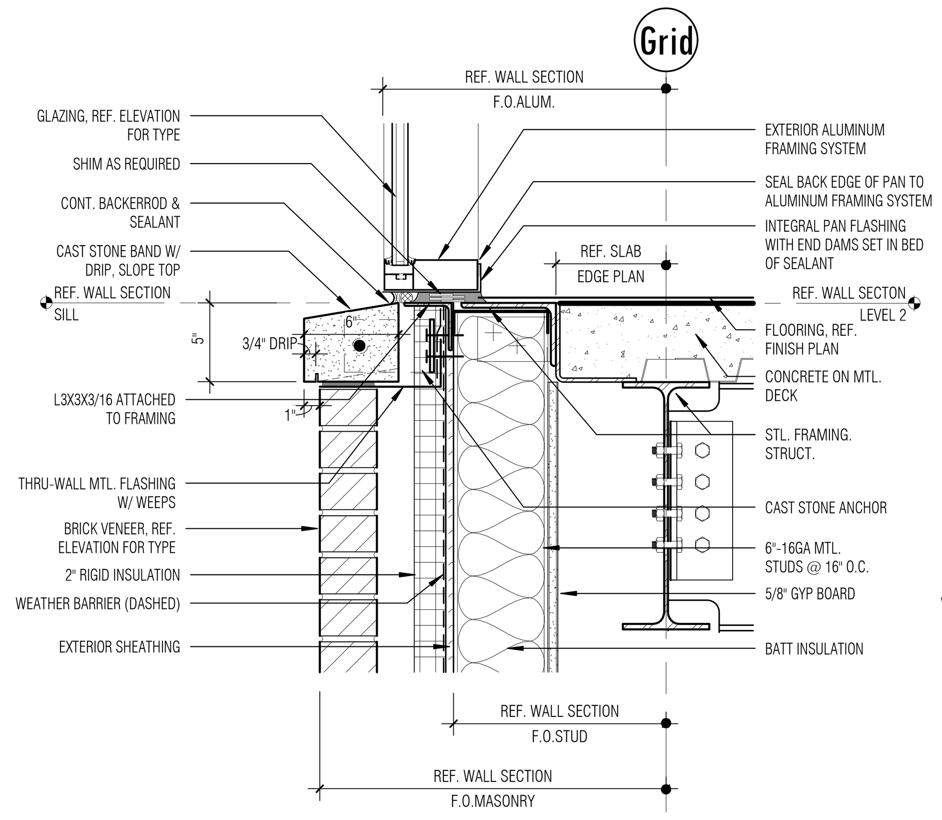

6 SILL @ ALUM. SF/CAST STONE/STUD/SLAB

SCALE: 1 1/2" = 1'-0"

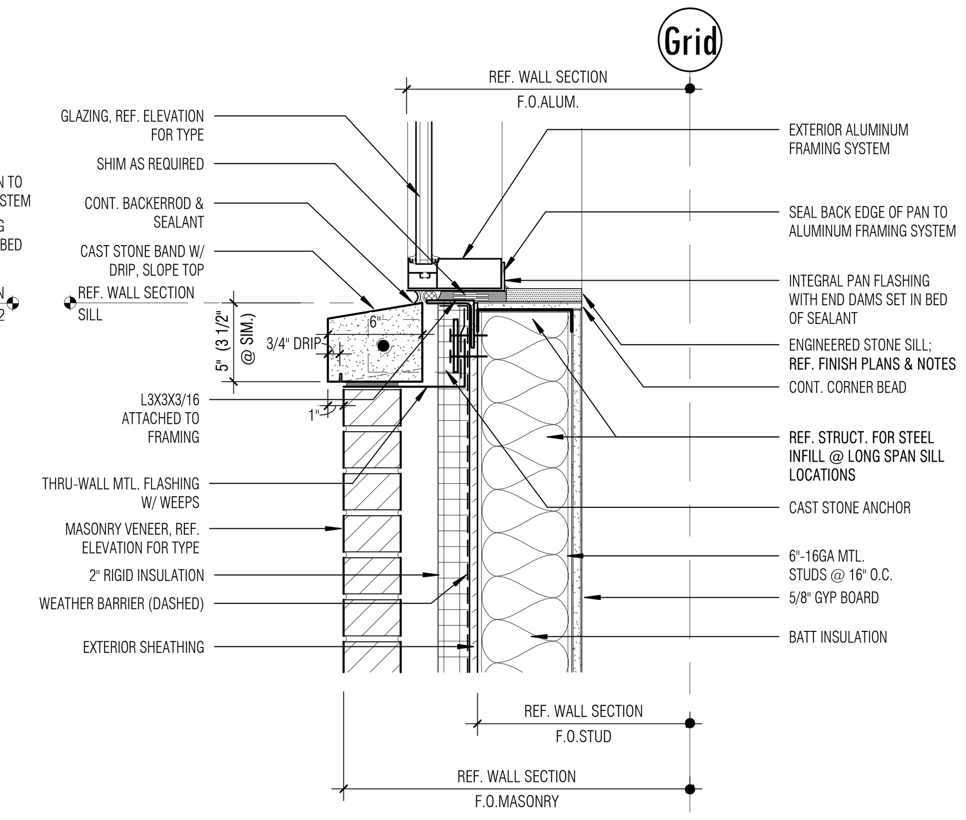

7 SILL @ ALUM. STOREFRONT/CAST STONE/STUD

SCALE: 1 1/2" = 1'-0"

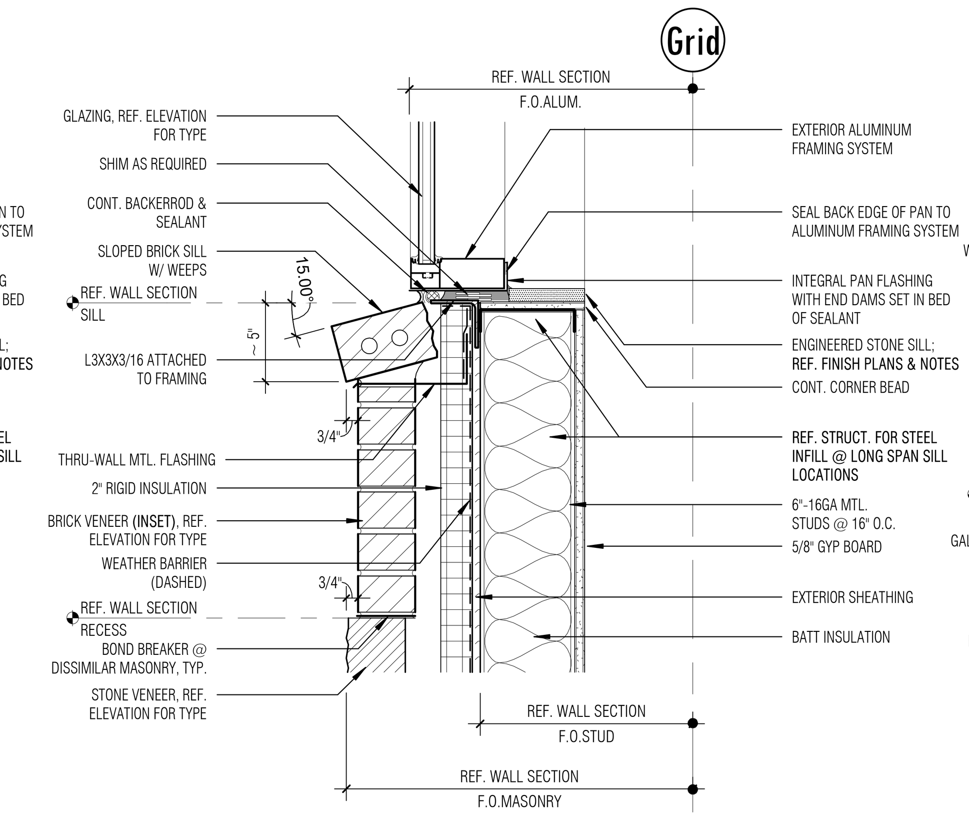

8 SILL @ ALUM. STOREFRONT/BRK/STUD

SCALE: 1 1/2" = 1'-0"

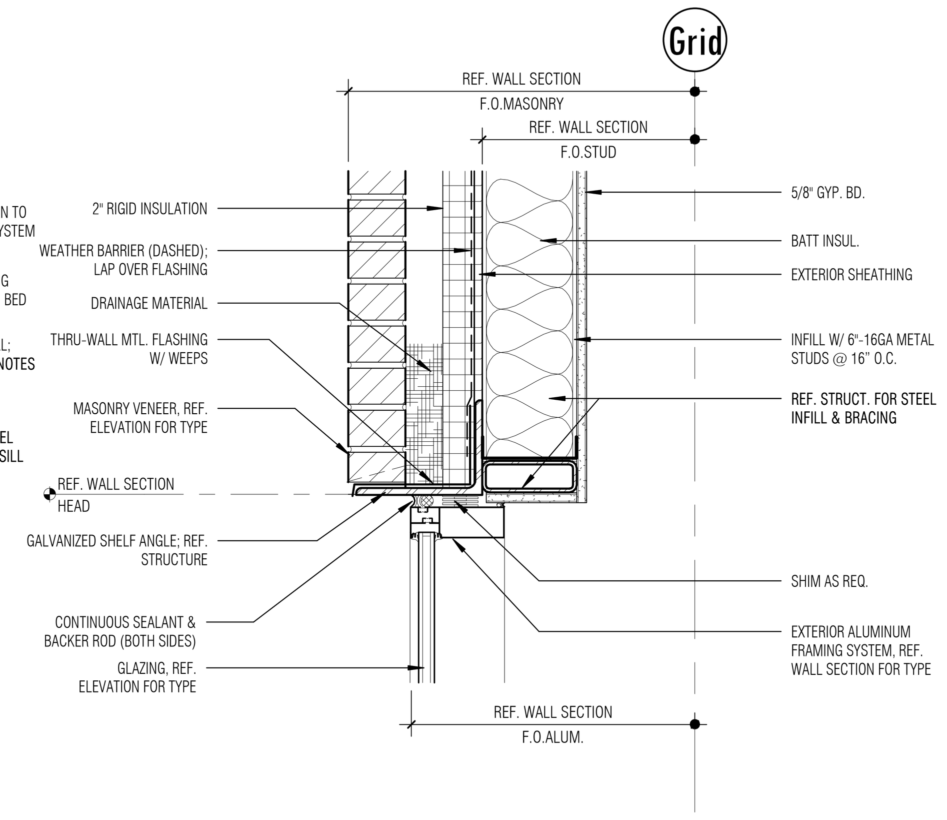

9 HEAD @ ALUM.SF/MAS VEN./SHELF ANGLE/STUD

SCALE: 1 1/2" = 1'-0"

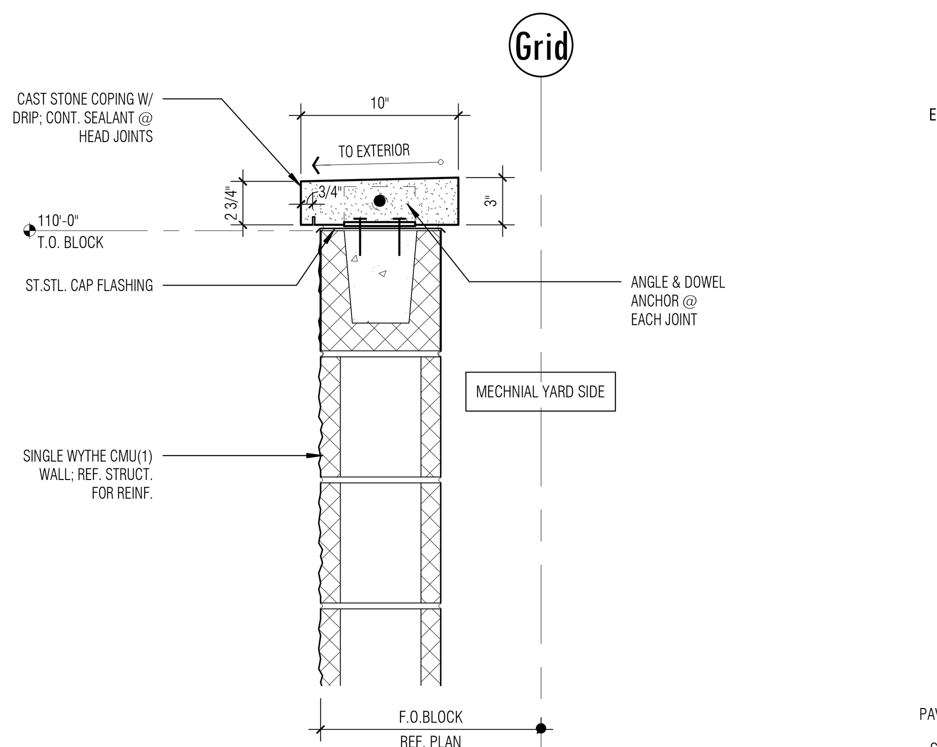

11 CAST STONE COPING @ SINGLE WYTHE CMU

SCALE: 1 1/2" = 1'-0"

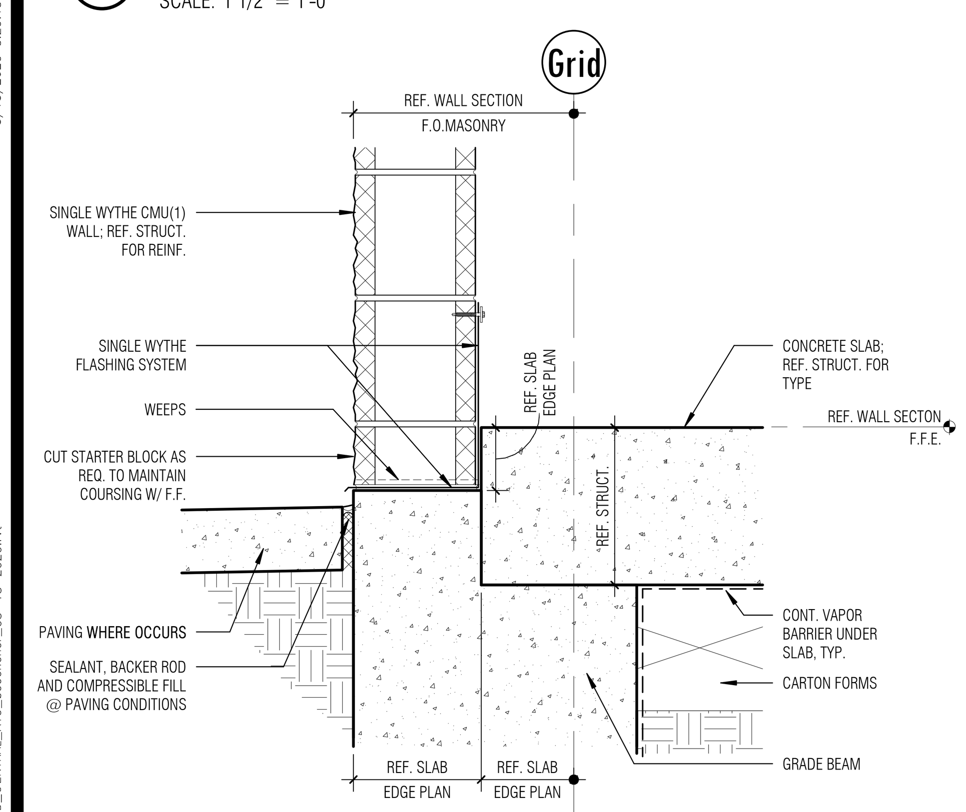

16 BRICK LEDGE @ SINGLE WYTHE CMU

SCALE: 1 1/2" = 1'-0"

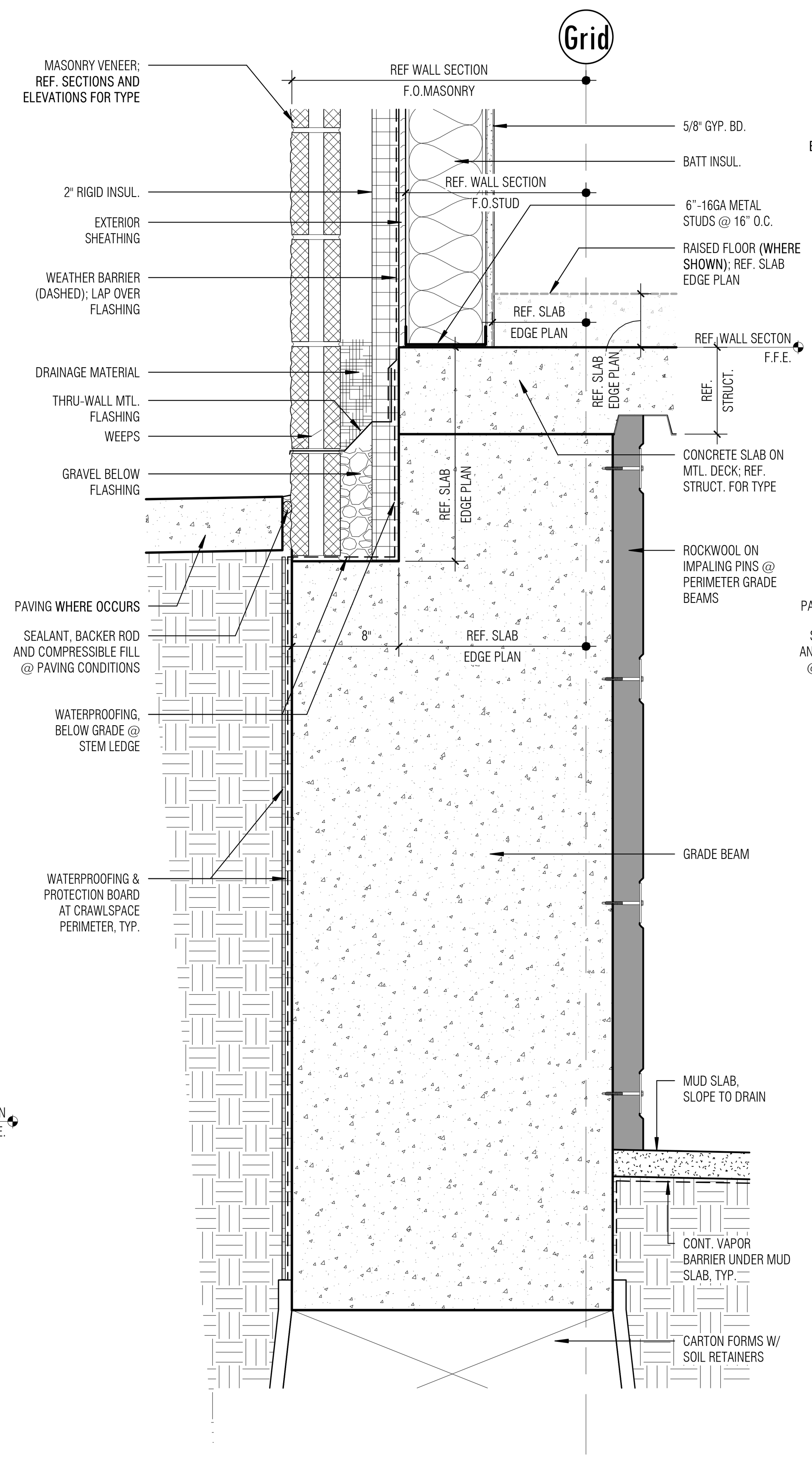

17 BRICK LEDGE @ MAS VENEER/STUD/CRAWLSPACE

SCALE: 1 1/2" = 1'-0"

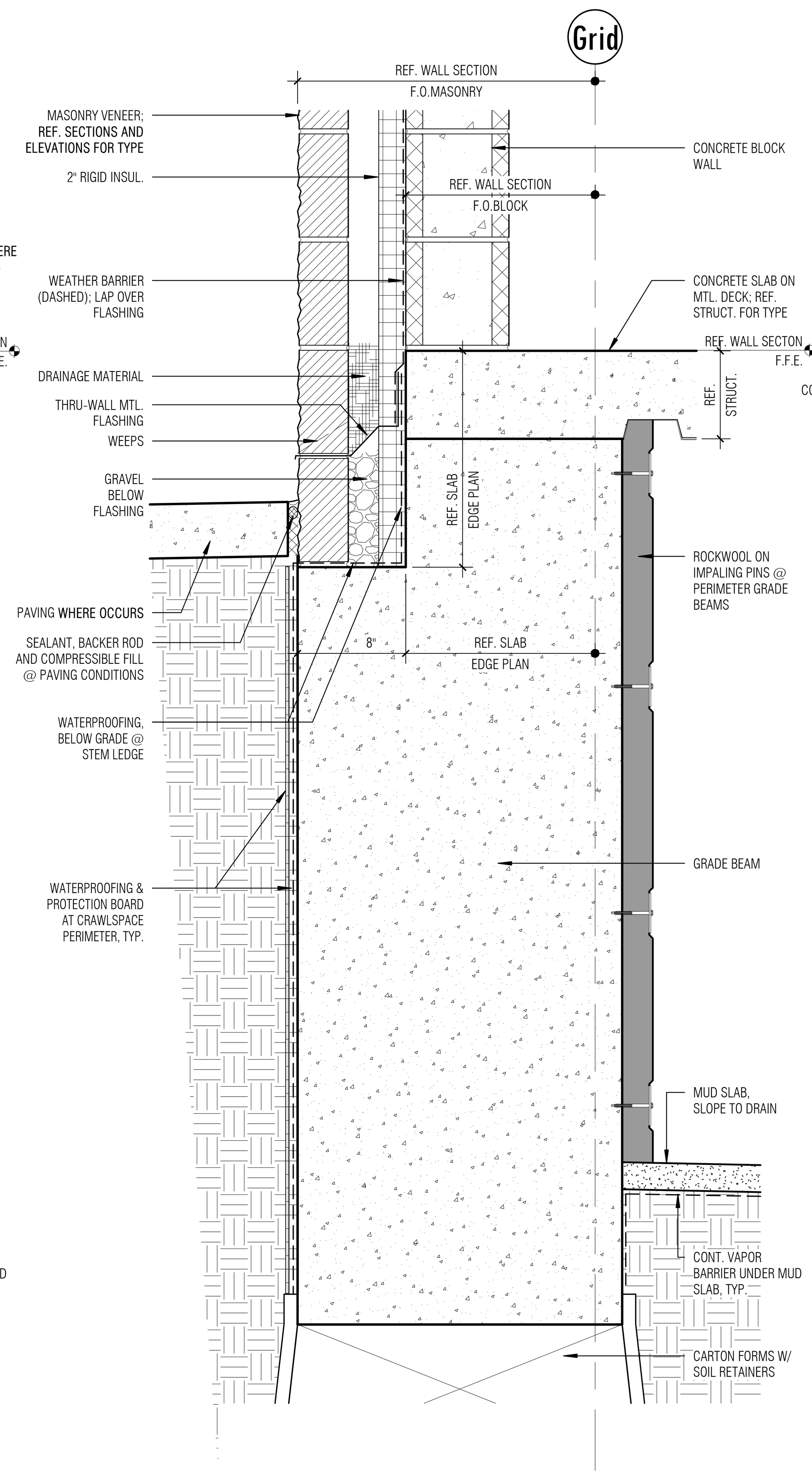

18 BRICK LEDGE @ MAS VENEER/CMU/CRAWLSPACE

SCALE: 1 1/2" = 1'-0"

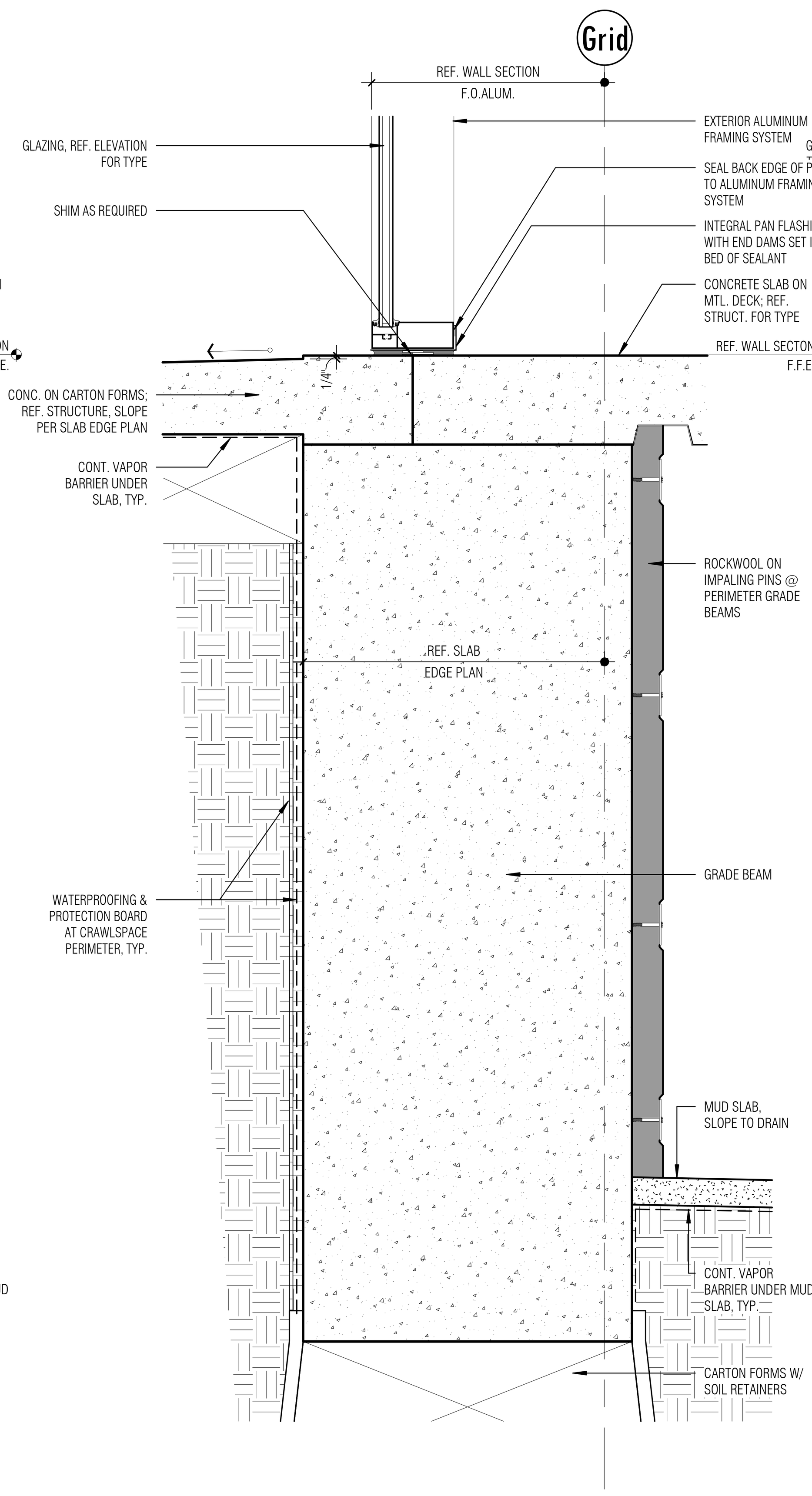

19 SILL @ ALUM. STOREFRONT/CRAWLSPACE/PLINTH

SCALE: 1 1/2" = 1'-0"

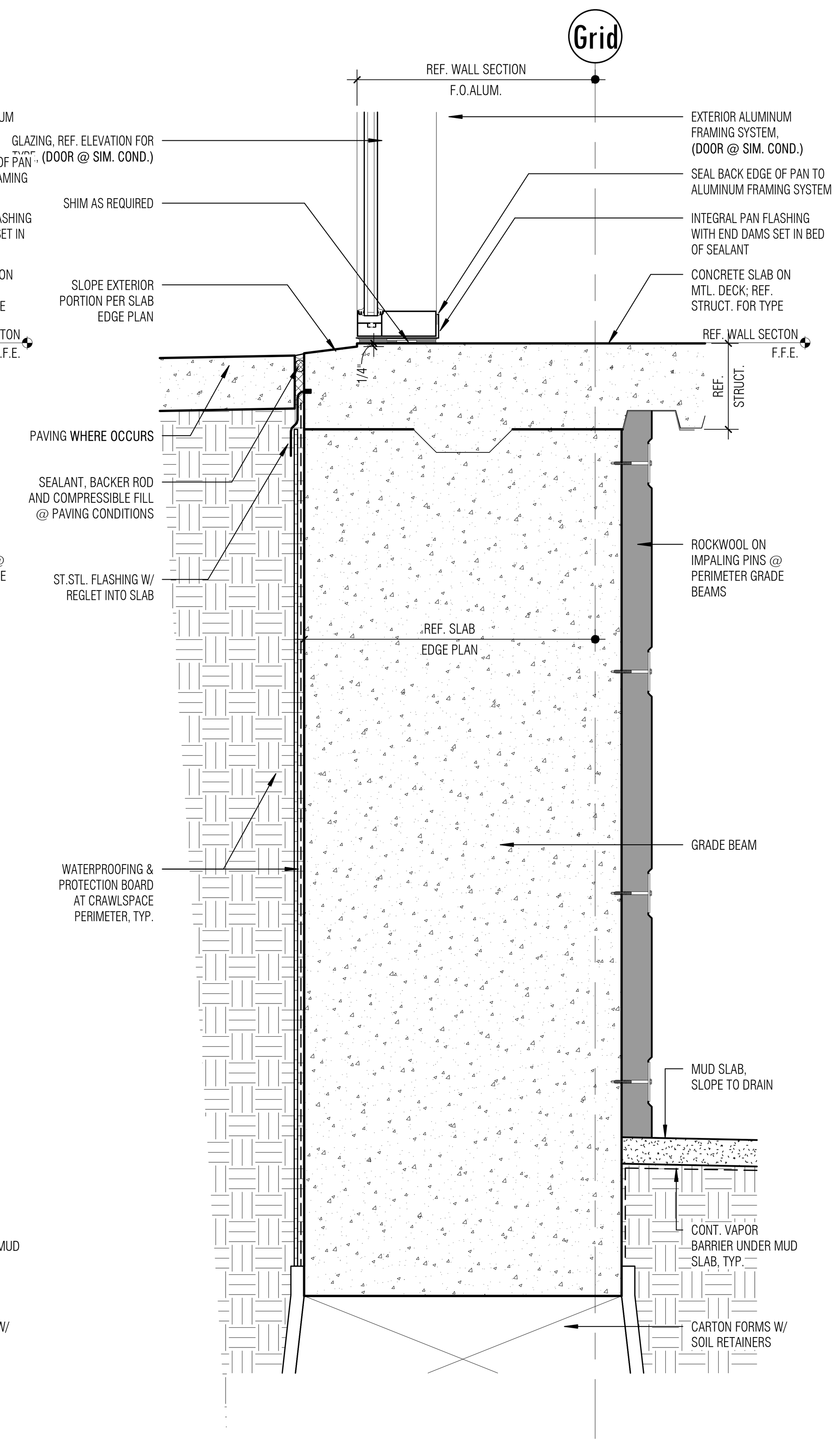

20 SILL @ ALUM. STOREFRONT/CRAWLSPACE

SCALE: 1 1/2" = 1'-0"

Architect: Brinkley Sargent Wiginton Architects (972) 960-9970
Landscape: Kendall Landscape Architecture (214) 739-3226
Structural: L.A. Fuess Partners, Inc (214) 593-1118
MEP: M-E Engineers (214) 741-1589
Civil: KSA Engineers, Inc (903) 236-7700
Technology: M-E Engineers (303) 421-6656

BRINKLEY SARGENT WIGINTON ARCHITECTS

LONGVIEW POLICE DEPARTMENT

518 W. SOUTH ST. LONGVIEW, TEXAS 75601

HISTORY		
#	DATE	DESCRIPTION

REGISTERED ARCHITECT HAROLD E. SARGENT 9941 STATE OF TEXAS 08/19/2020

SECTION DETAILS

21719
08/19/2020
A523

BID ISSUE

8/18/2020 3:20:15 PM
D:\Revit Locals\LPD_CENTRAL_A19_bcochener_08-18-2020.rvt

© 2020 Brinkley Sargent Wigginton Architects, Inc.

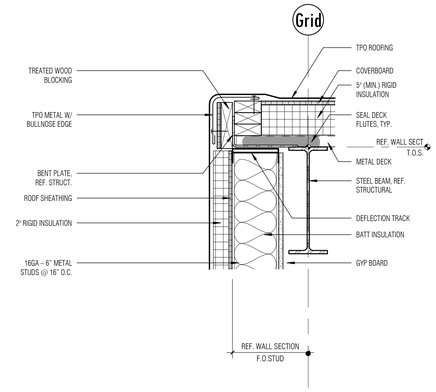

1 ROOF TRANSITION @ STUD/TPO
SCALE: 1 1/2" = 1'-0"

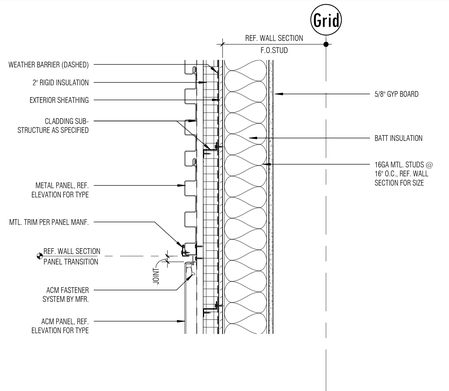

2 PANEL TRANSITION @ HORIZ MP/ACM/STUD
SCALE: 1 1/2" = 1'-0"

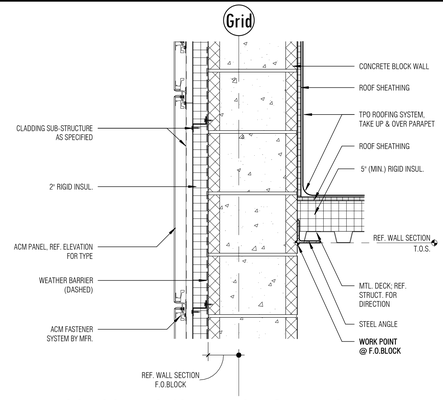

3 ROOF CONNECTION @ ACM/CMU/TPO
SCALE: 1 1/2" = 1'-0"

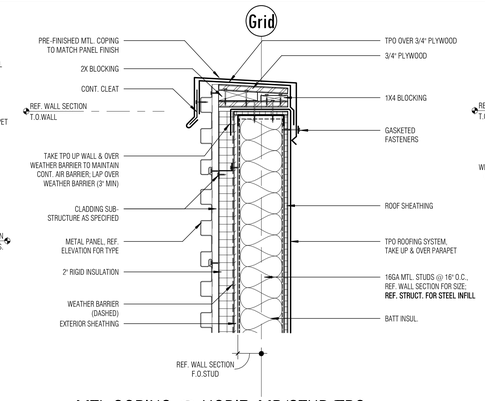

4 MTL COPING @ HORIZ. MP/STUD/TPO
SCALE: 1 1/2" = 1'-0"

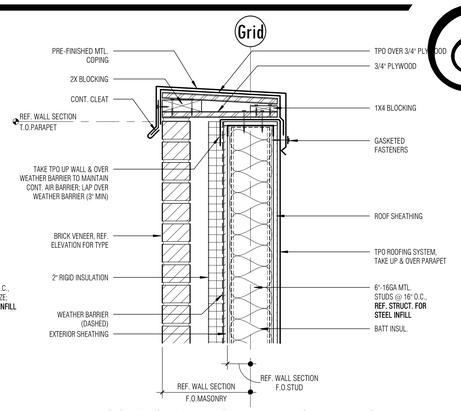

5 MTL COPING @ MAS VENEER/STUD/TPO
SCALE: 1 1/2" = 1'-0"

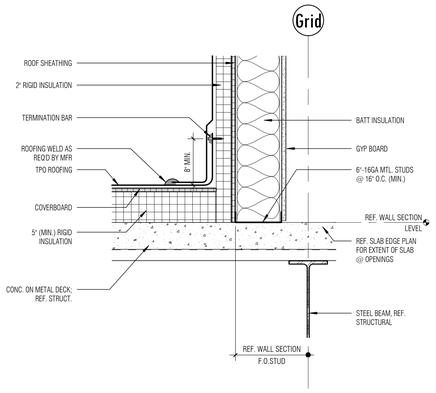

6 ROOF TRANSITION @ STUD/TPO
SCALE: 1 1/2" = 1'-0"

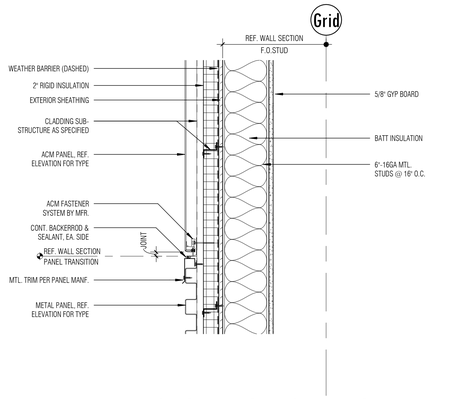

7 PANEL TRANSITION @ ACM/HORIZ MP/STUD
SCALE: 1 1/2" = 1'-0"

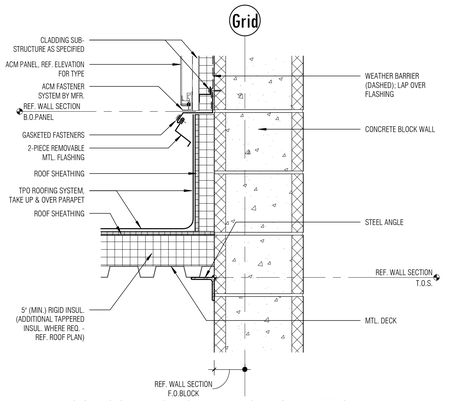

8 ROOF CONNECTION @ ACM/CMU/TPO
SCALE: 1 1/2" = 1'-0"

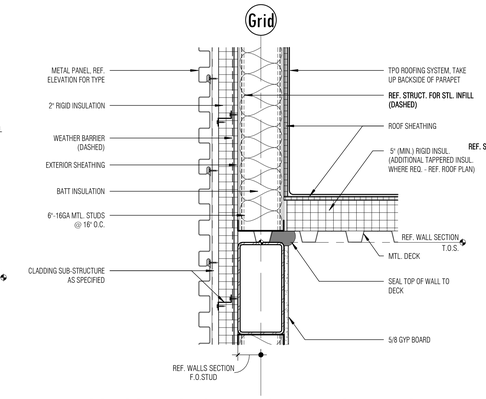

9 ROOF CONNECTION @ HORIZ. MP/STUD/TPO
SCALE: 1 1/2" = 1'-0"

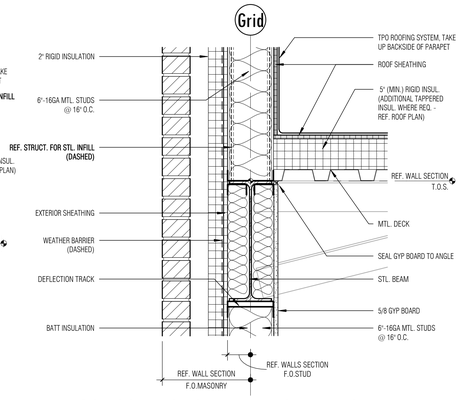

10 ROOF CONNECTION @ BRK/STUD/TPO
SCALE: 1 1/2" = 1'-0"

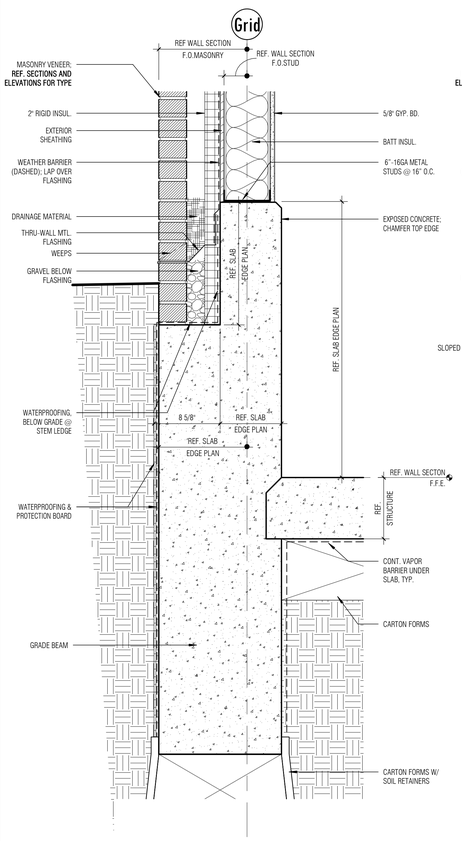

16 BRICK LEDGE @ MAS VENEER/STUD/LOW SLAB
SCALE: 1 1/2" = 1'-0"

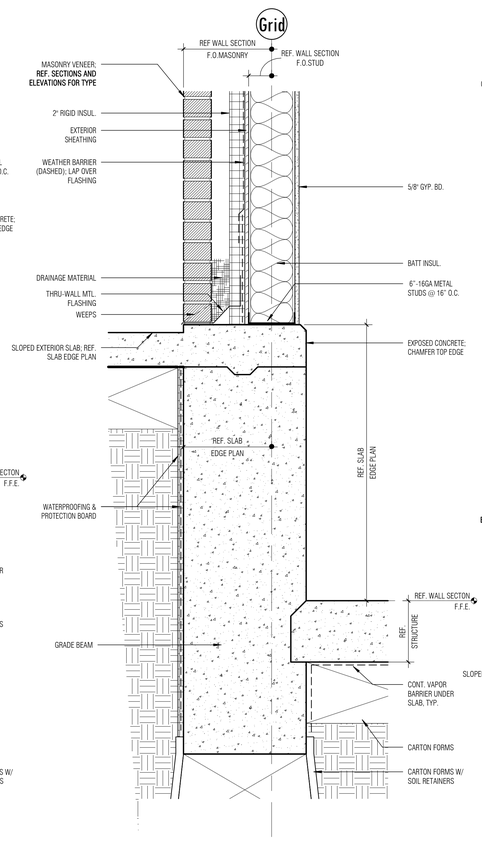

17 EXT. SLAB @ MAS VENEER/STUD/LOW SLAB
SCALE: 1 1/2" = 1'-0"

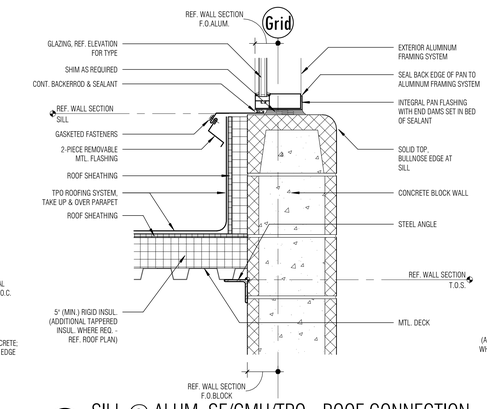

13 SILL @ ALUM. SF/CMU/TPO - ROOF CONNECTION
SCALE: 1 1/2" = 1'-0"

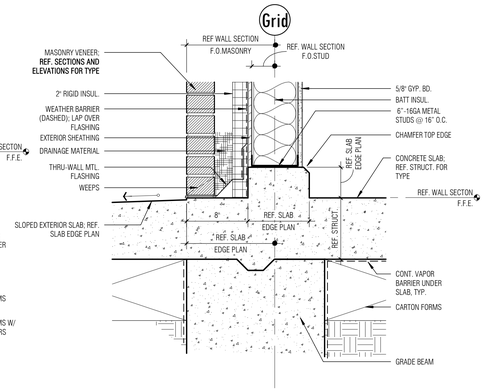

18 STEM WALL @ MAS VENEER/STUD/SLAB
SCALE: 1 1/2" = 1'-0"

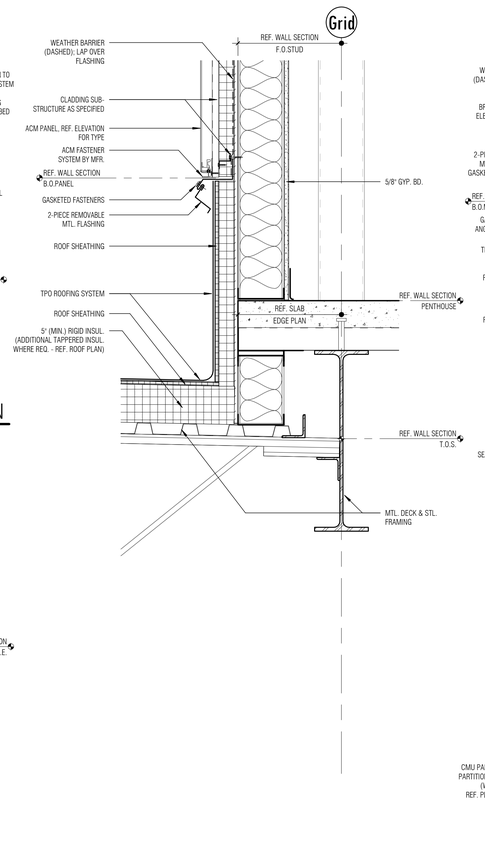

19 ROOF CONNECTION @ ACM/STUD/TPO
SCALE: 1 1/2" = 1'-0"

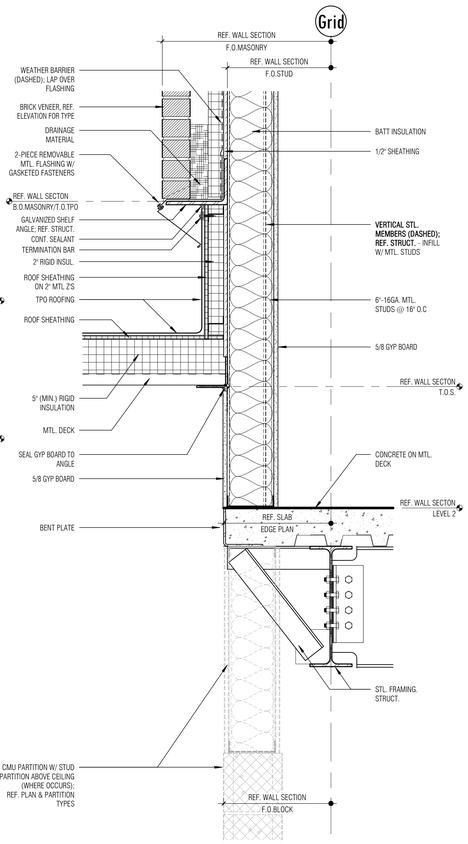

20 ROOF CONNECTION @ BRICK/TPO/LEVEL 2
SCALE: 1 1/2" = 1'-0"

LONGVIEW POLICE DEPARTMENT

518 W. SOUTH ST. LONGVIEW, TEXAS 75601

BRINKLEY SARGENT WIGGINTON ARCHITECTS

Architect: Brinkley Sargent Wigginton Architects (972) 960-9970
Landscape: Kendall Landscape Architecture (214) 739-3226
Structural: L.A. Fuess Partners, Inc (214) 593-1118
MEP: M-E Engineers (214) 741-1589
Civil: KSA Engineers, Inc (903) 236-7700
Technology: M-E Engineers (303) 421-6656

HISTORY

#	DATE	DESCRIPTION

SECTION DETAILS

21719
08/19/2020

A524

BID ISSUE

8/19/2020 3:20:42 PM

D:\Revit Local\LPD_CENTRAL_A19_Sarcherner_08-19-2020.rvt

© 2020 Brinkley Sargent Wiginton Architects, Inc.

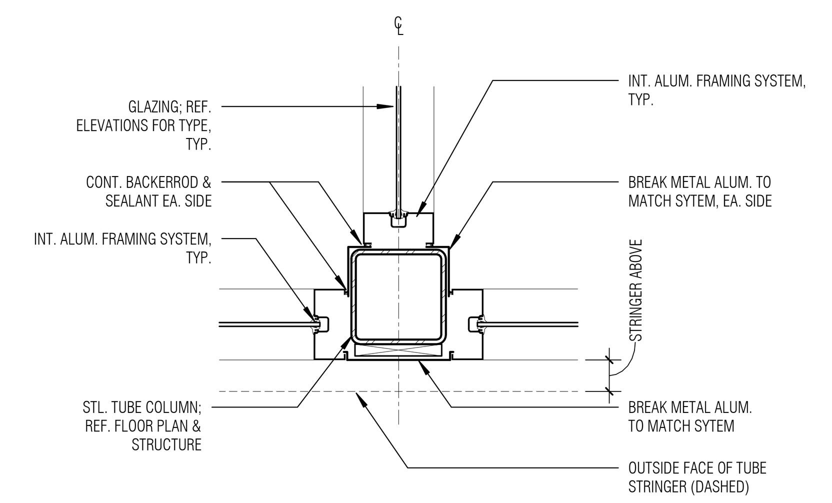

1 PLAN DETAIL - 3-WAY INT. ALUM SF JAMB @ COL.
SCALE: 1 1/2" = 1'-0"

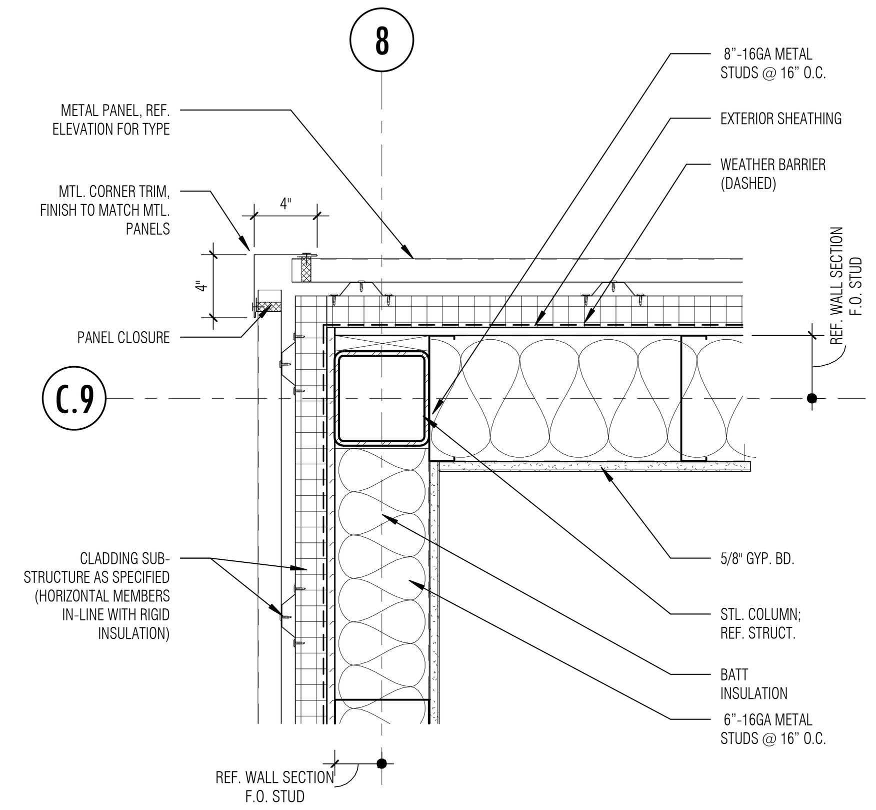

2 OUTSIDE CORNER - HORIZONTAL MTL PANEL
SCALE: 1 1/2" = 1'-0"

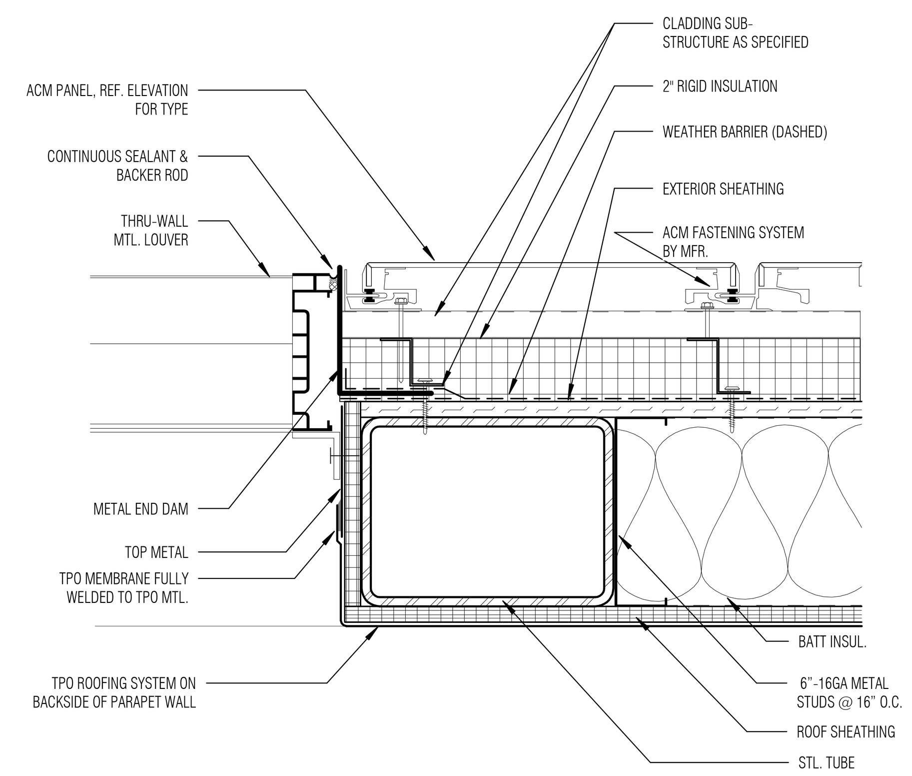

3 JAMB - FLUSH @ LOUVER/ACM/STUD
SCALE: 3" = 1'-0"

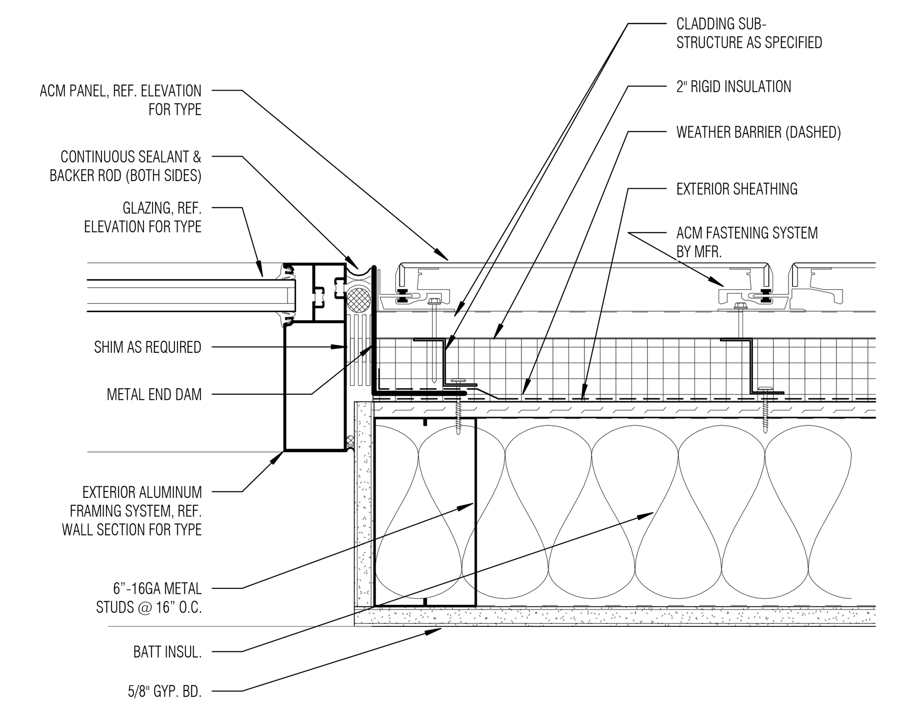

4 JAMB - FLUSH @ STOREFRONT/ACM/STUD
SCALE: 3" = 1'-0"

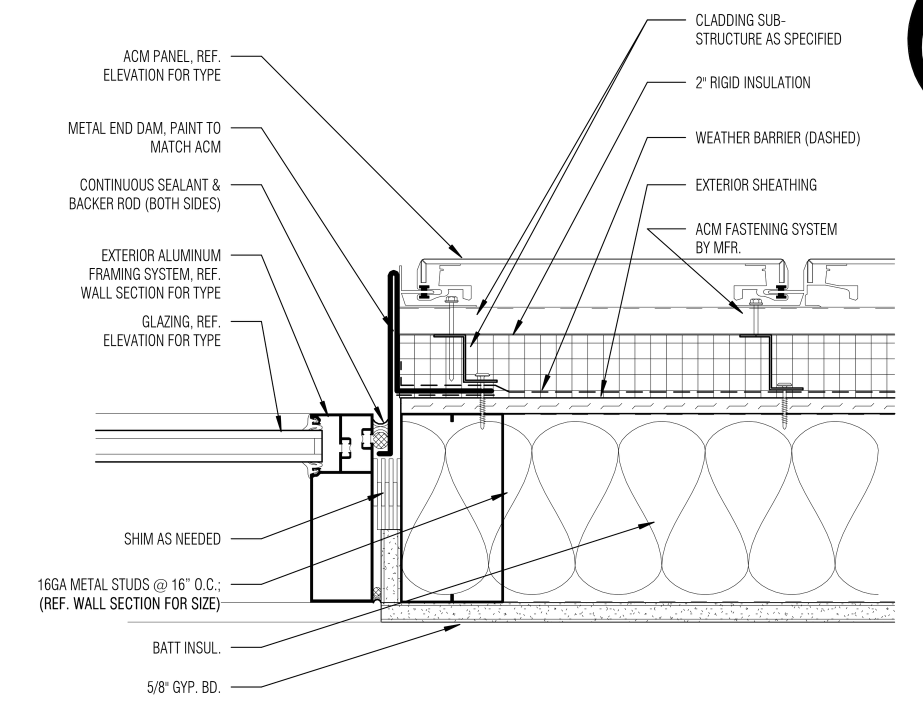

5 JAMB - RECESSED @ STOREFRONT/ACM/STUD
SCALE: 3" = 1'-0"

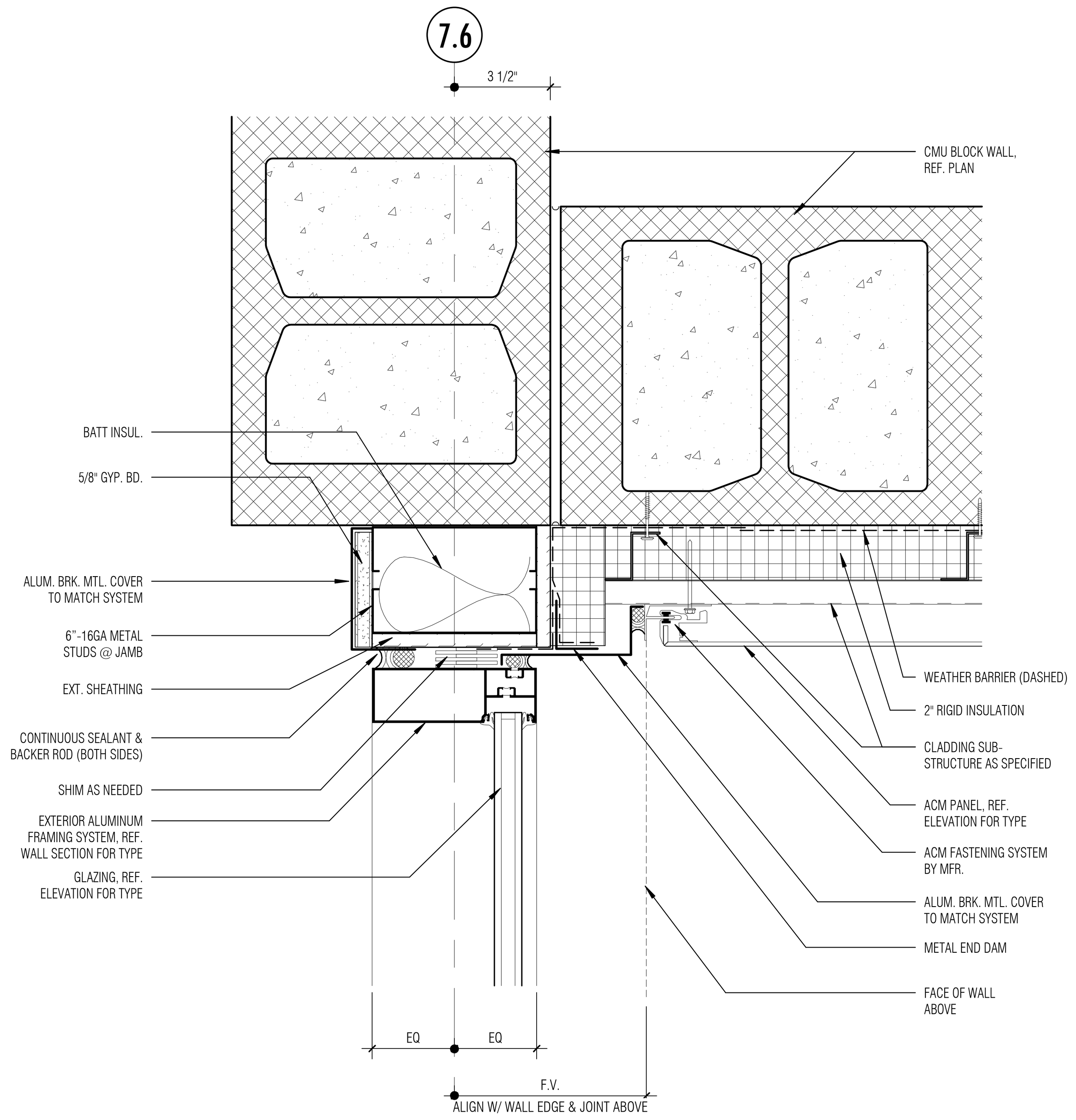

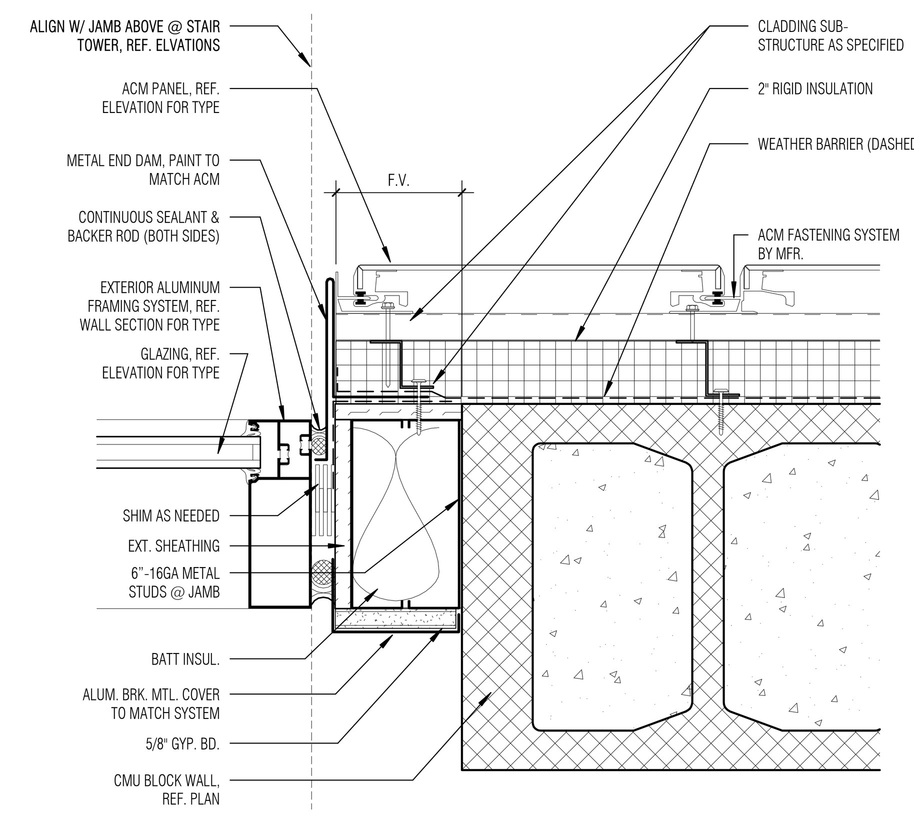

8 JAMB - RECESSED @ STFRNT/ACM/STUD/CMU
SCALE: 3" = 1'-0"

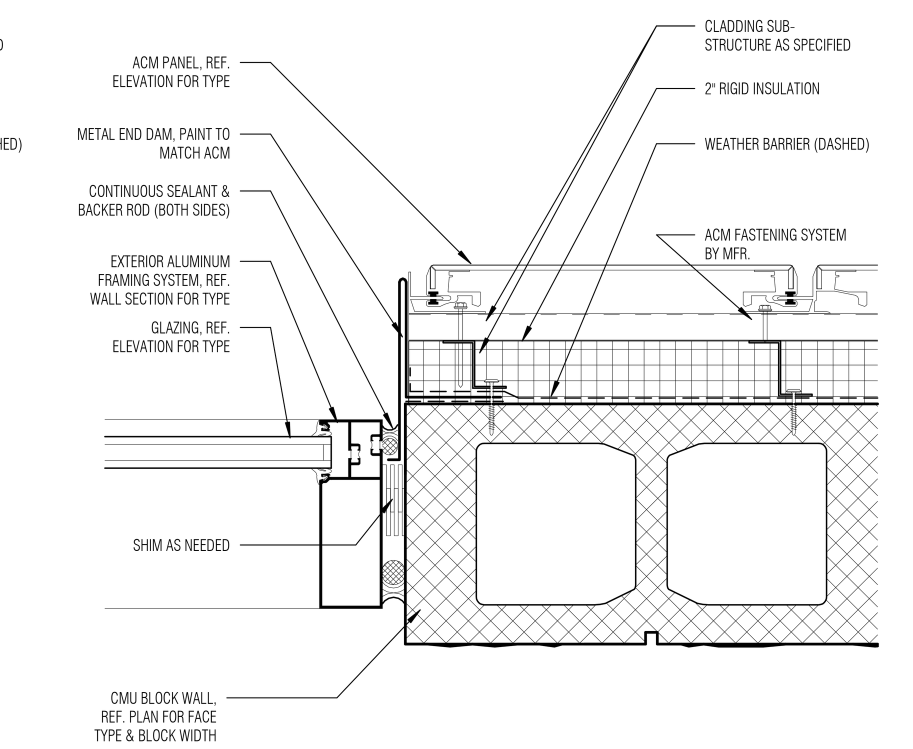

9 JAMB - RECESSED @ STOREFRONT/ACM/CMU
SCALE: 3" = 1'-0"

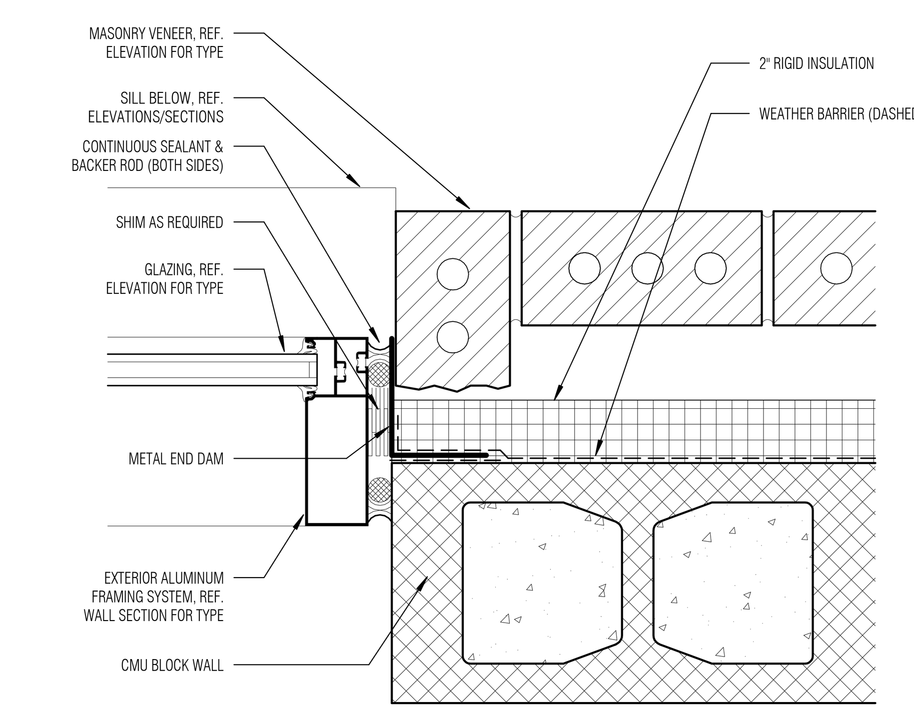

10 JAMB @ STOREFRONT/MASONRY/CMU
SCALE: 3" = 1'-0"

11 JAMB - RECESSED @ STFRNT/ACM/CMU CORNER
SCALE: 3" = 1'-0"

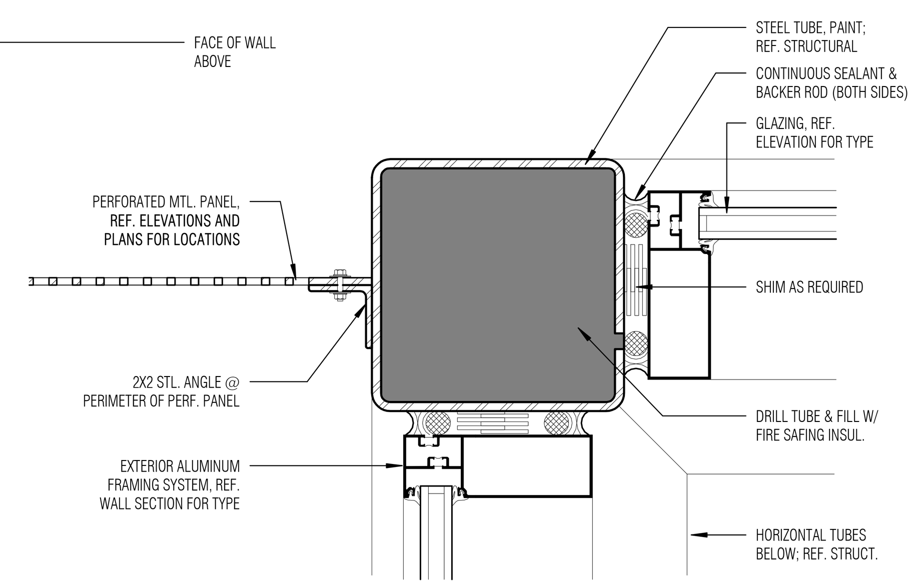

12 JAMB @ CORNER STFRNT/TUBE/STFRNT
SCALE: 3" = 1'-0"

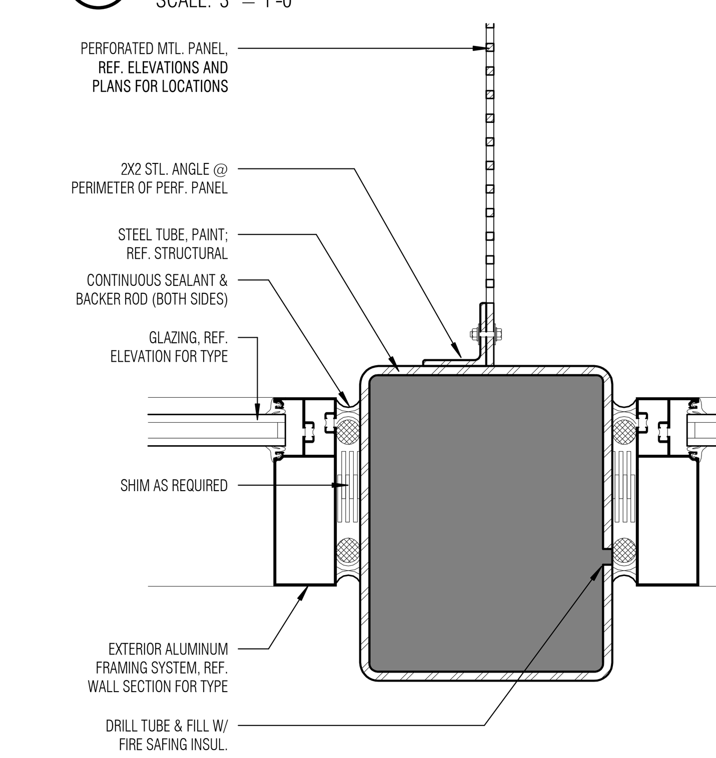

13 JAMB @ STOREFRONT/TUBE/STOREFRONT
SCALE: 3" = 1'-0"

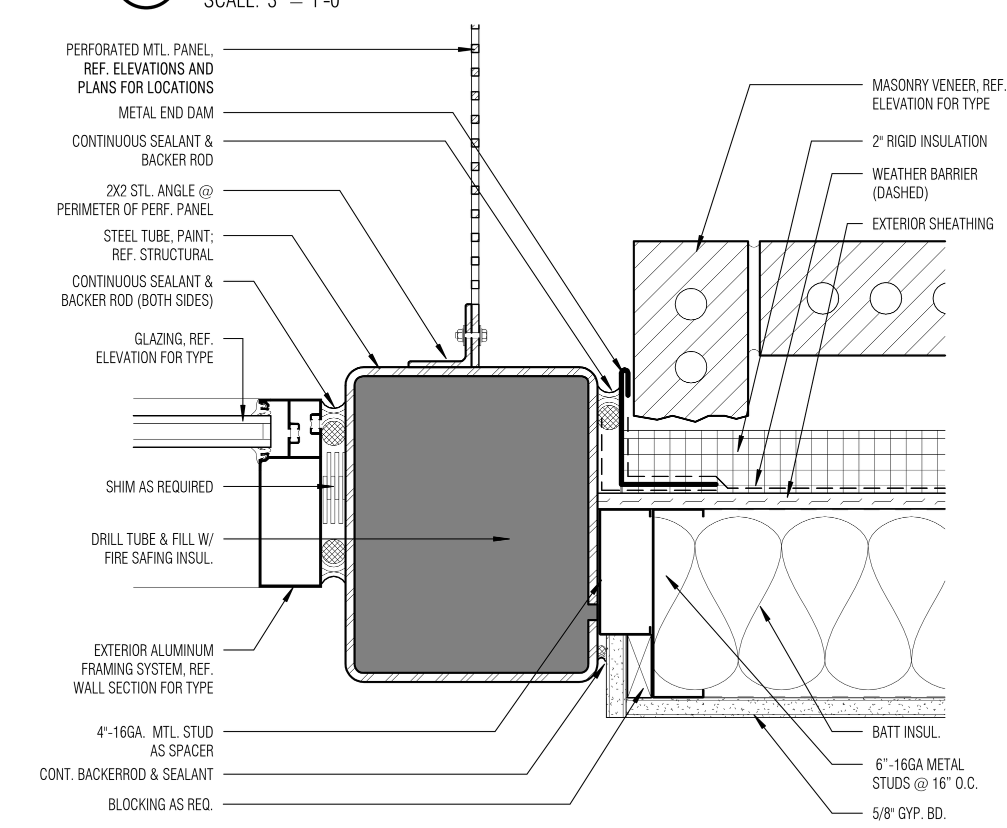

14 JAMB @ STOREFRONT/TUBE/MASONRY/STUD
SCALE: 3" = 1'-0"

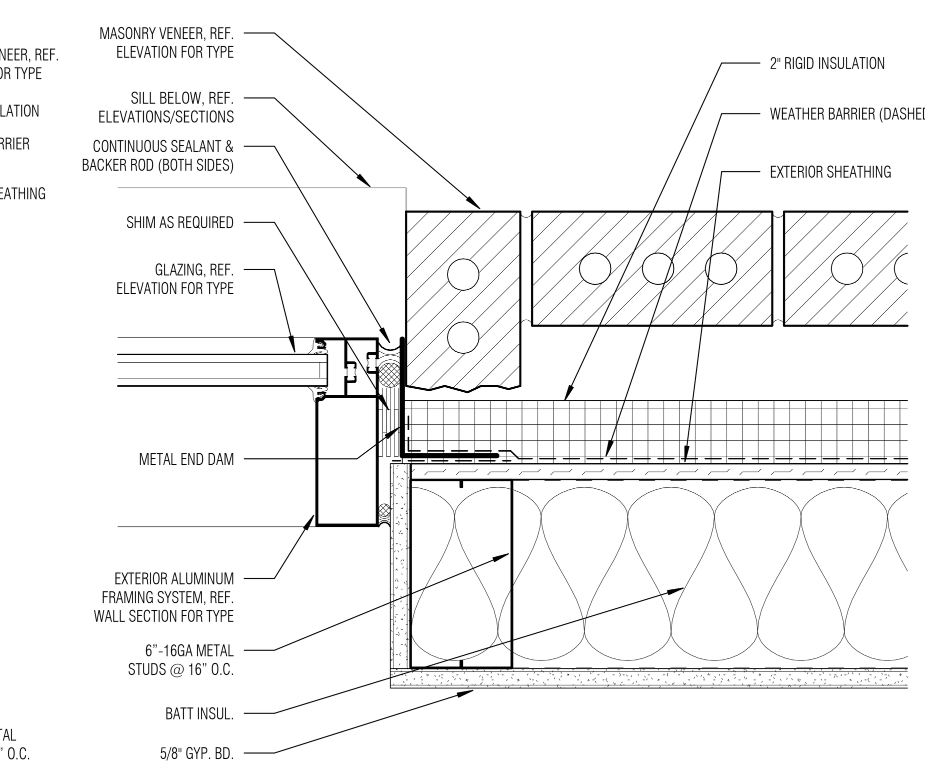

15 JAMB @ STOREFRONT/MASONRY/STUD
SCALE: 3" = 1'-0"

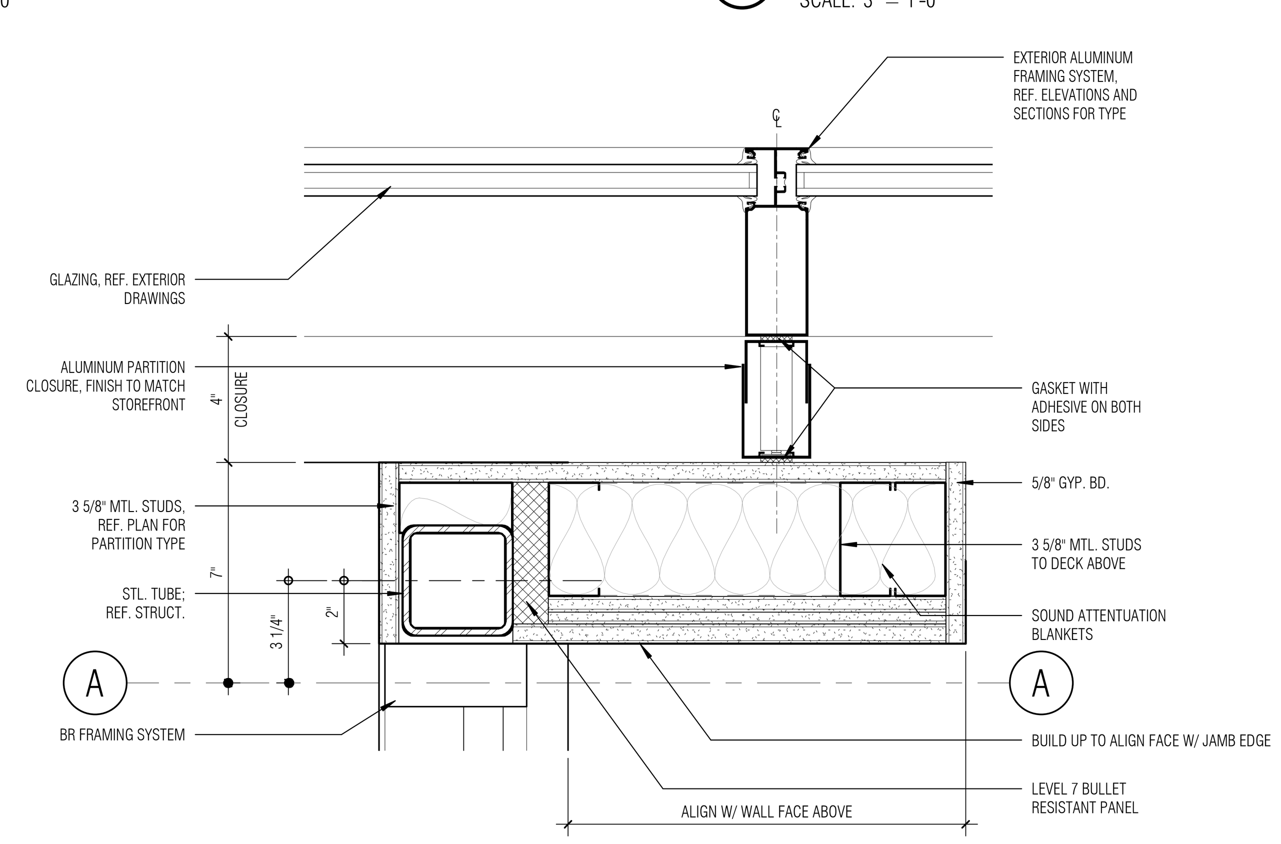

16 PD 1103 STL AT BR HMTL. FRAME
SCALE: 3" = 1'-0"

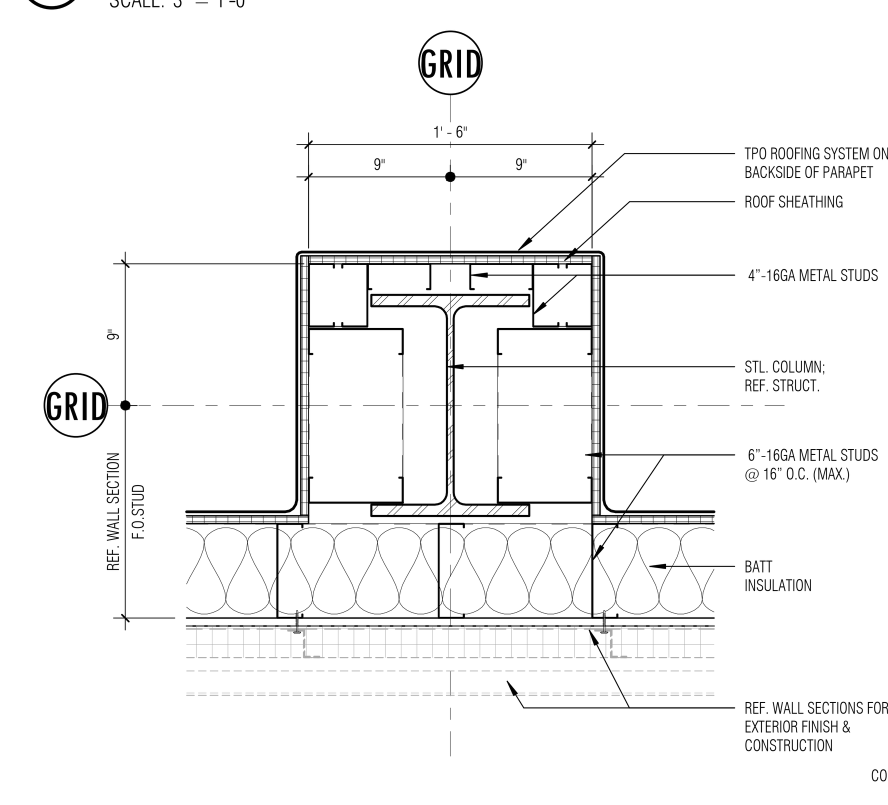

18 MECH. WELL - COLUMN WRAP DETAIL
SCALE: 1 1/2" = 1'-0"

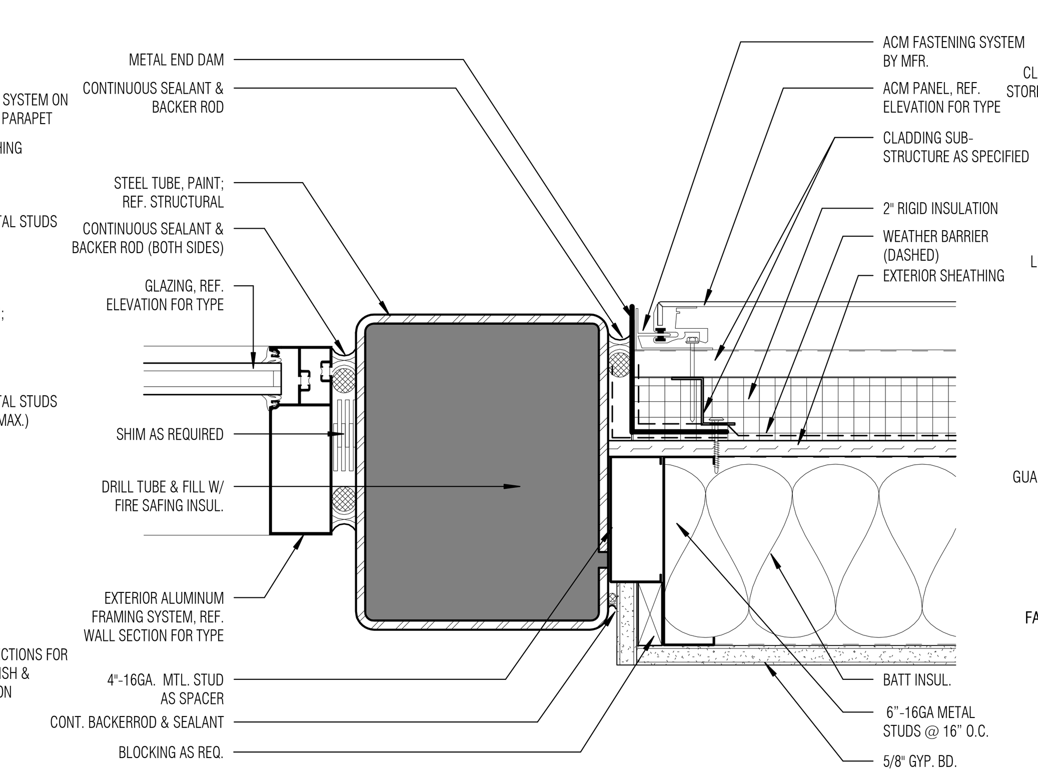

19 JAMB @ STOREFRONT/TUBE/ACM/STUD
SCALE: 3" = 1'-0"

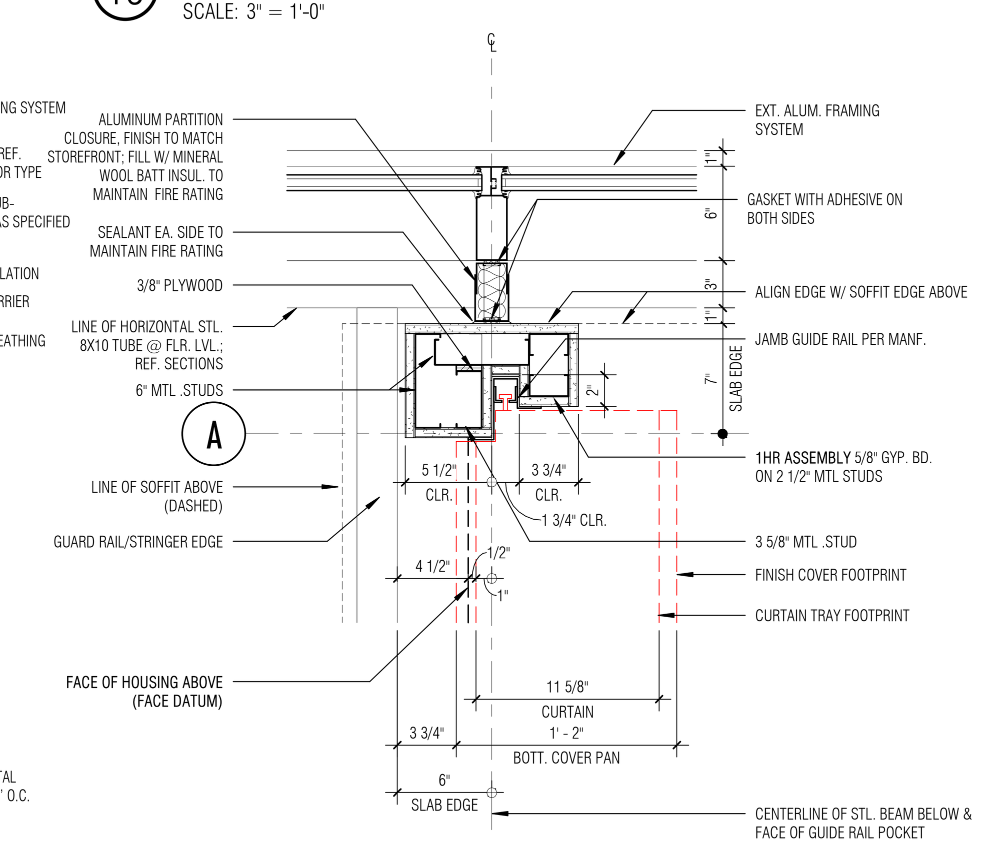

20 PLAN DETAIL - FIRE CURTAIN JAMB-MULL. CLOSURE
SCALE: 1 1/2" = 1'-0"

Architect: Brinkley Sargent Wiginton Architects (972) 960-9970
Landscape: Kendall Landscape Architecture (214) 739-3226
Structural: L.A. Fuess Partners, Inc (214) 593-1118
MEP: M-E Engineers (214) 741-1589
Civil: KSA Engineers, Inc (903) 236-7700
Technology: M-E Engineers (303) 421-6656

BRINKLEY SARGENT WIGINTON ARCHITECTS

LONGVIEW POLICE DEPARTMENT

518 W. SOUTH ST. LONGVIEW, TEXAS 75601

HISTORY		
#	DATE	DESCRIPTION

REGISTERED ARCHITECT HAROLD E. SARGENT 9941 STATE OF TEXAS 08/19/2020

PLAN DETAILS

21719
08/19/2020
A601

BID ISSUE

8/18/2020 3:21:11 PM
D:\Revit Locals\LPD_CENTRAL_A19_bcocherer_08-18-2020.rvt

© 2020 Brinkley Sargent Wigginton Architects, Inc.

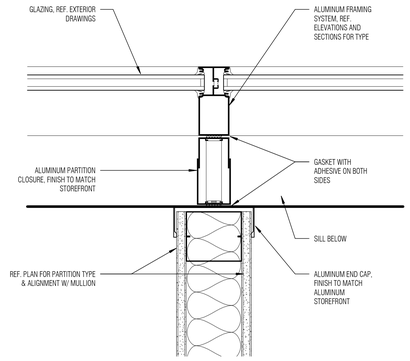

1 PD_AFSSF_PARTITION @ MULLION
SCALE: 3" = 1'-0"

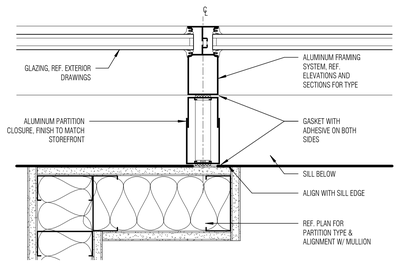

2 PD_AFSSF_PARTITION @ JOG TO MULLION
SCALE: 3" = 1'-0"

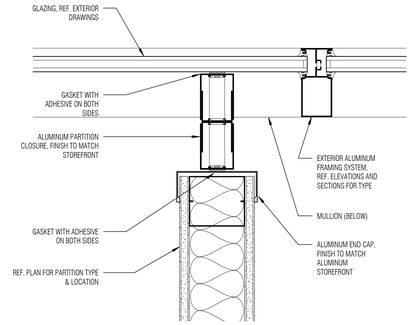

3 PD_AFSSF_PARTITION @ GLAZING NO SILL
SCALE: 3" = 1'-0"

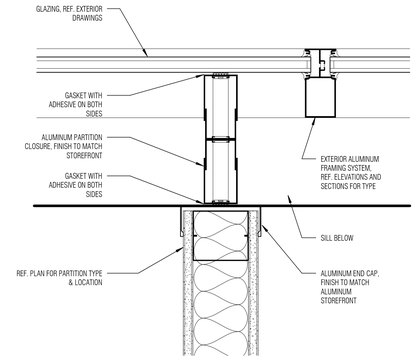

4 PD_AFSSF_PARTITION @ GLAZING
SCALE: 3" = 1'-0"

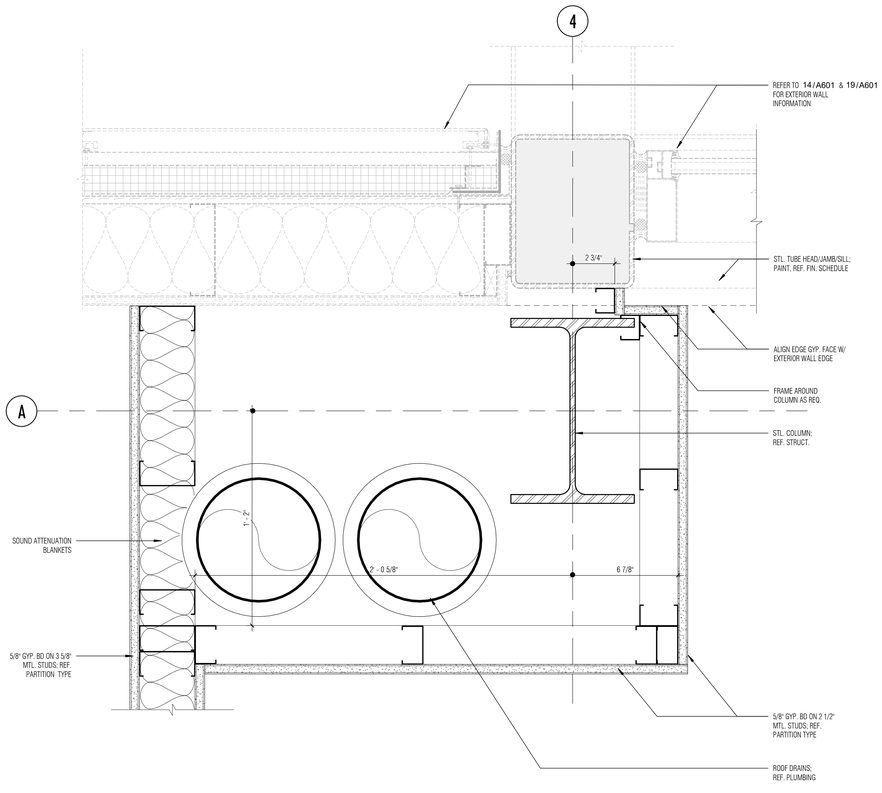

5 LEVEL 2 - PLUMBING CHASE @ GRID 4/A
SCALE: 3" = 1'-0"

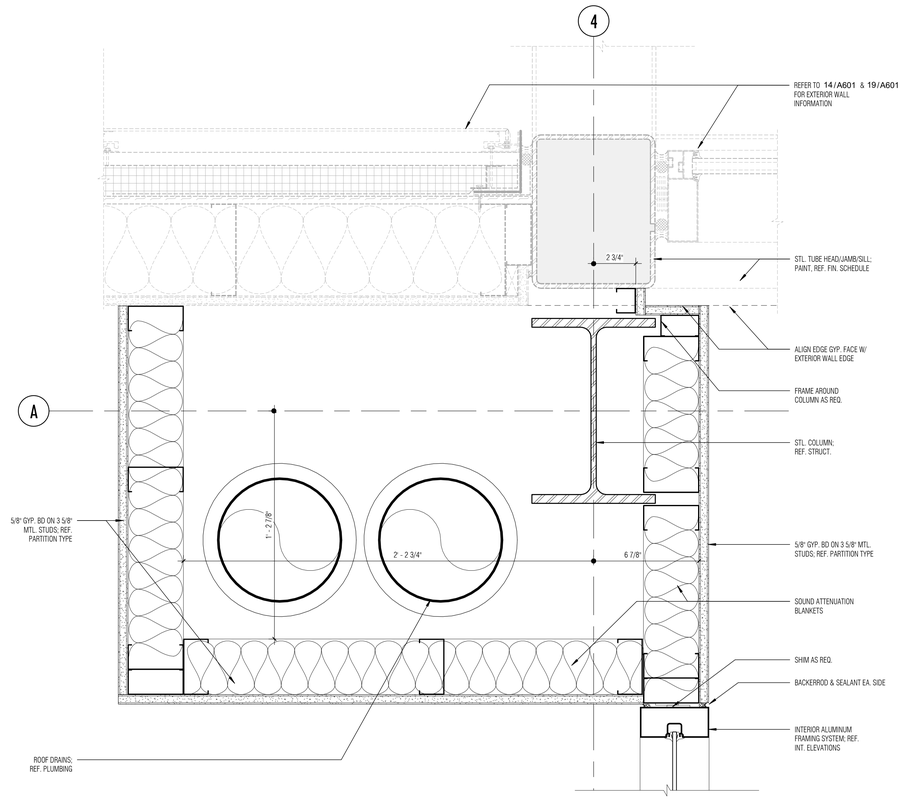

6 LEVEL 3 - PLUMBING CHASE @ GRID 4/A
SCALE: 3" = 1'-0"

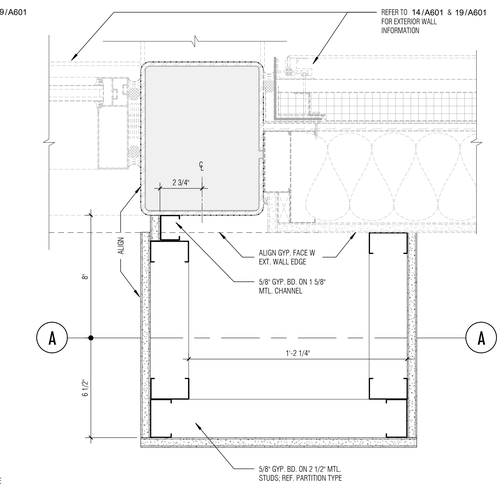

7 LEVEL 2 - FURR OUT AT GRID A_RM 2004
SCALE: 3" = 1'-0"

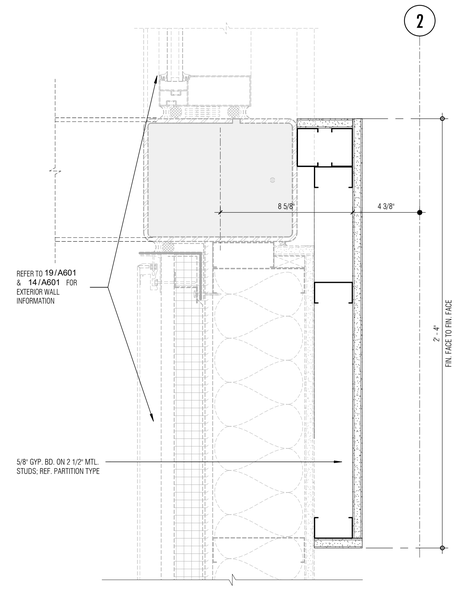

8 LEVEL 2 - FURR OUT AT GRID 2_RM 2004
SCALE: 3" = 1'-0"

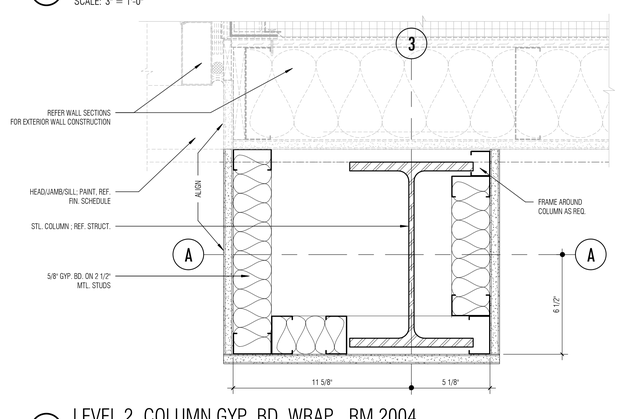

9 LEVEL 2_COLUMN GYP. BD. WRAP_RM 2004
SCALE: 3" = 1'-0"

Architect: Brinkley Sargent Wigginton Architects (972) 960-9970
Landscape: Kendall Landscape Architecture (214) 739-3226
Structural: L.A. Fuess Partners, Inc (214) 593-1118
MEP: M-E Engineers (214) 741-1589
Civil: KSA Engineers, Inc (903) 236-7700
Technology: M-E Engineers (303) 421-6656

BRINKLEY SARGENT WIGGINTON ARCHITECTS

LONGVIEW POLICE DEPARTMENT

518 W. SOUTH ST. LONGVIEW, TEXAS 75601

HISTORY

#	DATE	DESCRIPTION

REGISTERED ARCHITECT BRIAN K. SARGENT 9941 STATE OF TEXAS
08/19/2020

PLAN DETAILS

21719
08/19/2020

A602

BID ISSUE

8/19/2020 3:21:50 PM

D:\Revit Local\LPD_CENTRAL_A19_Bscheuer_08-18-2020.rvt

© 2020 Brinkley Sargent Wigginton Architects, Inc.

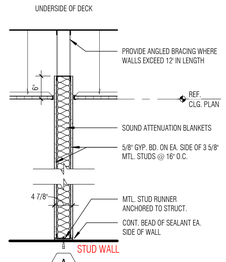

A

A3 SAME AS WALL "A", BUT W/ NO SOUND ATTENUATION BLANKETS

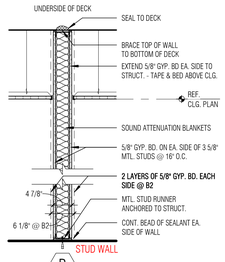

B

B1 1 HR RATED - UL# U419

B2 2 HR RATED - UL# U419

B3 SAME AS WALL "B", BUT W/ IMPACT RESISTANT GYP. BD.

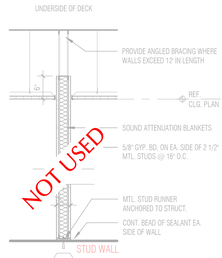

C

C3 SAME AS WALL "C", BUT W/ NO SOUND ATTENUATION BLANKETS

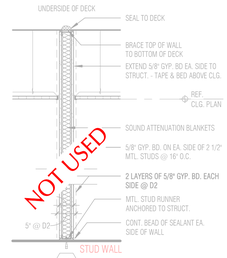

D

D1 1 HR RATED - UL# U419

D2 2 HR RATED - UL# U419

E NOT USED

F NOT USED

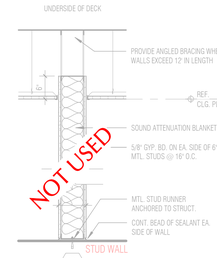

G

G3 SAME AS WALL "G", BUT W/ NO SOUND ATTENUATION BLANKETS

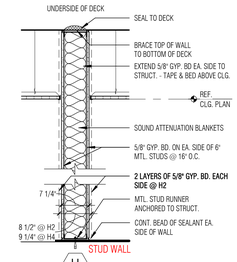

H

H1 1 HR RATED - UL# U419

H2 2 HR RATED - UL# U419

H3 SAME AS WALL "H", BUT WITH 2 LAYERS OF GYP. BD. ON CORRIDOR SIDE

H4 SAME AS WALL "H", BUT WITH 8" STUD

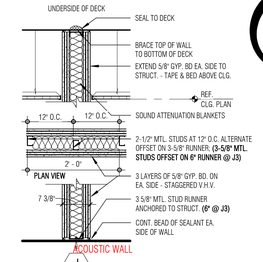

J

J1 1 HR RATED - UL# U419

J3 SAME AS WALL "J", BUT WITH 6" STUD RUNNER & 3 5/8" VERTICAL STAGGERED MTL. STUDS

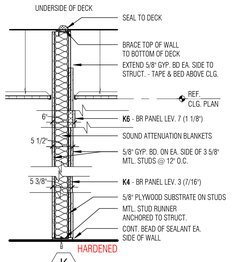

K

K3 SAME AS WALL "K" BUT STOP WALL 6" ABOVE CLG.; WALL TO BE BRACED AS REQ. FOR RIGIDITY

K4 SAME AS WALL "K" BUT REPLACE 5/8" PLYWOOD WITH LEVEL 3 - (7/16") BULLET RESISTANT FIBERGLASS TO 6" ABV. CLG. HT.

K5 SAME AS WALL "K4" BUT W/ 6" MTL. STUDS

K6 SAME AS WALL "K" BUT REPLACE 5/8" PLYWOOD WITH LEVEL 7 - (1-1/8") BULLET RESISTANT FIBERGLASS TO 6" ABV. CLG. HT.

K7 SAME AS WALL "K6" BUT W/ 6" MTL. STUDS

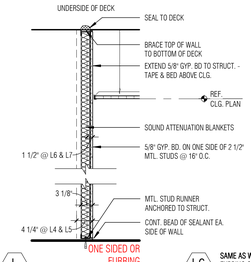

L

L3 SAME AS WALL "L1", BUT GYP. BD. STOPS 6" ABOVE CLG. & NO SOUND ATTENUATION BLANKETS; WALL TO BE BRACED AS REQ. FOR RIGIDITY

L4 SAME AS WALL "L1", BUT WITH 3 5/8" MTL. STUDS

L5 SAME AS WALL "L4", BUT GYP. BD. STOPS 6" ABOVE CLG. & NO SOUND ATTENUATION BLANKETS; WALL TO BE BRACED AS REQ. FOR RIGIDITY

L6 SAME AS WALL "L", BUT WITH 7/8" FURRING CHANNELS & NO SOUND ATTENUATION BLANKETS

L7 SAME AS WALL "L6", BUT GYP. BD. & FURRING STUDS STOP 6" ABOVE CEILING

L8 SAME AS WALL "L", BUT WITH 6" MTL. STUDS

L9 SAME AS WALL "L8", BUT GYP. BD. & FRAMING STUDS STOP 6" ABOVE CEILING

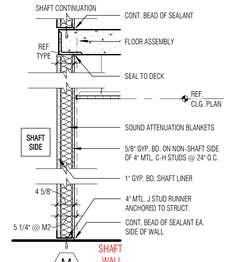

M

M1 1 HR RATED - UL# U415

M2 2 HR RATED - UL# U415

M3 SAME AS WALL "M", BUT W/ NO SOUND ATTENUATION BLANKETS

M4 SAME AS WALL "M", BUT ADD LEVEL 7 - (1-1/8") BULLET RESISTANT FIBERGLASS PANEL AND 1-LAYER 5/8" GB UP TO 9' A.F.F. ON EXTERIOR SIDE OF SHAFT

M5 SAME AS WALL "M4", BUT W/ LEVEL 3 - (7/16") BULLET RESISTANT FIBERGLASS PANEL

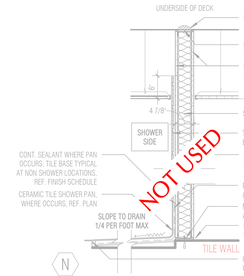

N

N3 SAME AS WALL "N", BUT GYP. BD. & SOUND ATTENUATION BLANKETS STOP 6" ABOVE CLG.; WALL TO BE BRACED AS REQ. FOR RIGIDITY

N4 SAME AS WALL "N3", BUT W/ NO GYP. BD. ON NON-TILE SIDE

N5 SAME AS WALL "N", BUT W/ NO GYP. BD. ON NON-TILE SIDE

N6 SAME AS WALL "N3", BUT W/ NO SOUND ATTENUATION BLANKETS

N7 SAME AS WALL "N3", BUT WITH 6" STUDS

N8 SAME AS WALL "N3", BUT WITH TILE BACKER BOARD AND TILE ON BOTH SIDES & NO SOUND ATTENUATION BLANKETS

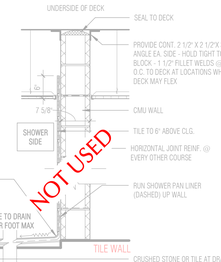

O

O3 SAME AS "O3", BUT STOP WALL ONE COURSE ABOVE CEILING

O4 SAME AS WALL "O", BUT WITH 4" CMU

O5 SAME AS WALL "O4", BUT STOP WALL ONE COURSE ABOVE CEILING

O6 SAME AS WALL "O4", BUT WITH TILE ON BOTH SIDES AND STOP WALL ONE COURSE ABOVE CEILING

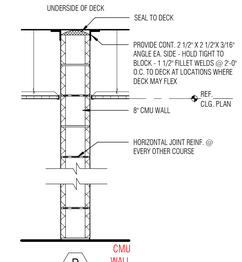

P

P1 1 HR RATED - UL# U907

P2 2 HR RATED - UL# U907

P3 SAME AS WALL "P", BUT STOP WALL ONE COURSE ABOVE CEILING

P4 4 HR RATED - UL# U907

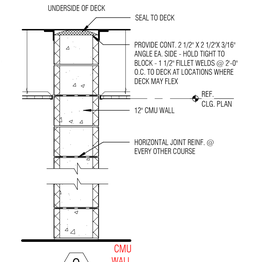

Q

Q1 1 HR RATED - UL# U907

Q2 2 HR RATED - UL# U907

Q3 SAME AS WALL "Q", BUT STOP WALL ONE COURSE ABOVE CEILING

Q4 4 HR RATED - UL# U907

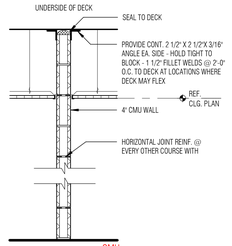

R

R1 1 HR RATED - UL# U907

R2 2 HR RATED - UL# U907

R3 SAME AS WALL "R", BUT STOP WALL ONE COURSE ABOVE CEILING

R4 SAME AS WALL "R", BUT WITH 6" CMU

R5 SAME AS WALL "R3", BUT WITH 6" CMU

R6 SAME AS WALL "R1", BUT WITH 6" CMU

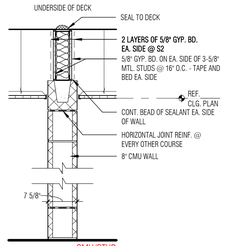

S

S1 1 HR RATED - U.L.# U419 & U907

S2 2 HR RATED - U.L.# U419 & U907

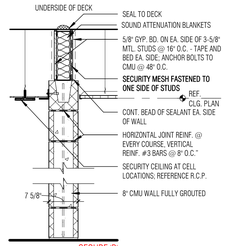

T

T1 1 HR RATED - U.L.# U419 & U907

T2 2 HR RATED - U.L.# U419 & U907; 2 LAYERS OF 5/8" GYP. BD. EA. SIDE @ T2

T3 SAME AS WALL "T", BUT NO STUD WALL ABOVE CEILING

T4 SAME AS WALL "T", BUT NO STUD WALL ABOVE CEILING & CONTINUE CMU WALL TO DECK. BRACE TO DECK AS SHOWN IN TYPE 'V'

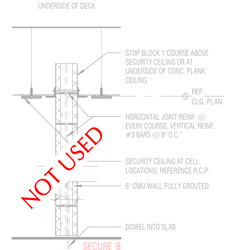

U

U3 SAME AS WALL "U", BUT WITH 8" CMU

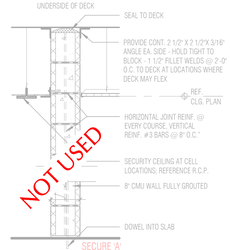

V

V1 1 HR RATED - U.L.# U905

V2 2 HR RATED - U.L.# U905

V3 SAME AS WALL "V", BUT WITH 12" CMU

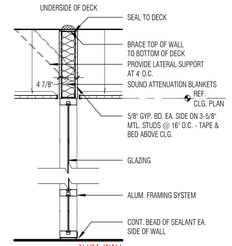

W

REF INT. ELEVS. FOR MULLION COUNT, SPACING, & GLASS TYPE

W3 SAME AS WALL "W" BUT GYP. BD. STOPS 6" ABOVE CLG. & NO SOUND ATTENUATION BLANKETS; WALL TO BE BRACED AS REQ. FOR RIGIDITY

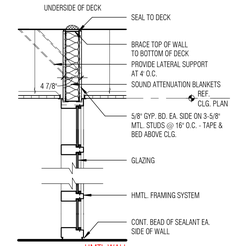

X

REF INT. ELEVS. FOR MULLION COUNT, SPACING, & GLASS TYPE

X3 SAME AS WALL "X" BUT GYP. BD. STOPS 6" ABOVE CLG. & NO SOUND ATTENUATION BLANKETS; WALL TO BE BRACED AS REQ. FOR RIGIDITY

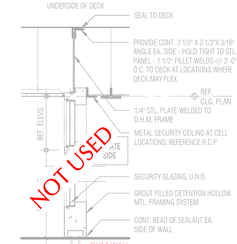

Y

PRIMARY PERIMETER

REF INT. ELEVS. FOR MULLION COUNT, SPACING, & GLASS TYPE

Y3 SECONDARY PERIMETER

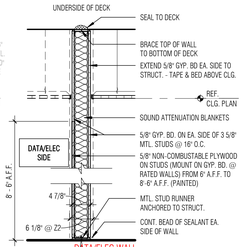

Z

Z1 1 HR RATED - U.L.# U419

Z2 2 HR RATED - U.L.# U419

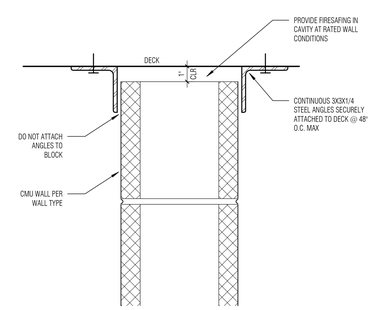

2 07 TYP WALL TO DECK (CMU)

SCALE: 3" = 1'-0"

0" 2" 4"

PARTITION TYPES GENERAL NOTES:

1. REFER TO INTERIOR ELEVATIONS FOR SPECIAL APPLIED FINISHES (TILE, STONE, FINISH CARPENTRY, ETC.)

2. REFER TO STRUCTURAL DRAWINGS FOR ADDITIONAL WALL CONSTRUCTION REQUIREMENTS.

3. ALL CMU WALLS TO RECEIVE CONTINUOUS HORIZONTAL REINFORCEMENT @ 16" O.C. VERTICALLY (MINIMUM) - TYP.

4. SECURITY WALL TYPES SHOWN ARE MINIMUM REQUIREMENTS FOR SECURITY WALLS. STRUCTURAL REQUIREMENTS ON STRUCTURAL DRAWINGS TAKE PRECEDENCE OVER SECURITY REQUIREMENTS - AND ARE IN LIEU OF OR ADDITIVE TO SECURITY REINFORCING.

5. NOT ALL PARTITION TYPES ON THIS SHEET ARE USED.

LONGVIEW POLICE DEPARTMENT

518 W. SOUTH ST. LONGVIEW, TEXAS 75601

Architect: Brinkley Sargent Wigginton Architects (972) 960-9970
Landscape: Kendall Landscape Architecture (214) 739-3226
Structural: L.A. Fuess Partners, Inc (214) 593-1118
MEP: M-E Engineers (214) 741-1589
Civil: KSA Engineers, Inc (903) 236-7700
Technology: M-E Engineers (303) 421-6656

BRINKLEY SARGENT WIGGINTON ARCHITECTS

HISTORY

#	DATE	DESCRIPTION

REGISTERED ARCHITECT 994 STATE OF TEXAS 08/19/2020

PARTITION TYPES

21719

08/19/2020

A701

BID ISSUE

8/19/2020 3:47:04 PM

D:\Revit Local\LPD_CENTRAL_A19_Jacobsen_08-18-2020.rvt

© 2020 Brinkley Sargent Wiginton Architects, Inc.

DOOR SCHEDULE

REV NO.	#	DOOR SIZE WIDTH	DOOR SIZE HEIGHT	TYPE MARK	DOOR MAT.	FRAME MATERIAL	FRAME HEAD	FRAME JAMB	FRAME SILL	FIRE RATING	HW SET NO.	REMARKS
		3' - 0"	7' - 10"	A	HMTL	HMTL				-		
	1001A	6' - 0 1/2"	7' - 9 1/2"	F2	AL/GL	ALUM				-		BALANCED
	1001B	6' - 0"	7' - 10"	G2	AL/GL	ALUM		17/A703	15/A703	-		TIMELOCK
	1002A	3' - 0"	7' - 10"	G	AL/GL	ALUM		17/A703		-		TIMELOCK
	1003A	5' - 8 5/8"	7' - 10"	J2	AL/GL	ALUM				-		
	1003B	5' - 8 5/8"	7' - 10"	J2	AL/GL	ALUM				-		
	1004A	3' - 0"	7' - 10"	J	AL/GL	ALUM				-		
	1006A	3' - 0"	7' - 10"	D	WD/GL	HMTL	2/A703	2/A703		-	6	1, 12 / FROSTED GLASS / BULLET RESISTANT LVL 7 / ACOUSTICAL
	1007A	3' - 0"	7' - 10"	A	WD	HMTL	2/A703	2/A703		-	3	BULLET RESISTANT LVL 7
	1008A	3' - 0"	7' - 10"	D	WD/GL	HMTL	2/A703	2/A703		-	6	FROSTED GLASS / BULLET RESISTANT LVL 7
	1009A	3' - 0"	7' - 10"	A	WD	HMTL	2/A703	2/A703		-	6	
	1011A	3' - 0"	7' - 10"	A	WD	HMTL	2/A703	2/A703		-	6	
	1012A	3' - 0"	7' - 10"	A	WD	HMTL	2/A703	2/A703		-	2	
	1012B	3' - 0"	7' - 10"	A	WD	HMTL	2/A703	2/A703		-	5	
	1013A	3' - 0"	7' - 10"	A	WD	HMTL	2/A703	2/A703		-	3	
	1014A	3' - 0"	7' - 10"	A	WD/GL	HMTL	2/A703	2/A703		-	13	4
	1016A	3' - 0"	7' - 10"	A	WD	HMTL	2/A703	2/A703		-	4	
	1017A	3' - 0"	7' - 10"	D	WD/GL	HMTL	2/A703	2/A703		-	6	FROSTED GLASS / BULLET RESISTANT LVL 7
	1018A	3' - 0"	7' - 10"	D	WD/GL	HMTL	2/A703	2/A703		-	2	FROSTED GLASS / BULLET RESISTANT LVL 7
	1018B	3' - 0"	7' - 10"	A	WD	HMTL	2/A703	2/A703		-	2	RHR
	1019A	3' - 0"	7' - 10"	BF	WD/GL	HMTL	2/A703	2/A703		-	2	
	1021A	3' - 0"	7' - 10"	BF	WD/GL	HMTL	2/A703	2/A703		-	2	
	1101A	3' - 0"	7' - 10"	D	WD/GL	HMTL	2/A703	2/A703		-	6	FROSTED GLASS / BULLET RESISTANT LVL 7
	1101B	3' - 0"	7' - 10"	D	WD/GL	HMTL	2/A703	2,6/A703		-	6	
	1102A	3' - 0"	7' - 10"	D	WD/GL	HMTL	2/A703	2,6/A703		-	6	
	1103A	3' - 0"	7' - 10"	A	WD	HMTL	2/A703	2/A703		-	16	PUSH/PULL
	1104A	3' - 0"	7' - 10"	A	WD	HMTL	2/A703			-	1	
	1105A	3' - 0"	7' - 10"	A	WD	HMTL	2/A703			-	1	
	1106A	3' - 0"	7' - 10"	D	WD/GL	HMTL	2/A703	2,6/A703		-	1	
	1107A	3' - 0"	7' - 10"	D	WD/GL	HMTL	2/A703	6/A703		-	4	
	1108A	3' - 0"	7' - 10"	D	WD/GL	HMTL	2/A703	2/A703		-	1	KEYED LOCK
	1112A	3' - 0"	7' - 10"	D	WD/GL	HMTL	2/A703	2,6/A703		-	4	
	1114A	3' - 0"	7' - 10"	A	WD	HMTL	2/A703	2,6/A703		-	1	2
	1115A	3' - 4"	7' - 10"	A	WD	HMTL	2/A703	6/A703		-	2	9
	1116A	3' - 4"	7' - 10"	A	WD	HMTL	2/A703	2/A703		45	6	
	1117A	3' - 0"	7' - 10"	A	WD	HMTL	2/A703	2/A703		-	3	
	1118A	3' - 0"	7' - 10"	A	WD	HMTL	2/A703	2/A703		-	3	
	1120A	3' - 0"	7' - 10"	A	WD	HMTL	2/A703	2/A703		-	1	2
	1201A	3' - 9 1/2"	7' - 9 1/2"	G	AL/GL	ALUM		13/A704	17/A704	-	6	5
	1201B	3' - 0"	7' - 10"	A	WD	HMTL	10/A703	10/A703		-	6	
	1201C	3' - 0"	7' - 10"	B	WD	HMTL	10/A703	10/A703		-	6	
	1202A	3' - 0"	7' - 10"	A	HMTL	HMTL	10/A703	10/A703		-	20	14GA DOOR AND FRAME
	1202B	3' - 0"	7' - 10"	A	HMTL	HMTL	10/A703	10/A703		-	4	1
	1203A	3' - 0"	7' - 10"	H	HMTL/GL	HMTL	8/A703	7,8/A703		-	22	1/2" TEMPERED GLASS, 14GA DOOR, FRAME, SIDELIGHT
	1204A	3' - 0"	7' - 10"	H	HMTL/GL	HMTL	8/A703	7,8/A703		-	22	1/2" TEMPERED GLASS, 14GA DOOR, FRAME, AND SIDELIGHT
	1205A	3' - 0"	7' - 10"	A	HMTL	HMTL	2/A703	2/A703		-	18	14GA DOOR AND FRAME / BULLET RESISTANT LVL 7
	1206A	3' - 0"	7' - 10"	A	HMTL	HMTL	2/A703	2/A703		-	22	
	1207A	3' - 0"	7' - 10"	A	HMTL	HMTL	2/A703	2/A703		-		
	1208A	3' - 0"	7' - 10"	D	WD/GL	HMTL	2/A703	2/A703		-	6	2 / FROSTED GLASS
	1301A	3' - 0"	7' - 10"	D	WD/GL	HMTL	2/A703	2/A703		-	23	TIMELOCK
	1302A	3' - 0"	7' - 10"	A	WD	HMTL	2/A703	2/A703		-	17	THUMBTURN
	1302B	3' - 0"	7' - 10"	A	WD	HMTL	2/A703	2/A703		-	6	BULLET RESISTANT LVL 7
	1303A	3' - 0"	7' - 10"	D	WD/GL	HMTL	2/A703	2,6/A703		-	6	
	1304A	4' - 0"	7' - 10"	-		HMTL	3/A703	3/A703		-		
	1305A	3' - 0"	7' - 10"	A	WD	HMTL	2/A703	6/A703		-	1	2
	1307A	3' - 6"	7' - 10"	-		HMTL	3/A703	3/A703		-		
	1308A	3' - 0"	7' - 10"	A	HMTL	HMTL	10/A703	10/A703		45	2A	
	1309A	3' - 0"	7' - 10"	A	WD	HMTL	2/A703	2/A703		90	6A	
	1311A	3' - 0"	7' - 10"	A	HMTL	HMTL	10/A703	10/A703		-	3	
	1312A	4' - 8"	7' - 10"	--		HTML	11/A703	11/A703		-		
	1313A	6' - 0"	7' - 10"	A2	HMTL	HMTL	10/A703	10/A703		-	1	8, 10
	1314A	3' - 0"	7' - 10"	--		HTML	11/A703	11/A703		-		
	1316A	4' - 0"	7' - 10"	--		HTML	11/A703	11/A703		-		
	1316B	4' - 0"	7' - 10"	--		HTML	11/A703	11/A703		-		
	1318A	3' - 7"	7' - 9 1/2"	F	AL/GL	ALUM	1/A292	9/A704		-		
	1319A	3' - 7"	7' - 9 1/2"	G	AL/GL	ALUM	1/A292	9/A704		-		
	1320A	3' - 0"	7' - 10"	D	HMTL/GL	HMTL		17/A703	15/A703	-	11	3/8" CLEAR GLASS, 60
	1320B	3' - 0"	7' - 10"	G	AL/GL	ALUM		17/A703	15/A703	-		3/8" CLEAR GLASS, 60
	1401A	4' - 4"	7' - 10"	--		HTML	11/A703	11/A703		-		
	1401B	5' - 0"	7' - 10"	-		HMTL	3/A703	3/A703		-		
	1401C	5' - 0"	7' - 10"	-		HMTL	3/A703	3/A703		-		
	1402A	3' - 0"	7' - 10"	A	WD	HMTL	10/A703	10/A703		-	6	
	1404A	3' - 0"	7' - 10"	A	WD	HMTL	2/A703	2/A703		-	6	
	1404B	3' - 0"	7' - 10"	A	WD	HMTL	10/A703	10/A703		-	18	
	1405A	3' - 0"	7' - 10"	A	WD	HMTL	2/A703	2/A703		-	6	
	1405B	3' - 0"	7' - 10"	B	WD/GL	HMTL	2/A703	2/A703		-	6	2, 7
	1406A	3' - 0"	7' - 10"	A	WD	HMTL	2/A703	2/A703		-	3	
	1407A	3' - 0"	7' - 10"	A	WD	HMTL	2/A703	2/A703		-	1	2
	1409A	4' - 0"	7' - 10"	-		HMTL	3/A703	3/A703		-		
	1414A	3' - 0"	7' - 10"	H	WD/GL	HMTL	10/A703	10/A703		-	18	
	1415A	3' - 0"	7' - 10"	A	HMTL	HMTL	10/A703	10/A703		-	19	
	1416A	3' - 0"	7' - 0"	A	HMTL	HMTL	13/A703	13/A703		-	19	
	1424A	3' - 0"	7' - 0"	A	HMTL	HMTL	13/A703	13/A703		-	13	
	1426A	6' - 4"	7' - 0"	A2	HMTL	HMTL	20/A704	19/A704	17/A704	-		
	1427A	7' - 4"	8' - 0"	K	STL	STL				-		
	1427B	3' - 0"	7' - 0"	A	HMTL	HMTL	13/A703	13/A703		-		
	1427C	7' - 4"	9' - 8"	O	STL	STL	11/A704	1,12/A704	16/A704	-		
	1427D	3' - 4"	7' - 0"	A	HMTL	HMTL	8/A704	1,19//A704	17/A704	-	6	1, 5, 7
	1431A	3' - 4"	7' - 0"	A	HMTL	HMTL	7/A704	1,19//A704	17/A704	-	6	1, 5, 7 / LIGHT SEAL
	1431B	12' - 0"	9' - 8"	O	STL	STL	11/A704	1,6,12/A704	16/A704	-		INSULATED / LIGHT SEAL
	1431C	3' - 6"	7' - 0"	A	HMTL	HMTL	13/A703	13/A703		-	6	1, 5, 7
	1432A	3' - 8"	7' - 10"	A	WD	HMTL	2/A703	2/A703		-	21	
	1433A	3' - 0"	7' - 10"	A	WD	HMTL	2/A703	2/A703		-	6	2, 7
	1434A	3' - 0"	7' - 10"	A	WD	HMTL	2/A703	2/A703		-	13	
	1435A	3' - 0"	7' - 10"	A	WD	HMTL	2/A703	2/A703		-	13	1 / LIGHT SEAL

DOOR SCHEDULE

REV NO.	#	DOOR SIZE WIDTH	DOOR SIZE HEIGHT	TYPE MARK	DOOR MAT.	FRAME MATERIAL	FRAME HEAD	FRAME JAMB	FRAME SILL	FIRE RATING	HW SET NO.	REMARKS
	1436A	3' - 0"	7' - 10"	A	WD	HMTL	10/A703	6,10/A703		-	6	2
	1437A	3' - 0"	7' - 10"	A	WD	HMTL	2/A703	2/A703		-	1	KEYED LOCK
	1438A	3' - 0"	7' - 10"	A	WD	HMTL	2/A703	2/A703		-	1	
	1439A	3' - 0"	7' - 10"	A	WD	HMTL	2/A703	2/A703		-	1	7
	1441A	3' - 0"	7' - 10"	A	WD	HMTL	2/A703	2/A703		-	3	
	1442A	3' - 0"	7' - 10"	B	WD/GL	HMTL	10/A703	10/A703		-	23	1, 7
	1442B	3' - 0"	7' - 10"	B	WD/GL	HMTL	2/A703	2/A703		-	1	
	1501A	3' - 8 1/4"	7' - 9 1/2"	G	AL/GL	ALUM		13,18/A704	17/A704	-	6	5
	1501B	3' - 0"	7' - 10"	D	WD/GL	HMTL		6/A703		-	23	
	1501C	3' - 0"	7' - 10"	A	HMTL	HMTL	10/A703	10/A703		-	4	
	1502A	3' - 0"	7' - 0"	A	HMTL	HMTL	20/A704	19/A704	17/A704	-	1	1, 3, 5 / KEYED LOCK
	1503A	3' - 0"	7' - 10"	A	HMTL	HMTL	10/A703	10/A703		-	3	
	1504A	3' - 0"	7' - 10"	A	HMTL	HMTL	10/A703	10/A703		-	1	7
	1505B	3' - 0"	7' - 0"	A	HMTL	HMTL	20/A704	19/A704	17/A704	-	6	1, 5
	1506A	3' - 4"	7' - 0"	A	HMTL	HMTL	13/A703	13/A703		-	1	
	1508A	12' - 0"	10' - 4"	O	STL	STL	11/A704	12/A704	16/A704	-		INSULATED
	1508B	3' - 0"	7' - 0"	A	HMTL	HMTL	13/A703	13/A703		-		
	1509A	3' - 0"	7' - 0"	A	HMTL	HMTL	13/A703	13/A703		-	9	1, 7
	1511A	3' - 0"	7' - 0"	A	HMTL	HMTL	13/A703	13/A703		-	1	
	1512A	3' - 4"	7' - 0"	A	HMTL	HMTL	13/A703	13/A703		-	8	
	1512B	4' - 0"	7' - 0"	A	HMTL	HMTL	20/A704	19/A704	17/A704	-	1	1, 5
	1513A	3' - 4"	7' - 0"	A	HMTL	HMTL	13/A703	13/A703		-	8	
	1513B	4' - 0"	7' - 0"	A	HMTL	HMTL	20/A704	19/A704	17/A704	-	1	1, 5
	1514A	3' - 8"	7' - 0"	A	HMTL	HMTL	20/A704	19/A704	17/A704	-	1	1, 5
	1516A	12' - 0"	11' - 0"	O	STL	STL	11/A704	12/A704	16/A704	-		INSULATED
	1516B	3' - 0"	7' - 0"	A	HMTL	HMTL	13/A703	13/A703		-	24	
	1517A	3' - 0"	7' - 0"	A	HMTL	HMTL	20/A704	19/A704	17/A704	-	6	PEEPHOLE / 15
	1518A	3' - 0"	7' - 0"	A	HMTL	HMTL	13/A703	13/A703		-	6	
	1519A	3' - 0"	7' - 0"	A	HMTL	HMTL	13/A703	13/A703		-	6	
	1519B	3' - 0"	7' - 0"	A	HMTL	HMTL	13/A703	13/A703		-	9	KEYED LOCK
	1521A	6' - 4"	7' - 0"	A2	HMTL	HMTL	20/A704	19/A704	17/A704	-	15	5 / 1 LEAF AT 4'
	1522A	3' - 0"	7' - 0"	A	HMTL	HMTL	20/A704	19/A704	17/A704	-	9	1, 3, 5
	1601A	4' - 0"	7' - 0"	A	HMTL	HMTL	20/A704	19/A704	17/A704	-	24	5
	1603A	3' - 8"	7' - 0"	A	HMTL	HMTL	20/A704	19/A704	17/A704	-	24	5
	1607A	2' - 6"	7' - 0"	A	HMTL	HMTL				-		
	2002A	3' - 0"	7' - 10"	D	WD/GL	HMTL	2/A703	2/A703		-	11	FROSTED GLASS / MANUAL LOCK / CRASH BAR
	2003A	6' - 0"	7' - 10"	-		HMTL	3/A703	3/A703		-		
	2004A	3' - 0"	7' - 10"	D	WD/GL	HMTL	2/A703	2/A703		-	12	FROSTED GLASS / CRASH BAR
	2004B	3' - 0"	7' - 10"	A	WD	HMTL	2/A703	2/A703		-	8	2 / CRASH BAR
	2005A	3' - 0"	7' - 10"	A	WD	HMTL	2/A703	2/A703		-	1	7
	2008A	3' - 0"	7' - 10"	D	WD/GL	HMTL	2/A703	2/A703		-	4	FROSTED GLASS
	2009A	3' - 0"	7' - 10"	D	WD/GL	HMTL	2/A703	2/A703		-	4	FROSTED GLASS
	2011A	3' - 0"	7' - 10"	D	WD/GL	HMTL	2/A703	2/A703		-		FROSTED GLASS
	2012A	3' - 0"	7' - 10"	A	WD	HMTL	2/A703	2/A703		-	2	KEYED LOCK
	2012B	4' - 0"	7' - 10"	-		HMTL	3/A703	3/A703		-		
	2014A	3' - 0"	7' - 10"	A	WD	HMTL	2/A703	2/A703		-	9	
	2016A	3' - 0"	7' - 10"	A	WD	HMTL	2/A703	2/A703		-	1	
	2017A	3' - 0"	7' - 10"	A	WD	HMTL	2/A703	2/A703		-	1	
	2018A	3' - 0"	7' - 10"	A	WD	HMTL	2/A703			-	1	KEYED LOCK
	2019A	3' - 0"	7' - 10"	A	WD	HMTL	2/A703	2,6/A703		-	1	KEYED LOCK
	2021A	3' - 0"	7' - 10"	A	WD	HMTL	2/A703	2/A703		-	6	
	2022A	3' - 4"	7' - 10"	A	WD	HMTL				-	6	2
	2101A	3' - 0"	7' - 10"	-						-	6	
	2102A	3' - 0"	7' - 10"	D	WD/GL	HMTL	2/A703	2,6/A703		-	2	TIMECLOCK
	2102B	3' - 0"	7' - 10"	A	WD	HMTL	2/A703	2/A703		-	6	BULLET RESISTANT LVL 3
	2104A	3' - 0"	7' - 10"	A	WD	HMTL				45	1	KEYED LOCK , HOLD OPEN
	2105A	3' - 0"	7' - 10"	A	WD	HMTL	2/A703	2/A703		-	1	KEYED LOCK
	2106A	3' - 0"	7' - 10"	A	WD	HMTL				-	1	KEYED LOCK
	2107A	3' - 0"	7' - 10"	A	WD	HMTL				-	1	KEYED LOCK
	2108A	3' - 0"	7' - 10"	D	WD/GL	HMTL	2/A703	2,6/A703		-	1	
	2109A	3' - 0"	7' - 10"	A	WD	HMTL	2/A703	2/A703		45	6	
	2111A	3' - 0"	7' - 10"	A	WD	HMTL	2/A703	2/A703		-	1	
	2112A	3' - 0"	7' - 10"	A	WD	HMTL	2/A703	2,6/A703		-	1	KEYED LOCK
	2113A	3' - 0"	7' - 10"	BF	WD/GL	HMTL	2/A703	2/A703		-	4	9
	2113B	3' - 0"	7' - 10"	BF	WD/GL	HMTL	2/A703	2/A703		-	4	9
	2115A	3' - 0"	7' - 10"	BF	WD/GL	HMTL	2/A703	2/A703		-	2	
	2116A	3' - 0"	7' - 10"	A	WD	HMTL	2/A703	2,6/A703		-	1	
	2118A	3' - 0"	7' - 10"	D	WD/GL	HMTL	2/A703	2,6/A703		-	1	
	2121A	3' - 0"	7' - 10"	A	WD	HMTL	2/A703	2/A703		45	25	HOLD OPEN
	2124A	3' - 0"	7' - 10"	A	WD	HMTL	2/A703	2/A703		45	2A	
	2125A	3' - 0"	7' - 10"	A	WD	HMTL	2/A703	2/A703		90	6A	
	2126A	3' - 0"	7' - 10"	A	WD	HMTL	2/A703	2,6/A703		-	1	KEYED LOCK
	2127A	3' - 0"	7' - 10"	A	WD	HMTL	2/A703	2/A703		-	1	KEYED LOCK
	2128A	3' - 0"	7' - 10"	A	WD	HMTL	2/A703	2/A703		-	9	
	2131A	3' - 0"	7' - 10"	B	WD	HMTL	2/A703	2/A703		-	6	
	2132A	3' - 0"	7' - 10"	A	WD	HMTL	2/A703	2/A703		-	9	
	2135A	3' - 0"	7' - 10"	A	WD	HMTL	2/A703			-		
	2136A	3' - 0"	7' - 10"	A	WD	HMTL	2/A703	2,6/A703		-	1A	
	2137A	3' - 0"	7' - 10"	A	WD	HMTL	2/A703	2/A703		-	1A	
	2138A	3' - 0"	7' - 10"	D	WD/GL	HMTL	2/A703			-	4	
	2139A	3' - 0"	7' - 10"	A	WD	HMTL	2/A703	2,6/A703		-	13	2
	2141A	3' - 0"	7' - 10"	A	WD	HMTL	2/A703	2,6/A703		-	1	KEYED LOCK
	2142A	3' - 0"	7' - 10"	A	WD	HMTL	2/A703			-	1	KEYED LOCK
	2143A	3' - 0"	7' - 10"	A	WD	HMTL	2/A703	2/A703		-	6	
	2144A	3' - 0"	7' - 10"	A	WD	HMTL	2/A703	2,6/A703		-	6A	
	2145A	3' - 0"	7' - 10"	A	WD	HMTL	2/A703	2,6/A703		-	1	KEYED LOCK
	2201A	3' - 0"	7' - 10"	B	WD/GL	HMTL	2/A703	2/A703		-	4	45
	2202A	3' - 0"	7' - 10"	-		HMTL	3/A703	3/A703		-		
	2203A	3' - 0"	7' - 10"	A	WD	HMTL	2/A703	2/A703		-	9	1
	2204A	3' - 0"	7' - 10"	A	WD	HMTL	2/A703	2/A703		-	9	1
	2206A	3' - 0"	7' - 10"	B	WD/GL	HMTL	2/A703	2/A703		-	4	
	2207A	3' - 0"	7' - 10"	A	WD	HMTL	2/A703	2/A703		-	4	
	2208A	3' - 0"	7' - 10"	A	WD	HMTL	2/A703	2/A703		-	4	
	2209A	3' - 0"	7' - 10"	BF	WD/GL	HMTL	2/A703	2/A703		-	4	
	2211A	3' - 0"	7' - 10"	A	WD	HMTL	2/A703	2/A703		-	3	
	2213A	3' - 0"	7' - 10"	B	WD/GL	HMTL	2/A703	2/A703		-	4	
	2213B	3' - 0"	7' - 10"	B	WD/GL	HMTL	2/A703	2/A703		-	4	
	2215A	3' - 0"	7' - 10"	D	WD/GL	HMTL	2/A703	2,6/A703		-		
	2217A	2' - 10"	7' - 10"	A	WD	HMTL	2/A703	2/A703		-	3	
	2218A	2' - 10"	7' - 10"	A	WD	HMTL	2/A703	2/A703		-	3	
	2219A	2' - 10"	7' - 10"	A	WD	HMTL	2/A703	2/A703		-	3	

DOOR SCHEDULE

REV NO.	#	DOOR SIZE WIDTH	DOOR SIZE HEIGHT	TYPE MARK	DOOR MAT.	FRAME MATERIAL	FRAME HEAD	FRAME JAMB	FRAME SILL	FIRE RATING	HW SET NO.	REMARKS
	2221A	2' - 10"	7' - 10"	A	WD	HMTL	2/A703	2/A703		-	3	
	2222A	3' - 0"	7' - 10"	A	WD	HMTL	2/A703	2/A703		-	3	
	2223A	2' - 10"	7' - 10"	A	WD	HMTL	2/A703	2/A703		-	3	
	2224A	3' - 0"	7' - 10"	A	WD	HMTL	2/A703	2/A703		-	3	
	2225A	4' - 0"	7' - 10"	-		HMTL	3/A703	3/A703		-		
	2226A	3' - 0"	7' - 10"	A	WD	HMTL	2/A703			-	3	
	2227A	3' - 0"	7' - 10"	A	WD	HMTL	2/A703			-	3	
	2228A	3' - 0"	7' - 10"	A	WD	HMTL	2/A703			-	3	
	2229A	3' - 0"	7' - 10"	A	WD	HMTL	2/A703			-	3	
	2231A	3' - 0"	7' - 10"	B	WD/GL	HMTL	2/A703	2/A703		-	4	
	3002A	3' - 0"	7' - 10"	D	WD/GL	HMTL	2/A703	6/A703		-	2	LATCH ONLY / TIMECLOCK
	3002B	3' - 0"	7' - 10"	A	WD	HMTL	2/A703	2/A703		-	6	
	3004A	3' - 7"	7' - 10"	-		HMTL	3/A703	3/A703		-		
	3005A	3' - 0"	7' - 10"	A	WD	HMTL	2/A703	2/A703		-	1	KEYED LOCK
	3006A	4' - 0"	7' - 10"	-		HMTL	3/A703	3/A703		-		
	3008A	3' - 0"	7' - 10"	B	WD	HMTL	2/A703	2/A703		-	9	
	3009A	3' - 0"	7' - 10"	A	WD	HMTL	2/A703	2/A703		-	1	KEYED LOCK
	3012A	3' - 0"	7' - 10"	A	WD	HMTL	2/A703	2/A703		-	9	2
	3013A	3' - 0"	7' - 10"	A	WD	HMTL	2/A703	2/A703		-	9	
	3014A	3' - 7"	7' - 10"	-		HMTL	3/A703	3/A703		-		
	3014B	3' - 7"	7' - 10"	-		HMTL	3/A703	3/A703		-		
	3015A	3' - 0"	7' - 10"	A	WD	HMTL	2/A703	2/A703		-	3	
	3016A	3' - 0"	7' - 10"	A	WD	HMTL	2/A703	2/A703		-		
	3017A	3' - 0"	7' - 10"	A	WD	HMTL	2/A703	2/A703		-	3	
	3018A	3' - 0"	7' - 10"	D	WD/GL	HMTL	2/A703	2,6/A703		-	9	
	3021A	3' - 0"	7' - 10"	A	WD	HMTL	2/A703	2/A703		-	1A	KEYED LOCK
	3022A	3' - 0"	7' - 10"	B	WD/GL	HMTL	2/A703	2/A703		-	6	
	3023A	3' - 0"	7' - 10"	A	WD	HMTL	2/A703	2,6/A703		-	9A	
	3024A	3' - 0"	7' - 10"	A	WD	HMTL	2/A703	6/A703		-	9A	
	3025A	3' - 0"	7' - 10"	A	WD	HMTL	2/A703	6/A703		-	9A	
	3026A	3' - 0"	7' - 10"	A	WD	HMTL	2/A703			-	1	
	3027A	3' - 0"	7' - 10"	A	WD	HMTL	2/A703			-	9	
	3028A	3' - 0"	7' - 10"	A	WD	HMTL	2/A703	2/A703		-	9	
	3029A	3' - 0"	7' - 10"	A	WD	HMTL	2/A703	2/A703		-	9	
	3031A	3' - 0"	7' - 10"	A	WD	HMTL	2/A703	2/A703		-	6	4
	3032A	3' - 0"	7' - 10"	A	WD	HMTL	2/A703	2/A703		-	1	
	3102A	3' - 0"	7' - 10"	A	WD	HMTL	2/A703	2/A703		-		
	3103A	3' - 0"	7' - 10"	A	WD	HMTL	2/A703	2/A703		-	2	
	3104A	3' - 0"	7' - 10"	A	WD	HMTL	2/A703	2/A703		-		
	3105A	3' - 0"	7' - 10"	A	WD	HMTL	2/A703	2/A703		-		
	3106A	3' - 0"	7' - 10"	A	WD	HMTL	2/A703	2/A703		-		
	3107A	3' - 0"	7' - 10"	A	WD	HMTL	2/A703	2/A703		-	1A	
	3108A	3' - 0"	7' - 10"	A	WD	HMTL	2/A703	2/A703		-	4	
	3109A	3' - 0"	7' - 10"	A	WD	HMTL	2/A703	2/A703		-	4	
	3115A	3' - 0"	7' - 10"	A	WD	HMTL	2/A703	2/A703		45	2A	
	3116A	3' - 0"	7' - 10"	A	WD	HMTL	2/A703	2/A703		90	6A	
	3118A	3' - 0"	7' - 10"	A	WD	HMTL	2/A703	2/A703		-		
	3122A	3' - 8"	7' - 10"	D	HMTL/GL	HMTL	16/A703	17/A703	15/A703	-		3/8" CLEAR GLASS, HOLD OPEN, 60
	3127A	3' - 0"	7' - 10"	B	WD	HMTL	2/A703	2/A703		-	6	
	3128A	3' - 0"	7' - 10"	A	WD	HMTL	2/A703	2/A703		-	1	
	3129A	3' - 0"	7' - 10"	A	WD	HMTL	2/A703	2/A703		-	6	
	3131A	4' - 0"	7' - 10"	-		HMTL	3/A703	3/A703		-		
	3132A	3' - 0"	7' - 10"	A	WD	HMTL	2/A703	2/A703		-	6	
	3133A	3' - 0"	7' - 10"	A	WD	HMTL	2/A703	2/A703		-	9	
	3134A	3' - 0"	7' - 10"	A	WD	HMTL	2/A703	2/A703		-	6	
	3135A	3' - 0"	7' - 10"	A	WD	HMTL	2/A703	2/A703		-	6	
	3136A	3' - 0"	7' - 10"	A	WD	HMTL	2/A703	2/A703		-	9	
	3137A	3' - 0"	7' - 10"	A	WD	HMTL	2/A703	2/A703		-	4	7
	3143A	3' - 0"	7' - 10"	A	WD	HMTL	2/A703	2/A703		-	6	
	3144A	3' - 0"	7' - 10"	A	WD	HMTL	2/A703			-	1	
	3145A	3' - 0"	7' - 10"	A	WD	HMTL	2/A703			-	1	
	3146A	3' - 0"	7' - 10"	A	WD	HMTL	2/A703			-	1	
	3149A	3' - 0"	7' - 10"	A	WD	HMTL	2/A703	2/A703		-	6	
	3152A	3' - 0"	7' - 10"	D	WD/GL	HMTL	2/A703	2/A703		-	6	FROSTED GLASS
	3155A	3' - 0"	7' - 10"	A	WD	HMTL	2/A703	2/A703		-	1	
	3201A	3' - 0"	7' - 10"	A	WD	HMTL	2/A703	2,6/A703		-		
	3202A	3' - 0"	7' - 10"	A	WD	HMTL	2/A703	2/A703		-	9	DEADBOLT
	3203A	3' - 0"	7' - 10"	A	WD	HMTL	2/A703	2/A703		-	9	DEADBOLT
	3204A	3' - 0"	7' - 10"	A	WD	HMTL	2/A703	2/A703		-	1	KEYED LOCK
	3205A	4' - 0"	7' - 10"	-		HMTL	3/A703	3/A703		-		
	3206A	3' - 0"	7' - 10"	A	WD	HMTL	2/A703	2/A703		-	9	
	3207A	3' - 0"	7' - 10"	D	WD/GL	HMTL	2/A703	2,6/A703		-	2	TIMECLOCK
	3207B	3' - 0"	7' - 10"	A	WD	HMTL	2/A703	2/A703		-	6	DOOR RELEASE
	3208A	3' - 0"	7' - 10"	D	WD/GL	HMTL	2/A703	2/A703		-	3	FROSTED GLASS
	3209A	3' - 0"	7' - 10"	D	WD/GL	HMTL	2/A703	2/A703		-	3	FROSTED GLASS
	4001A	3' - 8"	7' - 10"	A	AL	ALUM	5/A704	4/A704		-	2A	4, 3, 5, 9
	4002A	3' - 8"	7' - 10"	A	HMTL	HMTL				45	1	
	ST-02A	3' - 0"	7' - 10"	--		HTML	11/A703	11/A703		-		
	ST-02B	3' - 8"	7' - 10"	D	HMTL/GL	HMTL	16/A703	17/A703	15/A703	-	8	3/8" CLEAR GLASS, 60
	ST-03A	3' - 8"	7' - 0"	A	HMTL	HMTL	15/A704	14/A704	17/A704	-	14	1, 3, 5
	ST-03B	3' - 0"	7' - 0"	A	WD	HMTL				45	8	
	ST-03C	3' - 0"	7' - 10"	A	WD	HMTL				45		

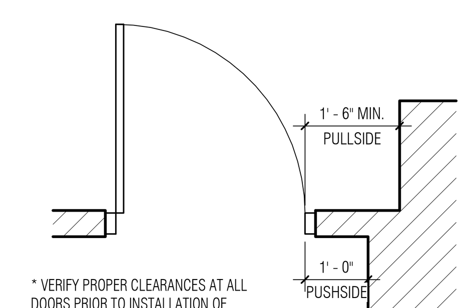

* VERIFY PROPER CLEARANCES AT ALL DOORS PRIOR TO INSTALLATION OF FRAMES. NOTIFY ARCHITECT OF ANY DISCREPANCIES.

TYP. PUSH-PULL CLEARANCE

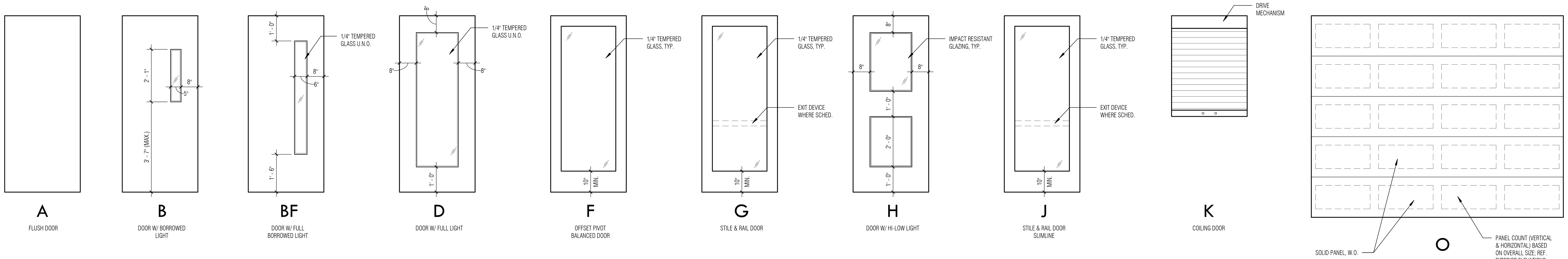

A FLUSH DOOR
B DOOR W/ BORROWED LIGHT
BF DOOR W/ FULL BORROWED LIGHT
D DOOR W/ FULL LIGHT
F OFFSET PIVOT BALANCED DOOR
G STILE & RAIL DOOR
H DOOR W/ HI-LOW LIGHT
J STILE & RAIL DOOR SLIMLINE
K COILING DOOR
O SECTIONAL DOOR (SOLID PANELS)

DOOR TYPES

DOOR SCHEDULE LEGEND

ABBREVIATIONS
ALUM ALUMINUM
AL/GL ALUMINUM & GLASS
DHM DETENTION GRADE HOLLOW METAL
FRP FIBERGLASS REINFORCED PLASTIC
HMTL HOLLOW METAL
HMTL/GL HOLLOW METAL & GLASS
STL STEEL
WD/GL WOOD & GLASS
WD WOOD

REMARKS
CR CARD READER
CK CARD READER W/ KEYPAD
B BIOMETRIC READER
BK BIOMETRIC W/ KEYPAD
MC MECHANICAL KEYPAD
120DG 120 VOLT DETENTION GRADE LOCK
24DG 24 VOLT DETENTION GRADE LOCK
JC JAIL ACCESS CONTROL
PP PUSH PAD AUTO DOOR CONTROL

OVERHEAD DOOR REMARKS (SECTIONAL AND COILING)
ALL OVERHEAD DOORS TO BE POWERED UNLESS NOTED OTHERWISE IN REMARKS AS "MANUAL"

SECTIONAL OVERHEAD DOOR REMARKS
SECTIONAL OVERHEAD DOORS TO HAVE STANDARD LIFT TRACK UNLESS NOTED OTHERWISE

T2 LIFT CLEARANCE TRACK
T3 FULL VERTICAL TRACK

ADDITIONAL REMARKS
1. WEATHERSTRIPPING, DS, T
2. SOUND SEAL
3. DOOR CONTACT
4. W/ DEAD BOLT AND LOCK
5. RAIN DRIP
6. 12" KICK PLATE
7. 36" KICK PLATE
8. FLUSH BOLT
9. HOLD OPEN ON CLOSER
10. ASTRAGAL
11. ELECTRIC MAGNET HOLD OPEN - COORD W/ LOW VOLT. FOR FIRE ALARM RELEASE
12. AUTO DOOR BOTTOM

GENERAL DOOR SCHEDULE NOTE:
NUMERICAL SUFFIX FOLLOWING DOOR DESIGNATION IS EQUAL TO NUMBER OF DOORS IN OPENING.
EXAMPLE: "A2" = (2) TYPE A DOORS

BRINKLEY SARGENT WIGINTON ARCHITECTS
Architect: Brinkley Sargent Wiginton Architects (972) 960-9970
Landscape: Kendall Landscape Architecture (214) 739-3226
Structural: L.A. Fuess Partners, Inc (214) 593-1118
MEP: M-E Engineers (214) 741-1589
Civil: KSA Engineers, Inc (903) 236-7700
Technology: M-E Engineers (303) 421-6656

LONGVIEW POLICE DEPARTMENT

518 W. SOUTH ST. LONGVIEW, TEXAS 75601

HISTORY

#	DATE	DESCRIPTION

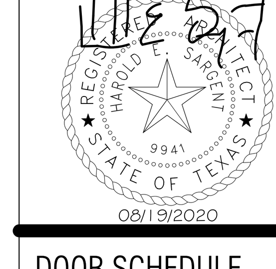

DOOR SCHEDULE AND DOOR TYPES

21719
08/19/2020
A702

BID ISSUE

8/18/2020 4:15:28 PM
D:\Revit Locals\LPD_CENTRAL_A19_bcochener_08-18-2020.rvt

© 2020 Brinkley Sargent Wigginton Architects, Inc.

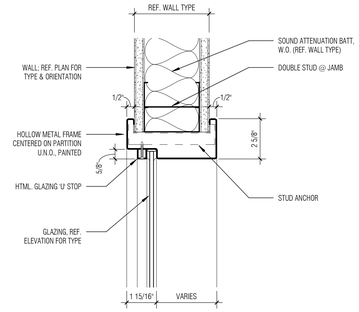

1 DR_HMTL_HD-JB_GLAZED_SNGL RABBET
SCALE: 3" = 1'-0"

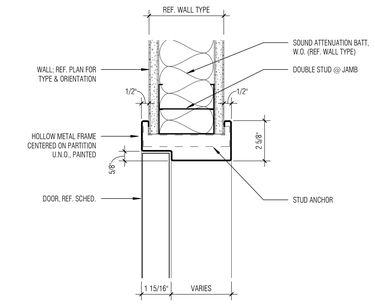

2 DR_MTLS_HMTL_HD-JB SNGL RABBET
SCALE: 3" = 1'-0"

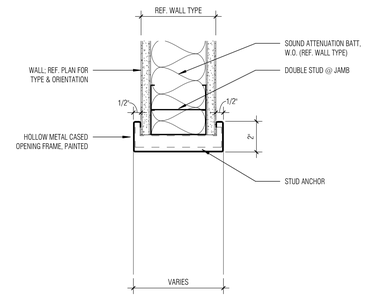

3 DR_MTLS_HMTL_HD-JB CASED
SCALE: 3" = 1'-0"

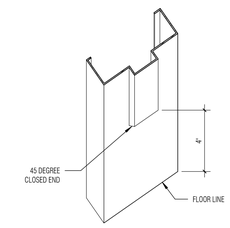

4 DR_HOSPITAL STOP_AXON
SCALE: 3" = 1'-0"

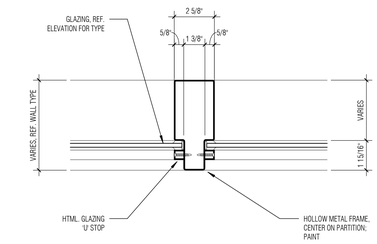

5 DR_HMTL_MULLION_SNGL RABBET
SCALE: 3" = 1'-0"

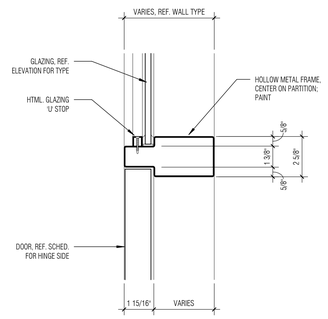

6 DR_HMTL_HD-JB_SIDELITE_SNGL RABBET
SCALE: 3" = 1'-0"

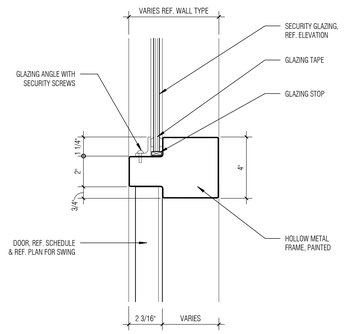

7 DR_HMTL_JB_SIDELITE - LOW SECURITY
SCALE: 3" = 1'-0"

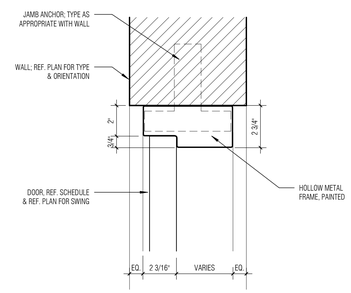

8 DR_CMU_HMTL_HD-JB_LOW SECURITY
SCALE: 3" = 1'-0"

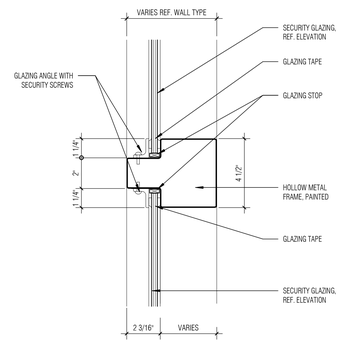

9 DR_HMTL_MULLION - LOW SECURITY
SCALE: 3" = 1'-0"

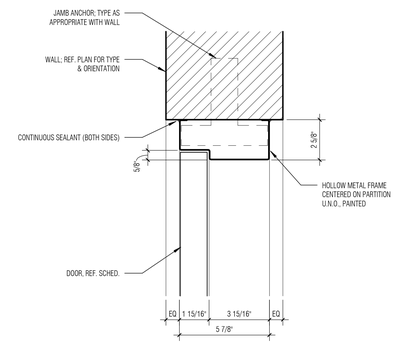

10 DR_CMU_HMTL_HD-JB SNGL RABBET
SCALE: 3" = 1'-0"

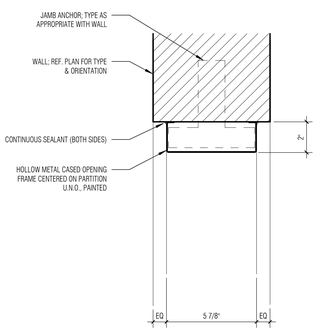

11 DR_CMU_HMTL_HD-JB CASED
SCALE: 3" = 1'-0"

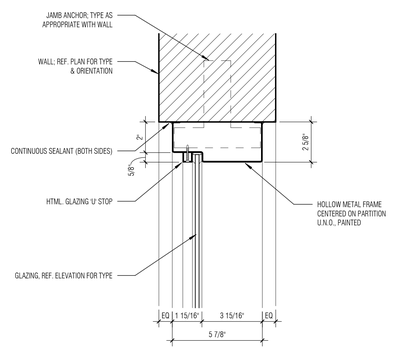

12 DR_CMU_HMTL_HD-JB GLAZED_SNGL RABBET
SCALE: 3" = 1'-0"

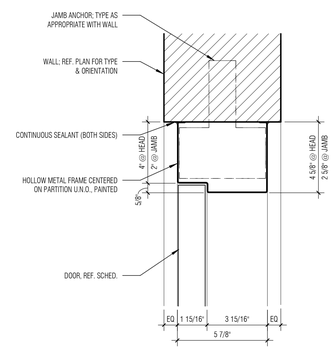

13 DR_CMU_HMTL_HD-JB 4" SNGL RABBET
SCALE: 3" = 1'-0"

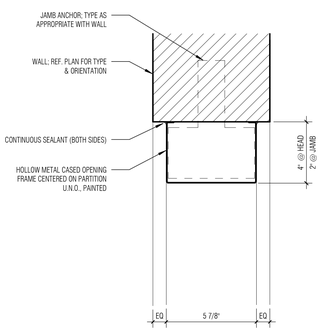

14 DR_CMU_HMTL_HD-JB CASED 4"
SCALE: 3" = 1'-0"

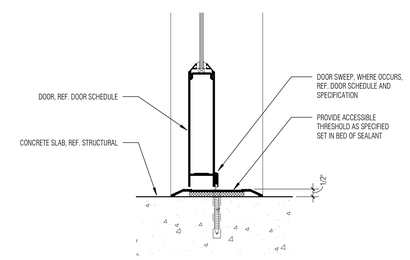

15 DR_AFS_INT-DOOR SILL_TYP
SCALE: 3" = 1'-0"

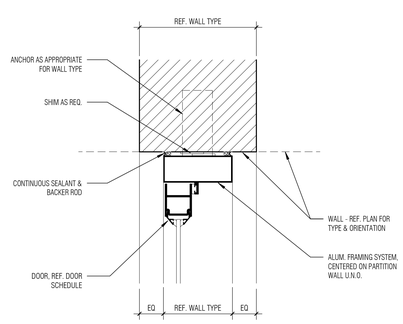

16 DR_AFSSF_INT_DOOR_HD-JB_TYP
SCALE: 3" = 1'-0"

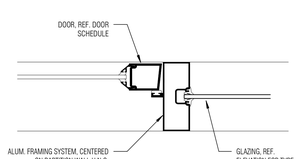

17 DR_AFSSF_INT_DOOR_JB_SIDELITE
SCALE: 3" = 1'-0"

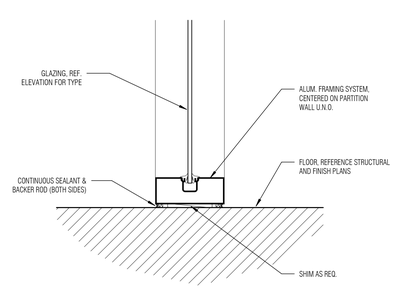

18 DR_AFSSF_INT_SILL_TYP
SCALE: 3" = 1'-0"

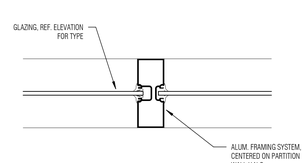

19 DR_AFSSF_INT_MULLION
SCALE: 3" = 1'-0"

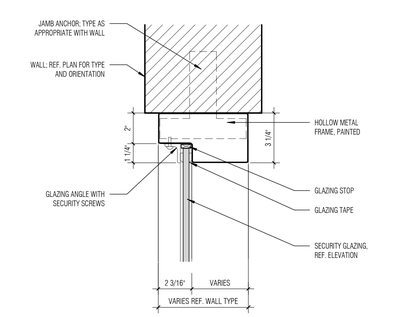

20 DR_CMU_HMTL_HD-JB_GLAZED - LOW SECURITY
SCALE: 3" = 1'-0"

Architect: Brinkley Sargent Wigginton Architects (972) 960-9970
Landscape: Kendall Landscape Architecture (214) 739-3226
Structural: L.A. Fuess Partners, Inc (214) 593-1118
MEP: M-E Engineers (214) 741-1589
Civil: KSA Engineers, Inc (903) 236-7700
Technology: M-E Engineers (303) 421-6656

BRINKLEY SARGENT WIGINTON ARCHITECTS

LONGVIEW POLICE DEPARTMENT

518 W. SOUTH ST. LONGVIEW, TEXAS 75601

HISTORY

#	DATE	DESCRIPTION

REGISTERED ARCHITECT 9941 STATE OF TEXAS
08/19/2020

DOOR DETAILS

21719
08/19/2020

A703

BID ISSUE

8/19/2020 4:16:23 PM

D:\Revit Locals\LPD_CENTRAL_A19_Jacobsen_08-19-2020.rvt

© 2020 Brinkley Sargent Wiginton Architects, Inc.

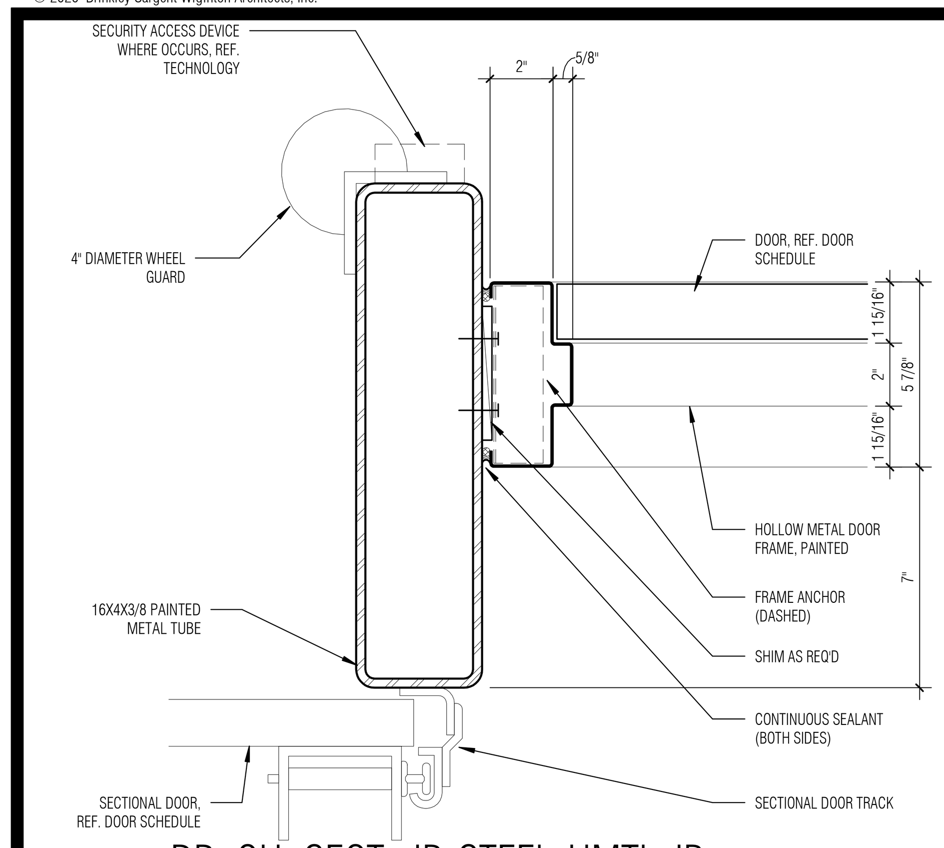

(1) DR OH SECT JB-STEEL-HMTL JB
SCALE: 3" = 1'-0"

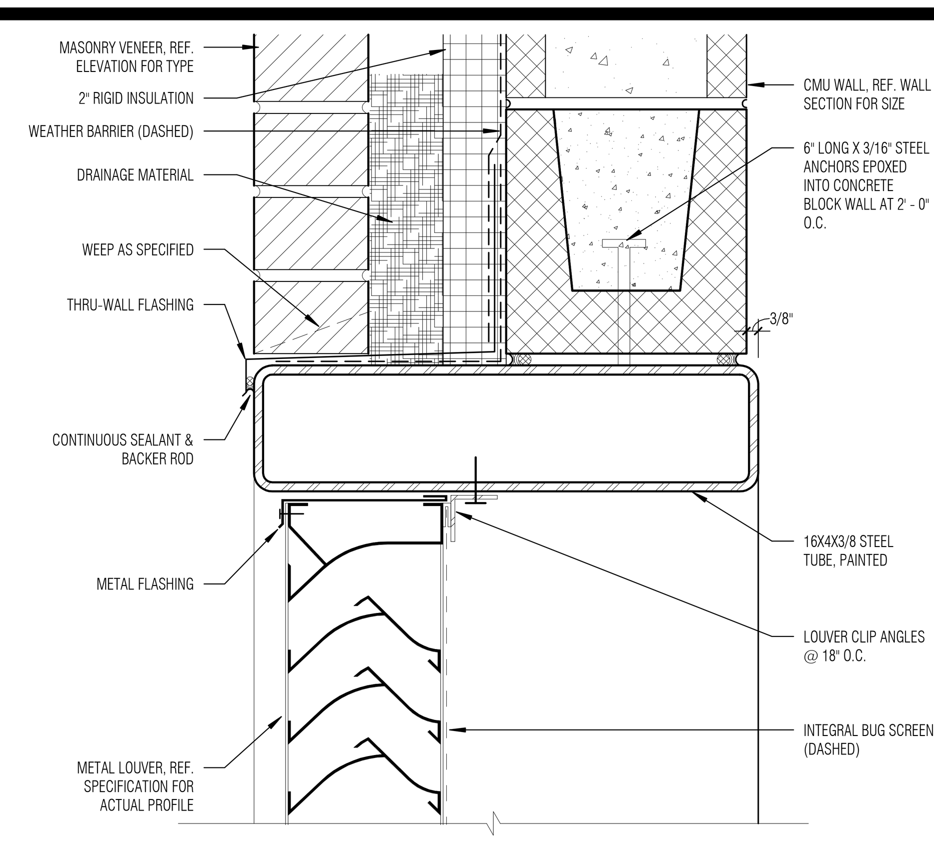

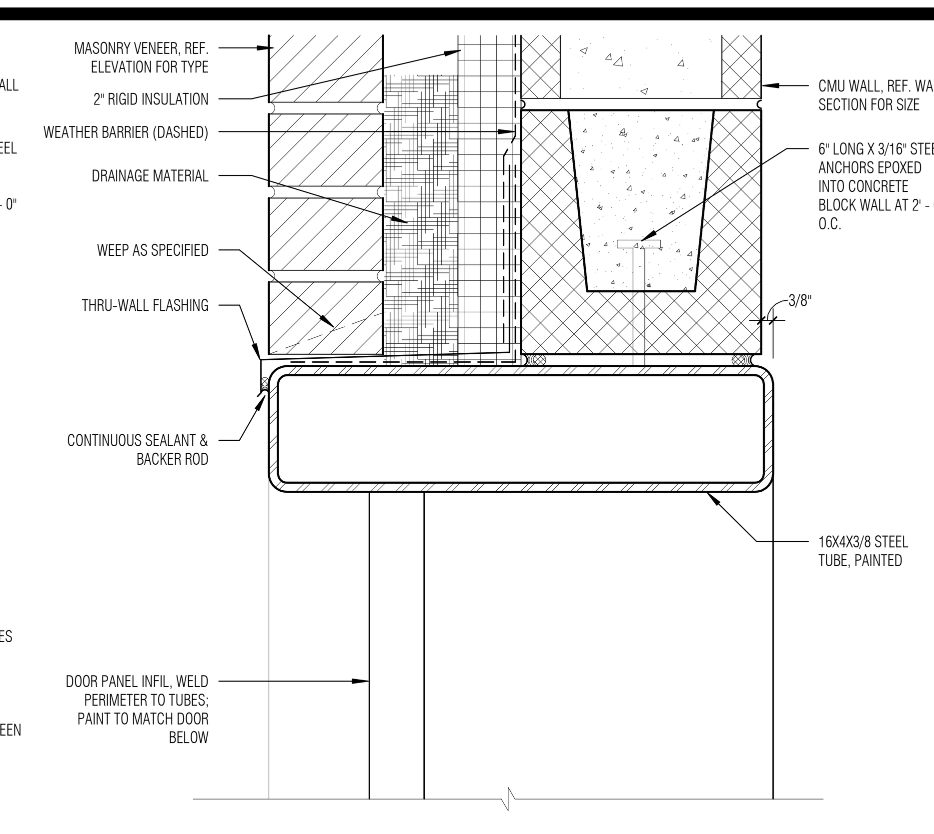

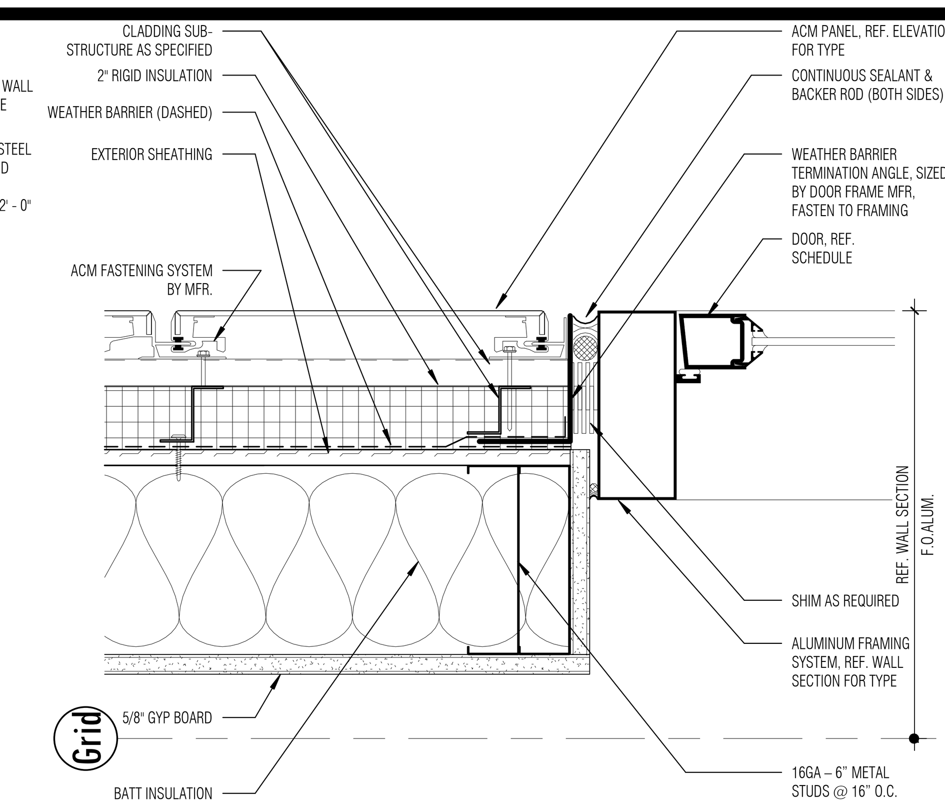

(4) DR MTLS AFSSF-JB ACM-FLUSH
SCALE: 3" = 1'-0"

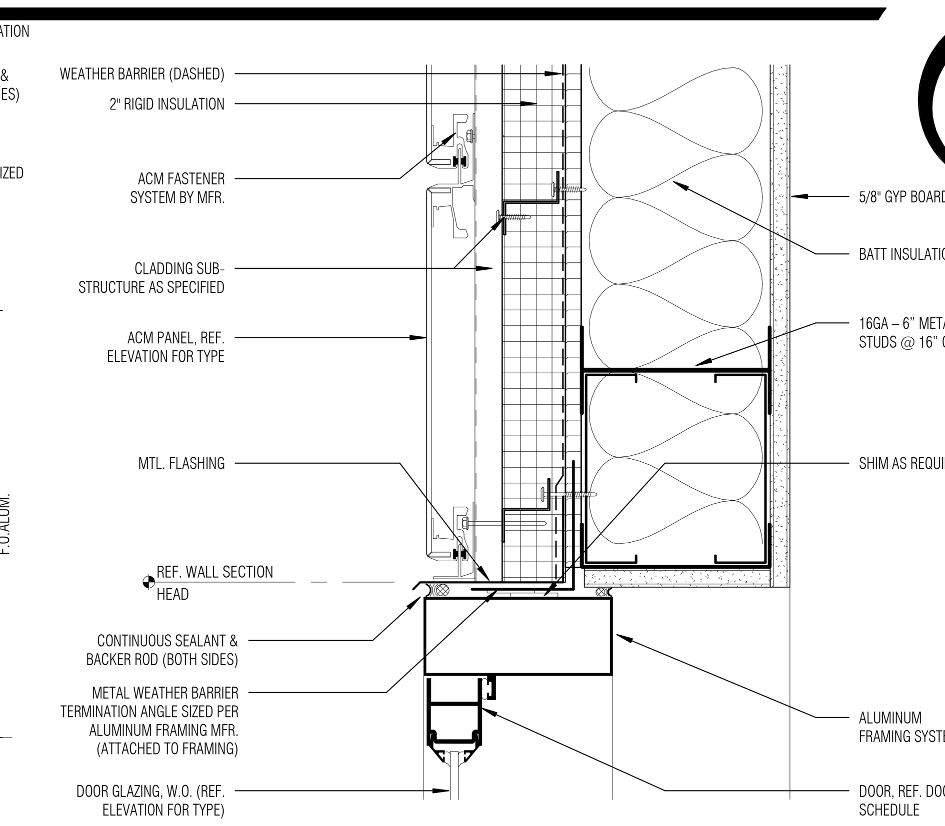

(5) DR MTLS AFSSF-HD ACM-FLUSH
SCALE: 3" = 1'-0"

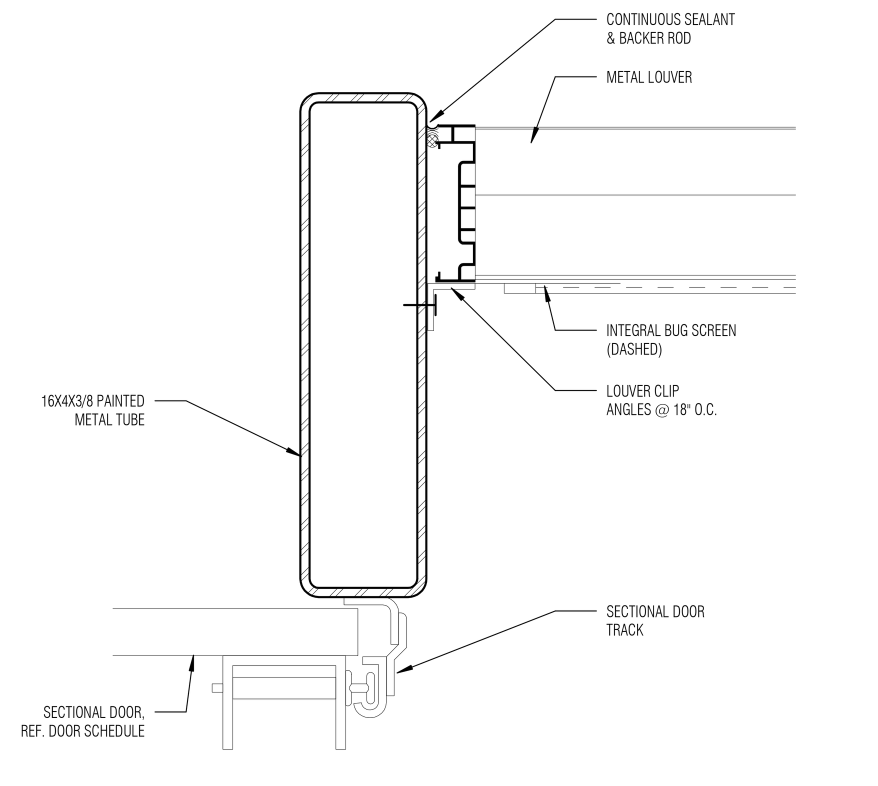

(6) DR LOUVER JB W/ STEEL
SCALE: 3" = 1'-0"

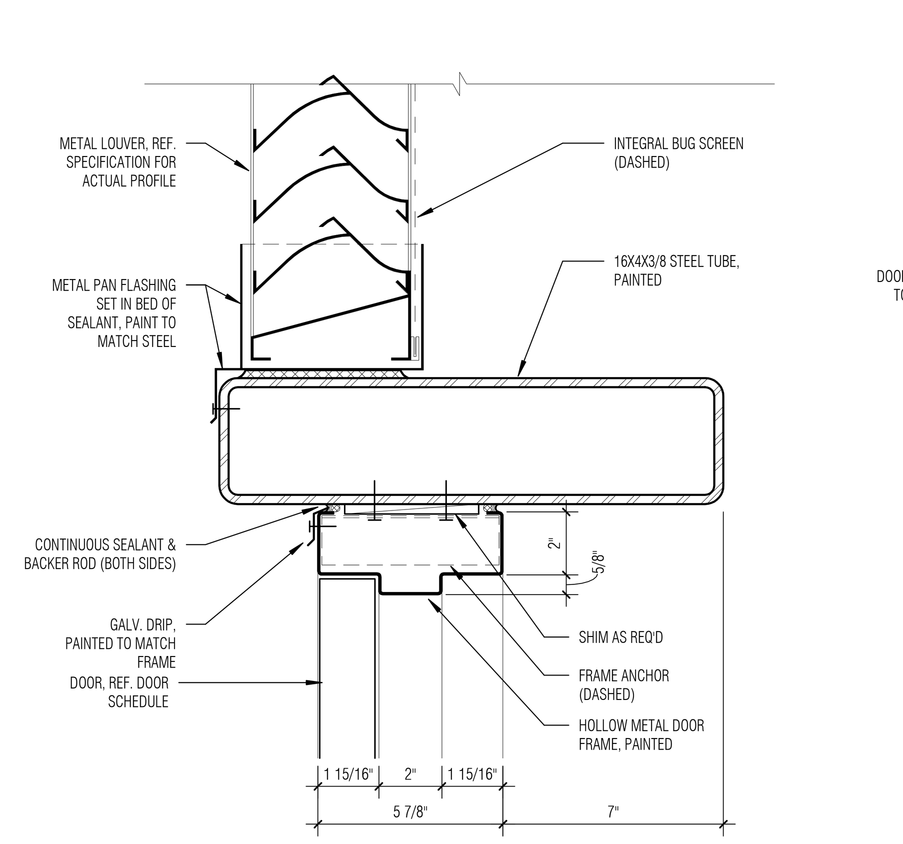

(7) DR LOUVER SILL-STEEL-HMTL DR HD
SCALE: 3" = 1'-0"

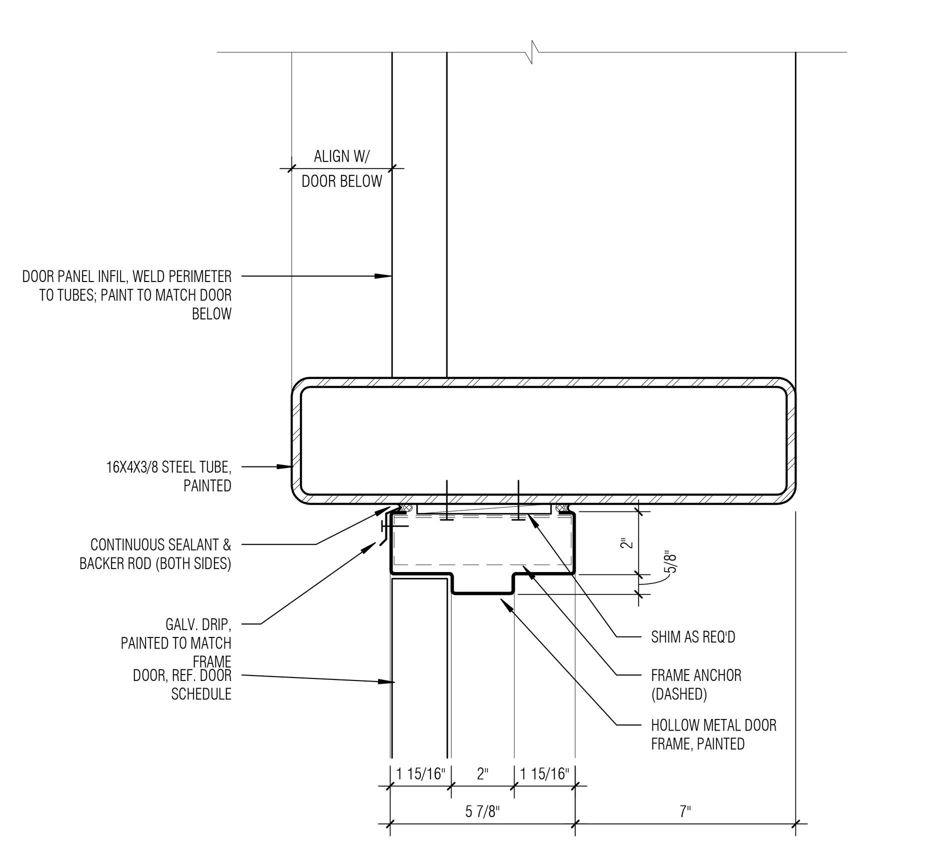

(8) DR ACM SILL-STEEL-HMTL DR HD
SCALE: 3" = 1'-0"

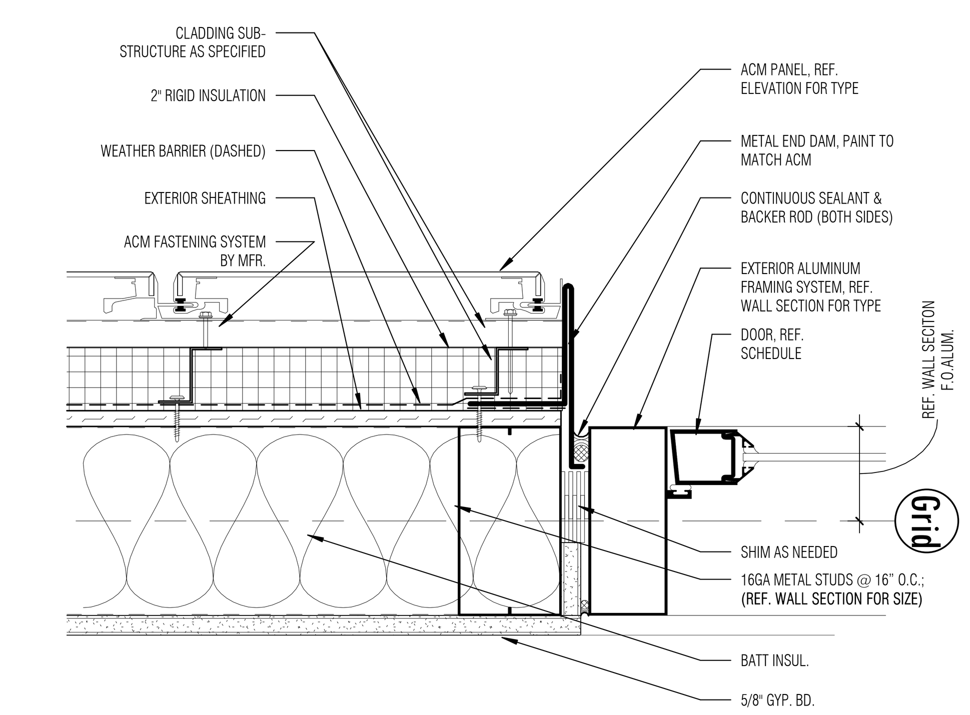

(9) JAMB - RECESSED @ STOREFRONT/ACM/STUD
SCALE: 3" = 1'-0"

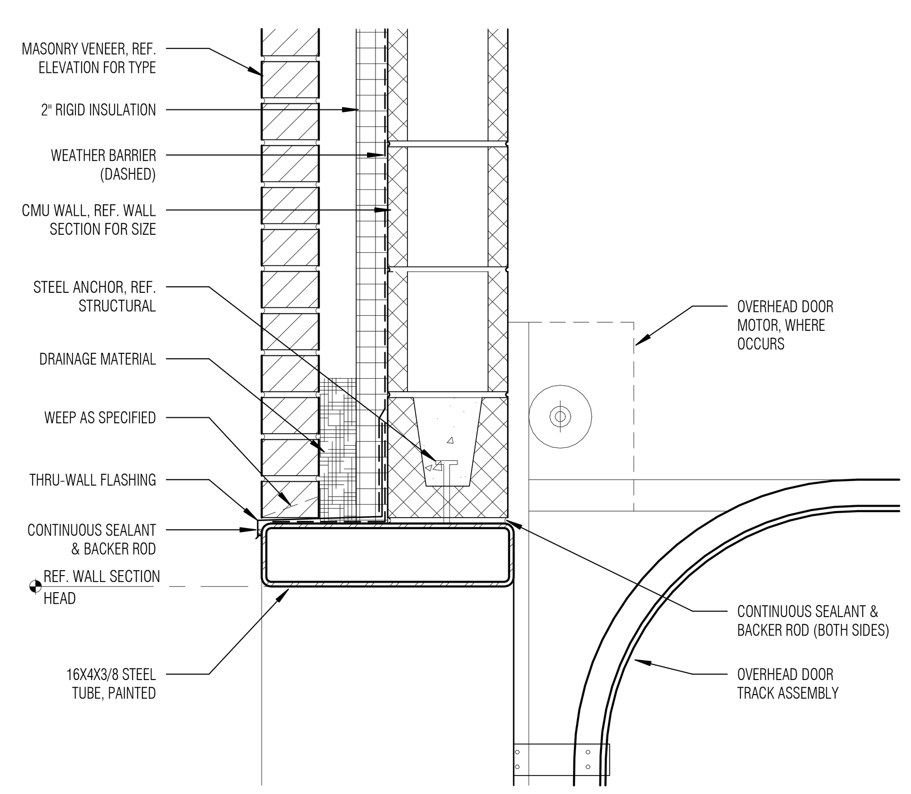

(11) DR OH SECT HD @ CMU-MASONRY W/ STEEL
SCALE: 1 1/2" = 1'-0"

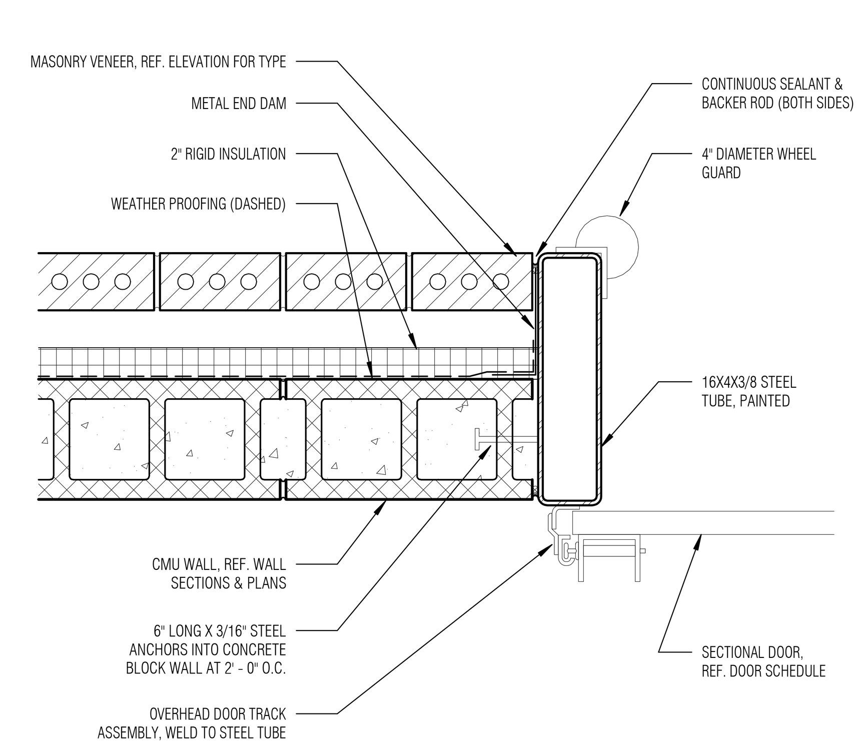

(12) DR OH SECT JB @ CMU-MASONRY W/ STEEL
SCALE: 1 1/2" = 1'-0"

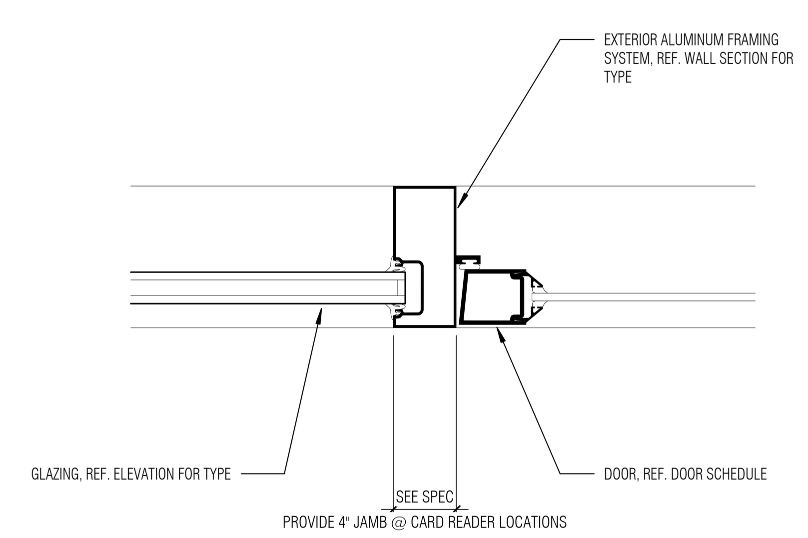

(13) DR AFSSF EXT DOOR JB SIDELITE
SCALE: 3" = 1'-0"

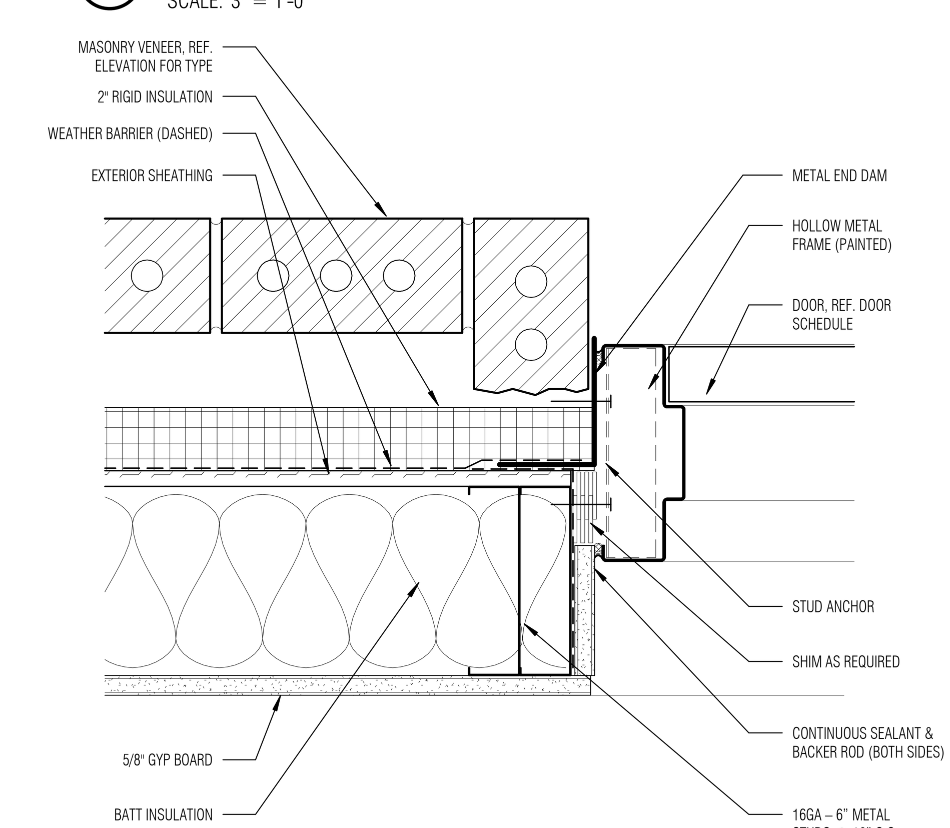

(14) DR MTLS HMTL-JB MAS
SCALE: 3" = 1'-0"

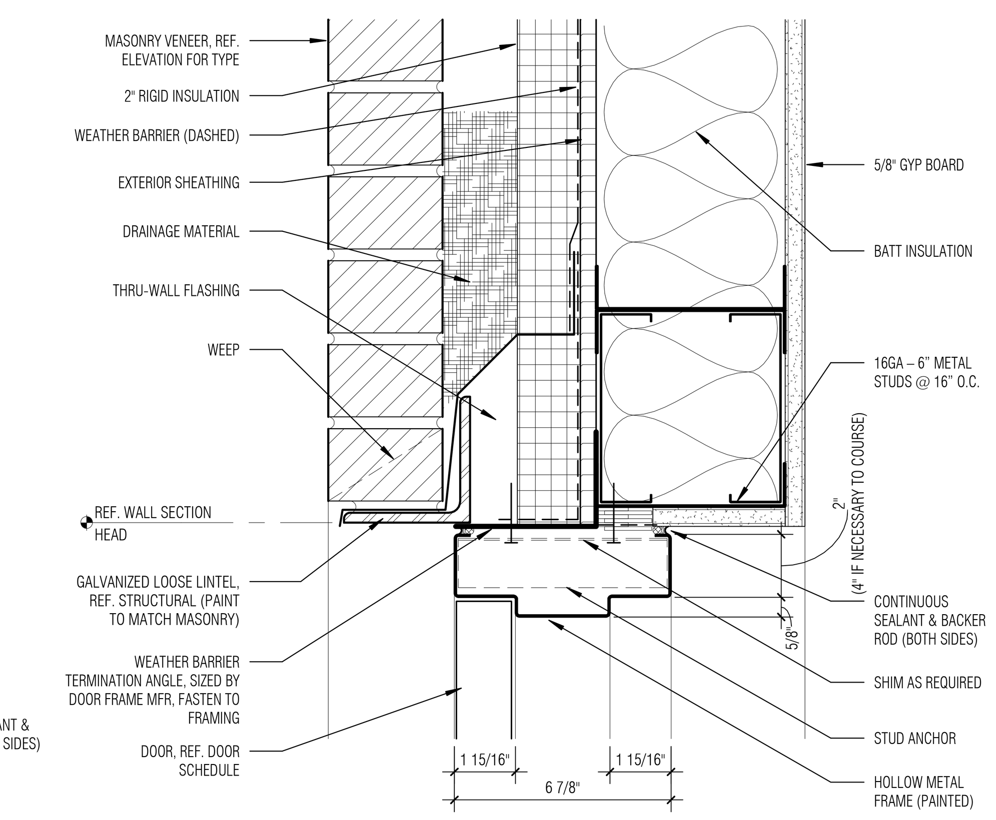

(15) DR MTLS HMTL-HD MAS
SCALE: 3" = 1'-0"

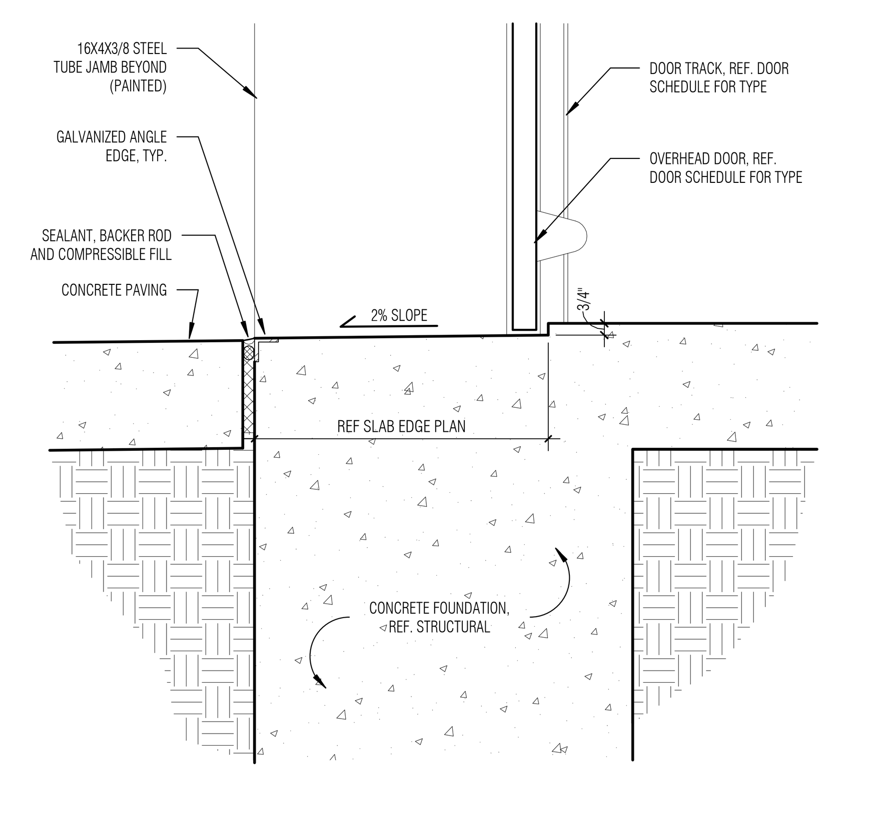

(16) DR OH SILL TYP
SCALE: 1 1/2" = 1'-0"

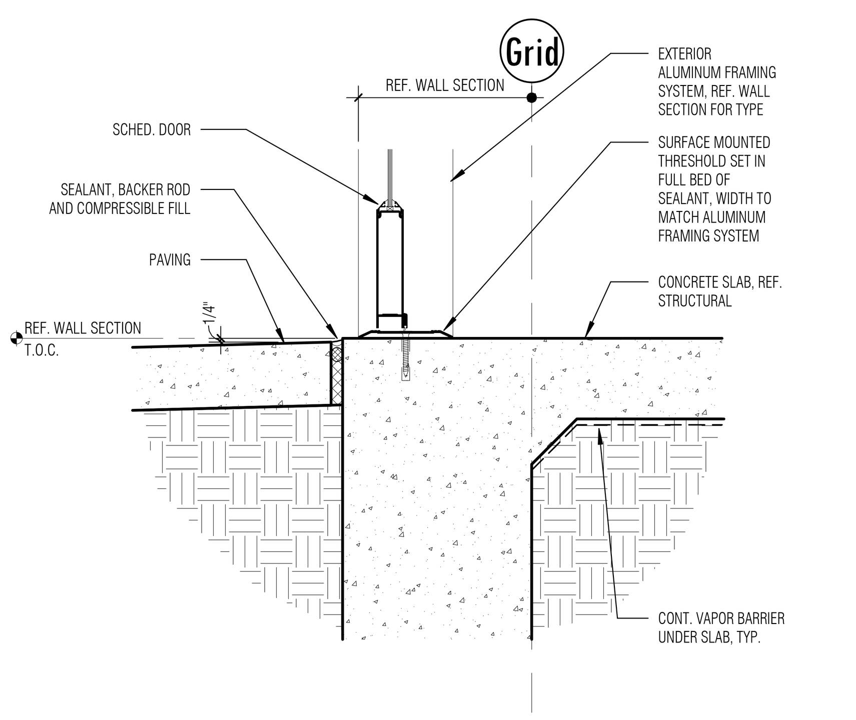

(17) DR AFS-DOOR SILL TYP
SCALE: 1 1/2" = 1'-0"

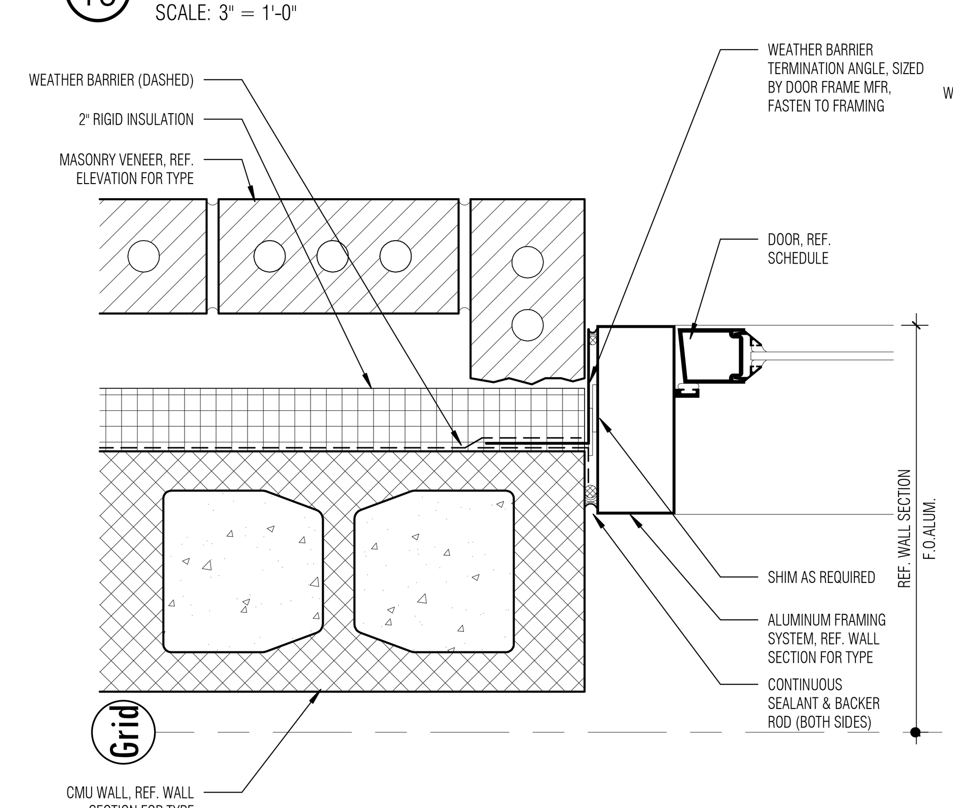

(18) DR CMU AFSSF EXT-MAS JB
SCALE: 3" = 1'-0"

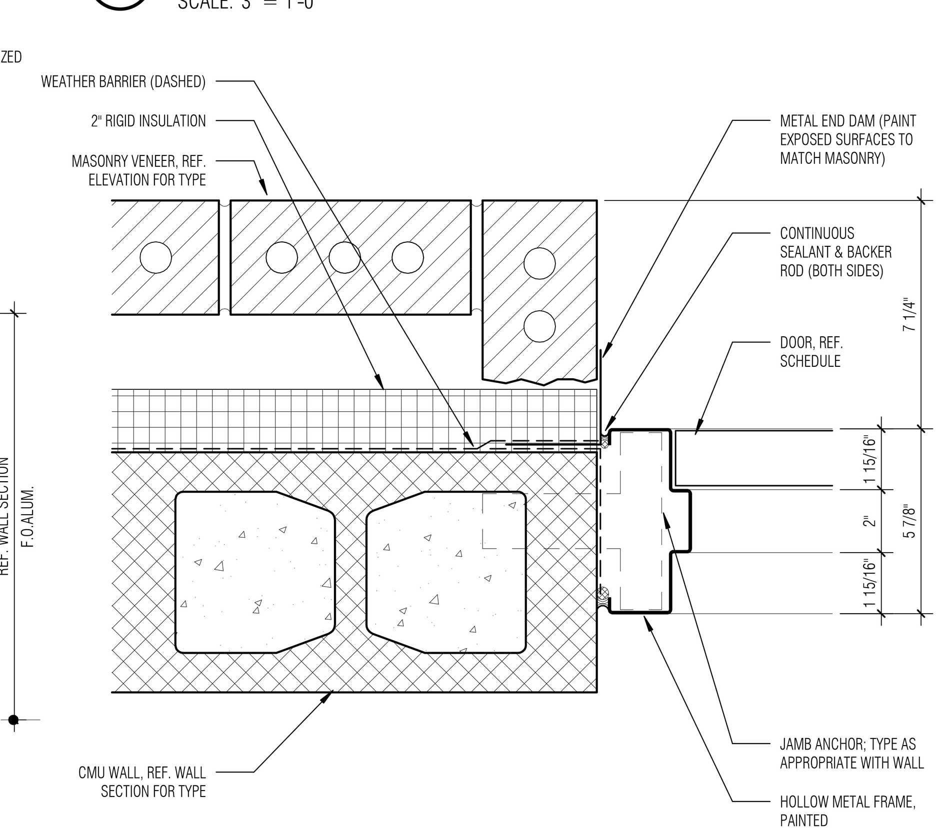

(19) DR CMU HMTL EXT-MAS JB
SCALE: 3" = 1'-0"

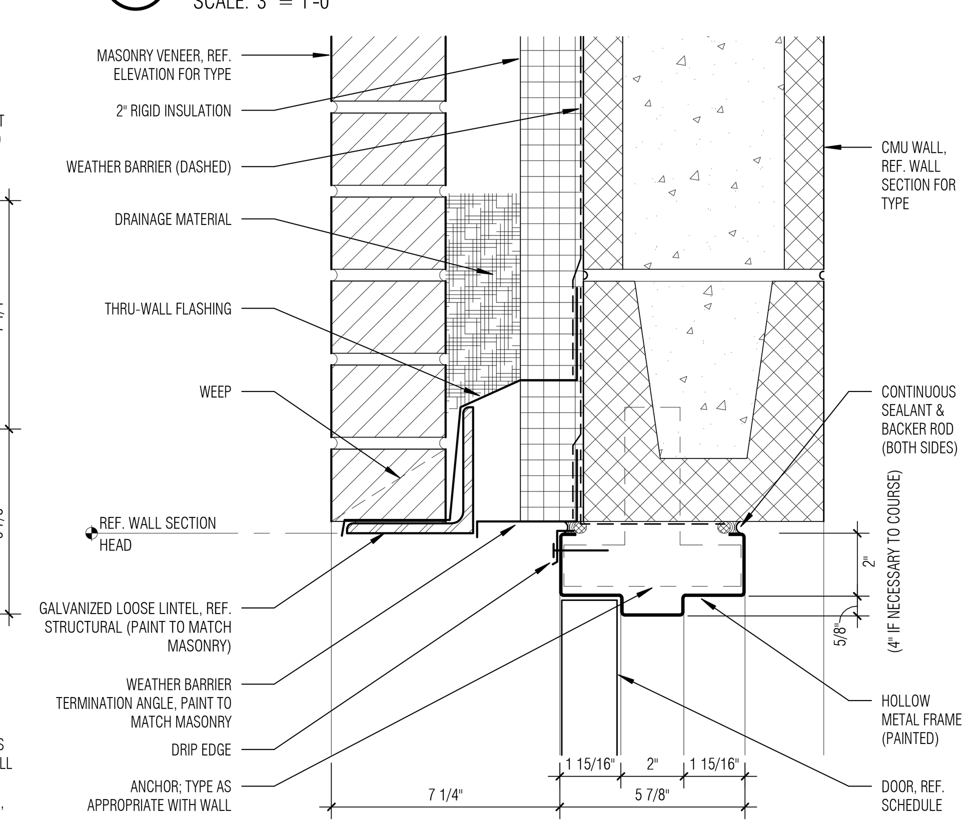

(20) DR CMU HMTL EXT-MAS HD
SCALE: 3" = 1'-0"

Architect: Brinkley Sargent Wiginton Architects (972) 960-9970
Landscape: Kendall Landscape Architecture (214) 739-3226
Structural: L.A. Fuess Partners, Inc (214) 593-1118
MEP: M-E Engineers (214) 741-1589
Civil: KSA Engineers, Inc (903) 236-7700
Technology: M-E Engineers (303) 421-6656

BRINKLEY SARGENT WIGINTON ARCHITECTS

LONGVIEW POLICE DEPARTMENT

518 W. SOUTH ST. LONGVIEW, TEXAS 75601

HISTORY		
#	DATE	DESCRIPTION

REGISTERED ARCHITECT HAROLD E. SARGENT 9941 STATE OF TEXAS 08/19/2020

DOOR DETAILS - EXTERIOR

21719
08/19/2020
A704

BID ISSUE

8/18/2020 4:16:45 PM
D:\Revit Locals\LPD_CENTRAL_A19_bcochener_08-18-2020.rvt

© 2020 Brinkley Sargent Wiginton Architects, Inc.

EQUIPMENT SCHEDULE

REV.	EQNUM	COUNT	DESCRIPTION	MANUFACTURER_S	MODEL_S	PROVIDER	WIDTH	DEPTH	HEIGHT	MECH REQD	ELEC REQD	PLUM REQD	DATA REQD
	88XX	6	SERVER CABINET	REF. TECHNOLOGY	REF. TECHNOLOGY	TECH	2' - 0"	3' - 0"	7' - 0"		Y		Y
	516	2	MICROWAVE	VIKING SERIES 3	RMV320	OFOI	1' - 5"	1' - 7"	11"		Y		
	1112-402	2	MARKER BOARD	CLARIDGE	S84X2LCS - MAP RAIL ADD	CFCI	2' - 0"	1"	4' - 0"				
	1112-403	7	MARKER BOARD	CLARIDGE	S84X3LCS - MAP RAIL ADD	CFCI	3' - 0"	1"	4' - 0"				
	1112-404	6	MARKER BOARD	CLARIDGE	S84X4LCS - MAP RAIL ADD	CFCI	4' - 0"	1"	4' - 0"				
	1112-406	16	MARKER BOARD	CLARIDGE	S84X6LCS - MAP RAIL ADD	CFCI	6' - 0"	1"	4' - 0"				
	1112-408	13	MARKER BOARD	CLARIDGE	S84X8LCS - MAP RAIL ADD	CFCI	8' - 0"	1"	4' - 0"				
	1112-410	1	MARKER BOARD	CLARIDGE	S84X10LCS - MAP RAIL ADD	CFCI	10' - 0"	1"	4' - 0"				
	1112-412	3	MARKER BOARD	CLARIDGE	S84X12LCS - MAP RAIL ADD	CFCI	12' - 0"	1"	4' - 0"				
	1112-416	5	MARKER BOARD	CLARIDGE	S84X16LCS - MAP RAIL ADD	CFCI	16' - 0"	1"	4' - 0"				
	1119-43	1	MAGNETIC MOBILE MARKER BOARD 48WX36H	LUXOR	MB4836WW	OFOI	4' - 4"	1' - 9"	5' - 7"				
	1121-402	2	TACK BOARD	CLARIDGE	#S84X23102	CFCI	2' - 0"	1"	4' - 0"				
	1121-403	4	TACK BOARD	CLARIDGE	#S84X33102	CFCI	3' - 0"	1"	4' - 0"				
	1121-404	1	TACK BOARD	CLARIDGE	#S84X43102	CFCI	4' - 0"	1"	4' - 0"				
	1121-406	2	TACK BOARD	CLARIDGE	#S84X63102	CFCI	6' - 0"	1"	4' - 0"				
	1121-408	2	TACK BOARD	CLARIDGE	#S84X83102	CFCI	8' - 0"	1"	4' - 0"				
	1126-24	7	BULLETIN BOARD CABINET	CLARIDGE	1024	CFCI	4' - 0"	4"	4' - 0"				
	1231-1016	5	PAPER PASS- NON-RICOCHET	ARMORTEX	RMDT-1016	CFCI	1' - 4"	10"	2"				
	1232	2	PAPER PASS- OPEN	ARMORTEX	RMDT-1016	CFCI	1' - 4"	10"	2"				
	1241	4	DEAL DRAWER	CR LAURENCE	DD1616	CFCI	1' - 4"	1' - 8"	5"				
	1317-19	3	COMPUTER MONITOR - 19-INCH	TBD - BY OWNER	TBD - BY OWNER	OFOI	0"	0"	0"		Y		Y
	1319	1	COMPUTER KEYBOARD	TBD - BY OWNER	TBD - BY OWNER	OFOI	1' - 6"	7"	1"				
	1341-M	2	PRINTER - FLOOR - MEDIUM	TBD - BY OWNER	TBD - BY OWNER	OFOI	2' - 0"	2' - 0"	3' - 6"		Y		Y
	1343-L	2	COPIER - FLOOR - LARGE	TBD - BY OWNER	TBD - BY OWNER	OFOI	0"	0"	0"		Y		Y
	1343-M	5	COPIER - FLOOR - MEDIUM	TBD - BY OWNER	TBD - BY OWNER	OFOI	2' - 1"	2' - 4"	3' - 8"		Y		Y
	1345	16	DESKTOP PRINTER-COPIER-FAX	TBD - BY OWNER	TBD - BY OWNER	OFOI	0"	0"	0"		Y		Y
	1349-72	1	PLOTTER - FLOOR - 48" WIDE	TBD - BY OWNER	TBD - BY OWNER	OFOI	6' - 4"	3' - 3"	3' - 1"		Y		Y
	1351	6	SHREDDER	TBD - BY OWNER	TBD - BY OWNER	OFOI	2' - 0"	2' - 0"	3' - 4"		Y		
	1522-3	1	KEY CABINET - ELECTRONIC	MORSE WATCHMAN	ILLUMINATED SYSTEM 3 MODULE	CFCI	1' - 9"	1' - 1"	2' - 10"				
	1522-6	1	KEY CABINET - ELECTRONIC	MORSE WATCHMAN	ILLUMINATED SYSTEM 6 MODULE	CFCI	2' - 4"	1' - 1"	2' - 10"				
	1533	5	AED CABINET, COORDINATE FINAL LOCATION OF UNITS WITH OWNER	AEDS TODAY	#1435F12 SS	CFCI	1' - 6"	7"	1' - 6"				
	1541-A	2	FIRE EXTINGUISHER - BRACKET MOUNTED (2A:10B:C)	LARSEN'S	882 WITH HT15 1/2 AND PTD-182	CFCI	6"	6"	1' - 10"				
	1541-B	1	FIRE EXTINGUISHER - BRACKET MOUNTED (3A40B:C)	LARSEN'S	1521 WITH MP5-A AND PTD-182	CFCI	4"	4"	1' - 5"				
	1542	6	FIRE EXTINGUISHER CABINET, SEMI-RECESSED	LARSEN'S	2409-R7 WITH MP10 AND PTD-182	CFCI	9"	5"	2' - 0"				
	1543	2	FIRE EXTINGUISHER CABINET, RECESSED	LARSEN'S	2409-R2 WITH MP10 AND PTD-182	CFCI	10"	6"	2' - 0"				
	1761-S23	17	23 GALLON TRASH CONTAINER	RUBBERMAID	FG792020	OFOI	1' - 5"	1' - 4"	2' - 10"				
	1761-W50	1	TRASH CAN - 50 GALLON - WHEELED	RUBBERMAID	FG285100BLA	OFOI	2' - 0"	2' - 0"	3' - 11"				
	1911-1827	1	ROLLING TOOL CABINET	HUSKY	H4TR1R	OFOI	2' - 3"	1' - 6"	2' - 10"				
	1911-1852	1	ROLLING TOOL CABINET	HUSKY	HOTC5218B1QES	OFOI	4' - 7"	1' - 6"	5' - 5"				
	1951	1	TOOL HOLDER / CLOSER ORGANIZER	RUBBERMAID	FG199200	CFCI	1' - 6"	4"	4"				
	2101	1	COFFIN	TBD	TBD	OFOI	7' - 0"	2' - 6"	2' - 0"	-	-	-	-
	2111-18	3	18 GAL STORAGE BIN	RUBBERMAID ROUGHNECK	#2215	OFOI	1' - 4"	2' - 0"	1' - 5"				
	2121-4048	4	PEG BOARD	TBD	TBD	CFCI		0"	4' - 0"				
	2121-22102	1	PEG BOARD	TBD	TBD	CFCI	8' - 6"	0"	1' - 10"				
	2141-L	2	SAFE (LARGE)	TBD - BY OWNER	TBD - BY OWNER	OFOI	2' - 6"	2' - 0"	5' - 0"				
	2141-M	6	SAFE (MEDIUM)	SENTRY	X041E	CFCI	1' - 4"	1' - 7"	1' - 6"				
	2143-24L	1	GUN SAFE (24 LONG GUNS)	U.S. SAFE CO.	PATRIOT SERIES P22	CFCI	2' - 6"	2' - 0"	4' - 11"		Y		Y
	2151	6	HELMET CABINET (2)/SUIT HANGER(4)	PIT PRODUCTS	904	CFCI	2' - 8"	1' - 4"	1' - 11"	-	Y	-	-
	2211	1	SINGLE-TIER CLOSET ROD AND SHELF	TBD	TBD	CFCI							
	2213	4	TWO-TIER CLOSET ROD AND SHELF	TBD	TBD	CFCI							
	2301-2DF	14	LOCKER	PENCO	6250 (DOUBLE TIER)	CFCI	1' - 6"	2' - 0"	6' - 0"				
	2301-4DF	28	LOCKER	PENCO	QUADRUPLE TIER	CFCI	1' - 6"	2' - 0"	6' - 0"				
	2321-2	24	Z-STYLE LOCKER, W/ MAIL SLOTS	REF. SPECIFICATIONS		CFCI	1' - 0"	1' - 9"	6' - 0"				
	2341-18B	192	PERSONNEL DUTY LOCKER 18"W BENCH/DWR	SPACESAVER	FREESTYLE 18X24 W/ BENCH	CFCI	1' - 6"	2' - 0"	6' - 0"				
	2341-36B	24	PERSONNEL DUTY LOCKER 36"W BENCH/DWR	SPACESAVER	FREESTYLE 36X24 W/ BENCH	CFCI	3' - 0"	2' - 0"	6' - 0"				
	2391-02AB	1	EVIDENCE LOCKER	TIFFIN	02AB	CFCI	3' - 0"	2' - 0"	6' - 10"				
	2391-03AA	1	EVIDENCE LOCKER	TIFFIN	03AA	CFCI	3' - 0"	2' - 0"	6' - 10"				
	2391-05AB	1	EVIDENCE LOCKER	TIFFIN	05AB	CFCI	3' - 0"	2' - 0"	6' - 10"				
	2391-05AC	1	EVIDENCE LOCKER	TIFFIN	05AC	CFCI	3' - 0"	2' - 0"	6' - 10"				
	2391-06AC	1	EVIDENCE LOCKER	TIFFIN	06AC	CFCI	3' - 0"	2' - 0"	6' - 10"				
	2391-08AA	1	EVIDENCE LOCKER	TIFFIN	08AA	CFCI	3' - 0"	2' - 0"	6' - 10"				
	2391-14AB	1	EVIDENCE LOCKER	TIFFIN	14AB	CFCI	3' - 0"	2' - 0"	6' - 10"				
	2391-24AA	1	EVIDENCE LOCKER	TIFFIN	24AA	CFCI	3' - 0"	2' - 0"	6' - 10"				
	2391-ERF82	1	EVIDENCE LOCKER	TIFFIN	ERF82	CFCI	3' - 0"	2' - 0"	6' - 10"				
	2411-TW	7	BICYCLE TRACK RACK - WALL MOUNT	DERO	TRACK RACK	CFCI	8' - 4"	3' - 8"	0"				
	2541-36	3	36" EXPANDABLE WEAPONS RACK	DATA LINK		CFCI	3' - 0"	1' - 1"	7' - 0"				

EQUIPMENT SCHEDULE

REV.	EQNUM	COUNT	DESCRIPTION	MANUFACTURER_S	MODEL_S	PROVIDER	WIDTH	DEPTH	HEIGHT	MECH REQD	ELEC REQD	PLUM REQD	DATA REQD
	2542-4B	2	BI-FOLD GATE WEAPONS RACK	DATA LINK		CFCI	3' - 6"	1' - 3"	4' - 0"				
	2561-4R	4	PISTOL LOCKER, 4-COMPARTMENT, RECESSED	AMERICAN LOCKER	WMPL4P	CFCI	1' - 2"	4"	2' - 4"				
	2562-10W	3		STOREMORESTORE	SMS-58-LGC341290	CFCI	2' - 10"	1' - 0"	7' - 6"	-	-	-	-
	2681	1	FLAMMABLE CABINET	TBD	TBD	OFOI	3' - 7"	1' - 6"	5' - 5"	Y			
	2831-3060	3	WORK BENCH	TBD	TBD	CFCI	5' - 0"	2' - 6"	2' - 11"		Y		
	2834-D530	4	STAINLESS STEEL TABLE WITH LOW SHELF + CASTERS	RDM	H-5689 + H-5746	CFCI	5' - 0"	2' - 6"	3' - 0"				
	2834-D630	4	STAINLESS STEEL TABLE WITH LOW SHELF	RDM	H-5690	CFCI	6' - 0"	2' - 6"	3' - 0"				
	2834-S530	1	STAINLESS STEEL TABLE WITHOUT LOW SHELF	RDM	H-5000	CFCI	5' - 0"	2' - 6"	3' - 0"				
	2900	3	IRONMAN FLOOR MOUNT BENCH	NORIX	IBF-48	CFCI	4' - 0"	1' - 6"	1' - 6"				
	3113	1	VENDING MACHINE - BEVERAGE	TBD - BY OWNER	TBD - BY OWNER	OFOI	4' - 0"	3' - 4"	6' - 0"		Y		
	3321	1	RESIDENTIAL WASHER	WHIRLPOOL	WTW8500DC	CFCI	2' - 4"	2' - 4"	3' - 6"		Y	Y	
	3331	1	DRYER - RESIDENTIAL	WHIRLPOOL	WGD8700EC	CFCI	2' - 5"	2' - 8"	3' - 6"	Y	Y	Y	
	3413	1	UNDERCOUNTER REFRIGERATOR - LAB	TBD	TBD	CFCI	2' - 6"	2' - 0"	2' - 10"		Y		
	3427	1	WALK-IN COOLER (REFERENCE PLAN FOR DIMENSIONS)	TBD	TBD	CFCI	8' - 0"	12' - 0"	8' - 6"	Y	Y	Y	
	3452	1	30" BUILT-IN CONVECTION DOUBLE WALL OVEN	GE	PROFILE	CFCI	2' - 6"	2' - 3"	4' - 3"		Y		
	3471-W	9	3-TOP COMMERCIAL COFFEE MAKER - WITH WATER	BUNN	AXIOM 35-3	OFOI	1' - 4"	1' - 5"	1' - 6"		Y	Y	
	3486	1	HIGH HEAT COMMERCIAL DISHWASHER	WAREFORCE #WF-UH30		CFCI	2' - 1"	2' - 1"	2' - 10"		Y	Y	
	3487	1	UNDERCOUNTER DISHWASHER	BOSCH	SGX68U55UC	CFCI	2' - 0"	2' - 0"	2' - 8"		Y	Y	
	3515	3	SIDE BY SIDE REFRIGERATOR	TBD	TBD	CFCI	3' - 0"	2' - 6"	5' - 9"		Y	Y	
	3516	1	SIDE BY SIDE REFRIGERATOR WITH BOTTOM CHEST FREEZER, NO WATER OR ICE	KENMORE ELITE	71303	CFCI	2' - 9"	2' - 11"	5' - 9"		Y	N	
	3521-32	7	U.C. REF. 32" (ADA)	SUMMIT	FF6ADA	CFCI	2' - 0"	2' - 0"	2' - 8"		Y		
	3523-34	2	REFRIGERATOR - UNDERCOUNTER	TBD	TBD	CFCI	2' - 0"	2' - 0"	2' - 10"				
	3527	1	FREEZER - UPRIGHT	TBD	TBD	CFCI	2' - 9"	2' - 7"	5' - 5"		Y		
	3571	3	MICROWAVE	GE	PES7227SLSS	OFOI	2' - 0"	1' - 7"	1' - 2"		Y		
	3613-N	1	UNDERCOUNTER ICE-MAKER - CUBER (W/ ADJ. LEGS)	MANITOWOC	UNF0200	CFCI	1' - 8"	2' - 2"	2' - 9"		Y	Y	
	3613-NA	1	UNDERCOUNTER ICE-MAKER - CUBER - ADA	PERLICK	H80CIMS-AD	CFCI	1' - 3"	1' - 11"	2' - 8"		Y	Y	
	3655-NA10	3	COUNTERTOP ICE AND WATER DISPENSER, NUGGET	FOLLET, LLC	7CI100A-IW-CF-ST-00	OFOI	1' - 5"	2' - 0"	2' - 8"		Y	Y	
	3663-200	1	LARGE CAPACITY ICE-MAKER (CUBER)	HOSHIZAKI	KM-515MAH W/ B-500PF	CFCI	2' - 6"	2' - 10"	6' - 8"		Y	Y	
	4313	1	ELLIPTICAL TRAINER	TBD	TBD	OFOI	2' - 1"	6' - 3"	5' - 9"		Y		Y
	4315	1	TREADMILL	PRECOR	TRM 885	OFOI	7' - 4"	2' - 9"	5' - 11"		Y		Y
	4317	3	INDOOR ROWER	CONCEPT2	MODEL D	OFOI	8' - 0"	2' - 0"	5' - 2"				
	4366-24	1	EXERCISE RIG (24-FOOT)	ROGUE	MONSTER LITE WALL MOUNT RIG MLW-24	CFCI	23' - 11"	6' - 0"	9' - 0"				
	4400	23	ZEBRA ATHLETICS TRAINING MATS	ZEBRA PRO SERIES MMA MATS (2X1 METER)		CFCI	6' - 7"	3' - 3"	2"	N	N	N	N
	4400-01	1	ZEBRA ATHLETICS TRAINING MATS	ZEBRA PRO SERIES MMA MATS (1X1 METER)		CFCI	3' - 3"	3' - 3"	2"	N	N	N	N
	4401	31	ZEBRA ATHLETICS WALL PADS	ZEBRA WALL PADS WITH WALL PAD CHANNEL		CFCI	2' - 0"	2"	6' - 0"	N	N	N	N
	5311-T	1	FLOOR MOUNTED RIFLE CLEARING TUBE	WEAPONS CLEAR LLC	RIFLE CLEAR	CFCI	9"	2' - 1"	2' - 6"				
	5527-36	4	EVIDENCE DRYING CABINET - 36" DUCTED	TBD - VERIFY DIMENSIONS	TBD - VERIFY DIMENSIONS	CFCI	3' - 0"	2' - 4"	7' - 2"	Y	Y		
	5535-361	3	FUME HOOD, DUCTLESS, COUNTEROP	THERMO SCIENTIFIC	B1115361	CFCI	3' - 0"	2' - 3"	2' - 7"		Y		
	5547-24B	1	FINGERPRINT FUME CHAMBER - 24" BENCHTOP (AUTO CYANOACRYLATE)	AIR SCIENCE	SAFEFUME CA24S	CFCI	2' - 0"	2' - 0"	2' - 0"		Y		
	5547-60T	1	FINGERPRINT FUME CHAMBER - 60" FLOOR (AUTO CYANOACRYLATE)	AIR SCIENCE	SAFEFUME CA60T	CFCI	5' - 0"	2' - 4"	6' - 3"		Y		
	5551	2	CEILING MOUNTED EXTRACTOR ARM/FLEXIBLE DUCT	ENVIROFLEX	SNORKVAC FUME ARM(103.1065); S.S. CEILING BRACKET(103.1106)	CFCI	0"	0"	0"	Y	Y		
	5565	1	INDUSTRIAL AIR SCRUBBER (ON CASTERS)	RAINIER SUMMIT	ATMOSAIR	CFCI	1' - 6"	1' - 6"	2' - 7"		Y		
	7211-L	5	EPOXY RESIN LAB COUNTERTOP, REF. PLAN FOR SIZE AND SHAPE	TBD	TBD	CFCI	0"						
	7212	8	INSET STEEL WALL CABINET	REF. SPECIFICATIONS	REF. ELEVATIONS	CFCI		1' - 2"	2' - 0"				
	7213	5		REF. SPECIFICATIONS	REF. ELEVATIONS	CFCI	3' - 0"	2' - 0"					
	7214	5	INSET STEEL BASE CABINET	REF. SPECIFICATIONS	REF. ELEVATIONS	CFCI		2' - 0"					
	7661	2	DOG CRATE	MIDWEST	748UP	OFOI	2' - 6"	4' - 1"	2' - 11"				
	8625	1	ELECTRICAL REEL	REF. ELECTRICAL	REF. ELECTRICAL	ELEC	8"	2' - 0"	2' - 0"		Y		
	8661-2	1	CEILING MOUNTED EXAM LIGHT	MAQUET	LUCEA 10	CFCI	0"	0"	0"		Y		
	8731-V030	1	AIR COMPRESSOR (VERTICAL - 30-GALLON)	CAMBELL HAUSFELD	VT6358	PLUM	2' - 4"	2' - 4"	2' - 5"	Y	Y		
	8735	5	HOSE REEL - COMPRESSED AIR	REF. PLUM	REF. PLUM	PLUM	8"	2' - 0"	2' - 0"			Y	
	8745	3	HOSE REEL - WATER	REF. PLUM	REF. PLUM	PLUM	8"	2' - 0"	2' - 0"			Y	
	8765	1	COMBO DRENCH SHOWER/EYEWASH	BRADLEY	S19-310AC	CFCI	2' - 8"	3' - 11"	7' - 7"			Y	
	8811-UPS	1	UNINTERUPPTED POWER SUPPLY (UPS)	REF. TECHNOLOGY	REF. TECHNOLOGY	TECH	3' - 6"	8' - 0"	4' - 0"		Y		Y
	8824-2	9	2-POST SERVER RACK	REF. TECHNOLOGY	REF. TECHNOLOGY	TECH	1' - 9"	2' - 6"	7' - 0"		Y		Y
	8824-4	6	4-POST SERVER RACK	REF. TECHNOLOGY	REF. TECHNOLOGY	TECH	2' - 8"	4' - 0"	7' - 0"		Y		Y
	8851-G	9	TALK-THRU COMMUNICATOR INTERCOM - (AT GLAZING)	NORCON	TTU-3	TECH	6"	2"	2"		Y		
	8911-R144	1	CEILING MOUNTED, ROLL DOWN PROJECTION SCREEN	REF. AV	REF. AV	AV	12' - 0"	0"	0"		Y		
	8915	2	VIDEO PROJECTOR	REF. AV DRAWINGS	REF. AV DRAWINGS	OFOI	0"	0"	0"		Y		Y
	8921-36	4	TELEVISION - 36" FLAT PANEL	TBD	TBD	AV	0"	0"	0"		Y		Y
	8921-42	28	TELEVISION - 42" FLAT PANEL	TBD	TBD	AV	0"	0"	0"		Y		Y
	8921-50	28	TELEVISION - 50" FLAT PANEL	TBD	TBD	AV	0"	0"	0"		Y		Y
	8921-55	6	TELEVISION - 55" FLAT PANEL	TBD	TBD	AV	0"	0"	0"		Y		Y
	8921-70	3	TELEVISION - 70" FLAT PANEL	TBD	TBD	AV	0"	0"	0"		Y		Y
	8921-90	3	TELEVISION - 90" FLAT PANEL	TBD	TBD	AV	0"	0"	0"		Y		Y
	8921-144	1	TELEVISION - 90" X 144" FLAT PANEL	REF. AV	REF. AV	OFOI	0"	0"	0"		Y		Y
	XXXX-LP	1	MONSTER LAT PULL DOWN/LOW ROW	ROGUE	MONSTER LAT PULL DOWN/LOW ROW	OFOI	5' - 0"	3' - 4"	8' - 0"				

BRINKLEY SARGENT WIGINTON ARCHITECTS

Architect: Brinkley Sargent Wiginton Architects (972) 960-9970
Landscape: Kendall Landscape Architecture (214) 739-3226
Structural: L.A. Fuess Partners, Inc (214) 593-1118
MEP: M-E Engineers (214) 741-1589
Civil: KSA Engineers, Inc (903) 236-7700
Technology: M-E Engineers (303) 421-6656

LONGVIEW POLICE DEPARTMENT

518 W. SOUTH ST. LONGVIEW, TEXAS 75601

HISTORY

#	DATE	DESCRIPTION

REGISTERED ARCHITECT HAROLD E. SARGENT 9941 STATE OF TEXAS

08/19/2020

EQUIPMENT SCHEDULE

21719

08/19/2020

A711

BID ISSUE

8/18/2020 4:17:19 PM
D:\Revit Locals\LPD_CENTRAL_A19_bcocherer_08-18-2020.rvt

© 2020 Brinkley Sargent Wiginton Architects, Inc.

ROOM FINISH SCHEDULE - LEVEL 1

REV.	NUMBER	ROOM	FLOOR	BASE	WALL N	WALL S	WALL E	WALL W	CEILING	FINISH NOTES
	1001	VESTIBULE	CPT1	--	GL/ AL	GL/AL	GL/ AL	GL/ AL	P3	
	1002	AFTER HOURS COUNTER	PT2	PT1	GL/ AL	GL/AL	GL/AL	PT1/ PT3/ AWP1/P1	P3	1, 2, 14
	1003	DISPLAY	TERRAZZO							
	1004	DISPLAY	PT2	--	GL/AL	GL/AL	P3	GL/AL	P3	
	1005	LOBBY	PT2/ PT2A	PT1 / PT3	GL/ AL / P1	PT1/ PT1A/ AWP1/ P1/ PT6	PT1 / PT1A/ PT3/ AWP1/ P1	PT1/ PT3/ AWP1/ P1	P1/ P3 / AL	1, 2, 3,14, 24,
	1006	SOFT INTERVIEW (5)	CPT7	RB1	VWC2	VWC2	VWC2	VWC2		
	1007	PUBLIC TOILET	PT2A	CT2/ PT1	PT1	CT2	CT2	CT2	P3	
	1008	VESTIBULE	LVT1	RB1	P5	P5	P5	P5		
	1009	SEX OFFENDER FILES	LVT1	RB1	P5	P5	P5	P5		
	1011	PUBLIC SERVICE WINDOW	LVT1	RB1	P5	P5	P5	--		2
	1012	RAMP	LVT1	RB1	P5	P5	P5	P5		
	1013	TOILET	PT9	CT1/ PT8A	PT8A	CT1	CT1	CT1	P3	
	1014	HOLD. JUV.	LVT1	RB1	P5	P5	WP1	GL/ST		
	1015	COFFEE	LVT1	RB1	P5	P5	P5	P5		2
	1016	SECURITY DESK	LVT1	RB1	MP1/ P1/ GL/ ST	P1/ GL/ ST	MP1/ P1	P1/GL/ ST	P3	1, 2,
	1017	RAMP	LVT1	RB1	P5	P5	P5	P5		
	1018	WAITING (5)	LVT1	RB1	PT4A/ P5	PT4A/ P5	PT4A/ P5	PT4A/ P5		26
	1019	SEX OFFENDER REG.	LVT1	RB1	WC1	WC1	WC1	WC1		
	1021	SEX OFFENDER REG.	LVT1	RB1	WC1	WC1	WC1	WC1		
	1022	PHOTO/FINGERPRINT	LVT1	RB1	P5	P5	P5	P7		1,2
	1101	VESTIBULE	CPT6	PT6/RB1	P5/ GL/ /ST	P5/ GL/ ST	P5	P5/ PT6		1,2
	1102	COMMUNICATIONS CENTER	CPT6	RB1	P5/ AWP3	P5/ AWP3	P5/ AWP3	P5/ AWP3		2,7,18,
	1103	AUX CALL TAKER	CPT6	RB1	P5/ AL/ GL	P5	P5 /AL / GL	P5	P3	1, 2,
	1104	MANAGER	CPT6	RB1	P5	P5	P5	GL/ ST		
	1105	ADMINISTRATOR	CPT6	RB1	P5	P5	P5	GL/ST		
	1106	ADMIN. ASST.	CPT6	RB1	GL/ ST/ P5	P5	GL/ ST/ P5	P5		2
	1107	TRAINING CONSOLES	CPT6	RB1	GL/ST	P5	P5	P5		
	1108	TRAINING COORDINATOR	CPT6	RB1	P5	P5	P5	P5		
	1109	CORRIDOR	CPT6	RB1	P5	P5/ GL/ AL	P5	P5		
	1111	CORRIDOR	CPT6	RB1	GL/AL/ P5	P5	P5	P5/ GL/ AL		
	1112	BREAK	LVT1	RB1	P5	P5	AL/GL	P5		
	1113	CORRIDOR	CPT6	RB1	P5	P5	--	GL/AL		
	1114	CONFERENCE (9)	CPT6	RB1	GL/ AL	P5/ GL/ AL	P5	P5		
	1115	IT WORKROOM	CPT6	RB1	P5	P5	P5	P5		
	1116	SERVER ROOM	ASF	RB1	P5	P5	P5	P5		
	1117	TOILET	PT9	CT1/ PT8A	CT1	CT1	PT8A	CT1	P3	
	1118	TOILET	PT9	CT1/ PT8A	CT1	CT1	PT8A	CT1	P3	
	1120	COMPRESSOR	SC	RB1	P5	P5	P5	P5	P3	
	1121	CORRIDOR	PT5A	RB1	P5	GL/ AL /P5	BSB	P5		
	1201	VESTIBULE	CPT1	BSB	BSB	BSB/ GL/ AL	BB	BB	P3	
	1202	WORK/PROCESS DESK	PC	JPS5	JPS5	JPS5	JPS5	JPS5/ST/ GL	P3	11,2
	1203	SINGLE HOLDING	PC	JPS5	JPS5	JPS5	JPS5/ST/ GL	JPS	P3	11
	1204	SINGLE HOLDING	PC	JPS5	JPS5	JPS5	JPS5	JPS5	P3	11
	1205	SECURE VESTIBULE	PC	RB1	JPS5	JPS5	JPS5	JPS5	P3	
	1206	INTERROGATION (3)	CPT2	RB1	WC	WC	WC	WC		
	1207	TOILET	SV	SV	JPS5	JPS5	JPS5	JPS5	P3	12
	1208	SOUND VEST.	PC	RB1	JPS5	JPS5	JPS5	JPS5	P3	
	1301	RECORDS COUNTER	PT1A	PT1	PT1/GL/ AL	PT1	PT1	PT1	P3	2,14
	1302	DELIVERY STOR.	LVT1	RB1	P5	P5	P5	P5		
	1303	RECORDS CLERKS	CPT2	RB1	P5	P5	P5	P5		1,2,3
	1304	COPY/WORK/COFFEE	LVT1	RB1	P5	P5	P5	P5		2
	1305	SUPERVISOR	CPT2	RB1	P5	AL/GL/P5	P5	AL/GL/P5		
	1306	CORRIDOR	PC	QT/ PT5A	PT4A/ PT5/ GL/ST	GL/AL/ P5	BSB	BSB	P3	1,3,14,26
	1307	CENTRAL MAIL / OFFICER COUNTER	LVT1	RB1	P5	P5	P5	P5		2
	1308	ELEC. CLOSET	SC1	RB1	P5	P5	P5	P5		
	1309	IT/DATA CLOSET	SC1	RB1	P5	P5	P5	P5		
	1311	STAFF TOILET	PT9	CT1/ PT8A	CT1	CT1	PT8A	CT1	P3	
	1312	TRASH	PC	RB1	WP1	WP1	P5	WP1		
	1313	HONOR GUARD	LVT1	RB1	P5	P5	P5	P5		
	1314	PATROL LOCKERS	PC	QT	BSB	BSB	BSB	BSB	P3	2,3
	1315	CORRIDOR	PC	QT	BSB	BSB/ GL/ AL	--	BSB	P3	3
	1316	ICE/WATER/UTILITY	PC	QT	BSB	BSB	BSB	BSB	P3	2
	1317	ELEVATOR DROP	PC	QT	--	BSB	BSB	BSB	P3	
	1318	STAFF VEST.	CPT1	BSB/ PT5A	GL/ AL	PT4A/ P5	BSB	GL/AL	P3	1,2,14, 16, 26
	1319	K-9 OFFICE	PC	QT1	P5	P5	GL/ AL	P5	P3	
	1320	CORRIDOR								
	1401	EVID. WORK / LOCKERS	PC	RB1	P5	P5	P5	P5		2
	1402	MAJOR CASE / EVID. WORK	PC	RB1	P5	P5	P5	P5		2
	1403	STAFF SERVICE WINDOW	PC	RB1	P5	P5	P5	P5		2
	1404	EVIDENCE / PROPERTY WORK	CPT2	RB1	GL/AL/ P5	GL/ ST/ P5	P8	P5		1,2
	1405	EVID. VIEWING / ATTORNEY	LVT1	RB1	P5	P5	P5	P5		
	1406	TOILET	PT9	CT1/ PT8A	PT8A	CT1	CT1	CT1	P3	
	1407	SUPERVISOR	CPT2	RB1	P5	P5/ GL/ AL	P5	P5		
	1408	COFFEE	LVT1	RB1	P5	--	P5	P5		1,2
	1409	EV. PROP. FILES	LVT1	RB1	P5	P5	P5	P5		
	1411	PROPERTY / STORAGE	PC/SV1	RB1	P5	P5	P5	P5	P5	1,19
	1412	STORAGE	PC	RB1	P5	P5	--	P5		
	1413	WALK-IN COOLER	SC1		--	P5	P5	--		6
	1414	EVID. PROCESSING	PC	RB1	P5	P5	P5	P5		2
	1415	WEAPONS STORAGE	PC	RB1	P5	P5	P5	P5		
	1416	DRUG STORAGE	PC/SV1	RB1	P5	P5	P5	P5		1,19
	1424	JAN.	PC	CT1	P5	P5/ CT1	P5/ CT1	P5	P5	1, 22
	1426	LARGE PROP.	PC	RB1	P5	P5	P5	--	P5	
	1427	VEST. / AFTERHOURS DROP	SC1	--	P5	P5	P5	P5	P5	
	1429	DESTRUCTION	PC	RB1	P5	P5	P5	P5	P5	2
	1431	VEHICULAR PROCESSING	SC1	RB1	P7	P7	P7	P7	P3	
	1432	CLEAN DRESS	SV1	SV1	P5	P5	P5	P5		12
	1433	PRIMARY LAB	SV1	SV1	JPS5	JPS5	JPS5	JPS5	P3	1,2
	1434	POWDER PROCESSING	SV1	SV1	JPS5	JPS5	JPS5	JPS5	P3	2
	1435	ALTERNATE LIGHT	SV1	SV1	P7	P7	P7	P7		2
	1436	PES INVESTIGATORS	CPT5	RB1	P8	P5/ GL/ ST	P5	P5		
	1437	SERGEANT	CPT5	RB1	P5	P5	P5	P5		
	1438	COMPARISON LAB	LVT1	RB1	P5	P5	P5	P5		2
	1439	PES STORAGE	LVT1	RB1	P5	P5	P5	P5		
	1441	TOILET	PT9	CT1/ PT8A	CT1	PT8A	CT1	CT1	P3	
	1442	DRYING CABINETS	PC	RB1	P5	P5	P5	P5	P3	2,3
	1443	CORRIDOR	PC	QT	ST/ GL/BSB	AL/ GL/ BSB	AL/ GL	--	P3	3
	1501	VESTIBULE	PC	QT1	BSB	AL/ GL/ BSB	BSB	AL/ GL		
	1502	K-9 STORAGE	SC1	--	P5	P5	P5	P5		
	1503	TOILET	PT9	CT1/ PT8A	CT1	PT8A	CT1	CT1	P3	
	1504	CENTRAL JAN.	SV1	RB1	P5	P5/CT1	P5	P5/ CT1	P3	1, 22
	1505	CORRIDOR	LVT1	RB1	P5	P5	P5	P5		
	1506	MECHANICAL	SC1	RB1	P5	P5	P5	P5	P5	
	1508	VEHICLE MAINT. BAY	SC1	--	P5	P5	P5	P5	P3	2
	1509	FLEET STOR./WORK	SC1	--	P5	P5	P5	P5	P3	
	1511	FLEET OFFICE	LVT1	RB1	P5	P8	P5	P5		
	1512	EMERGENCY POWER	SC1	--	P5	P5	P5	P5	P5	
	1513	NORMAL POWER	SC1	--	P5	P5	P5	P5	P5	
	1514	COMPRESSOR	SC1	--	P5	P5	P5	P5	P5	
	1516	SWAT VEHICLE	SC1	--	P5	P5	P5	P5	P3	2
	1517	VESTIBULE	SC1	--	P5	P5	P5	P5	P3	
	1518	SWAT STORAGE / LOCKERS / EQUIP.	LVT1	RB1	P5	P5	P5	P5	P3	

ROOM FINISH SCHEDULE - LEVEL 1

REV.	NUMBER	ROOM	FLOOR	BASE	WALL N	WALL S	WALL E	WALL W	CEILING	FINISH NOTES
	1519	WEAPON CLEANING	LVT1	RB1	P5	P5	P5	P5	P3	2
	1521	ARMORY	SC1	--	P5	P5	P5	P5	P5	
	1522	SPRINKLER	SC1	--	P5	P5	P5	P5	P5	
	1601	BIKE PATROL	SC1	--	P5	P5	P5	P5	P5	
	1603	PATROL/TRAFFIC STOR.	SC1	--	P5	P5	P5	P5	P5	
	1604	GOLF CARTS	SC1	--	P5	P5	--	P5		21
	1605	MOTORCYCLE	SC1	--	P5	P5	P5	P5		21
	1606	TRAILERS	SC1	--	P5	P5	P5	P5		21
	1607	DRY VALVE/COMPRESSOR								
	EL-01	ELEVATOR	PT2A							
	EL-02	STAFF ELEVATOR	PT5A							
	ST-01	LOBBY STAIR	PT2	P1						8, 15
	ST-02	STAFF STAIR	PT5A/ PC	PT5A/ QT1	GL/ AL	P5	BSB/ GL/ AL	BSB/ AL/ GL/ PT4A/P5	P3	1,2,9,14,15,16,26,
	ST-03	EXIT STAIR	SC1	RB1	P5	P5	P5	P5	P5	10

FINISH NOTES

1. REFERENCE FINISH PLANS A811, A821, AND A831 FOR EXTENT / LAYOUT OF FINISHES.
2. REFERENCE INTERIOR ELEVATION SHEETS A901- A911 FOR EXTENT OF FINISHES/ MILLWORK
3. REFERENCE REFLECTED CEILING PLAN SHEETS A311- A332 FOR EXTENT/LAYOUT OF FINISHES.
4. ALL EXPOSED ELEMENTS AND PERIMETER WALL FROM FINISH CEILING TO STRUCTURE TO BE PAINTED P6.
5. EXPOSED STEEL BRACES TO BE PAINTED P6.
6. WALK IN COOLER IS A SPECIFIED ITEM TO BE BUILT IN PLACE.
7. REFERENCE MEP, TECHNOLOGY, EAV, AND SIGNAGE DRAWINGS FOR LOCATIONS OF ALL DEVICES IN FABRIC WALLS WHICH WILL REQUIRE BLOCKING TO PREVENT FABRIC FROM PUCKERING.
8. STAIR ST-01 (PUBLIC LOBBY)
   A. STAIR TREADS, PLATFORMS, AND RISERS TO BE PT2
   B. STRINGERS TO BE PAINTED P1
   C. RAILINGS FINISHES TO BE REFERENCED IN FINISH NOTE 15.
   D. STAIR NOSINGS TO BE SCHLUTER TREP-FL- EB
   E. GYPSUM BOARD CEILINGS UNDER STAIR SOFFITS TO BE PAINTED P3.
9. STAIR ST-02 (POLICE STAFF)
   A. STAIR TREADS, PLATFORMS, AND RISERS TO BE PT5A
   B. STRINGERS TO BE PAINTED P1
   C. RAILINGS FINISHES TO BE REFERENCED IN FINISH NOTE 15.
   D. STAIR NOSINGS TO BE SCHLUTER TREP-TAP
   E. GYPSUM BOARD CEILINGS UNDER STAIR SOFFITS TO BE PAINTED P3.
10. STAIR ST-03 (EXIT STAIRWELL)
   A. STAIR TREADS, PLATFORMS, AND RISERS TO BE SEALED CONCRETE (SC1)
   B. STRINGERS TO BE PAINTED P1.
   C. RAILINGS TO BE PAINTED P1.
11. PAINT ALL STEEL DOORS AND STEEL FRAMES JPS1.
12. PROVIDE SEAMLESS FLOORING AND INTEGRAL 4" BASE. PROVIDE SCHLUTER JOLLY- PG TO CAP BASE.
13 TILE BASE TO BE 8" HIGH.
14.TILE WALLS TO HAVE SCHLUTER TRIM AS FOLLOWS:
   A. TILE AT STEEL FRAMES TO BE JOLLY-AE
   B.FLOOR TO BASE TRANSITION TO BE DILEX-AHK
   C.OUTSIDE CORNERS TO BE RONDEC-AE.
15.REFERENCE INTERIOR ELEVATION SHEET 1/ A841 FOR EXTENT OF RAILING PAINT COLORS P1, P2 AND P4 WITH ALUMINUM PIPE RAIL AND PERFORATED ALUMINUM PANELS.
16. QT BASE TO BE 8" TALL . PT5A BASE SOLELY AT STAIR PLATFORM WHERE PT AND ALUMINUM WAINSCOT OCCURS.
17. 4" TILE BASE AT MILLWORK.
18. AWP 3 TO BE INSTALLED 8'-02" A.F.F. TO 11'-0" CEILING ABOVE (REFERENCE CEILING PLANS)
19. INSTALL SV1 FLOOR FINISH ON ROLLING FILE PLATFORM AFTER PLATFORM INSTALLATION. INSTALL POLISHED CONCRETE BELOW PLATFORM.
20. INSTALL SCHLUTER SCHIENE- AE (2MM) AT ALL HORIZONTAL JOINTS BETWEEN PT3.
21.NO PAINT ON EXPOSED GALVANIZED STRUCTURE AND METAL DECK.
22. INSTALL CT1 TO FULL EXTENT OF JANITOR SINK TO (CORNER TO CORNER OF SINK) ON BOTH WALLS TO A HEIGHT OF 4'-0" A.F.F.
23. NOT USED
24. CEILING SKYLIGHTS TO BE PAINTED P3. WOOD TRIM ADJACENT TO FIRE CURTAIN BASE PLATE TO BE P1.
25. WOOD TRIM AT CEILING TO BE PAINTED P1.
26. REFERENCE DETAIL 9/A925 FOR PT4A WAINSCOT TILE 56" TALL WITH FRYE REGLET DCS-625-50 CONTINUOUS RUN AND DRYWALL ABOVE PAINTED P5.
27. TILE BASE WITH FLOOR TO BASE TRANSITION DILEX-AHK AND JOLLY- AE CONTINUOUS AT TOP OF THE TILE.

GENERAL NOTES

1. ALL FLOOR FINISHES MUST BE PROTECTED THROUGHOUT CONSTRUCTION PHASE.
2. CONTRACTOR TO PROVIDE TRANSITION STRIPS AT ALL FLOORING MATERIAL CHANGES AS NEEDED.
3. WHERE ADJACENT FLOORING MATERIALS CREATE DIFFERING HEIGHTS, TRANSITION SLOPE OF LOWER MATERIAL AT A POINT 18" FROM HIGHER MATERIAL TO MATCHING HEIGHTS .
4. ALL INTERIOR AREA STEEL DOOR/WINDOW FRAMES TO BE PAINTED P1 , UNLESS NOTED AS FOLLOWS: 1202A ; 1202B; 1203A; 1204A TO BE PAINTED JPS1.
5. ALL INTERIOR AREA STEEL DOORS TO BE PAINTED P1 , UNLESS NOTED AS FOLLOWS: 1202A; 1202B;1203A; 1204A TO BE PAINTED JPS1
6. ALL SITE ELEMENTS TO BE PAINTED P1, UNLESS NOTED OTHERWISE.
7. ALL EXTERIOR STEEL FRAMES TO BE PAINTED P1, UNLESS NOTED .
8. ALL EXTERIOR STEEL DOORS TO BE PAINTED P1, UNLESS NOTED.
9. REFERENCE SHEETS A811, A821, AND A831 FOR EXTENT OF CORNER GUARDS AND WINDOW SHADES.
10. PROVIDE RUBBER COVE BASE FOR ALL CARPET CONDITIONS, UNLESS NOTED OTHERWISE.
11. PROVIDE RUBBER COVE BASE AT ALL HARD SURFACE FLOOR FINISH CONDITIONS, UNLESS NOTED OTHERWISE.
12. ALL BOTTOM OF DRYWALL BULKHEADS SHOWN ON ARCHITECTURAL CEILING PLANS TO BE PAINTED P3, UNLESS NOTED OTHERWISE.
13. EXTERIOR BLOCK PAINT TO BE PAINTED P9.
14. SUBMIT LAYOUT OF CARPET PATTERNING FOR APPROVAL.
15. SUBMIT LAYOUT OF TILE PATTERNING FOR APPROVAL.
16. REFERENCE SPECIFICATIONS FOR FINISHES AT ELEVATOR, EXCEPT FLOORING TO BE AS SCHEDULED
17. VARY TILE BED DEPTH TO ACHIEVE SMOOTH FINISH SURFACE.
18. ALL INTERIOR EXPOSED STEEL COLUMNS TO BE PAINTED P1 AND STRUCTURAL BRACING.
19. REFERENCE SPECIFICATIONS FOR LEVEL OF FINISH AT ALL EXPOSED STEEL.
20. ENGINEERED STONE TO BE TYPICALLY 2CM THICKNESS. 1 CM THICKNESS ON BACKSPLASHES.
21.AT LOCATIONS WHERE ENGINEERED STONE IS USED AS AN INTERIOR SILL, USE ES3 AS MATERIAL.

FINISH LEGEND

CARPET
CPT1 SHAW CONTRACT
COLLECTION: STEPPIN OUT COLLECTION
STYLE: WELCOME II TILE
COLOR: 31549 CHARCOAL

CPT2 SHAW CONTRACT
COLLECTION: GRADATION TILE 5T339
COLOR: 39597 SLATE
INSTALL: QUARTER TURN

CPT3 SHAW CONTRACT
COLLECTION: GRADATION TILE 5T339
COLOR: 39496 COBALT
INSTALL: QUARTER TURN

CPT4 NOT USED

CPT5 SHAW CONTRACT
COLLECTION: CAMPUS
STYLE: QUAD TILE 5T324
COLOR: INK STEEL 23505
INSTALL: QUARTER TURN

CPT6 SHAW CONTRACT
COLLECTION: 18X36
STYLE: MOTION 59598
COLOR: 95505 MOTION
INSTALL: ASHLAR

CPT7 SHAW CONTRACT
COLLECTION: DYE LAB 5T041
COLOR: 41496 INDIGO
ORIGINAL DYE LAB CLASSIC TILE
INSTALL: MONOLITHIC

CPT8 SHAW CONTRACT
COLLECTION: DYE LAB 5T041
COLOR: 41462 SAXON
INSTALL: MONOLITHIC

CPT9 SHAW CONTRACT
COLLECTION: DYE LAB 5T041
COLOR:41535 HENNA
INSTALL: MONOLITHIC
FOR ALL SHAW PRICING, CONTACT KATHLEEN GRIEF @ #972.207.3818.

ACOUSTIC WRAPPED PANEL
AWP1 HBF TEXTILES
COLLECTION: ZIGGY ZAG 997
COLOR: LIGHT GREY 80
INSTALLATION: QUARTER TURN EACH PANEL
AWP2 HBF TEXTILES
COLLECTION: ZIGGY ZAG 997
COLOR: BLACK 90
INSTALLATION: QUARTER TURN EACH PANEL

AWP3 HBF TEXTILES
COLLECTION: ZIGGY ZAG 997
COLOR: OFF WHITE 11
INSTALLATION: QUARTER TURN EACH PANEL

BUTCHER BLOCK COUNTER
BBC
BURNISHED SCORED BLOCK
BSB

GROUT
G1
G2

RUBBER BASE
RB1 ROPPE
194 BURNT UMBER
WALL BASE

RESILIENT ATHLETIC FLOORING
RAF1 DURASOUND TILE 2.75"
COLOR: MIDNIGHT BLACK

SEALED CONCRETE
SC1

TACKABLE SURFACE
TS

TILE
PT1 CONCEPT SURFACES
SERIES: THE TOWNE
COLOR: GREEN
FINISH: POLISHED
SIZE:
INSTALLATION: VERTICALLY

PT1A CONCEPT SURFACES
SERIES: THE TOWNE
COLOR: GREEN
FINISH: MATTE
SIZE:
INSTALLATION: VERTICALLY

PT2 CONCEPT SURFACES
SERIES: THE TOWNE
COLOR: DARK
FINISH: POLISHED
SIZE:
INSTALLATION: BRICK

PT2A CONCEPT SURFACES
SERIES: THE TOWNE
COLOR: DARK
FINISH: MATTE
SIZE:
INSTALLATION: BRICK

PT3 CONCEPT SURFACES
SERIES: THE TOWNE
COLOR: CORTEN
FINISH: MATTE
SIZE:
INSTALLATION: HORIZONTALLY STACKED
ADD SCHLUTER DECO- AE
FOR ALL CONCEPT SURFACES PRICING , CONTACT MAGGIE CURTIS @#972.386.4900.

PT4 CERAMIC TECHNICS
SERIES: SITTA VEIN STONE
COLOR: WHITE
FINISH: POLISHED
SIZE:
INSTALLATION: HORIZONTALLY STACKED

PT4A CERAMIC TECHNICS
SERIES: SITTA VEIN STONE
COLOR: WHITE
FINISH: NATURAL
SIZE:
INSTALLATION: HORIZONTALLY STACKED

PT5 CERAMIC TECHNICS
SERIES: SITTA VEIN STONE
COLOR: GREY
FINISH: POLISHED
SIZE:
INSTALLATION: HORIZONTALLY STACKED

PT5A CERAMIC TECHNICS
SERIES: SITTA VEIN STONE
COLOR: GREY
FINISH: NATURAL
SIZE:
INSTALLATION: HORIZONTALLY STACKED

PT6 CERAMIC TECHNICS
SERIES: STONEWORKS INDUSTRIAL CORRUGATED METAL
COLOR: RUSTY
SIZE: 4" X 8"

PT7 CERAMIC TECHNICS
SIENNA CLASSIC DESIGN STONES EVO
STYLE: BATTUTO DI LISTELLI
COLOR: CALACATTA RENIOR
SIZE: 12" X 24"
INSTALL: HORIZONTALLY
FOR ALL CERAMIC TECHNICS PRICING, CONTACT SHARON GLIDDEN @ #214.533.4523.

PT8 CERAMIC TECHNICS
STONEWORKS INDUSTRIAL REFLECTIONS
COLOR: OCEAN FORM
SIZE: 8" X 24"

PT8A CERAMIC TECHNICS
STONEWORKS INDUSTRIAL REFLECTIONS
COLOR: OCEAN MOVE
SIZE: 8" X 24"

PT9 DALTILE
KEYSTONES
COLOR: SUEDE GRAY D128
SIZE: 2" X 2"

CT1 INTERCERAMIC TILE
COLLECTION: IC BRITES
COLOR: ULTRA WHITE
SIZE: 4" X 4"

CT2 INTERCERAMIC TILE
COLLECTION: WALL TILE COLLECTION
COLOR: LUXE GREY
SIZE: 4" X 4"

QUARRY TILE
QT INTERCERAMIC
STYLE: QUARRY BASICS
COLOR: BUCKSKIN UNGLAZED
SIZE: 4" X 8"

STAINLESS STEEL
SS

ALUMINUM
AL

STEEL
ST

MIRROR
MR

ANTI STATIC FLOORING
ASF1 JULE ANTISTATIC STATIC PULSE 0012V
STYLE: EVEREST SUMMIT SERIES
COLOR: MCKINLEY

LUXURY VINYL TILE
LVT1 SHAW CONTRACT
STYLE: REFRAME 4004V
COLOR: CONVERSION 04530

LVT2 SHAW CONTRACT
STYLE: COMPOUND V2
COLOR: 77504 BASE

SHEET VINYL
SV1 SHAW CONTRACT
STYLE: VITALITY
COLOR: RESTORE WEL5204

POLISHED CONCRETE
PC

CORNER GUARD
CG1 ACROVYN #187 TAN BARK

WIRE MESH
M1 GAGE CORPORATION ST. PAUL GW909 SS/CA
STAINLESS STEEL/ COPPER

LAMINATE WALL PANELS
MP1 = L1 WILSONART FLORENCE WALNUT 7993

WALL CARPET
WC1 TRI KES SILENCE ASIL-02 WARM GRAY

WALL PROTECTION
WP1 ACROVYN #410 BRUSHED SILVER
WP2 ACROVYN #378 BRUSHED NICKEL

PLASTIC LAMINATE
L1 WILSONART FLORENCE WALNUT 7993
L2 WILSONART PORTICO TEAK 8210K
L3 NEVAMAR HLT 001T BASIC BLACK HAUTELINK

ENGINEERED STONE MATERIAL
ES1 WILSONART QUARTZ
GREY LAKE Q1009

ES2 WILSONART QUARTZ
ARLINGTON Q1005

ES3 WILSONART QUARTZ
SOHO Q1019

VINYL WALL COVERING
VWC1 TRI KES SOURCE ONE
COLLECTION: TRAVELER
COLOR: DEVON 2 VTRA- 11

VWC2 TRI KES SOURCE ONE
COLLECTION: TRAVELER
COLOR: FEZ 2 VTRA-12

VWC3 TRI KES SOURCE ONE
COLLECTION: TRAVELER
COLOR: RED KING 2 VTRA- 02

PAINT
ALL PAINTS TO BE SHERWIN WILLIMAS
P1 SW7046 ANONYMOUS (STEEL)
P2 SW6167 GARDEN GATE
P3 SW7005 PURE WHITE
P4 SW6055 FIERY BROWN
P5 SW7044 AMAZING GRAY(TYPICAL)
P6 SW7674 PEPPERCORN
P7 SW6235 FOGGY DAY
P8 SW6508 SECURE BLUE
P9 CHINA DOLL SW7517

JAIL PAINT SYSTEM
JPS "X"

Architect: Brinkley Sargent Wiginton Architects (972) 960-9970
Landscape: Kendall Landscape Architecture (214) 739-3226
Structural: L.A. Fuess Partners, Inc (214) 593-1118
MEP: M-E Engineers (214) 741-1589
Civil: KSA Engineers, Inc (903) 236-7700
Technology: M-E Engineers (303) 421-6656

BRINKLEY SARGENT WIGINTON ARCHITECTS

LONGVIEW POLICE DEPARTMENT

518 W. SOUTH ST. LONGVIEW, TEXAS 75601

HISTORY

#	DATE	DESCRIPTION

REGISTERED ARCHITECT HAROLD E. SARGENT 9941 STATE OF TEXAS
08/19/2020

LEVEL 1 - FINISH SCHEDULE, NOTES & LEGEND

21719
08/19/2020
A801

BID ISSUE

8/18/2020 4:17:49 PM
D:\Revit Locals\LPD_CENTRAL_A19_bcocherer_08-18-2020.rvt

© 2020 Brinkley Sargent Wiginton Architects, Inc.

ROOM FINISH SCHEDULE - LEVEL 2

REV.	NUMBER	ROOM	FLOOR	BASE	WALL N	WALL S	WALL E	WALL W	CEILING	FINISH NOTES
	2001	2ND FLOOR LOBBY	PT2	--	AL/GL/ P1	PT4/ PT4A/ PT5/ PT5A/ PT6	PT4/ PT4A/ PT5/ PT5A/ PT6	PT4/PT4A/PT5/ PT5A/ PT6	P3/ P1	1, 2, 3, 14, 15, 25
	2002	VESTIBULE	PT2	PT5A	P5	PT5	P5	P5	P3	1,2,13,27
	2003	CATERING/SERVING	PT2	PT5A	P5	P5/ PT7/	P5	P5	P3	1,2,13, 27,17
	2004	TRAINING / COMMUNITY ROOM	CPT5 / CPT9	PT5A	PT5 / AWP1/ AWP2/ PT5A	PT5/ /AWP1/ AWP2	PT5/ AWP1/ AWP2	PT5/ AWP1/ AWP2/ WD1/ WD2	P3	1,2,3,7,13,14,
	2005	STORAGE	LVT1	RB1	P5	P5	P5	P5	P5	
	2007	FOUNTAIN								
	2008	MEN'S	PT2A	PT2A	PT7/ PT4	PT2/ PT4	PT4	PT4	P3	1,2,13,14
	2009	WOMEN'S	PT2A	PT2A	PT7/ PT4	PT7/ PT4	PT4	PT4	P3	1,2,13,14
	2010	COFFEE								
	2011	CORRIDOR	LVT1	RB1	P5	P5	P5	P5		
	2012	OFFICERS	CPT5	RB1	P5	P5/ /GL/ AL	P5	P5		2
	2014	FILES/STOR.	LVT1	RB1	P5	P5	P5	P5		
	2015	CORRIDOR	LVT1	RB1	P5	P5/ ST/ GL	P5	P5	P3	2,3
	2016	INTERVIEW	CPT5	RB1	WC	P5	WC	WC		
	2017	CONFERENCE (4)	CPT5	RB1	WC	P5	WC	WC		
	2018	SERGEANT	CPT5	RB1	GL/ST	P5	P5	P5		
	2019	TRAINING SGT	CPT5	RB1	GL/ST	P5	P5	P5		
	2021	VESTIBULE	LVT1	RB1	P5	P5	P5	P5		
	2022	TRAINING/SIMULATOR	CPT5	RB1	P5	P5	P5	P5		
	2101	RECORDS ARCHIVES	LVT1	RB1	P5	--	P5	P5		
	2102	RECEPTION	CPT5	RB1	VWC1	VWC1	VWC1	GL/ST		2
	2103	ADMIN. ASSIST.	CPT5	RB1	VWC1	VWC1/ P5	VWC1	GL/ST/ P5		2
	2104	CORRIDOR	CPT5	RB1	VWC1	VWC1	VWC1	VWC1		
	2105	LIEUTENANTS	CPT5	RB1	P5	P5	P8	P5		
	2106	LIEUTENANTS	CPT5	RB1	P5	P5	P8	P5		
	2107	LIEUTENANTS	CPT5	RB1	P5	P5	P5	P8		
	2108	CONFERENCE	CPT2	RB1	GL/ ST/ P5	P8	P5	P5		
	2109	CORRIDOR	PT5A	PT5A	ST/ GL/ PT4A/ P5	PT4A/ P5	PT4A/ P5	PT4A/ P5		1,2,14, 26
	2111	JANITOR	SC1	CT1	P5/CT1	P5	P5	P5/CT1		1,22
	2112	SERGEANT (4)	CPT5	RB1	P5	P5/ GL/ ST	VWC3	P5		
	2113	BRIEFING	CPT5	PT5A/ RB1	P5	P5	PT4A/ P5	PT4A/ P5	P3	1,14,26,5
	2115	PLANNING RESEARCH	CPT5	RB1	P5	P5/ GL/ ST	P5	VWC3	P3	3
	2116	PLANNING / RESEARCH SERGEANT	CPT5	RB1	ST/ GL/ P5	ST/ GL/ P5	P5	VWC3		
	2117	REPORT WRITING	PT5A/ PT3	PT3/ PT6/ PT5A	PT6/ AWP1	ST/ GL/ AWP1	ST/GL/PT4A/ P5/AWP1	ST/GL/ PT4A/ P5/ AWP1	P3	1,2, 3, 14, 26
	2118	SPECIAL OPERATIONS LT.	CPT5	RB1	P5	P5	P5/ ST/ GL	P8		
	2119	ELEVATOR DROP	PT5A	PT5A	--	PT6	PT4A/ P5	PT4A/ P5		1,14, 26
	2120	CORRIDOR	PT5A	PT5A	PT4A/ P5	PT4A/ P5	--	P5		1,14, 26
	2121	CORRIDOR	LVT1	RB1	P5/ ST/ GL	P5	P5	P5		1,14, 26
	2124	ELEC. CLOSET	SC1	RB1	P5	P5	P5	P5		
	2125	IT/DATA CLOSET	SC1	RB1	P5	P5	P5	P5		
	2126	SRO/SI/PRI SERGEANTS	CPT5	RB1	P5	GL/ ST	P5	P5		
	2127	COMM. SERVICES / PAR STORAGE	LVT1	RB1	P5	P5	P5	P5		
	2128	GENERAL STORAGE	LVT1	RB1	--	P5	P5	P5		
	2129	QUARTERMASTER	LVT1	RB1	--	P5/ST/ GL	P5	P5		
	2131	QUARTERMASTER STOR.	LVT1	RB1	P5	P5	P5	P5		2
	2132	DRESSING ROOM	LVT1	RB1	P5	P5	P5	P5		
	2133	CORRIDOR	PT5A	PT5A	PT4A/ST/GL/P5	PT4A/ ST/ GL/ P5/ WP1	P5	P5		1,2,14, 26
	2134	CORRIDOR	PT5A	PT5A	AT/ GL	PT4A/P5	PT4A/ P5	--		1,14, 26
	2135	TRAFFIC UNIT	CPT5	RB1	P5	P5/ ST/ GL	P5	P5		
	2136	TRAFFIC SERGEANT	CPT5	RB1	P5	GL/ ST	GL/ST	P5		
	2137	STORAGE	LVT1	RB1	P5	P5	P5	P5		2
	2138	BREAKROOM/VENDING	PT4A/ PT3	PT4A	P5	GL/ST	PT7/ P5	GL/ST	P3	1,2,3,13,27,17
	2139	JUVENILE CONF. (4)	CPT5	RB1	P5	P5	P5	P5/GL/ ST		
	2141	SERGEANT (4)	CPT5	RB1	P5	P5	P5	VWC3		
	2142	SERGEANT (4)	CPT5	RB1	P5	P5	P5	VWC3		
	2143	EQUIP. DISTRIBUTION/STOR.	LVT1	RB1	P5	P5	P5	P5		2
	2144	SPECIAL INVESTIGATIONS	CPT2/ CPT5	RB1	P5/ P6	P5/GL/ ST	P5/ P6	P5	P3	1,3
	2145	SERGEANT (2)	CPT5	RB1	GL/ST/ P5	P5	P5	VWC3		
	2201	SOUND VEST.	CPT5	PT4A	PT4A/ P5	PT4A/ P5	PT4A/ P5	PT4A/ P5	P3	1,2,3,13, 14, 26
	2202	SUPPLY	CARPET	RB	P1		P1	P1		
	2203	QUIET RM	CPT5	RB1	P5	WP1	P5	P5		
	2204	LACTATION/QUIET RM	CPT5	RB1	P5	WP1	P5	P5		
	2206	CORR.	PT5A	PT4A	PT4A/ P5	PT4A/ P5	PT4A/ P5	PT4A/ P5	P3	1,2,3,13,14,26
	2207	MEN'S	PT5A	PT4A	PT4	PT4	PT8/ PT4	PT8A/ PT4	P3	1,2,13,14
	2208	VESTIBULE	PT5A	PT4A	PT4	PT4	PT4	PT8A	P3	1,2,13,14
	2209	WOMEN'S	PT5A	PT4A	PT4	PT4	PT4	PT8	P3	1,2,13,14
	2211	ACCESSIBLE SHOWER	PT9	CT1/ PT8	PT8	CT1	CT1/ PT8A	CT1	CT1	1,2,14
	2212	LOCKER CIRC.	PT5A	PT4A	PT4A/ P5	PT4A / P5	P5	PT4A/ P5	P3	1,2,3,13, 14, 26
	2213	LOCKER ROOM	CPT5	PT4A	P5/ PT4A	P5/ PT4A	--	--	P3	1,2,3,13,14,26
	2214	LOCKER CIRC.	CPT5	PT4A	P5	P5	PT4A/ P5	P5	P3	1,2,3,13,14,26
	2215	EXERCISE	RAF1	WP1/ WP2/ PT6	WP1/ AL/ GL/ P6	WP2/ PT6/ P6	WP1/ PT6/ P6	WP1/ PT6	P6	1,2,3,4,14,23
	2217	DRESSING	CPT5	RB1	P5	P5	P5	P5	P3	
	2218	DRESSING	CPT5	RB1	P5	P5	P5	P5	P3	
	2219	DRESSING	CPT5	RB1	P5	P5	P5	P5	P3	
	2221	DRESSING	CPT5	RB1	P5	P5	P5	P5	P3	
	2222	ACCESSIBLE DRESSING	CPT5	RB1	P5	P5	P5	P5	P3	
	2223	DRESSING	CPT5	RB1	P5	P5	P5	P5	P3	
	2224	TOILET/SHOWER	PT9	CT1/ PT8	PT8	PT8A/ CT1	CT1	CT1	CT1	1,2,14
	2225	UTILITY ROOM	PT9	CT1	CT1	CT1	CT1	CT1		2
	2226	SHOWER	PT9	CT1/PT8	PT8A/CT1	CT1	CT1	PT8/ CT1	CT1	1,2,14
	2227	SHOWER	PT9	CT1/ PT8	PT8A/CT1	CT1	CT1	PT8/ CT1	CT1	1,2,14
	2228	ACCESSIBLE SHOWER	PT9	CT1/PT8	CT1	CT1/PT8A	CT1	PT8/ CT1	CT1	1,2,14
	2229	ACCESSIBLE SHOWER	PT9	CT1/PT8	PT8A/CT1	CT1	CT1	PT8/ CT1	CT1	1,2,14
	2231	VESTIBULE	PT5A	PT4A	PT4A/P5	PT4A/ P5	PT4A/ P5	PT4A/ P5	P3	1,13,14,26

FINISH NOTES

1. REFERENCE FINISH PLANS A811, A821, AND A831 FOR EXTENT / LAYOUT OF FINISHES.
2. REFERENCE INTERIOR ELEVATION SHEETS A901- A911 FOR EXTENT OF FINISHES/ MILLWORK
3. REFERENCE REFLECTED CEILING PLAN SHEETS A311- A332 FOR EXTENT/LAYOUT OF FINISHES.
4. ALL EXPOSED ELEMENTS AND PERIMETER WALL FROM FINISH CEILING TO STRUCTURE TO BE PAINTED P6.
5. EXPOSED STEEL BRACES TO BE PAINTED P6.
6. WALK IN COOLER IS A SPECIFIED ITEM TO BE BUILT IN PLACE.
7. REFERENCE MEP, TECHNOLOGY, EAV, AND SIGNAGE DRAWINGS FOR LOCATIONS OF ALL DEVICES IN FABRIC WALLS WHICH WILL REQUIRE BLOCKING TO PREVENT FABRIC FROM PUCKERING.
8. STAIR ST-01 (PUBLIC LOBBY)
   A. STAIR TREADS, PLATFORMS, AND RISERS TO BE PT2
   B. STRINGERS TO BE PAINTED P1
   C. RAILINGS FINISHES TO BE REFERENCED IN FINISH NOTE 15.
   D. STAIR NOSINGS TO BE SCHLUTER TREP-FL- EB
   E. GYPSUM BOARD CEILINGS UNDER STAIR SOFFITS TO BE PAINTED P3.
9. STAIR ST-02 (POLICE STAFF)
   A. STAIR TREADS, PLATFORMS, AND RISERS TO BE PT5A
   B. STRINGERS TO BE PAINTED P1
   C. RAILINGS FINISHES TO BE REFERENCED IN FINISH NOTE 15.
   D. STAIR NOSINGS TO BE SCHLUTER TREP-TAP
   E. GYPSUM BOARD CEILINGS UNDER STAIR SOFFITS TO BE PAINTED P3.
10. STAIR ST-03 (EXIT STAIRWELL)
   A. STAIR TREADS, PLATFORMS, AND RISERS TO BE SEALED CONCRETE (SC1)
   B. STRINGERS TO BE PAINTED P1.
   C. RAILINGS TO BE PAINTED P1.
11. PAINT ALL STEEL DOORS AND STEEL FRAMES JPS1.
12. PROVIDE SEAMLESS FLOORING AND INTEGRAL 4" BASE. PROVIDE SCHLUTER JOLLY- PG TO CAP BASE.
13 TILE BASE TO BE 8" HIGH.
14.TILE WALLS TO HAVE SCHLUTER TRIM AS FOLLOWS:
   A. TILE AT STEEL FRAMES TO BE JOLLY-AE
   B.FLOOR TO BASE TRANSITION TO BE DILEX-AHK
   C.OUTSIDE CORNERS TO BE RONDEC-AE.
15.REFERENCE INTERIOR ELEVATION SHEET 1/ A841 FOR EXTENT OF RAILING PAINT COLORS P1, P2 AND P4 WITH ALUMINUM PIPE RAIL AND PERFORATED ALUMINUM PANELS.
16. QT BASE TO BE 8" TALL . PT5A BASE SOLELY AT STAIR PLATFORM WHERE PT AND ALUMINUM WAINSCOT OCCURS.
17. 4" TILE BASE AT MILLWORK.
18. AWP 3 TO BE INSTALLED 8'-02" A.F.F. TO 11'-0" CEILING ABOVE (REFERENCE CEILING PLANS)
19. INSTALL SV1 FLOOR FINISH ON ROLLING FILE PLATFORM AFTER PLATFORM INSTALLATION. INSTALL POLISHED CONCRETE BELOW PLATFORM.
20. INSTALL SCHLUTER SCHIENE- AE (2MM) AT ALL HORIZONTAL JOINTS BETWEEN PT3.
21.NO PAINT ON EXPOSED GALVANIZED STRUCTURE AND METAL DECK.
22. INSTALL CT1 TO FULL EXTENT OF JANITOR SINK TO (CORNER TO CORNER OF SINK) ON BOTH WALLS TO A HEIGHT OF 4'-0" A.F.F.
23. NOT USED
24. CEILING SKYLIGHTS TO BE PAINTED P3. WOOD TRIM ADJACENT TO FIRE CURTAIN BASE PLATE TO BE P1.
25. WOOD TRIM AT CEILING TO BE PAINTED P1.
26. REFERENCE DETAIL 9/A925 FOR PT4A WAINSCOT TILE 56" TALL WITH FRYE REGLET DCS-625-50 CONTINUOUS RUN AND DRYWALL ABOVE PAINTED P5.
27. TILE BASE WITH FLOOR TO BASE TRANSITION DILEX-AHK AND JOLLY- AE CONTINUOUS AT TOP OF THE TILE.

GENERAL NOTES

1. ALL FLOOR FINISHES MUST BE PROTECTED THROUGHOUT CONSTRUCTION PHASE.
2. CONTRACTOR TO PROVIDE TRANSITION STRIPS AT ALL FLOORING MATERIAL CHANGES AS NEEDED.
3. WHERE ADJACENT FLOORING MATERIALS CREATE DIFFERING HEIGHTS, TRANSITION SLOPE OF LOWER MATERIAL AT A POINT 18" FROM HIGHER MATERIAL TO MATCHING HEIGHTS .
4. ALL INTERIOR AREA STEEL DOOR/WINDOW FRAMES TO BE PAINTED P1 , UNLESS NOTED AS FOLLOWS: 1202A ; 1202B; 1203A; 1204A TO BE PAINTED JPS1.
5. ALL INTERIOR AREA STEEL DOORS TO BE PAINTED P1 , UNLESS NOTED AS FOLLOWS: 1202A; 1202B;1203A; 1204A TO BE PAINTED JPS1
6. ALL SITE ELEMENTS TO BE PAINTED P1, UNLESS NOTED OTHERWISE.
7. ALL EXTERIOR STEEL FRAMES TO BE PAINTED P1, UNLESS NOTED .
8. ALL EXTERIOR STEEL DOORS TO BE PAINTED P1, UNLESS NOTED.
9. REFERENCE SHEETS A811, A821, AND A831 FOR EXTENT OF CORNER GUARDS AND WINDOW SHADES.
10. PROVIDE RUBBER COVE BASE FOR ALL CARPET CONDITIONS, UNLESS NOTED OTHERWISE.
11. PROVIDE RUBBER COVE BASE AT ALL HARD SURFACE FLOOR FINISH CONDITIONS, UNLESS NOTED OTHERWISE.
12. ALL BOTTOM OF DRYWALL BULKHEADS SHOWN ON ARCHITECTURAL CEILING PLANS TO BE PAINTED P3, UNLESS NOTED OTHERWISE.
13. EXTERIOR BLOCK PAINT TO BE PAINTED P9.
14. SUBMIT LAYOUT OF CARPET PATTERNING FOR APPROVAL.
15. SUBMIT LAYOUT OF TILE PATTERNING FOR APPROVAL.
16. REFERENCE SPECIFICATIONS FOR FINISHES AT ELEVATOR, EXCEPT FLOORING TO BE AS SCHEDULED
17. VARY TILE BED DEPTH TO ACHIEVE SMOOTH FINISH SURFACE.
18. ALL INTERIOR EXPOSED STEEL COLUMNS TO BE PAINTED P1 AND STRUCTURAL BRACING.
19. REFERENCE SPECIFICATIONS FOR LEVEL OF FINISH AT ALL EXPOSED STEEL.
20. ENGINEERED STONE TO BE TYPICALLY 2CM THICKNESS. 1 CM THICKNESS ON BACKSPLASHES.
21.AT LOCATIONS WHERE ENGINEERED STONE IS USED AS AN INTERIOR SILL, USE ES3 AS MATERIAL.

FINISH LEGEND

CARPET
CPT1 SHAW CONTRACT
COLLECTION: STEPPIN OUT COLLECTION
STYLE: WELCOME II TILE
COLOR: 31549 CHARCOAL

CPT2 SHAW CONTRACT
COLLECTION: GRADATION TILE 5T339
COLOR: 39597 SLATE
INSTALL: QUARTER TURN

CPT3 SHAW CONTRACT
COLLECTION: GRADATION TILE 5T339
COLOR: 39496 COBALT
INSTALL: QUARTER TURN

CPT4 NOT USED

CPT5 SHAW CONTRACT
COLLECTION: CAMPUS
STYLE: QUAD TILE 5T324
COLOR: INK STEEL 23505
INSTALL: QUARTER TURN

CPT6 SHAW CONTRACT
COLLECTION: 18X36
STYLE: MOTION 59598
COLOR: 95505 MOTION
INSTALL: ASHLAR

CPT7 SHAW CONTRACT
COLLECTION: DYE LAB 5T041
COLOR: 41496 INDIGO
ORIGINAL DYE LAB CLASSIC TILE
INSTALL: MONOLITHIC

CPT8 SHAW CONTRACT
COLLECTION: DYE LAB 5T041
COLOR: 41462 SAXON
INSTALL: MONOLITHIC

CPT9 SHAW CONTRACT
COLLECTION: DYE LAB 5T041
COLOR:41535 HENNA
INSTALL: MONOLITHIC
FOR ALL SHAW PRICING, CONTACT KATHLEEN GRIEF @ #972.207.3818.

ACOUSTIC WRAPPED PANEL
AWP1 HBF TEXTILES
COLLECTION: ZIGGY ZAG 997
COLOR: LIGHT GREY 80
INSTALLATION: QUARTER TURN EACH PANEL
AWP2 HBF TEXTILES
COLLECTION: ZIGGY ZAG 997
COLOR: BLACK 90
INSTALLATION: QUARTER TURN EACH PANEL

AWP3 HBF TEXTILES
COLLECTION: ZIGGY ZAG 997
COLOR: OFF WHITE 11
INSTALLATION: QUARTER TURN EACH PANEL

BUTCHER BLOCK COUNTER
BBC
BURNISHED SCORED BLOCK
BSB

GROUT
G1
G2

RUBBER BASE
RB1 ROPPE
194 BURNT UMBER
WALL BASE

RESILIENT ATHLETIC FLOORING
RAF1 DURASOUND TILE 2.75"
COLOR: MIDNIGHT BLACK

SEALED CONCRETE
SC1

TACKABLE SURFACE
TS

TILE
PT1 CONCEPT SURFACES
SERIES: THE TOWNE
COLOR: GREEN
FINISH: POLISHED
SIZE:
INSTALLATION: VERTICALLY

PT1A CONCEPT SURFACES
SERIES: THE TOWNE
COLOR: GREEN
FINISH: MATTE
SIZE:
INSTALLATION: VERTICALLY

PT2 CONCEPT SURFACES
SERIES: THE TOWNE
COLOR: DARK
FINISH: POLISHED
SIZE:
INSTALLATION: BRICK

PT2A CONCEPT SURFACES
SERIES: THE TOWNE
COLOR: DARK
FINISH: MATTE
SIZE:
INSTALLATION: BRICK

PT3 CONCEPT SURFACES
SERIES: THE TOWNE
COLOR: CORTEN
FINISH: MATTE
SIZE:
INSTALLATION: HORIZONTALLY STACKED
ADD SCHLUTER DECO- AE
FOR ALL CONCEPT SURFACES PRICING , CONTACT MAGGIE CURTIS @#972.386.4900.

PT4 CERAMIC TECHNICS
SERIES: SITTA VEIN STONE
COLOR: WHITE
FINISH: POLISHED
SIZE:
INSTALLATION: HORIZONTALLY STACKED

PT4A CERAMIC TECHNICS
SERIES: SITTA VEIN STONE
COLOR: WHITE
FINISH: NATURAL
SIZE:
INSTALLATION: HORIZONTALLY STACKED

PT5 CERAMIC TECHNICS
SERIES: SITTA VEIN STONE
COLOR: GREY
FINISH: POLISHED
SIZE:
INSTALLATION: HORIZONTALLY STACKED

PT5A CERAMIC TECHNICS
SERIES: SITTA VEIN STONE
COLOR: GREY
FINISH: NATURAL
SIZE:
INSTALLATION: HORIZONTALLY STACKED

PT6 CERAMIC TECHNICS
SERIES: STONEWORKS INDUSTRIAL CORRUGATED METAL
COLOR: RUSTY
SIZE: 4" X 8"

PT7 CERAMIC TECHNICS
SIENNA CLASSIC DESIGN STONES EVO
STYLE: BATTUTO DI LISTELLI
COLOR: CALACATTA RENIOR
SIZE: 12" X 24"
INSTALL: HORIZONTALLY
FOR ALL CERAMIC TECHNICS PRICING, CONTACT SHARON GLIDDEN @ #214.533.4523.

PT8 CERAMIC TECHNICS
STONEWORKS INDUSTRIAL REFLECTIONS
COLOR: OCEAN FORM
SIZE: 8" X 24"

PT8A CERAMIC TECHNICS
STONEWORKS INDUSTRIAL REFLECTIONS
COLOR: OCEAN MOVE
SIZE: 8" X 24"

PT9 DALTILE
KEYSTONES
COLOR: SUEDE GRAY D128
SIZE: 2" X 2"

CT1 INTERCERAMIC TILE
COLLECTION: IC BRITES
COLOR: ULTRA WHITE
SIZE: 4" X 4"

CT2 INTERCERAMIC TILE
COLLECTION: WALL TILE COLLECTION
COLOR: LUXE GREY
SIZE: 4" X 4"

QUARRY TILE
QT INTERCERAMIC
STYLE: QUARRY BASICS
COLOR: BUCKSKIN UNGLAZED
SIZE: 4" X 8"

STAINLESS STEEL
SS

ALUMINUM
AL

STEEL
ST

MIRROR
MR

ANTI STATIC FLOORING
ASF1 JULE ANTISTATIC STATIC PULSE 0012V
STYLE: EVEREST SUMMIT SERIES
COLOR: MCKINLEY

LUXURY VINYL TILE
LVT1 SHAW CONTRACT
STYLE: REFRAME 4004V
COLOR: CONVERSION 04530

LVT2 SHAW CONTRACT
STYLE: COMPOUND V2
COLOR: 77504 BASE

SHEET VINYL
SV1 SHAW CONTRACT
STYLE: VITALITY
COLOR: RESTORE WEL5204

POLISHED CONCRETE
PC

CORNER GUARD
CG1 ACROVYN #187 TAN BARK

WIRE MESH
M1 GAGE CORPORATION ST. PAUL GW909 SS/CA
STAINLESS STEEL/ COPPER

LAMINATE WALL PANELS
MP1 = L1 WILSONART FLORENCE WALNUT 7993

WALL CARPET
WC1 TRI KES SILENCE ASIL-02 WARM GRAY

WALL PROTECTION
WP1 ACROVYN #410 BRUSHED SILVER
WP2 ACROVYN #378 BRUSHED NICKEL

PLASTIC LAMINATE
L1 WILSONART FLORENCE WALNUT 7993
L2 WILSONART PORTICO TEAK 8210K
L3 NEVAMAR HLT 001T BASIC BLACK HAUTELINK

ENGINEERED STONE MATERIAL
ES1 WILSONART QUARTZ
GREY LAKE Q1009

ES2 WILSONART QUARTZ
ARLINGTON Q1005

ES3 WILSONART QUARTZ
SOHO Q1019

VINYL WALL COVERING
VWC1 TRI KES SOURCE ONE
COLLECTION: TRAVELER
COLOR: DEVON 2 VTRA- 11

VWC2 TRI KES SOURCE ONE
COLLECTION: TRAVELER
COLOR: FEZ 2 VTRA-12

VWC3 TRI KES SOURCE ONE
COLLECTION: TRAVELER
COLOR: RED KING 2 VTRA- 02

PAINT
ALL PAINTS TO BE SHERWIN WILLIMAS
P1 SW7046 ANONYMOUS (STEEL)
P2 SW6167 GARDEN GATE
P3 SW7005 PURE WHITE
P4 SW6055 FIERY BROWN
P5 SW7044 AMAZING GRAY(TYPICAL)
P6 SW7674 PEPPERCORN
P7 SW6235 FOGGY DAY
P8 SW6508 SECURE BLUE
P9 CHINA DOLL SW7517

JAIL PAINT SYSTEM
JPS "X"

BRINKLEY SARGENT WIGINTON ARCHITECTS

Architect: Brinkley Sargent Wiginton Architects (972) 960-9970
Landscape: Kendall Landscape Architecture (214) 739-3226
Structural: L.A. Fuess Partners, Inc (214) 593-1118
MEP: M-E Engineers (214) 741-1589
Civil: KSA Engineers, Inc (903) 236-7700
Technology: M-E Engineers (303) 421-6656

LONGVIEW POLICE DEPARTMENT

518 W. SOUTH ST. LONGVIEW, TEXAS 75601

HISTORY

#	DATE	DESCRIPTION

REGISTERED ARCHITECT HAROLD E. SARGENT 9941 STATE OF TEXAS
08/19/2020

LEVEL 2 - FINISH SCHEDULE, NOTES & LEGEND

21719
08/19/2020
A802

BID ISSUE

8/18/2020 4:18:31 PM
D:\Revit Locals\LPD_CENTRAL_A19_bcocherer_08-18-2020.rvt

© 2020 Brinkley Sargent Wiginton Architects, Inc.

ROOM FINISH SCHEDULE - LEVEL 3/PENTHOUSE										
REV.	NUMBER	ROOM	FLOOR	BASE	WALL				CEILING	FINISH NOTES
					N	S	E	W		
	3001	OVERLOOK	PT2	--	AL/ GL/ P1	PT4/PT4A/ PT5/ PT5A/ PT6	PT4/ PT4A/ PT5/ PT5A/ PT6	PT4/ PT4A/ PT5/ PT5A/ PT6	P1/ P3	1,2,3,14, 15, 25
	3002	RECEPTION / WAITING	CPT7	RB1	VWC2	VWC2	GL/ST	VWC2		2
	3003	CORRIDOR	CPT2	RB1	--	--	P5	VWC3		
	3004	COFFEE	PT5A	PT5A	P5	P5	P5	P5		2, 17
	3005	OFFICE MANAGER	CPT8	RB1	P5/ GL/ ST	VWC3	P5	P5		
	3006	ADMIN. ASSIST.	CPT7	RB1	VWC2	P5	GL/ST/P5	P5		2
	3007	CORRIDOR	CPT2	RB1	P5	VWC3/GL/ST	--	--		
	3008	CONFERENCE	CPT7	RB1	P5	VWC3	VWC3/ ST/ GL	VWC3		2
	3009	EXEC. ASSIST.	CPT8	RB1	P5/ GL/ST	VWC3	P5	P5		
	3011	CORRIDOR	CPT2	RB1	--	--	VWC3/ GL/ST	P5		
	3012	POLICE CHIEF	CPT7	RB1	P5 /GL/ AL	VWC1	VWC1	ST/ AL/ GL		
	3013	ASSISTANT CHIEF	CPT7	RB1	VWC1	VWC1	VWC1	ST/ AL// GL/ VWC1		
	3014	WORK/COPY	PT5A	PT5A	P5	P5	P5	P5		2, 17
	3015	WOMENS	PT5A	PT5A	CT1	PT8/ PT8A	CT1	CT1	P3	1,2,
	3016	PERSONNEL FILES	LVT1	RB1	P5	P5	P5	P5		
	3017	MENS	PT5A	PT5A	PT8/ PT8A	CT1	CT1	CT1	P3	1,2
	3018	ADMIN. SERGEANT	CPT8	RB1	P5	P5	P5	ST/GL		
	3019	CORRIDOR	CPT2	RB1	P5	P5	--	P5	P3	
	3021	CENTRAL SUPPLY	LVT2	RB1	P5	P5	P5	P5		
	3022	CORRIDOR	CPT2	RB1	VWC3/ P5	P5/ GL/ST	P5	P5		1
	3023	ASSIST. CHIEF	CPT7	RB1	VWC1	P5	VWC1	VWC1		
	3024	CAPTAIN	CPT7	RB1	GL/ ST	P5	VWC3	VWC3		
	3025	CAPTAIN	CPT7	RB1	GL/ ST	P5	VWC3	VWC3		
	3026	SUPPORT SERVICES LT.	CPT7	RB1	GL/ ST	P5	VWC3	VWC3		
	3027	CAPTAIN	CPT7	RB1	GL/ST	P5	VWC3	VWC3		
	3028	I.A. LIEUTENANT	CPT8	RB1	P6	P5	P5	P5		
	3029	I.A. LIEUTENANT	CPT8	RB1	P5	P5	P5	P6		
	3031	I.A. FILES	LVT1	RB1	P5	P5	P5	P5		
	3032	CONF. (4) / INTERVIEW	CPT8	RB1	WC	WC	WC	WC		
	3101	CORRIDOR	CPT3	RB1	P5/PT6	P5	P5	P5		1
	3102	RECEPTION	LVT1	RB1	P5	P5	P5	P5		2
	3103	SUSPECT WAITING	LVT2	RB1	P5	WP2	P5/WP2	WP2	P3	1,2
	3104	INTERROGATION (3)	CPT6	RB1	WC	WC	WC	WC		
	3105	INTERROGATION (3)	CPT6	RB1	WC	WC	WC	WC		
	3106	TOILET	SV	SV	JPS5	JPS5	JPS5	JPS5	P3	12
	3107	P.I.O. / SOCIAL MEDIA	CPT3	RB1	P5	P5	P5	P5		
	3108	WOMEN'S	PT5A	PT5A	PT4	PT4	PT5/ PT8A	PT4	P3	1,2,13, 14
	3109	MEN'S	PT5A	PT5A	PT4	PT4	PT8A/ PT4	PT5/ PT4	P3	1,2,13,14
	3111	CORRIDOR	CPT3	RB1	P5	--	P5	P5		
	3114	CORRIDOR	CPT2/ CPT3	RB1	P5	P5	--	P5		1
	3115	ELECTRICAL CLOSET	SC1	RB1	P5	P5	P5	P5		
	3116	IT/DATA CLOSET	SC1	RB1	P5	P5	P5	P5		
	3118	JANITOR	SC1	RB1/ PT1	P1/ CT1	P1	P1	P1/ CT1		
	3121	DETECTIVES	CPT2/ CPT3	RB1	P5	P5	--	P8	P3	1,3,15
	3122	ELEVATOR DROP	CPT2/CPT3	PT	--	PT6	PT4A/P5	PT4A/P5		1,3,14
	3123	CORRIDOR	CPT2/ CPT3	RB1/PT5A	--	PT4A/ P5	P5	--	P3	1,3, 15
	3124	DETECTIVES	CPT2/ /CPT3	RB1	--	P5	P5	--	P3	1, 3, 15
	3127	DETECTIVES	CPT3	RB1	P5	P5	P5	P5		
	3128	SERGEANT	CPT2	RB1	P5	P5	P5	P5		
	3129	STORAGE	LVT1	RB1	P5	P5	P5	P5		
	3130	COFFEE	PT2A	PT2A	P5	P5	P5	--	P3	2,3,17
	3131	COPY/WORK/COFFEE	LVT1	RB1	P5	P5	P5	P5		2
	3132	EQUIPMENT ROOM	LVT1	RB1	P5	P5	P5	P5		
	3133	EVIDENCE STORAGE	ASF	RB1	P5	P5	P5	P5		
	3134	CYBER LAB RECEIVING	ASF	RB1	P5	P5	P5	P5		2
	3135	TECH. INVESTIGATORS/CYBER LAB	ASF	RB1	P5	P5	P5	P5	P3	2, 3
	3136	FORENSICS I.T.	ASF	RB1	P5	P5	P5	P5		
	3137	SOLDER WORKSTATION	ASF	RB1	P5	P5	P5	P5		2
	3138	TASK FORCE OFFICERS	CPT2/ CPT3	RB1	P5/GL/ST	--	P5	P5		1,3
	3142	CORRIDOR	CPT2/ CPT3	RB1	P5/GL/ ST	P5	P5	--		1
	3143	TECH. INVESTIGATORS	CPT3	RB1	P5	VWC3	P5	P5		1
	3144	SERGEANT	CPT2	RB1	P5	P5/ GL/ ST	P5	P5		
	3145	SERGEANT	CPT2	RB1	P5	P5/ GL/ ST	P5	P5		
	3146	SERGEANT	CPT2	RB1	P5	P5/ GL/ST	P5	P5		
	3149	STRATEGY CONF.	CPT2	RB1	P5	P4	P5	VWC2	P3	1,2,3,5
	3151	CORRIDOR	CPT2/ CPT3	PT6	PT6	--	--	--	P3	1,3,15
	3152	CORRIDOR	CPT2/ CPT3	RB1	P5/ GL/ST	P5	--	P5		
	3153	FOUNTAIN	PT2A	PT6/ PT4A	PT6	--	PT4A	PT4A	P3	1,2,14
	3154	CORRIDOR	CPT2/ CPT3	RB1	P5	--	P5	P5		1
	3155	LIEUTENANT	CPT2	RB1	P5	P5	P8	P5		
	3201	CORRIDOR	CPT3	RB1	P5	P5	GL/ST	P5		
	3202	INTERVIEW (4)	CPT2	RB1	WC	WC	WC	WC		
	3203	INTERVIEW (4)	CPT2	RB1	WC	WC	WC	WC		
	3204	VICTIM ASSIST	CPT2	RB1	P5	P5	P5	P5		
	3205	ADMIN. ASSIST.	CPT2	RB1	VWC3	VWC3/ P5	VWC3	VWC3/ P5		2
	3206	SOFT INTERVIEW	CPT2	RB1	WC	WC	WC	WC		
	3207	PUBLIC WAITING	CPT2	RB1	VWC3	VWC3	VWC3	GL/ST		2
	3208	TOILET	PT5A	PT5A/ CT2	PT5A	CT2	CT2	CT2	P3	
	3209	TOILET	PT5A	PT5A/ CT2	CT2	PT5A	CT2	CT2	P3	
	4001	PENTHOUSE								
	4002	ELEV. EQUIP.								

FINISH NOTES

1. REFERENCE FINISH PLANS A811, A821, AND A831 FOR EXTENT / LAYOUT OF FINISHES.
2. REFERENCE INTERIOR ELEVATION SHEETS A901- A911 FOR EXTENT OF FINISHES/ MILLWORK
3. REFERENCE REFLECTED CEILING PLAN SHEETS A311- A332 FOR EXTENT/LAYOUT OF FINISHES.
4. ALL EXPOSED ELEMENTS AND PERIMETER WALL FROM FINISH CEILING TO STRUCTURE TO BE PAINTED P6.
5. EXPOSED STEEL BRACES TO BE PAINTED P6.
6. WALK IN COOLER IS A SPECIFIED ITEM TO BE BUILT IN PLACE.
7. REFERENCE MEP, TECHNOLOGY, EAV, AND SIGNAGE DRAWINGS FOR LOCATIONS OF ALL DEVICES IN FABRIC WALLS WHICH WILL REQUIRE BLOCKING TO PREVENT FABRIC FROM PUCKERING.
8. STAIR ST-01 (PUBLIC LOBBY)
   - A. STAIR TREADS, PLATFORMS, AND RISERS TO BE PT2
   - B. STRINGERS TO BE PAINTED P1
   - C. RAILINGS FINISHES TO BE REFERENCED IN FINISH NOTE 15.
   - D. STAIR NOSINGS TO BE SCHLUTER TREP-FL- EB
   - E. GYPSUM BOARD CEILINGS UNDER STAIR SOFFITS TO BE PAINTED P3.
9. STAIR ST-02 (POLICE STAFF)
   - A. STAIR TREADS, PLATFORMS, AND RISERS TO BE PT5A
   - B. STRINGERS TO BE PAINTED P1
   - C. RAILINGS FINISHES TO BE REFERENCED IN FINISH NOTE 15.
   - D. STAIR NOSINGS TO BE SCHLUTER TREP-TAP
   - E. GYPSUM BOARD CEILINGS UNDER STAIR SOFFITS TO BE PAINTED P3.
10. STAIR ST-03 (EXIT STAIRWELL)
    - A. STAIR TREADS, PLATFORMS, AND RISERS TO BE SEALED CONCRETE (SC1)
    - B. STRINGERS TO BE PAINTED P1.
    - C. RAILINGS TO BE PAINTED P1.
11. PAINT ALL STEEL DOORS AND STEEL FRAMES JPS1.
12. PROVIDE SEAMLESS FLOORING AND INTEGRAL 4" BASE. PROVIDE SCHLUTER JOLLY- PG TO CAP BASE.
13 TILE BASE TO BE 8" HIGH.
14.TILE WALLS TO HAVE SCHLUTER TRIM AS FOLLOWS:
    - A. TILE AT STEEL FRAMES TO BE JOLLY-AE
    - B.FLOOR TO BASE TRANSITION TO BE DILEX-AHK
    - C.OUTSIDE CORNERS TO BE RONDEC-AE.
15.REFERENCE INTERIOR ELEVATION SHEET 1/ A841 FOR EXTENT OF RAILING PAINT COLORS P1, P2 AND P4 WITH ALUMINUM PIPE RAIL AND PERFORATED ALUMINUM PANELS.
16. QT BASE TO BE 8" TALL . PT5A BASE SOLELY AT STAIR PLATFORM WHERE PT AND ALUMINUM WAINSCOT OCCURS.
17. 4" TILE BASE AT MILLWORK.
18. AWP 3 TO BE INSTALLED 8'-02" A.F.F. TO 11'-0" CEILING ABOVE (REFERENCE CEILING PLANS)
19. INSTALL SV1 FLOOR FINISH ON ROLLING FILE PLATFORM AFTER PLATFORM INSTALLATION. INSTALL POLISHED CONCRETE BELOW PLATFORM.
20. INSTALL SCHLUTER SCHIENE- AE (2MM) AT ALL HORIZONTAL JOINTS BETWEEN PT3.
21.NO PAINT ON EXPOSED GALVANIZED STRUCTURE AND METAL DECK.
22. INSTALL CT1 TO FULL EXTENT OF JANITOR SINK TO (CORNER TO CORNER OF SINK) ON BOTH WALLS TO A HEIGHT OF 4'-0" A.F.F.
23. NOT USED
24. CEILING SKYLIGHTS TO BE PAINTED P3. WOOD TRIM ADJACENT TO FIRE CURTAIN BASE PLATE TO BE P1.
25. WOOD TRIM AT CEILING TO BE PAINTED P1.
26. REFERENCE DETAIL 9/A925 FOR PT4A WAINSCOT TILE 56" TALL WITH FRYE REGLET DCS-625-50 CONTINUOUS RUN AND DRYWALL ABOVE PAINTED P5.
27. TILE BASE WITH FLOOR TO BASE TRANSITION DILEX-AHK AND JOLLY- AE CONTINUOUS AT TOP OF THE TILE.

GENERAL NOTES

1. ALL FLOOR FINISHES MUST BE PROTECTED THROUGHOUT CONSTRUCTION PHASE.
2. CONTRACTOR TO PROVIDE TRANSITION STRIPS AT ALL FLOORING MATERIAL CHANGES AS NEEDED.
3. WHERE ADJACENT FLOORING MATERIALS CREATE DIFFERING HEIGHTS, TRANSITION SLOPE OF LOWER MATERIAL AT A POINT 18" FROM HIGHER MATERIAL TO MATCHING HEIGHTS .
4. ALL INTERIOR AREA STEEL DOOR/WINDOW FRAMES TO BE PAINTED P1 , UNLESS NOTED AS FOLLOWS: 1202A ; 1202B; 1203A; 1204A TO BE PAINTED JPS1.
5. ALL INTERIOR AREA STEEL DOORS TO BE PAINTED P1 , UNLESS NOTED AS FOLLOWS: 1202A; 1202B;1203A; 1204A TO BE PAINTED JPS1
6. ALL SITE ELEMENTS TO BE PAINTED P1, UNLESS NOTED OTHERWISE.
7. ALL EXTERIOR STEEL FRAMES TO BE PAINTED P1, UNLESS NOTED .
8. ALL EXTERIOR STEEL DOORS TO BE PAINTED P1, UNLESS NOTED.
9. REFERENCE SHEETS A811, A821, AND A831 FOR EXTENT OF CORNER GUARDS AND WINDOW SHADES.
10. PROVIDE RUBBER COVE BASE FOR ALL CARPET CONDITIONS, UNLESS NOTED OTHERWISE.
11. PROVIDE RUBBER COVE BASE AT ALL HARD SURFACE FLOOR FINISH CONDITIONS, UNLESS NOTED OTHERWISE.
12. ALL BOTTOM OF DRYWALL BULKHEADS SHOWN ON ARCHITECTURAL CEILING PLANS TO BE PAINTED P3, UNLESS NOTED OTHERWISE.
13. EXTERIOR BLOCK PAINT TO BE PAINTED P9.
14. SUBMIT LAYOUT OF CARPET PATTERNING FOR APPROVAL.
15. SUBMIT LAYOUT OF TILE PATTERNING FOR APPROVAL.
16. REFERENCE SPECIFICATIONS FOR FINISHES AT ELEVATOR, EXCEPT FLOORING TO BE AS SCHEDULED
17. VARY TILE BED DEPTH TO ACHIEVE SMOOTH FINISH SURFACE.
18. ALL INTERIOR EXPOSED STEEL COLUMNS TO BE PAINTED P1 AND STRUCTURAL BRACING.
19. REFERENCE SPECIFICATIONS FOR LEVEL OF FINISH AT ALL EXPOSED STEEL.
20. ENGINEERED STONE TO BE TYPICALLY 2CM THICKNESS. 1 CM THICKNESS ON BACKSPLASHES.
21.AT LOCATIONS WHERE ENGINEERED STONE IS USED AS AN INTERIOR SILL, USE ES3 AS MATERIAL.

FINISH LEGEND

CARPET
CPT1 SHAW CONTRACT
COLLECTION: STEPPIN OUT COLLECTION
STYLE: WELCOME II TILE
COLOR: 31549 CHARCOAL

CPT2 SHAW CONTRACT
COLLECTION: GRADATION TILE 5T339
COLOR: 39597 SLATE
INSTALL: QUARTER TURN

CPT3 SHAW CONTRACT
COLLECTION: GRADATION TILE 5T339
COLOR: 39496 COBALT
INSTALL: QUARTER TURN

CPT4 NOT USED

CPT5 SHAW CONTRACT
COLLECTION: CAMPUS
STYLE: QUAD TILE 5T324
COLOR: INK STEEL 23505
INSTALL: QUARTER TURN

CPT6 SHAW CONTRACT
COLLECTION: 18X36
STYLE: OVERLAY 59598
COLOR: 95505 MOTION
INSTALL: ASHLAR

CPT7 SHAW CONTRACT
COLLECTION: DYE LAB 5T041
COLOR: 41496 INDIGO
ORIGINAL DYE LAB CLASSIC TILE
INSTALL: MONOLITHIC

CPT8 SHAW CONTRACT
COLLECTION: DYE LAB 5T041
COLOR: 41462 SAXON
INSTALL: MONOLITHIC

CPT9 SHAW CONTRACT
COLLECTION: DYE LAB 5T041
COLOR:41535 HENNA
INSTALL: MONOLITHIC
FOR ALL SHAW PRICING, CONTACT KATHLEEN GRIEF @ #972.207.3818.

ACOUSTIC WRAPPED PANEL
AWP1 HBF TEXTILES
COLLECTION: ZIGGY ZAG 997
COLOR: LIGHT GREY 80
INSTALLATION: QUARTER TURN EACH PANEL
AWP2 HBF TEXTILES
COLLECTION: ZIGGY ZAG 997
COLOR: BLACK 90
INSTALLATION: QUARTER TURN EACH PANEL

AWP3 HBF TEXTILES
COLLECTION: ZIGGY ZAG 997
COLOR: OFF WHITE 11
INSTALLATION: QUARTER TURN EACH PANEL

BUTCHER BLOCK COUNTER
BBC
BURNISHED SCORED BLOCK
BSB

GROUT
G1
G2

RUBBER BASE
RB1 ROPPE
194 BURNT UMBER
WALL BASE

RESILIENT ATHLETIC FLOORING
RAF1 DURASOUND TILE 2.75"
COLOR: MIDNIGHT BLACK

SEALED CONCRETE
SC1

TACKABLE SURFACE
TS

TILE
PT1 CONCEPT SURFACES
SERIES: THE TOWNE
COLOR: GREEN
FINISH: POLISHED
SIZE:
INSTALLATION: VERTICALLY

PT1A CONCEPT SURFACES
SERIES: THE TOWNE
COLOR: GREEN
FINISH: MATTE
SIZE:
INSTALLATION: VERTICALLY

PT2 CONCEPT SURFACES
SERIES: THE TOWNE
COLOR: DARK
FINISH: POLISHED
SIZE:
INSTALLATION: BRICK

PT2A CONCEPT SURFACES
SERIES: THE TOWNE
COLOR: DARK
FINISH: MATTE
SIZE:
INSTALLATION: BRICK

PT3 CONCEPT SURFACES
SERIES: THE TOWNE
COLOR: CORTEN
FINISH: MATTE
SIZE:
INSTALLATION: HORIZONTALLY STACKED
ADD SCHLUTER DECO- AE
FOR ALL CONCEPT SURFACES PRICING , CONTACT MAGGIE CURTIS @#972.386.4900.

PT4 CERAMIC TECHNICS
SERIES: SITTA VEIN STONE
COLOR: WHITE
FINISH: POLISHED
SIZE:
INSTALLATION: HORIZONTALLY STACKED

PT4A CERAMIC TECHNICS
SERIES: SITTA VEIN STONE
COLOR: WHITE
FINISH: NATURAL
SIZE:
INSTALLATION: HORIZONTALLY STACKED

PT5 CERAMIC TECHNICS
SERIES: SITTA VEIN STONE
COLOR: GREY
FINISH: POLISHED
SIZE:
INSTALLATION: HORIZONTALLY STACKED

PT5A CERAMIC TECHNICS
SERIES: SITTA VEIN STONE
COLOR: GREY
FINISH: NATURAL
SIZE:
INSTALLATION: HORIZONTALLY STACKED

PT6 CERAMIC TECHNICS
SERIES: STONEWORKS INDUSTRIAL CORRUGATED METAL
COLOR: RUSTY
SIZE: 4" X 8"

PT7 CERAMIC TECHNICS
SIENNA CLASSIC DESIGN STONES EVO
STYLE: BATTUTO DI LISTELLI
COLOR: CALACATTA RENIOR
SIZE: 12" X 24"
INSTALL: HORIZONTALLY
FOR ALL CERAMIC TECHNICS PRICING, CONTACT SHARON GLIDDEN @ #214.533.4523.

PT8 CERAMIC TECHNICS
STONEWORKS INDUSTRIAL REFLECTIONS
COLOR: OCEAN FORM
SIZE: 8" X 24"

PT8A CERAMIC TECHNICS
STONEWORKS INDUSTRIAL REFLECTIONS
COLOR: OCEAN MOVE
SIZE: 8" X 24"

PT9 DALTILE
KEYSTONES
COLOR: SUEDE GRAY D128
SIZE: 2" X 2"

CT1 INTERCERAMIC TILE
COLLECTION: IC BRITES
COLOR: ULTRA WHITE
SIZE: 4" X 4"

CT2 INTERCERAMIC TILE
COLLECTION: WALL TILE COLLECTION
COLOR: LUXE GREY
SIZE: 4" X 4"

QUARRY TILE
QT INTERCERAMIC
STYLE: QUARRY BASICS
COLOR: BUCKSKIN UNGLAZED
SIZE: 4" X 8"

STAINLESS STEEL
SS

ALUMINUM
AL

STEEL
ST

MIRROR
MR

ANTI STATIC FLOORING
ASF1 JULE ANTISTATIC STATIC PULSE 0012V
STYLE: EVEREST SUMMIT SERIES
COLOR: MCKINLEY

LUXURY VINYL TILE
LVT1 SHAW CONTRACT
STYLE: REFRAME 4004V
COLOR: CONVERSION 04530

LVT2 SHAW CONTRACT
STYLE: COMPOUND V2
COLOR: 77504 BASE

SHEET VINYL
SV1 SHAW CONTRACT
STYLE: VITALITY
COLOR: RESTORE WEL5204

POLISHED CONCRETE
PC

CORNER GUARD
CG1 ACROVYN #187 TAN BARK

WIRE MESH
M1 GAGE CORPORATION ST. PAUL GW909 SS/CA
STAINLESS STEEL/ COPPER

LAMINATE WALL PANELS
MP1 = L1 WILSONART FLORENCE WALNUT 7993

WALL CARPET
WC1 TRI KES SILENCE ASIL-02 WARM GRAY

WALL PROTECTION
WP1 ACROVYN #410 BRUSHED SILVER
WP2 ACROVYN #378 BRUSHED NICKEL

PLASTIC LAMINATE
L1 WILSONART FLORENCE WALNUT 7993
L2 WILSONART PORTICO TEAK 8210K
L3 NEVAMAR HLT 001T BASIC BLACK HAUTELINK

ENGINEERED STONE MATERIAL
ES1 WILSONART QUARTZ
GREY LAKE Q1009

ES2 WILSONART QUARTZ
ARLINGTON Q1005

ES3 WILSONART QUARTZ
SOHO Q1019

VINYL WALL COVERING
VWC1 TRI KES SOURCE ONE
COLLECTION: TRAVELER
COLOR: DEVON 2 VTRA- 11

VWC2 TRI KES SOURCE ONE
COLLECTION: TRAVELER
COLOR: FEZ 2 VTRA-12

VWC3 TRI KES SOURCE ONE
COLLECTION: TRAVELER
COLOR: RED KING 2 VTRA- 02

PAINT
ALL PAINTS TO BE SHERWIN WILLIMAS
P1 SW7046 ANONYMOUS (STEEL)
P2 SW6167 GARDEN GATE
P3 SW7005 PURE WHITE
P4 SW6055 FIERY BROWN
P5 SW7044 AMAZING GRAY(TYPICAL)
P6 SW7674 PEPPERCORN
P7 SW6235 FOGGY DAY
P8 SW6508 SECURE BLUE
P9 CHINA DOLL SW7517

JAIL PAINT SYSTEM
JPS "X"

Architect: Brinkley Sargent Wiginton Architects (972) 960-9970
Landscape: Kendall Landscape Architecture (214) 739-3226
Structural: L.A. Fuess Partners, Inc (214) 593-1118
MEP: M-E Engineers (214) 741-1589
Civil: KSA Engineers, Inc (903) 236-7700
Technology: M-E Engineers (303) 421-6656

BRINKLEY SARGENT WIGINTON ARCHITECTS

LONGVIEW POLICE DEPARTMENT

518 W. SOUTH ST. LONGVIEW, TEXAS 75601

HISTORY		
#	DATE	DESCRIPTION

REGISTERED ARCHITECT HAROLD E. SARGENT 9941 STATE OF TEXAS
08/19/2020

LEVEL 3 & PENTHOUSE - FINISH SCHEDULE, NOTES & LEGEND

21719
08/19/2020
A803

BID ISSUE

8/21/2020 12:52:48 PM
D:\Revit Locals\LPD_CENTRAL_A19_lfloresgomez.rvt

© 2020 Brinkley Sargent Wigginton Architects, Inc.

ROOM SCHEDULE - LVL 1

NUMBER	ROOM NAME
1001	VESTIBULE
1002	AFTER HOURS COUNTER
1003	DISPLAY
1004	DISPLAY
1005	LOBBY
1006	SOFT INTERVIEW (5)
1007	PUBLIC TOILET
1008	VESTIBULE
1009	SEX OFFENDER FILES
1011	PUBLIC SERVICE WINDOW
1012	RAMP
1013	TOILET
1014	HOLD. JUV.
1015	COFFEE
1016	SECURITY DESK
1017	RAMP

ROOM SCHEDULE - LVL 1

NUMBER	ROOM NAME
1018	WAITING (5)
1019	SEX OFFENDER REG.
1021	SEX OFFENDER REG.
1022	PHOTO/FINGERPRINT
1101	VESTIBULE
1102	COMMUNICATIONS CENTER
1103	AUX CALL TAKER
1104	MANAGER
1105	ADMINISTRATOR
1106	ADMIN. ASST.
1107	TRAINING CONSOLES
1108	TRAINING COORDINATOR
1109	CORRIDOR
1111	CORRIDOR
1112	BREAK
1113	CORRIDOR
1114	CONFERENCE (9)

ROOM SCHEDULE - LVL 1

NUMBER	ROOM NAME
1115	IT WORKROOM
1116	SERVER ROOM
1117	TOILET
1118	TOILET
1119	LOCKERS
1120	COMPRESSOR
1121	CORRIDOR
1201	VESTIBULE
1202	WORK/PROCESS DESK
1203	SINGLE HOLDING
1204	SINGLE HOLDING
1205	SECURE VESTIBULE
1206	INTERROGATION (3)
1207	TOILET
1208	SOUND VEST.

ROOM SCHEDULE - LVL 1

NUMBER	ROOM NAME
1301	RECORDS COUNTER
1302	DELIVERY STOR.
1303	RECORDS CLERKS
1304	COPY/WORK/COFFEE
1305	SUPERVISOR
1306	CORRIDOR
1307	CENTRAL MAIL / OFFICER COUNTER
1308	ELEC. CLOSET
1309	IT/DATA CLOSET
1311	STAFF TOILET
1312	TRASH
1313	HONOR GUARD
1314	PATROL LOCKERS
1315	CORRIDOR
1316	ICE/WATER/UTILITY

ROOM SCHEDULE - LVL 1

NUMBER	ROOM NAME
1317	ELEVATOR DROP
1318	STAFF VEST.
1319	K-9 OFFICE
1320	CORRIDOR
1401	EVID. WORK / LOCKERS
1402	MAJOR CASE / EVID. WORK
1403	STAFF SERVICE WINDOW
1404	EVIDENCE / PROPERTY WORK
1405	EVID. VIEWING / ATTORNEY
1406	TOILET
1407	SUPERVISOR
1408	COFFEE
1409	EV. PROP. FILES
1411	PROPERTY / STORAGE
1412	STORAGE
1413	WALK-IN COOLER
1414	EVID. PROCESSING
1415	WEAPONS STORAGE

ROOM SCHEDULE - LVL 1

NUMBER	ROOM NAME
1416	DRUG STORAGE
1424	JAN.
1426	LARGE PROP.
1427	VEST. / AFTERHOURS DROP
1429	DESTRUCTION
1431	VEHICULAR PROCESSING
1432	CLEAN DRESS
1433	PRIMARY LAB
1434	POWDER PROCESSING
1435	ALTERNATE LIGHT
1436	PES INVESTIGATORS
1437	SERGEANT
1438	COMPARISON LAB
1439	PES STORAGE
1441	TOILET
1442	DRYING CABINETS
1443	CORRIDOR

ROOM SCHEDULE - LVL 1

NUMBER	ROOM NAME
1419	SEXUAL ASSUALT PROP. STOR.
1421	LARGE ITEM STORAGE
1422	TUBE STOR.
1423	LONG TERM PROP. STOR.
1424	JAN.
1425	CORRIDOR
1426	LARGE PROP.
1427	VEST. / AFTERHOURS DROP
1428	EVIDENCE TRANSFER
1429	DESTRUCTION
1431	VEHICULAR PROCESSING
1432	CLEAN DRESS
1433	PRIMARY LAB
1434	POWDER PROCESSING
1435	ALTERNATE LIGHT
1436	PES INVESTIGATORS
1437	SERGEANT
1438	COMPARISON LAB
1439	PES STORAGE
1441	TOILET
1442	DRYING CABINETS
1443	CORRIDOR

ROOM SCHEDULE - LVL 1

NUMBER	ROOM NAME
1501	VESTIBULE
1502	K-9 STORAGE
1503	TOILET
1504	CENTRAL JAN.
1505	CORRIDOR
1506	MECHANICAL
1508	VEHICLE MAINT. BAY
1509	FLEET STOR./WORK
1511	FLEET OFFICE
1512	EMERGENCY POWER
1513	NORMAL POWER
1514	COMPRESSOR
1515	CLEANING BAY
1516	SWAT VEHICLE
1517	VESTIBULE
1518	SWAT STORAGE / LOCKERS / EQUIP.
1519	WEAPON CLEANING
1521	ARMORY
1522	SPRINKLER

ROOM SCHEDULE - LVL 1

NUMBER	ROOM NAME
1601	BIKE PATROL
1602	COMPRESSOR
1603	PATROL/TRAFFIC STOR.
1604	GOLF CARTS
1605	MOTORCYCLE
1606	TRAILERS
1607	DRY VALVE/COMPRESSOR
EL-01	ELEVATOR
EL-02	STAFF ELEVATOR
ST-01	LOBBY STAIR
ST-02	STAFF STAIR
ST-03	EXIT STAIR

FINISH PLAN LEGEND

	MATERIAL TRANSITION
TRANSACTION COUNTERTOP UPPERS/LOWERS → PL-1, PL-2, PL-3	MILLWORK TAG
	MOTORIZED SHADE
	MANUAL SHADE
	MOTORIZED SHADE/BLACKOUT
	MANUAL SHADE/BLACKOUT
	MOTORIZED BLACKOUT
	MANUAL BLACKOUT
	CORNER GUARD
	CORNER GUARD-STAINLESS
	LINEAR PATTERN DIRECTION

SHEET NOTES:

1. REFERENCE FINISH SCHEDULE FOR ADDITIONAL FINISH INFORMATION

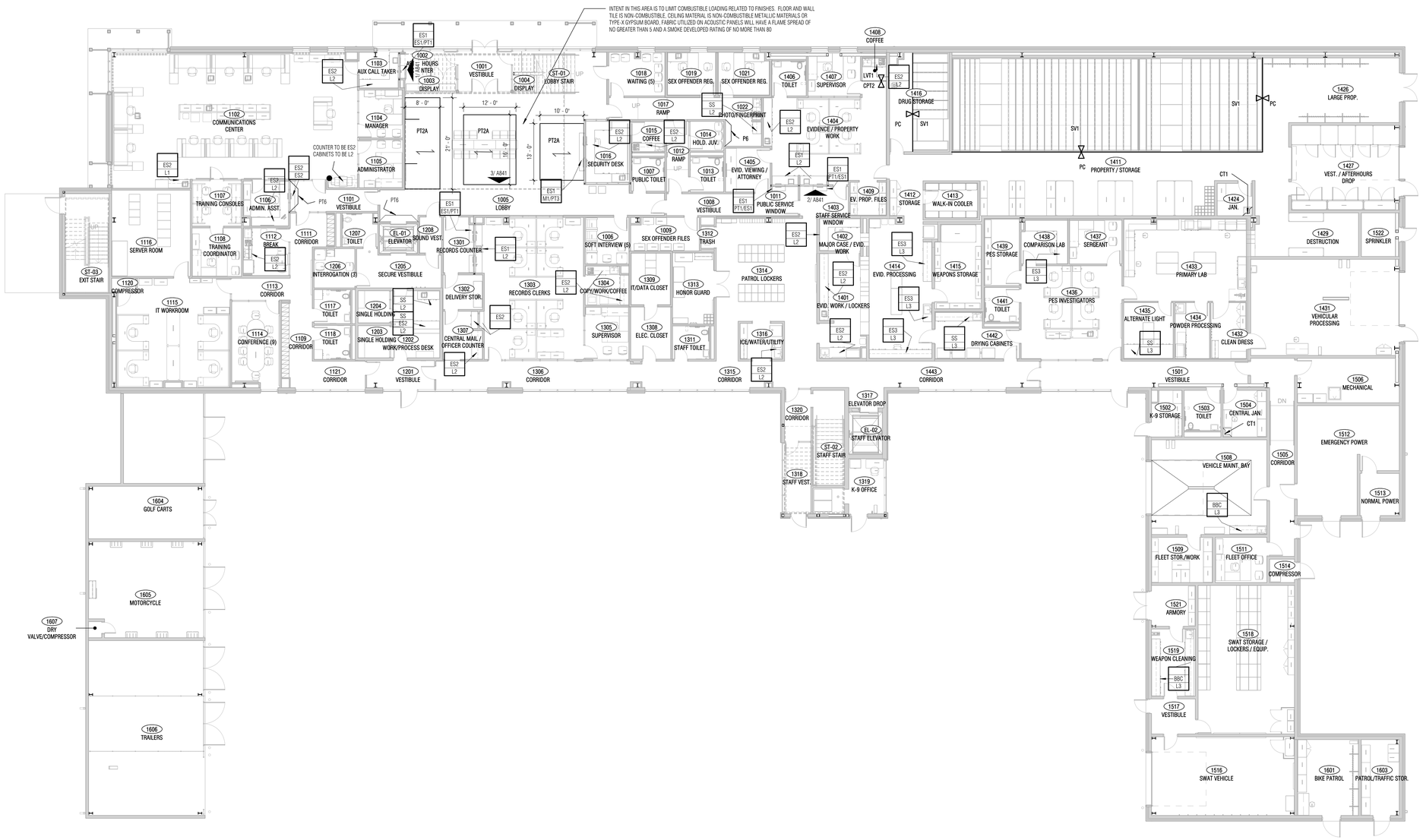

NORTH

1 LEVEL 1 - FINISH PLAN

SCALE: 3/32" = 1'-0"

0" 5'4" 10'8"

Architect: Brinkley Sargent Wigginton Architects (972) 960-9970
Landscape: Kendall Landscape Architecture (214) 739-3226
Structural: L.A. Fuess Partners, Inc (214) 593-1118
MEP: M-E Engineers (214) 741-1589
Civil: KSA Engineers, Inc (903) 236-7700
Technology: M-E Engineers (303) 421-6656

BRINKLEY SARGENT WIGGINTON ARCHITECTS

LONGVIEW POLICE DEPARTMENT

518 W. SOUTH ST. LONGVIEW, TEXAS 75601

HISTORY

#	DATE	DESCRIPTION

REGISTERED ARCHITECT DONALD W. SARGENT 9941 STATE OF TEXAS
08/19/2020

LEVEL 1 - FINISH PLAN

BID ISSUE

21719
08/19/2020
A811

5/21/2020 12:49:57 PM

G:\Revit Locals\LPD_CENTRAL_A19_Honeywell.rvt

© 2020 Brinkley Sargent Wigginton Architects, Inc.

ROOM SCHEDULE - LVL 2	
NUMBER	ROOM NAME
2001	2ND FLOOR LOBBY
2002	VESTIBULE
2003	CATERING/SERVING
2004	TRAINING / COMMUNITY ROOM
2005	STORAGE
2006	A/V
2007	FOUNTAIN
2008	MEN'S
2009	WOMEN'S
2010	COFFEE
2011	CORRIDOR
2012	OFFICERS
2013	WORK/COPY
2014	FILES/STOR.
2015	CORRIDOR

ROOM SCHEDULE - LVL 2	
NUMBER	ROOM NAME
2016	INTERVIEW
2017	CONFERENCE (4)
2018	SERGEANT
2019	TRAINING SGT
2020	VESTIBULE
2021	TRAINING/SIMULATOR
2101	RECORDS ARCHIVES
2102	RECEPTION
2103	ADMIN. ASSIST.
2104	CORRIDOR
2105	LIEUTENANTS
2106	LIEUTENANTS
2107	LIEUTENANTS
2108	CONFERENCE
2109	CORRIDOR
2110	VIDEO DOWNLOAD STATION
2111	MAIL/SUPPLY/FORMS
2112	SERGEANT (4)
2113	BRIEFING
2114	CORRIDOR
2115	PLANNING RESEARCH
2116	PLANNING / RESEARCH SERGEANT
2117	REPORT WRITING
2118	SPECIAL OPERATIONS LT.
2119	ELEVATOR DROP
2120	CORRIDOR
2121	CORRIDOR
2122	SERGEANT (4)
2123	QUARTERMASTER
2124	ELEC. CLOSET
2125	IT/DATA CLOSET
2126	SRO/SI/PRI SERGEANTS
2127	COMM. SERVICES / PAR STORAGE
2128	GENERAL STORAGE
2129	QUARTERMASTER
2130	CORRIDOR
2131	QUARTERMASTER STOR.
2132	DRESSING ROOM
2133	CORRIDOR
2134	CORRIDOR
2135	TRAFFIC UNIT
2136	TRAFFIC SERGEANT
2137	STORAGE
2138	BREAKROOM/VENDING
2139	JUVENILE CONF. (4)
2140	VESTIBULE
2141	SERGEANT (4)
2142	SERGEANT (4)
2143	EQUIP. DISTRIBUTION/STOR.
2144	SPECIAL INVESTIGATIONS
2145	SERGEANT (2)

ROOM SCHEDULE - LVL 2	
NUMBER	ROOM NAME
2145	SERGEANT (2)
2201	SOUND VEST.
2202	SUPPLY
2203	QUIET RM
2204	LACTATION/QUIET RM
2205	DRY/CLEAN
2206	CORR.
2207	MEN'S
2208	VESTIBULE
2209	WOMEN'S
2211	ACCESSIBLE SHOWER
2212	LOCKER CIRC.
2213	LOCKER ROOM
2214	LOCKER CIRC.
2215	EXERCISE
2216	FOUNTAIN
2217	DRESSING
2218	DRESSING
2219	DRESSING
2220	DRESSING
2221	DRESSING
2222	ACCESSIBLE DRESSING
2223	DRESSING
2224	TOILET/SHOWER
2225	UTILITY ROOM
2226	SHOWER
2227	SHOWER
2228	ACCESSIBLE SHOWER
2229	ACCESSIBLE SHOWER
2231	VESTIBULE
4001	PENTHOUSE
4002	ELEV. EQUIP.
EL-01	ELEVATOR

ROOM SCHEDULE - LVL 2	
NUMBER	ROOM NAME
EL-02	STAFF ELEVATOR
ST-01	LOBBY STAIR
ST-02	STAFF STAIR
ST-03	EXIT STAIR

FINISH PLAN LEGEND

	MATERIAL TRANSITION
TRANSACTION COUNTERTOP UPPERS/LOWERS → PL-1, PL-2, PL-3	MILLWORK TAG
■■■■■	MOTORIZED SHADE
○○○○○	MANUAL SHADE
■■■■■	MOTORIZED SHADE/BLACKOUT
□□□□□	MANUAL SHADE/BLACKOUT
■■■■■	MOTORIZED BLACKOUT
□□□□□	MANUAL BLACKOUT
●	CORNER GUARD
Ⓢ	CORNER GUARD-STAINLESS
	LINEAR PATTERN DIRECTION

SHEET NOTES:

1. REFERENCE FINISH SCHEDULE FOR ADDITIONAL FINISH INFORMATION

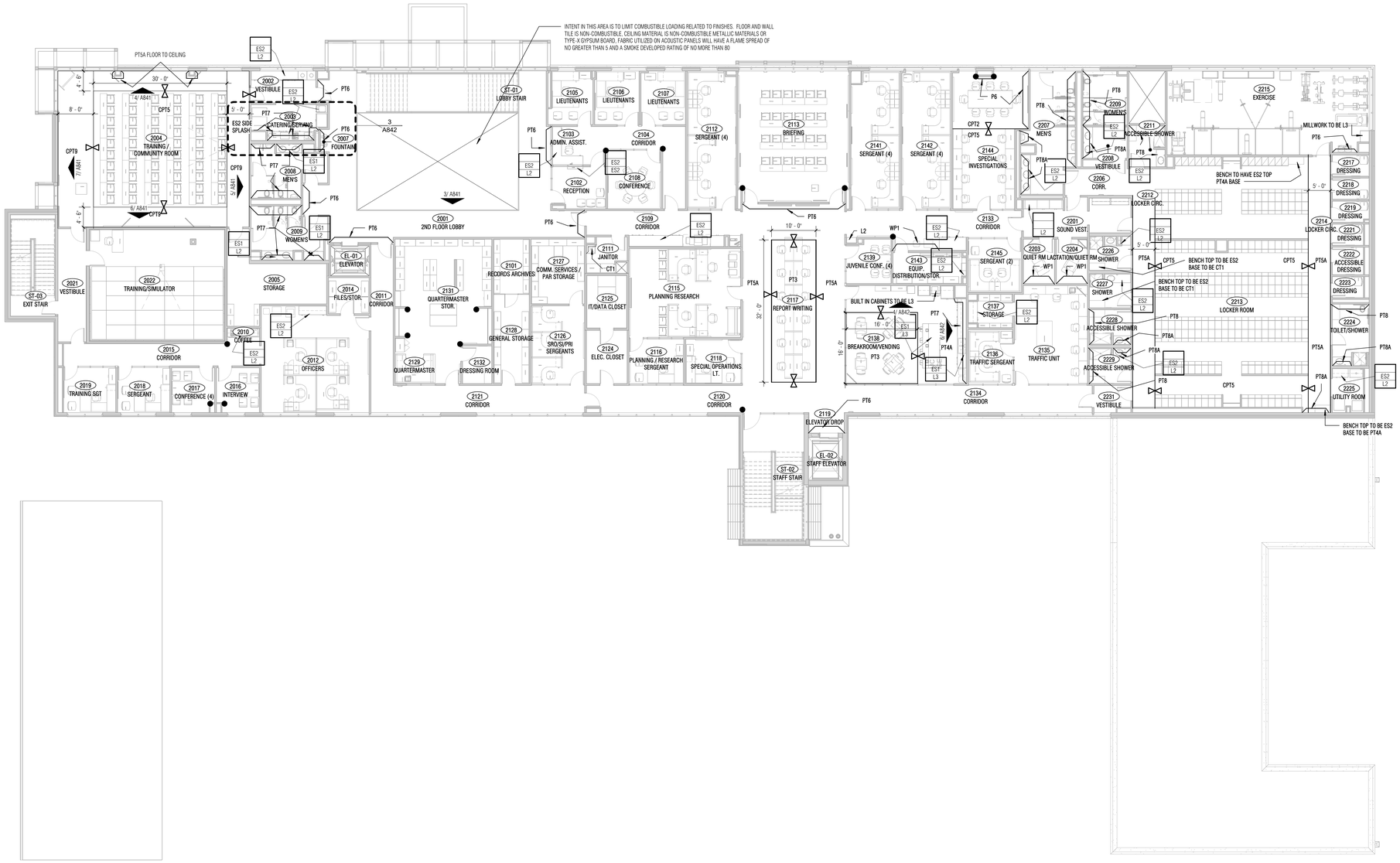

1 LEVEL 2 - FINISH PLAN

SCALE: 3/32" = 1'-0"

NORTH

0" 5'4" 10'8"

Architect: Brinkley Sargent Wigginton Architects (972) 960-9970
Landscape: Kendall Landscape Architecture (214) 739-3226
Structural: L.A. Fuess Partners, Inc (214) 593-1118
MEP: M-E Engineers (214) 741-1589
Civil: KSA Engineers, Inc (903) 236-7700
Technology: M-E Engineers (303) 421-6656

BRINKLEY SARGENT WIGINTON ARCHITECTS

LONGVIEW POLICE DEPARTMENT

518 W. SOUTH ST. LONGVIEW, TEXAS 75601

HISTORY

#	DATE	DESCRIPTION

REGISTERED ARCHITECT RICHARD SARGENT 9941 STATE OF TEXAS
08/19/2020

LEVEL 2 - FINISH PLAN

BID ISSUE

21719
08/19/2020

A821

5/21/2020 12:51:21 PM

G:\Revit Locals\LPD_CENTRAL_A19_Richardsonsz.rvt

© 2020 Brinkley Sargent Wigginton Architects, Inc.

ROOM SCHEDULE - LVL 3	
NUMBER	ROOM NAME
3001	OVERLOOK
3002	RECEPTION / WAITING
3003	CORRIDOR
3004	COFFEE
3005	OFFICE MANAGER
3006	ADMIN. ASSIST.
3007	CORRIDOR
3008	CONFERENCE
3009	EXEC. ASSIST.
3011	CORRIDOR
3012	POLICE CHIEF
3013	ASSISTANT CHIEF
3014	WORK/COPY
3015	WOMENS
3016	PERSONNEL FILES

ROOM SCHEDULE - LVL 3	
NUMBER	ROOM NAME
3017	MENS
3018	ADMIN. SERGEANT
3019	CORRIDOR
3021	CENTRAL SUPPLY
3022	CORRIDOR
3023	ASSIST. CHIEF
3024	CAPTAIN
3025	CAPTAIN
3026	SUPPORT SERVICES LT.
3027	CAPTAIN
3028	I.A. LIEUTENANT
3029	I.A. LIEUTENANT
3031	I.A. FILES
3032	CONF. (4) / INTERVIEW
3101	CORRIDOR
3102	RECEPTION

ROOM SCHEDULE - LVL 3	
NUMBER	ROOM NAME
3103	SUSPECT WAITING
3104	INTERROGATION (3)
3105	INTERROGATION (3)
3106	TOILET
3107	P.I.O. / SOCIAL MEDIA
3108	WOMEN'S
3109	MEN'S
3111	CORRIDOR
3112	SHREDDER
3113	STORAGE
3114	CORRIDOR
3115	ELECTRICAL CLOSET
3116	IT/DATA CLOSET
3117	CORRIDOR
3118	JANITOR
3119	DETECTIVES

ROOM SCHEDULE - LVL 3	
NUMBER	ROOM NAME
3121	DETECTIVES
3122	ELEVATOR DROP
3123	CORRIDOR
3124	DETECTIVES
3125	DETECTIVES
3126	CORRIDOR
3127	DETECTIVES
3128	SERGEANT
3129	STORAGE
3130	COFFEE
3131	COPY/WORK/COFFEE
3132	EQUIPMENT ROOM
3133	EVIDENCE STORAGE
3134	CYBER LAB RECEIVING
3135	TECH. INVESTIGATORS/CYBER LAB
3136	FORENSICS I.T.
3137	SOLDER WORKSTATION
3138	TASK FORCE OFFICERS

ROOM SCHEDULE - LVL 3	
NUMBER	ROOM NAME
3139	VIDEO STATION
3141	TASK FORCE OFFICERS
3142	CORRIDOR
3143	TECH. INVESTIGATORS
3144	SERGEANT
3145	SERGEANT
3146	SERGEANT
3147	CORRIDOR
3148	DETECTIVE
3149	STRATEGY CONF.
3151	CORRIDOR
3152	CORRIDOR
3153	FOUNTAIN
3154	CORRIDOR

ROOM SCHEDULE - LVL 3	
NUMBER	ROOM NAME
3155	LIEUTENANT
3201	CORRIDOR
3202	INTERVIEW (4)
3203	INTERVIEW (4)
3204	VICTIM ASSIST
3205	ADMIN. ASSIST.
3206	SOFT INTERVIEW
3207	PUBLIC WAITING
3208	TOILET
3209	TOILET
4001	PENTHOUSE
4002	ELEV. EQUIP.
EL-01	ELEVATOR
EL-02	STAFF ELEVATOR
ST-01	LOBBY STAIR
ST-02	STAFF STAIR
ST-03	EXIT STAIR

FINISH PLAN LEGEND

	MATERIAL TRANSITION
TRANSACTION → PL-1 COUNTERTOP → PL-2 UPPERS/LOWERS → PL-3	MILLWORK TAG
	MOTORIZED SHADE
	MANUAL SHADE
	MOTORIZED SHADE/BLACKOUT
	MANUAL SHADE/BLACKOUT
	MOTORIZED BLACKOUT
	MANUAL BLACKOUT
	CORNER GUARD
	CORNER GUARD-STAINLESS
	LINEAR PATTERN DIRECTION

SHEET NOTES:

1. REFERENCE FINISH SCHEDULE FOR ADDITIONAL FINISH INFORMATION

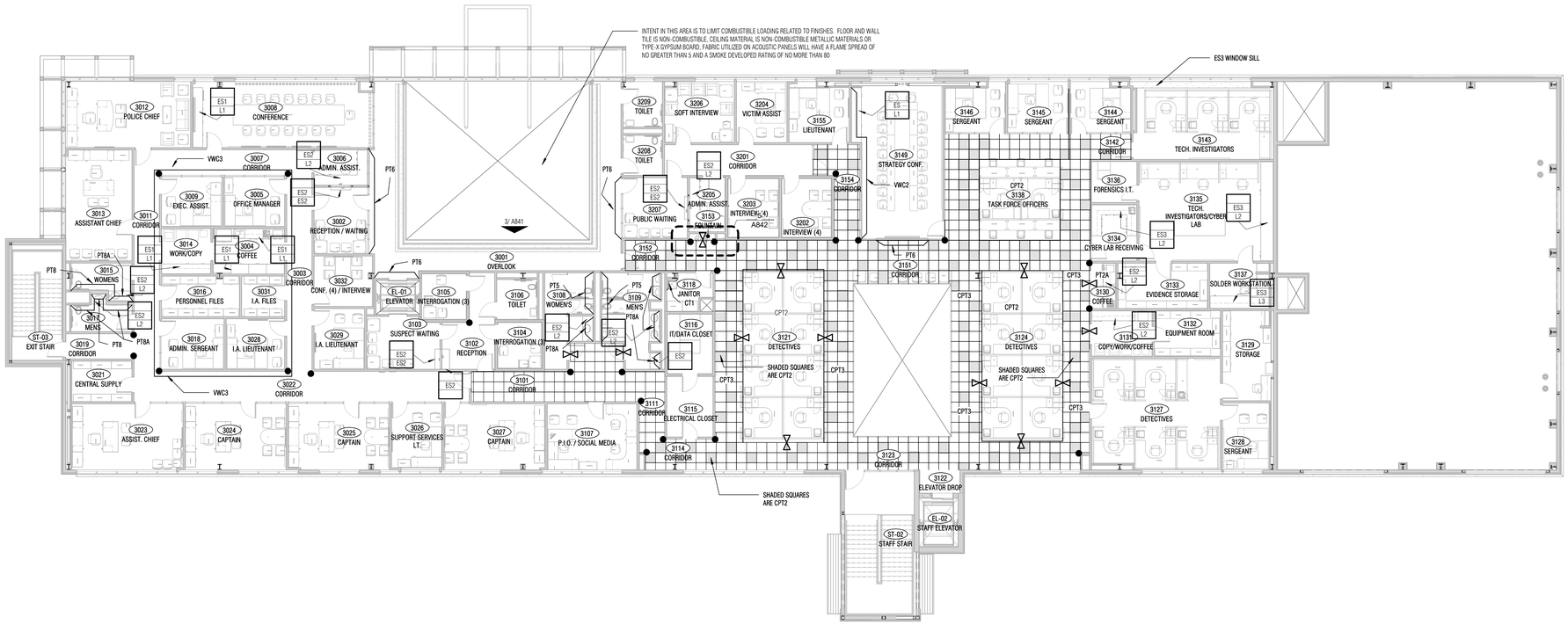

1 LEVEL 3 - FINISH PLAN

SCALE: 3/32" = 1'-0"

NORTH

0" 5'4" 10'8"

Architect: Brinkley Sargent Wigginton Architects (972) 960-9970
Landscape: Kendall Landscape Architecture (214) 739-3226
Structural: L.A. Fuess Partners, Inc (214) 593-1118
MEP: M-E Engineers (214) 741-1589
Civil: KSA Engineers, Inc (903) 236-7700
Technology: M-E Engineers (303) 421-6656

BRINKLEY SARGENT WIGGINTON ARCHITECTS

LONGVIEW POLICE DEPARTMENT

518 W. SOUTH ST. LONGVIEW, TEXAS 75601

HISTORY

#	DATE	DESCRIPTION

LEVEL 3 - FINISH PLAN

21719

08/19/2020

A831

BID ISSUE

5/21/2020 12:52:06 PM

G:\Revit Locals\JRC_CENTRAL_A19_Honeywell.rvt

© 2020 Brinkley Sargent Wigginton Architects, Inc.

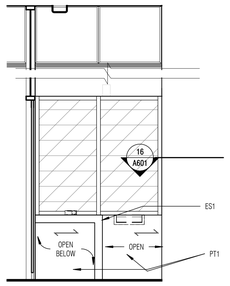

1 IE_1002_AFTERHRS LOBBY COUNTER FINISHES
SCALE: 3/8" = 1'-0"

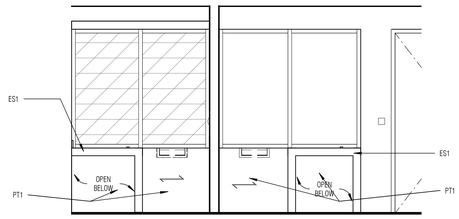

2 IE_1011/1403_PUBLIC AND STAFF SERVICE WINDOWS_FINISHES
SCALE: 3/8" = 1'-0"

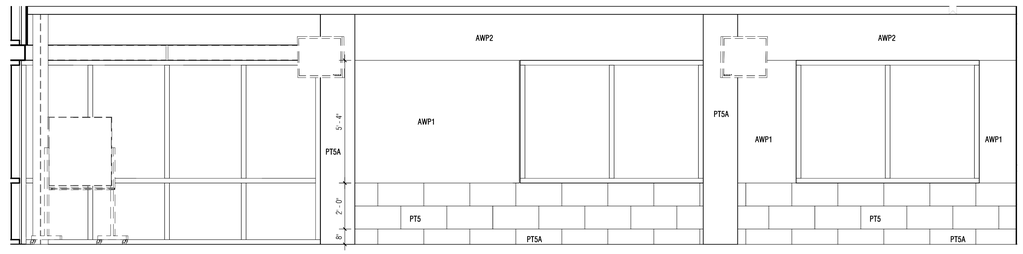

4 IE_2004_TRAINING / COMMUNITY ROOM - NORTH FINISHES
SCALE: 3/8" = 1'-0"

3 IE_LVL1_LOBBY - C - FINISHES
SCALE: 3/8" = 1'-0"

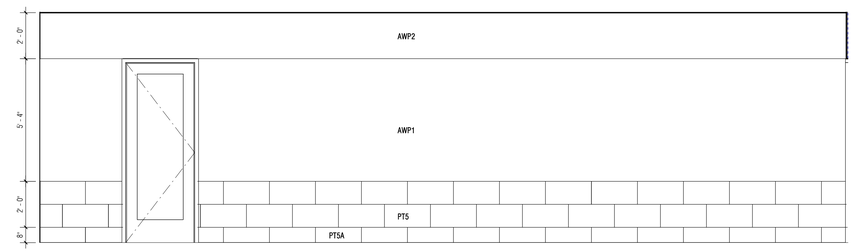

5 IE_2004_TRAINING / COMMUNITY ROOM - EAST WALL FINISHES
SCALE: 3/8" = 1'-0"

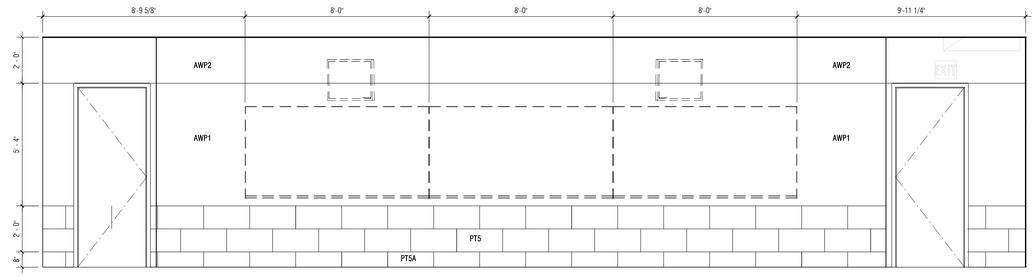

6 IE_2004_TRAINING / COMMUNITY ROOM - SOUTH WALL FINISHES
SCALE: 3/8" = 1'-0"

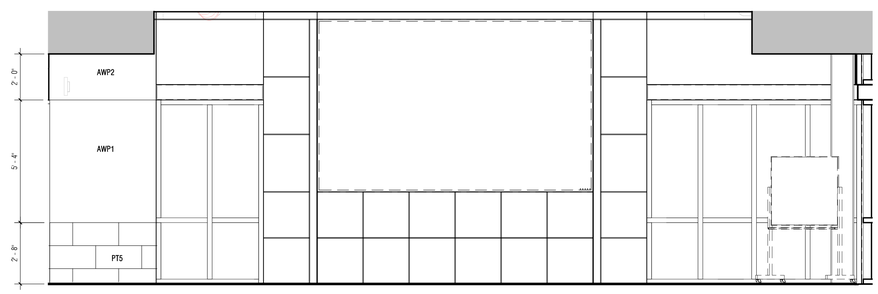

7 IE_2004_TRAINING / COMMUNITY ROOM - WEST WALL FINISHES
SCALE: 3/8" = 1'-0"

BRINKLEY SARGENT WIGINTON ARCHITECTS

Architect: Brinkley Sargent Wigginton Architects (972) 960-9970
Landscape: Kendall Landscape Architecture (214) 739-3226
Structural: L.A. Fuess Partners, Inc (214) 593-1118
MEP: M-E Engineers (214) 741-1589
Civil: KSA Engineers, Inc (903) 236-7700
Technology: M-E Engineers (303) 421-6656

LONGVIEW POLICE DEPARTMENT

518 W. SOUTH ST. LONGVIEW, TEXAS 75601

HISTORY		
#	DATE	DESCRIPTION

REGISTERED ARCHITECT 9941 STATE OF TEXAS
08/19/2020

FINISH ELEVATIONS

21719
08/19/2020

A841

BID ISSUE

8/19/2020 4:27:35 PM

D:\Revit Locals\LPD_CENTRAL_A19_Scanner_08-18-2020.rvt

© 2020 Brinkley Sargent Wigginton Architects, Inc.

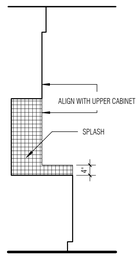

1 TYP. FULL-HGT SPLASH
SCALE: 1/2" = 1'-0"

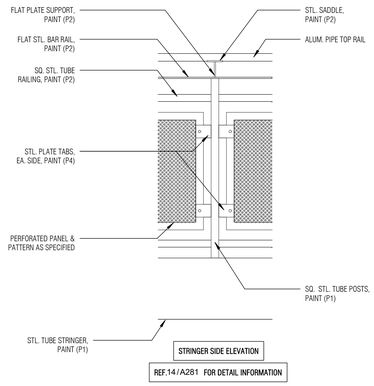

2 FINISH ELEVATION - TYP. PERFORATED PANEL GUARDRAIL
SCALE: 1" = 1'-0"

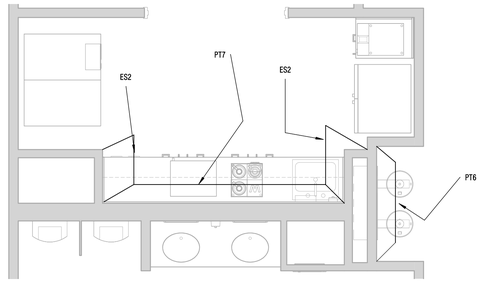

3 ROOM 2003 CATERING KITCHEN - CALLOUT 1
SCALE: 3/8" = 1'-0"

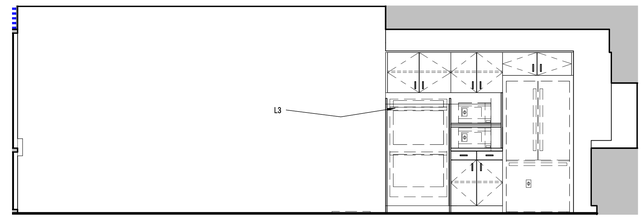

4 IE RM 2138 BREAKROOM / VENDING - FINISHES
SCALE: 3/8" = 1'-0"

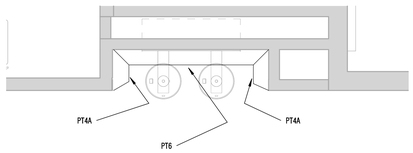

5 ROOM 3153 FOUNTAIN -CALLOUT
SCALE: 1/2" = 1'-0"

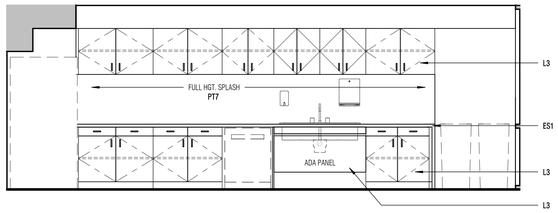

6 IE RM 2138 BREAKROOM / VENDING - B FINISHES
SCALE: 3/8" = 1'-0"

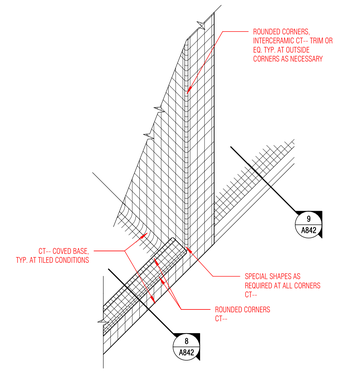

7 FD SHOWER TILE AXON
SCALE: 1" = 1'-0"

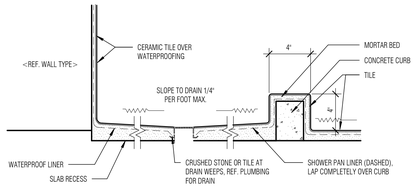

8 FD SHOWER TILE CURB
SCALE: 1" = 1'-0"

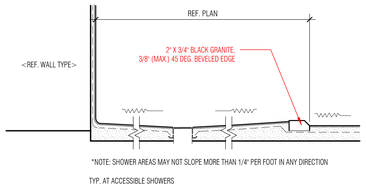

9 FD SHOWER TILE ROLL-IN
SCALE: 1" = 1'-0"

BRINKLEY SARGENT WIGINTON ARCHITECTS

Architect: Brinkley Sargent Wigginton Architects (972) 960-9970
Landscape: Kendall Landscape Architecture (214) 739-3226
Structural: L.A. Fuess Partners, Inc (214) 593-1118
MEP: M-E Engineers (214) 741-1589
Civil: KSA Engineers, Inc (903) 236-7700
Technology: M-E Engineers (303) 421-6656

LONGVIEW POLICE DEPARTMENT

518 W. SOUTH ST. LONGVIEW, TEXAS 75601

HISTORY

#	DATE	DESCRIPTION

08/19/2020

FINISH DETAILS, ENLARGED PLANS & ELEVATIONS

21719
08/19/2020

A842

BID ISSUE

8/19/2020 4:28:29 PM

D:\Revit Locals\Pb_CENTRAL_A19_Sacramer_08-18-2020.rvt

© 2020 Brinkley Sargent Wigginton Architects, Inc.

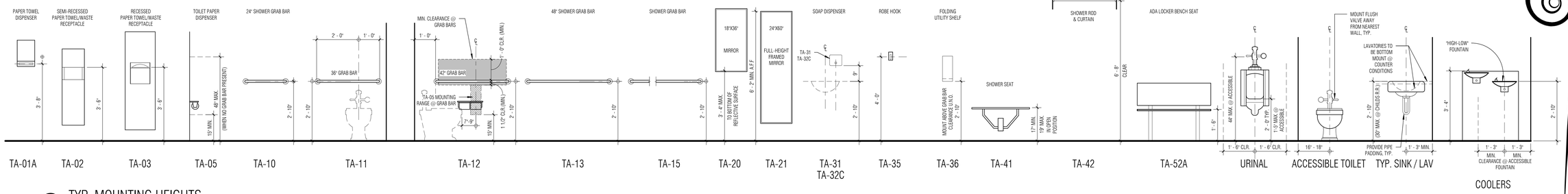

1 TYP. MOUNTING HEIGHTS

SCALE: 1/2" = 1'-0"

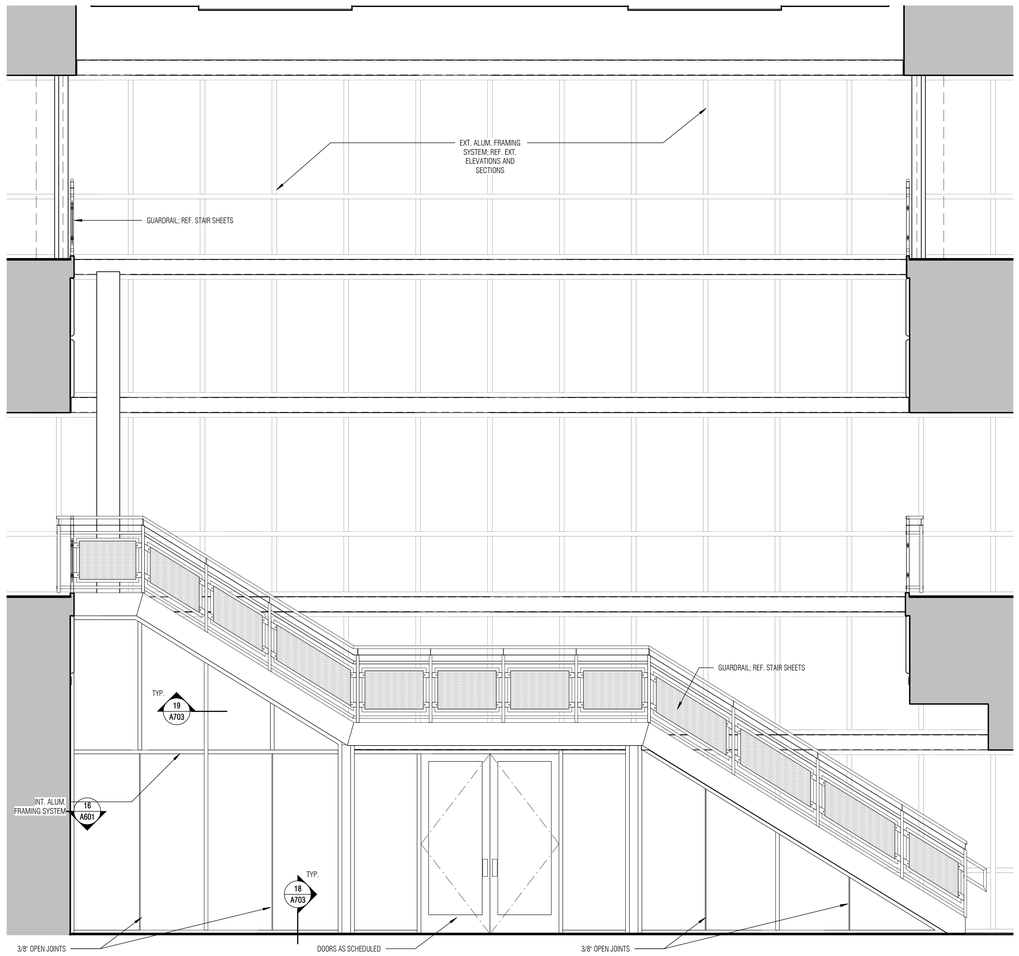

2 IE ATRIUM - A

SCALE: 3/8" = 1'-0"

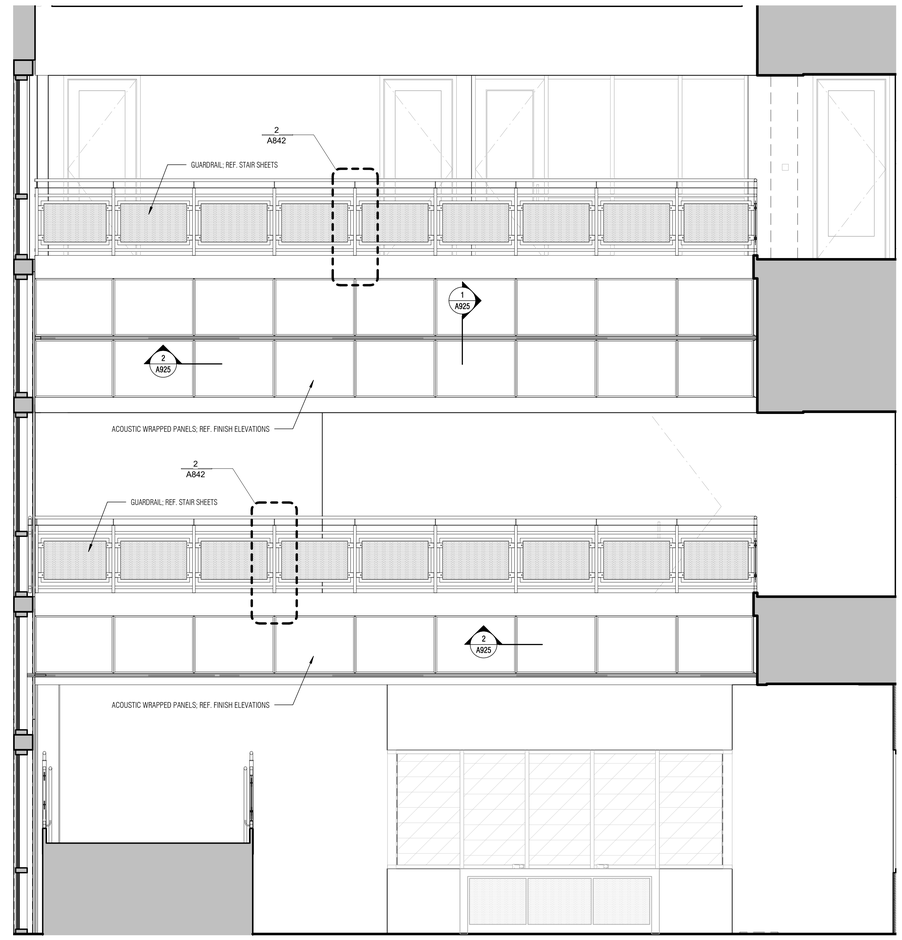

3 IE ATRIUM - B

SCALE: 3/8" = 1'-0"

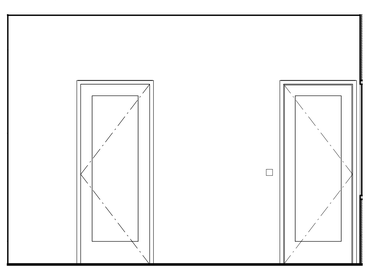

4 IE 1005 LOBBY - B

SCALE: 3/8" = 1'-0"

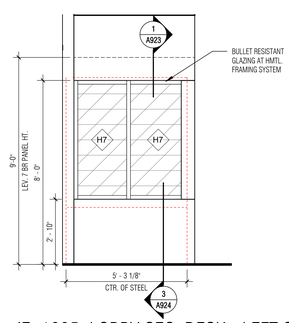

5 IE 1005 LOBBY SEC. DESK - LEFT SIDE

SCALE: 3/8" = 1'-0"

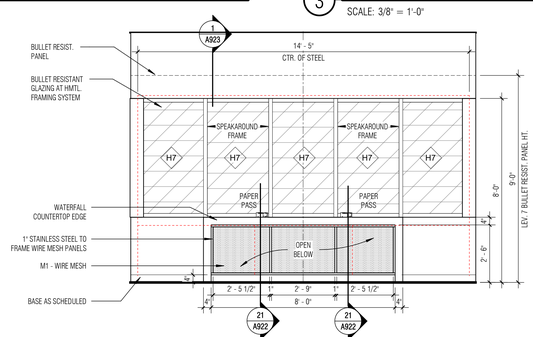

6 IE 1005 LOBBY SEC. DESK - FRONT SIDE

SCALE: 3/8" = 1'-0"

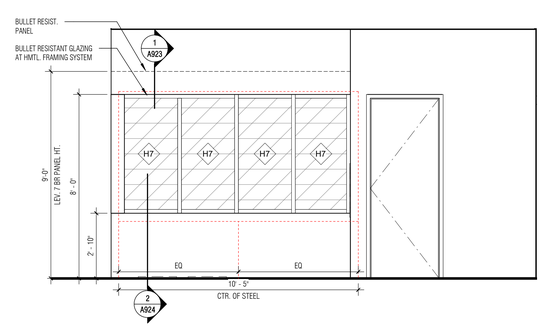

7 IE 1005 LOBBY SEC. DESK - RIGHT SIDE

SCALE: 3/8" = 1'-0"

GLAZING SCHEDULE (INTERIOR)

NO.	TYPE
A	1/4" CLEAR TEMPERED
AF	FROSTED
B	3/8" CLEAR TEMPERED
L	1/2" CLEAR TEMPERED
M	IMPACT RESISTANT GLAZING
H3	BULLET RESISTANT GLAZING, LEVEL 3
H7	BULLET RESISTANT GLAZING, LEVEL 7
HM	STEEL SECURITY MESH
STL	1/4" STEEL PLATE
W	INTERIOR INSULATED GLAZING
WF	INTERIOR INSULATED GLAZING, FROSTED (#3)
WM	INTERIOR INSULATED GLAZING, COLOR LAMINATED FOR IMPACT RESISTANCE AND OPACITY

SHEET NOTES:
1. ALL INTERIOR GLAZING TYPE 'A' UNLESS NOTED OTHERWISE.
2. REF. TO DETAIL 5/A703 FOR ALL INTERIOR GLAZING UNLESS NOTED OTHERWISE.

LONGVIEW POLICE DEPARTMENT

518 W. SOUTH ST. LONGVIEW, TEXAS 75601

Architect: Brinkley Sargent Wigginton Architects (972) 960-9970
Landscape: Kendall Landscape Architecture (214) 739-3226
Structural: L.A. Fuess Partners, Inc (214) 593-1118
MEP: M-E Engineers (214) 741-1589
Civil: KSA Engineers, Inc (903) 236-7700
Technology: M-E Engineers (303) 421-6656

BRINKLEY SARGENT WIGGINTON ARCHITECTS

HISTORY

#	DATE	DESCRIPTION

08/19/2020

INT. ELEVATIONS

BID ISSUE

21719
08/19/2020
A901

5/18/2020 4:30:28 PM

D:\Revit Locals\Rfp_CENTRAL_R19_Scanner_08-18-2020.rvt

© 2020 Brinkley Sargent Wigginton Architects, Inc.

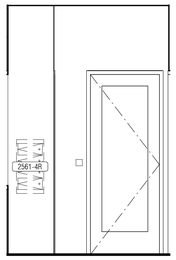

1 IE 1005 LOBBY CORRIDOR - B

SCALE: 3/8" = 1'-0"

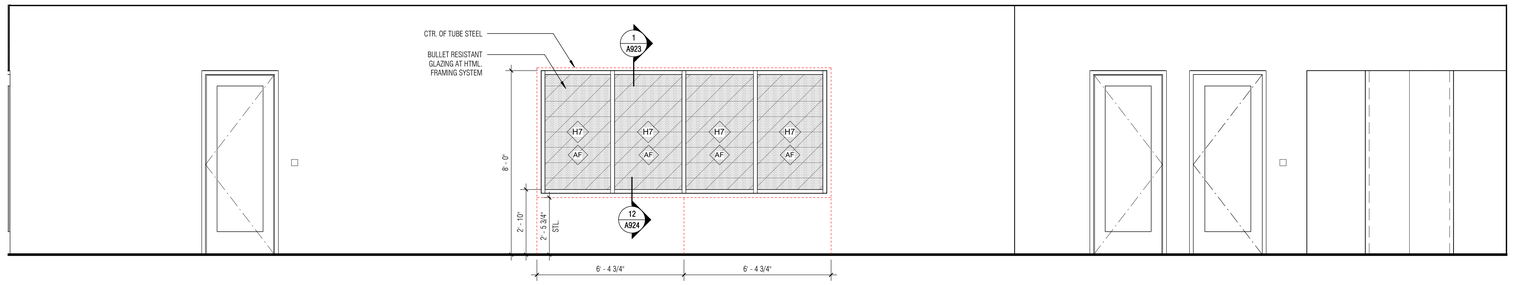

2 IE 1005 LOBBY - C

SCALE: 3/8" = 1'-0"

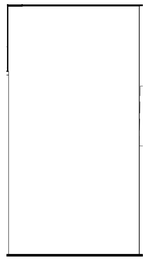

3 IE 1005 LOBBY NEAR ELEV.

SCALE: 3/8" = 1'-0"

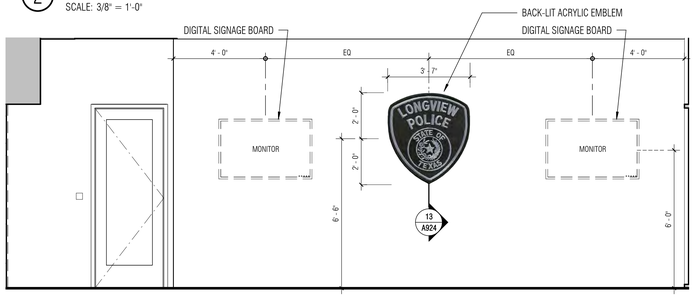

4 IE 1005 LOBBY - D

SCALE: 3/8" = 1'-0"

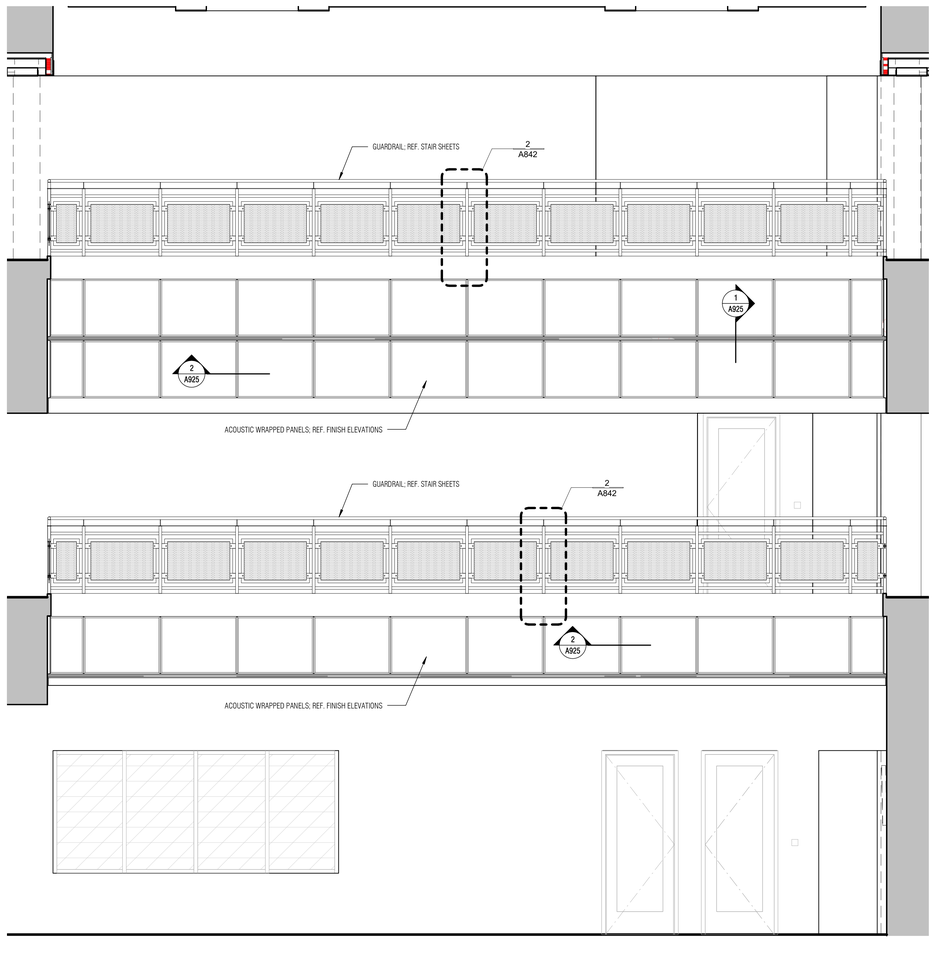

5 IE ATRIUM - C

SCALE: 3/8" = 1'-0"

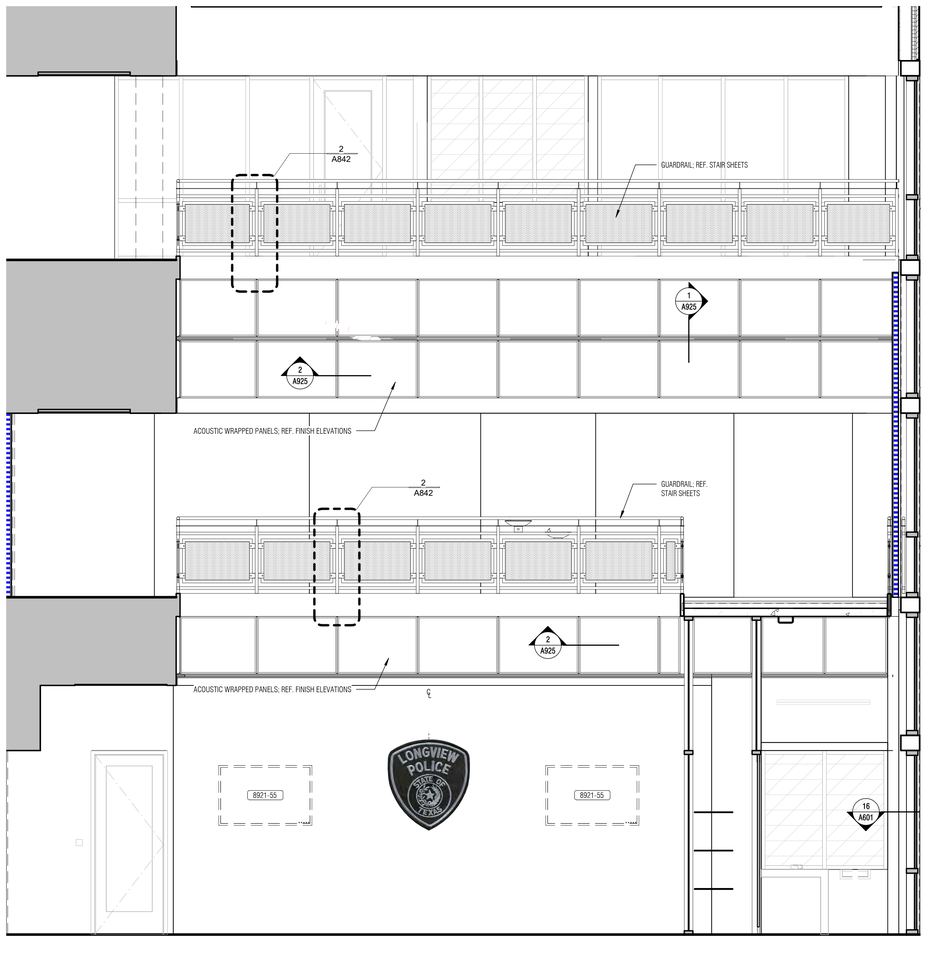

6 IE ATRIUM - D

SCALE: 3/8" = 1'-0"

GLAZING SCHEDULE (INTERIOR)

NO.	TYPE
A	1/4" CLEAR TEMPERED
AF	FROSTED
B	3/8" CLEAR TEMPERED
L	1/2" CLEAR TEMPERED
M	IMPACT RESISTANT GLAZING
H3	BULLET RESISTANT GLAZING, LEVEL 3
H7	BULLET RESISTANT GLAZING, LEVEL 7
HM	STEEL SECURITY MESH
STL	1/4" STEEL PLATE
W	INTERIOR INSULATED GLAZING
WF	INTERIOR INSULATED GLAZING, FROSTED (#3)
WM	INTERIOR INSULATED GLAZING, COLOR LAMINATED FOR IMPACT RESISTANCE AND OPACITY

SHEET NOTES:
1. ALL INTERIOR GLAZING TYPE 'A' UNLESS NOTED OTHERWISE.
2. REF. TO DETAIL 5/A703 FOR ALL INTERIOR GLAZING UNLESS NOTED OTHERWISE.

Architect: Brinkley Sargent Wigginton Architects (972) 960-9970
Landscape: Kendall Landscape Architecture (214) 739-3226
Structural: L.A. Fuess Partners, Inc (214) 593-1118
MEP: M-E Engineers (214) 741-1589
Civil: KSA Engineers, Inc (903) 236-7700
Technology: M-E Engineers (303) 421-6656

BRINKLEY SARGENT WIGGINTON ARCHITECTS

LONGVIEW POLICE DEPARTMENT

518 W. SOUTH ST. LONGVIEW, TEXAS 75601

HISTORY

#	DATE	DESCRIPTION

REGISTERED ARCHITECT DONALD R. SARGENT 9941 STATE OF TEXAS

08/19/2020

INT. ELEVATIONS

BID ISSUE

21719

08/19/2020

A902

D:\Revit Local\Rfp_CENTRAL_A19_Scanner_08-18-2020.rvt

8/18/2020 4:31:19 PM

© 2020 Brinkley Sargent Wigginton Architects, Inc.

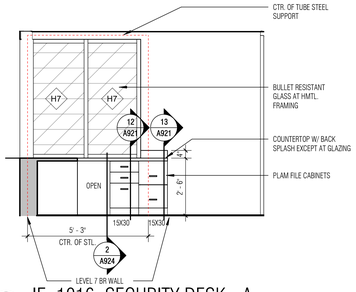

1 IE 1016 SECURITY DESK - A
SCALE: 3/8" = 1'-0"

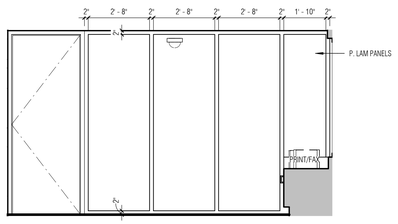

2 IE 1016 SECURITY DESK - B
SCALE: 3/8" = 1'-0"

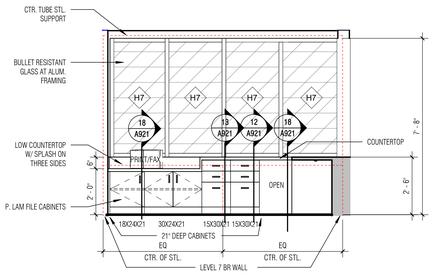

3 IE 1016 SECURITY DESK - C
SCALE: 3/8" = 1'-0"

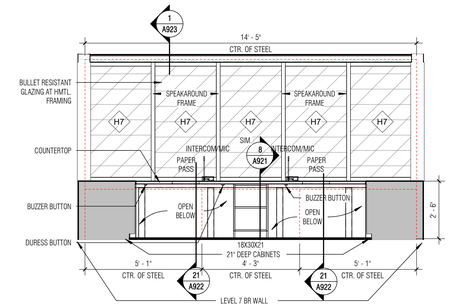

4 IE 1016 SECURITY DESK - D
SCALE: 3/8" = 1'-0"

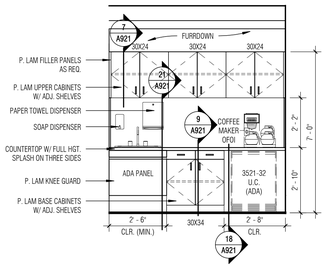

5 IE 1015 COFFEE - C
SCALE: 3/8" = 1'-0"

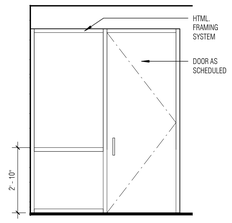

6 IE 1012 CORRIDOR - B
SCALE: 3/8" = 1'-0"

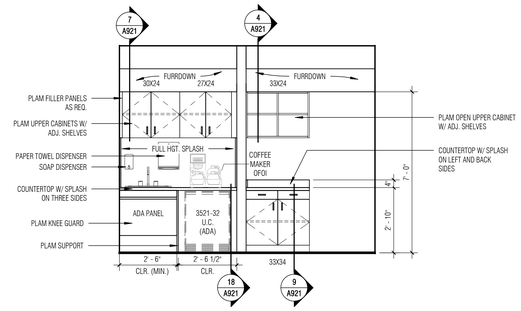

7 IE 1022 PHOTO / FINGERPRINT - B
SCALE: 3/8" = 1'-0"

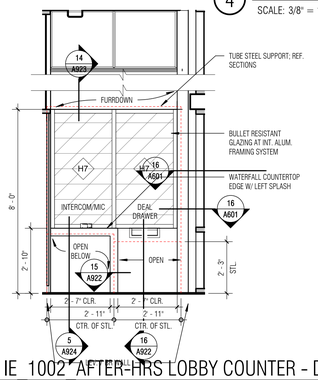

8 IE 1002 AFTER-HRS LOBBY COUNTER - D
SCALE: 3/8" = 1'-0"

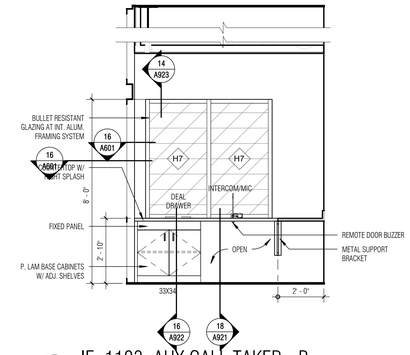

9 IE 1103 AUX CALL TAKER - B
SCALE: 3/8" = 1'-0"

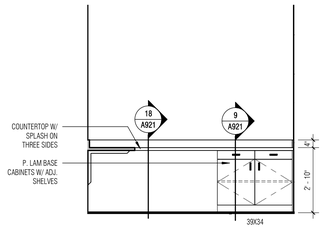

10 IE 1103 AUX CALL TAKER - C
SCALE: 3/8" = 1'-0"

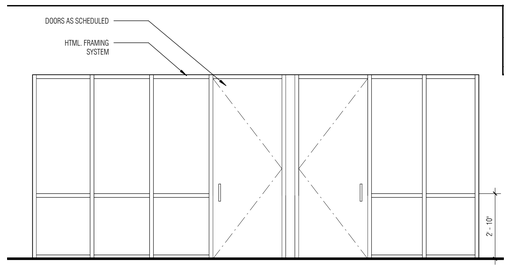

11 IE 1102 COMM. CENTER - B
SCALE: 3/8" = 1'-0"

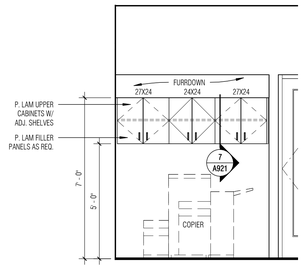

12 IE 1102 COMM. CENTER PRINTER - C
SCALE: 3/8" = 1'-0"

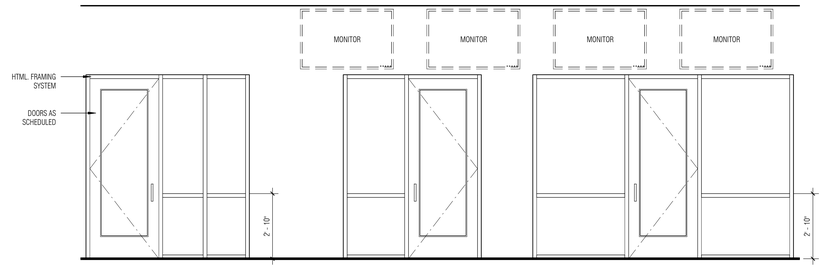

13 IE 1102 COMM. CENTER GLAZING - C
SCALE: 3/8" = 1'-0"

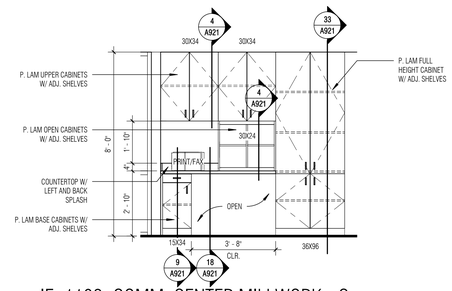

14 IE 1102 COMM. CENTER MILLWORK - C
SCALE: 3/8" = 1'-0"

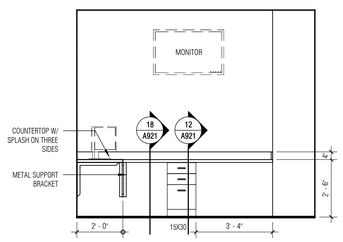

15 IE 1106 ADMIN. ASST. - C
SCALE: 3/8" = 1'-0"

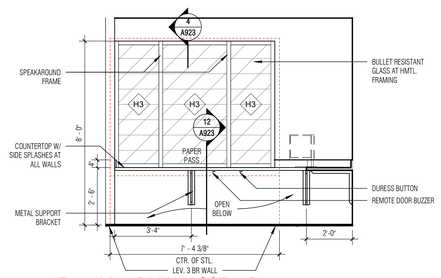

16 IE 1106 ADMIN. ASST. - B
SCALE: 3/8" = 1'-0"

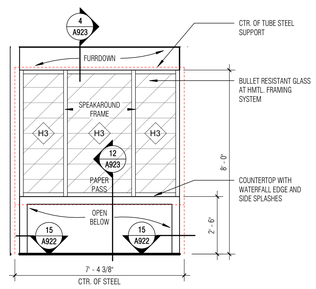

17 IE 1101 VESTIBULE - D
SCALE: 3/8" = 1'-0"

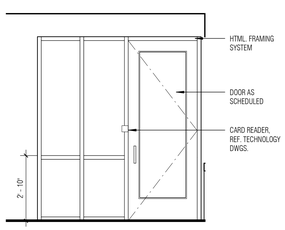

18 IE 1101 VESTIBULE - C
SCALE: 3/8" = 1'-0"

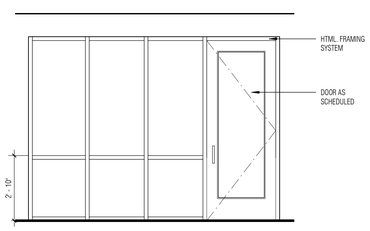

19 IE 1111 CORRIDOR - D
SCALE: 3/8" = 1'-0"

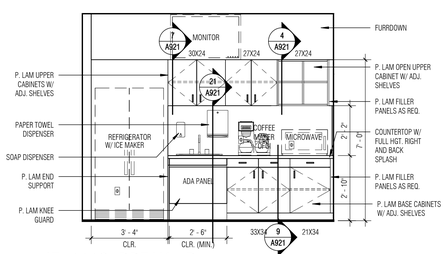

20 IE 1112 BREAK - D
SCALE: 3/8" = 1'-0"

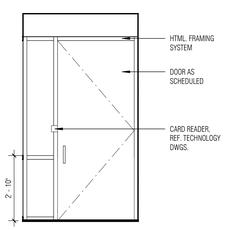

21 IE 1113 CORRIDOR - D
SCALE: 3/8" = 1'-0"

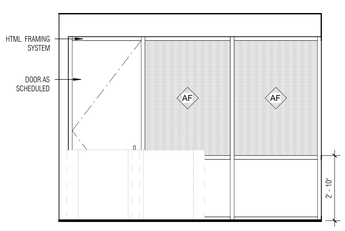

22 IE 1113 CORRIDOR - C
SCALE: 3/8" = 1'-0"

GLAZING SCHEDULE (INTERIOR)

NO.	TYPE
A	1/4" CLEAR TEMPERED
AF	FROSTED
B	3/8" CLEAR TEMPERED
L	1/2" CLEAR TEMPERED
M	IMPACT RESISTANT GLAZING
H3	BULLET RESISTANT GLAZING, LEVEL 3
H7	BULLET RESISTANT GLAZING, LEVEL 7
HM	STEEL SECURITY MESH
STL	1/4" STEEL PLATE
W	INTERIOR INSULATED GLAZING
WF	INTERIOR INSULATED GLAZING, FROSTED (#3)
WM	INTERIOR INSULATED GLAZING, COLOR LAMINATED FOR IMPACT RESISTANCE AND OPACITY

SHEET NOTES:
1. ALL INTERIOR GLAZING TYPE 'A' UNLESS NOTED OTHERWISE.
2. REF. TO DETAIL 5/A703 FOR ALL INTERIOR GLAZING UNLESS NOTED OTHERWISE.

BRINKLEY SARGENT WIGGINTON ARCHITECTS

Architect: Brinkley Sargent Wigginton Architects (972) 960-9970
Landscape: Kendall Landscape Architecture (214) 739-3226
Structural: L.A. Fuess Partners, Inc (214) 593-1118
MEP: M-E Engineers (214) 741-1589
Civil: KSA Engineers, Inc (903) 236-7700
Technology: M-E Engineers (303) 421-6656

LONGVIEW POLICE DEPARTMENT

518 W. SOUTH ST. LONGVIEW, TEXAS 75601

HISTORY		
#	DATE	DESCRIPTION

08/19/2020

INT. ELEVATIONS

BID ISSUE

21719
08/19/2020
A903

6/15/2020 4:32:01 PM

D:\Revit Locals\LPD_CENTRAL_v19_boomer_08-18-2020.rvt

© 2020 Brinkley Sargent Wigginton Architects, Inc.

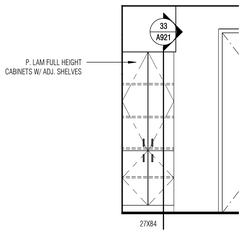

1 IE 1117/1118 TOILET - D
SCALE: 3/8" = 1'-0"

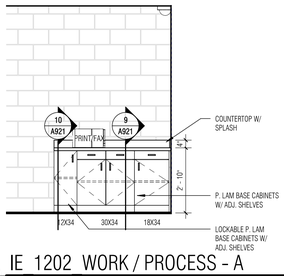

2 IE 1202 WORK / PROCESS - A
SCALE: 3/8" = 1'-0"

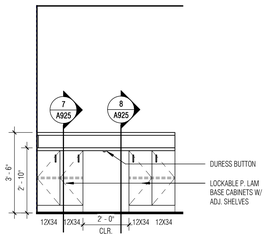

3 IE 1202 WORK / PROCESS COUNTER BACK
SCALE: 3/8" = 1'-0"

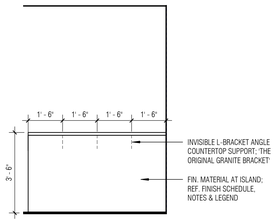

4 IE 1202 WORK / PROCESS COUNTER FRONT
SCALE: 3/8" = 1'-0"

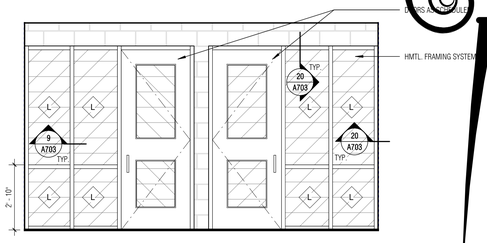

5 IE 1202 WORK / PROCESS - D
SCALE: 3/8" = 1'-0"

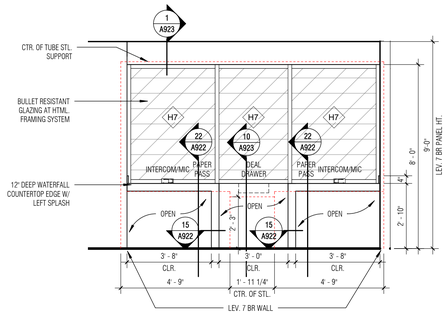

6 IE 1301 RECORDS COUNTER
SCALE: 3/8" = 1'-0"

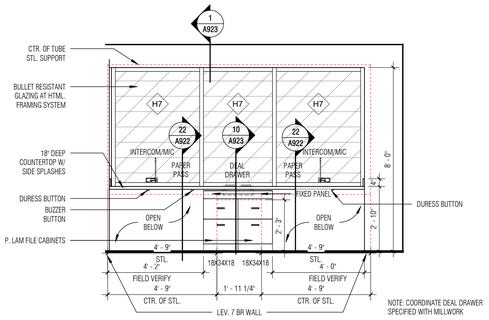

7 IE 1303 RECORDS CLERKS COUNTER TO REC. COUNTER
SCALE: 3/8" = 1'-0"

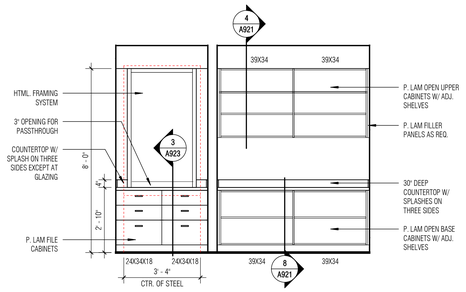

8 IE 1307 CENTRAL MAIL / OFF. COUNTER
SCALE: 3/8" = 1'-0"

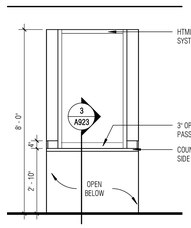

9 IE 1303 REC. CLERKS COUNTER
SCALE: 3/8" = 1'-0"

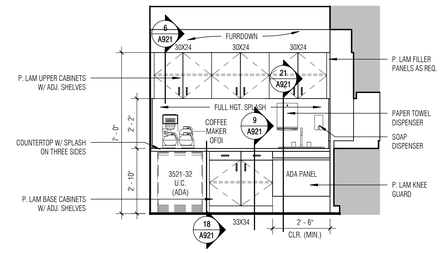

10 IE 1304 COPY/WORK/COFFEE - A
SCALE: 3/8" = 1'-0"

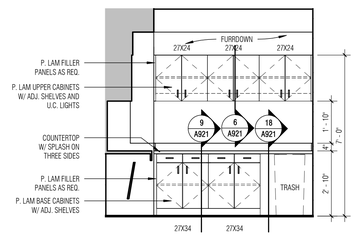

11 IE 1304 COPY/WORK/COFFEE - B
SCALE: 3/8" = 1'-0"

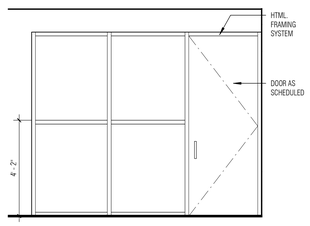

12 IE 1303 RECORDS CLERKS - D
SCALE: 3/8" = 1'-0"

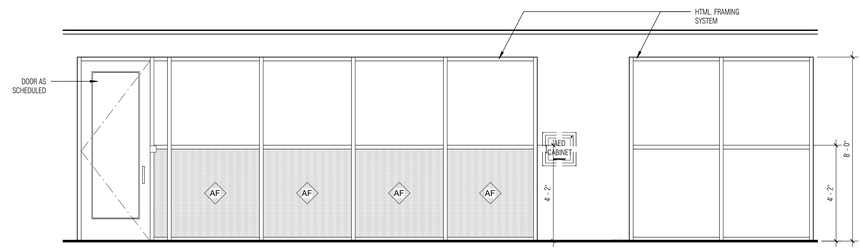

13 IE 1306 CORRIDOR - A
SCALE: 3/8" = 1'-0"

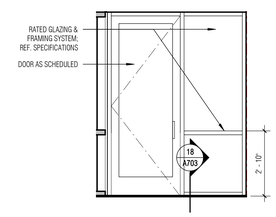

14 IE 1318 STAFF VEST. - A
SCALE: 3/8" = 1'-0"

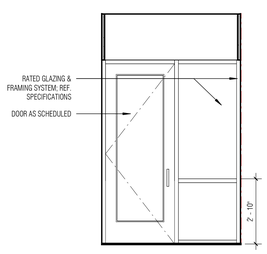

15 IE 1320 CORRIDOR - A
SCALE: 3/8" = 1'-0"

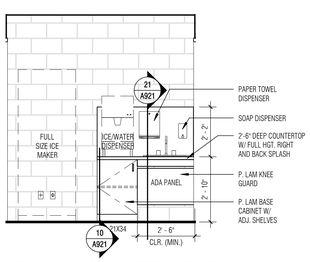

16 IE 1316 ICE/WATER/UTILITY - B
SCALE: 3/8" = 1'-0"

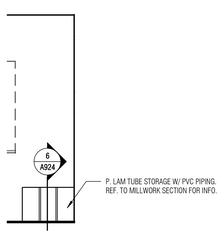

17 IE 1313 HONOR GUARD TUBE STOR.
SCALE: 3/8" = 1'-0"

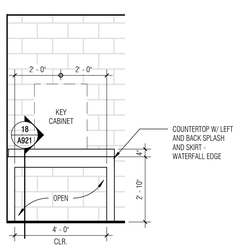

18 IE 1314 PATROL LOCKERS - A
SCALE: 3/8" = 1'-0"

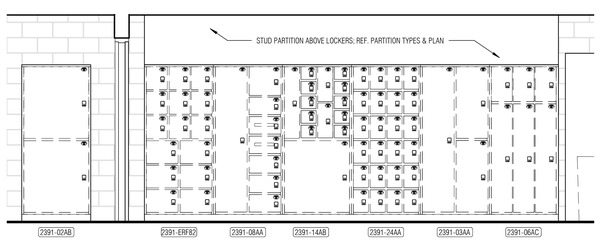

19 IE 1401 EVID. WORK/LOCKERS - B
SCALE: 3/8" = 1'-0"

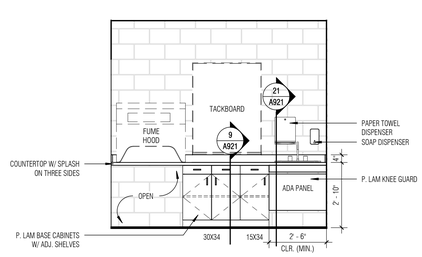

20 IE 1401 EVID. WORK/LOCKERS - C
SCALE: 3/8" = 1'-0"

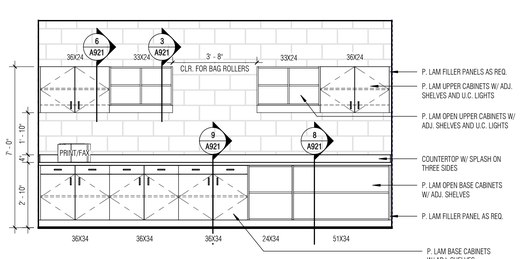

21 IE 1401 EVID. WORK/LOCKERS - D
SCALE: 3/8" = 1'-0"

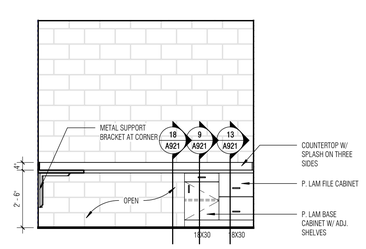

22 IE 1402 MAJOR CASE / EVID. WORK RM. - A
SCALE: 3/8" = 1'-0"

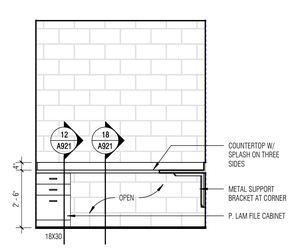

23 IE 1402 MAJOR CASE / EVID. WORK RM. - D
SCALE: 3/8" = 1'-0"

GLAZING SCHEDULE (INTERIOR)

NO.	TYPE
A	1/4" CLEAR TEMPERED
AF	FROSTED
B	3/8" CLEAR TEMPERED
L	1/2" CLEAR TEMPERED
M	IMPACT RESISTANT GLAZING
H3	BULLET RESISTANT GLAZING, LEVEL 3
H7	BULLET RESISTANT GLAZING, LEVEL 7
HM	STEEL SECURITY MESH
STL	1/4" STEEL PLATE
W	INTERIOR INSULATED GLAZING
WF	INTERIOR INSULATED GLAZING, FROSTED (#3)
WM	INTERIOR INSULATED GLAZING, COLOR LAMINATED FOR IMPACT RESISTANCE AND OPACITY

SHEET NOTES:
1. ALL INTERIOR GLAZING TYPE 'A' UNLESS NOTED OTHERWISE.
2. REF. TO DETAIL 5/A703 FOR ALL INTERIOR GLAZING UNLESS NOTED OTHERWISE.

BRINKLEY SARGENT WIGINTON ARCHITECTS

Architect: Brinkley Sargent Wigginton Architects (972) 960-9970
Landscape: Kendall Landscape Architecture (214) 739-3226
Structural: L.A. Fuess Partners, Inc (214) 593-1118
MEP: M-E Engineers (214) 741-1589
Civil: KSA Engineers, Inc (903) 236-7700
Technology: M-E Engineers (303) 421-6656

LONGVIEW POLICE DEPARTMENT

518 W. SOUTH ST. LONGVIEW, TEXAS 75601

HISTORY

#	DATE	DESCRIPTION

08/19/2020

INT. ELEVATIONS

BID ISSUE

21719
08/19/2020
A904

8/19/2020 4:33:03 PM

E:\Revit Local\PD_CENTRAL_A19_brockmer_d8-19-2020.rvt

© 2020 Brinkley Sargent Wigginton Architects, Inc.

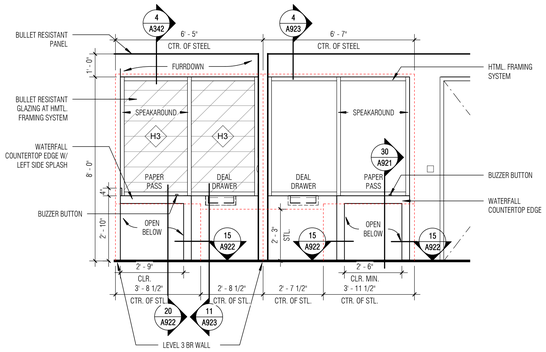

1 IE_1011/1403 PUBLIC AND STAFF SERVICE WINDOWS - A
SCALE: 3/8" = 1'-0"

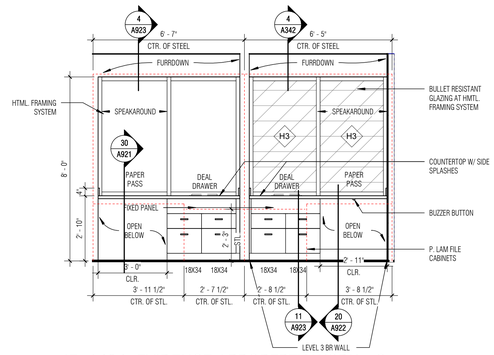

2 IE_1404 EVIDENCE / PROPERTY WORK - C
SCALE: 3/8" = 1'-0"

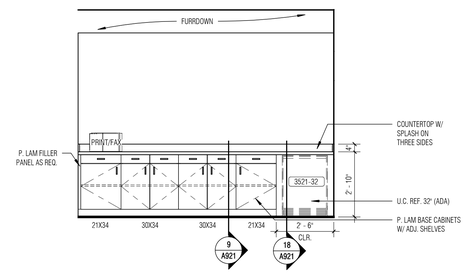

3 IE_1404 EVIDENCE / PROPERTY WORK - D
SCALE: 3/8" = 1'-0"

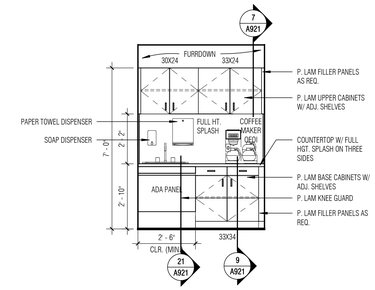

4 IE_1408 COFFEE - A
SCALE: 3/8" = 1'-0"

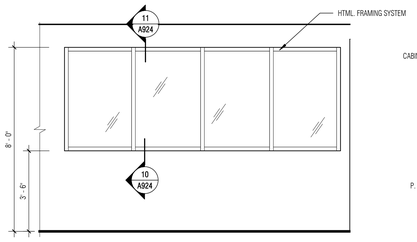

5 IE_1404 EVIDENCE /PROPERTY WORK - A
SCALE: 3/8" = 1'-0"

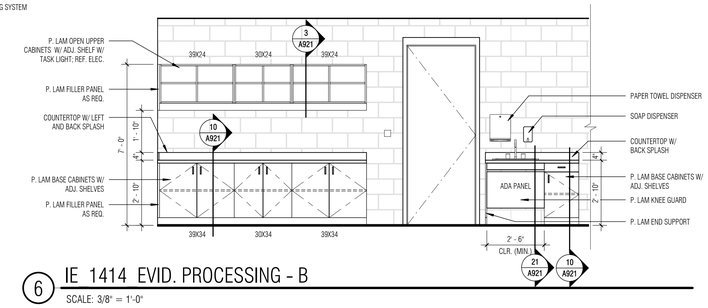

6 IE_1414 EVID. PROCESSING - B
SCALE: 3/8" = 1'-0"

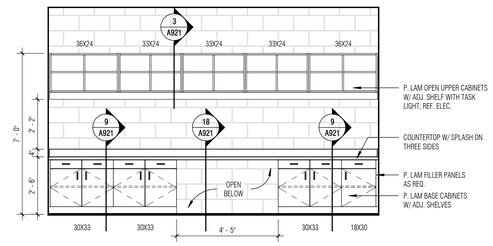

7 IE_1414 EVID. PROCESSING - C
SCALE: 3/8" = 1'-0"

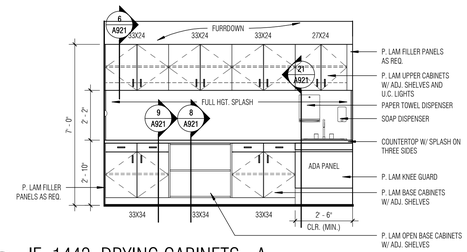

8 IE_1442 DRYING CABINETS - A
SCALE: 3/8" = 1'-0"

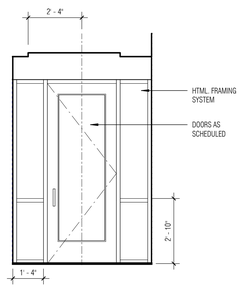

9 IE_1443 CORRIDOR - B
SCALE: 3/8" = 1'-0"

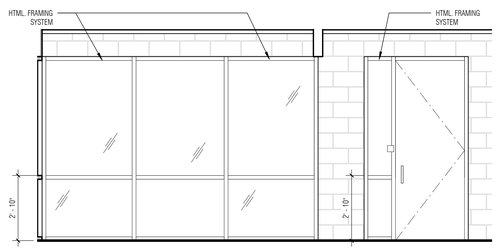

10 IE_1501 CORRIDOR - A
SCALE: 3/8" = 1'-0"

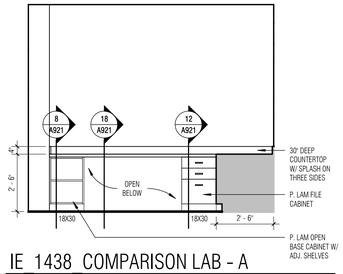

11 IE_1438 COMPARISON LAB - A
SCALE: 3/8" = 1'-0"

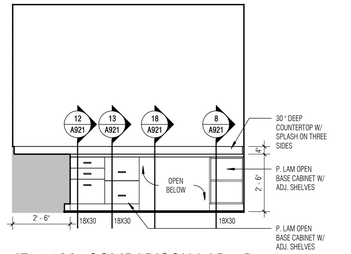

12 IE_1438 COMPARISON LAB - B
SCALE: 3/8" = 1'-0"

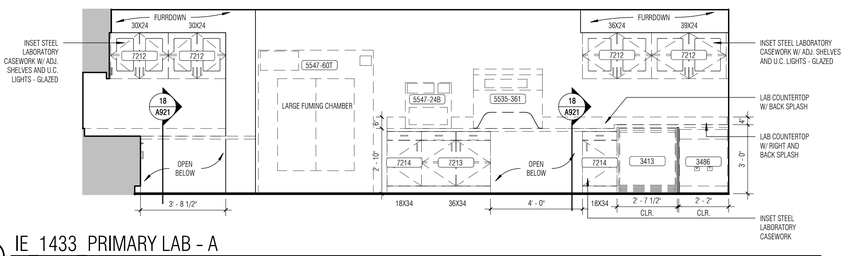

13 IE_1433 PRIMARY LAB - A
SCALE: 3/8" = 1'-0"

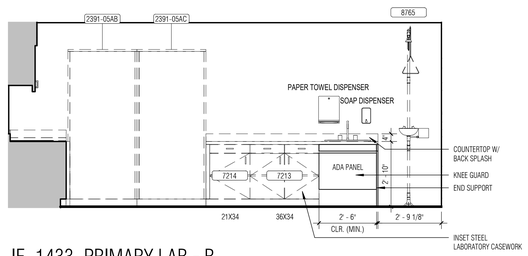

14 IE_1433 PRIMARY LAB - B
SCALE: 3/8" = 1'-0"

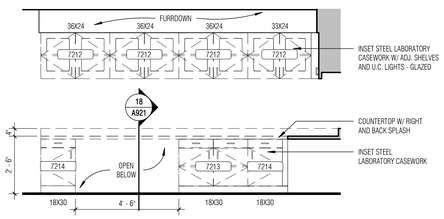

15 IE_1433 PRIMARY LAB - D
SCALE: 3/8" = 1'-0"

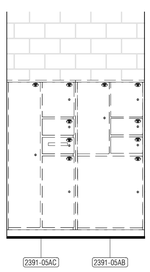

16 IE_1429 DESTRUCTION - D
SCALE: 3/8" = 1'-0"

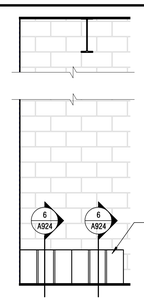

17 IE_1411 PROPERTY/STORAGE TUBE STOR.
SCALE: 3/8" = 1'-0"

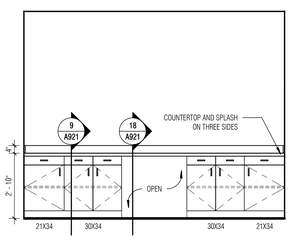

18 IE_1435 ALTERNATE LIGHT - C
SCALE: 3/8" = 1'-0"

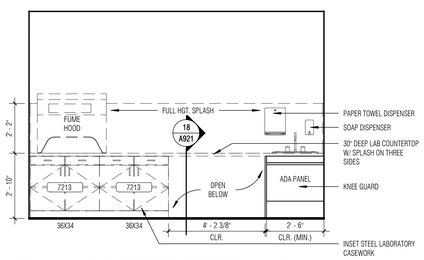

19 IE_1434 POWDER PROCESSING - D
SCALE: 3/8" = 1'-0"

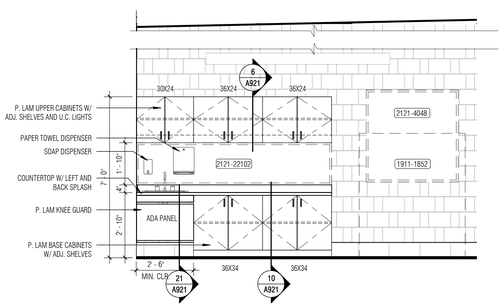

20 IE_1508 VEHICLE MAINT. BAY - A
SCALE: 3/8" = 1'-0"

GLAZING SCHEDULE (INTERIOR)

NO.	TYPE
A	1/4" CLEAR TEMPERED
AF	FROSTED
B	3/8" CLEAR TEMPERED
L	1/2" CLEAR TEMPERED
M	IMPACT RESISTANT GLAZING
H3	BULLET RESISTANT GLAZING, LEVEL 3
H7	BULLET RESISTANT GLAZING, LEVEL 7
HM	STEEL SECURITY MESH
STL	1/4" STEEL PLATE
W	INTERIOR INSULATED GLAZING
WF	INTERIOR INSULATED GLAZING, FROSTED (#3)
WM	INTERIOR INSULATED GLAZING, COLOR LAMINATED FOR IMPACT RESISTANCE AND OPACITY

SHEET NOTES:
1. ALL INTERIOR GLAZING TYPE 'A' UNLESS NOTED OTHERWISE.
2. REF. TO DETAIL 5/A703 FOR ALL INTERIOR GLAZING UNLESS NOTED OTHERWISE.

BRINKLEY SARGENT WIGINTON ARCHITECTS

Architect: Brinkley Sargent Wigginton Architects (972) 960-9970
Landscape: Kendall Landscape Architecture (214) 739-3226
Structural: L.A. Fuess Partners, Inc (214) 593-1118
MEP: M-E Engineers (214) 741-1589
Civil: KSA Engineers, Inc (903) 236-7700
Technology: M-E Engineers (303) 421-6656

LONGVIEW POLICE DEPARTMENT

518 W. SOUTH ST. LONGVIEW, TEXAS 75601

HISTORY

#	DATE	DESCRIPTION

08/19/2020

INT. ELEVATIONS

BID ISSUE

21719
08/19/2020

A905

8/19/2020 4:23:42 PM

E:\Revit Locals\PD_CENTRAL_A19_Jacobsen_08-19-2020.rvt

© 2020 Brinkley Sargent Wigginton Architects, Inc.

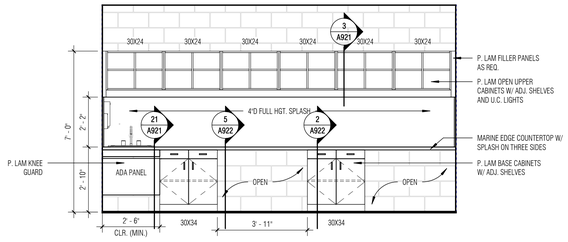

1 IE 1519 WEAPONS CLEANING - B

SCALE: 3/8" = 1'-0"

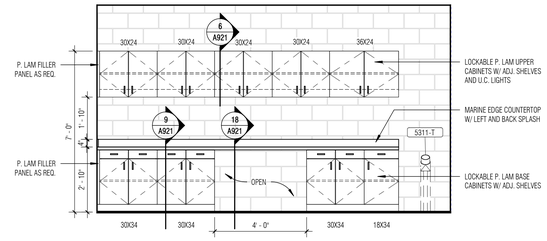

2 IE 1519 WEAPONS CLEANING - D

SCALE: 3/8" = 1'-0"

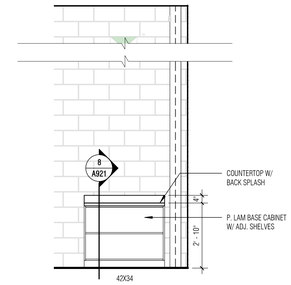

3 IE 1516 SWAT VEHICLE - B

SCALE: 3/8" = 1'-0"

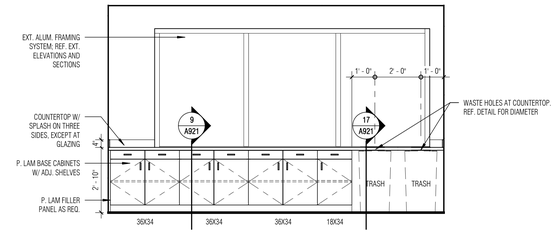

4 IE 2002 VESTIBULE - A

SCALE: 3/8" = 1'-0"

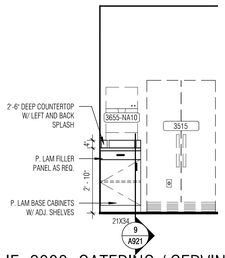

5 IE 2003 CATERING / SERVING - B

SCALE: 3/8" = 1'-0"

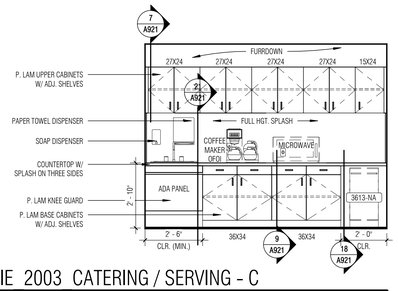

6 IE 2003 CATERING / SERVING - C

SCALE: 3/8" = 1'-0"

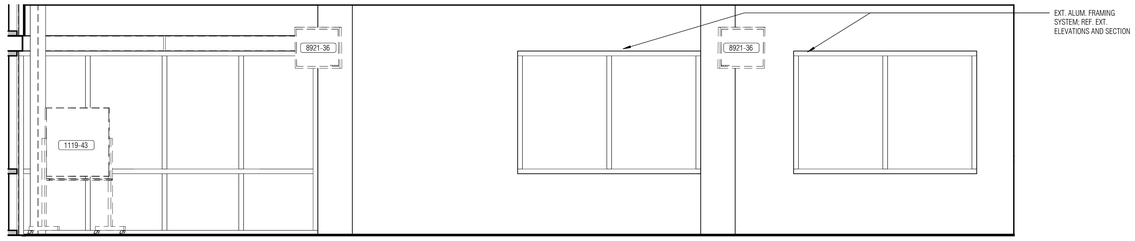

7 IE 2004 TRAINING / COMMUNITY ROOM - A

SCALE: 3/8" = 1'-0"

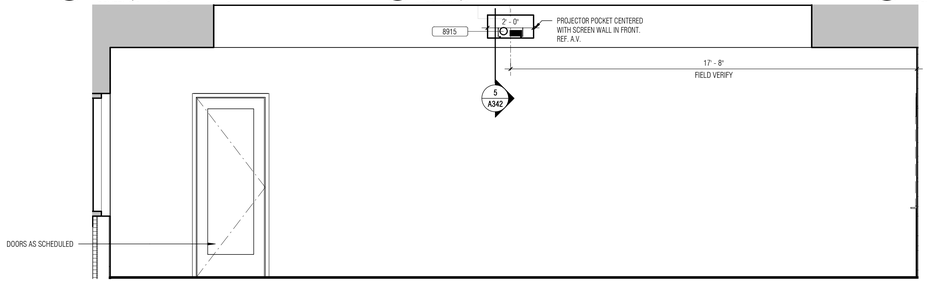

8 IE 2004 TRAINING / COMMUNITY ROOM - B

SCALE: 3/8" = 1'-0"

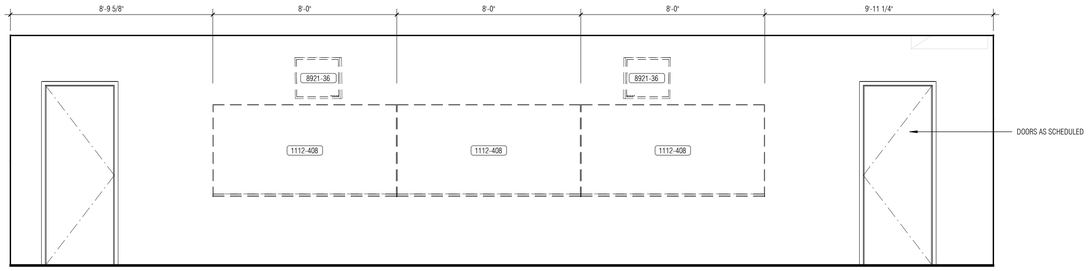

9 IE 2004 TRAINING / COMMUNITY ROOM - C

SCALE: 3/8" = 1'-0"

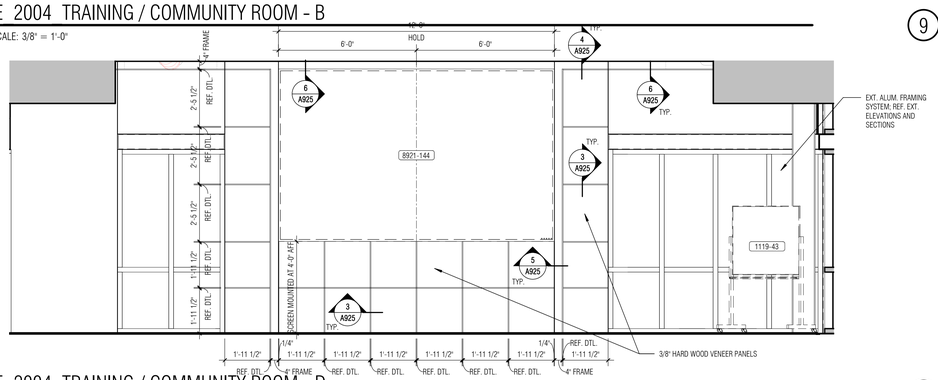

10 IE 2004 TRAINING / COMMUNITY ROOM - D

SCALE: 3/8" = 1'-0"

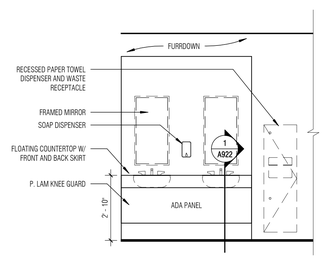

11 IE 2008 MEN'S - A

SCALE: 3/8" = 1'-0"

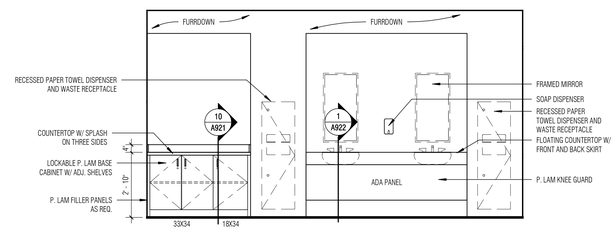

12 IE 2009 WOMEN'S - C

SCALE: 3/8" = 1'-0"

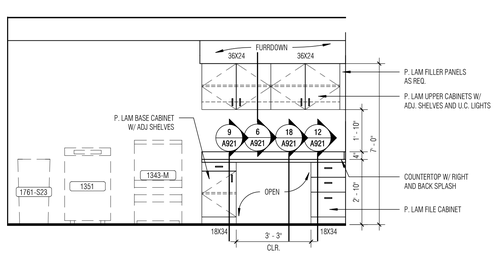

13 IE 2012 OFFICERS - A

SCALE: 3/8" = 1'-0"

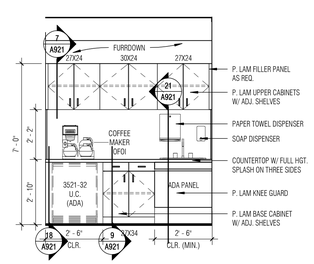

14 IE 2010 COFFEE - A

SCALE: 3/8" = 1'-0"

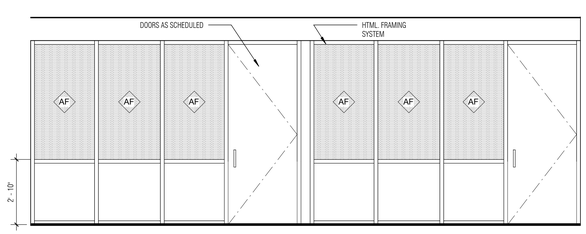

15 IE 2015 CORRIDOR - C

SCALE: 3/8" = 1'-0"

GLAZING SCHEDULE (INTERIOR)

NO.	TYPE
A	1/4" CLEAR TEMPERED
AF	FROSTED
B	3/8" CLEAR TEMPERED
L	1/2" CLEAR TEMPERED
M	IMPACT RESISTANT GLAZING
H3	BULLET RESISTANT GLAZING, LEVEL 3
H7	BULLET RESISTANT GLAZING, LEVEL 7
HM	STEEL SECURITY MESH
STL	1/4" STEEL PLATE
W	INTERIOR INSULATED GLAZING
WF	INTERIOR INSULATED GLAZING, FROSTED (#3)
WM	INTERIOR INSULATED GLAZING, COLOR LAMINATED FOR IMPACT RESISTANCE AND OPACITY

SHEET NOTES:
1. ALL INTERIOR GLAZING TYPE 'A' UNLESS NOTED OTHERWISE.
2. REF. TO DETAIL 5/A703 FOR ALL INTERIOR GLAZING UNLESS NOTED OTHERWISE.

Architect: Brinkley Sargent Wigginton Architects (972) 960-9970
Landscape: Kendall Landscape Architecture (214) 739-3226
Structural: L.A. Fuess Partners, Inc (214) 593-1118
MEP: M-E Engineers (214) 741-1589
Civil: KSA Engineers, Inc (903) 236-7700
Technology: M-E Engineers (303) 421-6636

BRINKLEY SARGENT WIGGINTON ARCHITECTS

LONGVIEW POLICE DEPARTMENT

518 W. SOUTH ST. LONGVIEW, TEXAS 75601

HISTORY		
#	DATE	DESCRIPTION

REGISTERED ARNOLD SARGENT WIGGINTON ARCHITECT 9941 STATE OF TEXAS
08/19/2020

INT. ELEVATIONS

BID ISSUE

21719

08/19/2020

A906

8/19/2020 4:34:31 PM
D:\Revit Locals\LPD_CENTRAL_v19_boonmeer_CR_18-2020.rvt

© 2020 Brinkley Sargent Wigginton Architects, Inc.

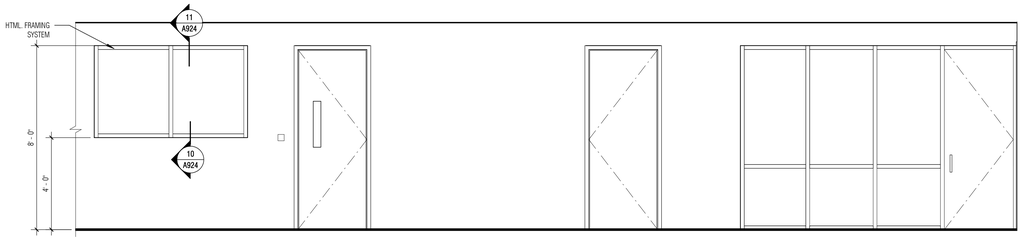

1 IE 2121 CORRIDOR - A
SCALE: 3/8" = 1'-0"

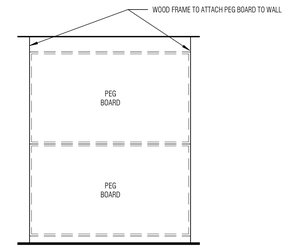

2 IE 2131 PEGBD WALL AT QRTRMTR
SCALE: 3/8" = 1'-0"

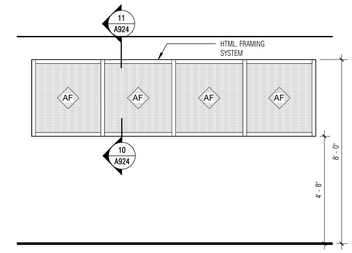

3 IE 2120 CORRIDOR - A
SCALE: 3/8" = 1'-0"

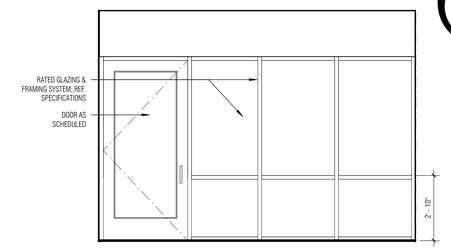

4 IE ST-02 LVL 2 STAFF STAIR LANDING - A
SCALE: 3/8" = 1'-0"

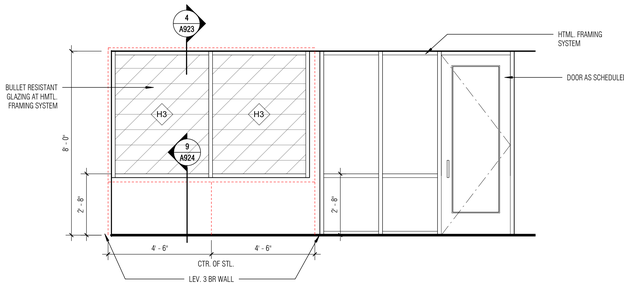

5 IE 2001 2ND FLOOR LOBBY - B
SCALE: 3/8" = 1'-0"

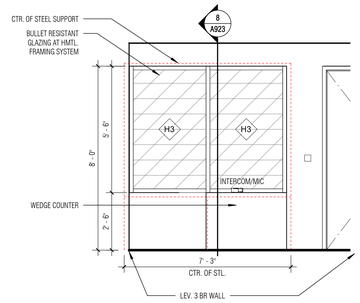

6 IE 2102 RECEPTION - A
SCALE: 3/8" = 1'-0"

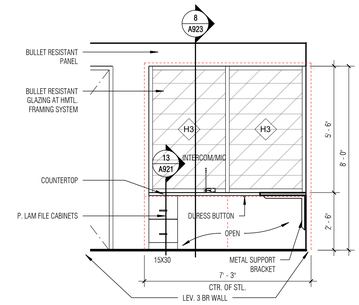

7 IE 2103 ADMIN. ASSIST. - C
SCALE: 3/8" = 1'-0"

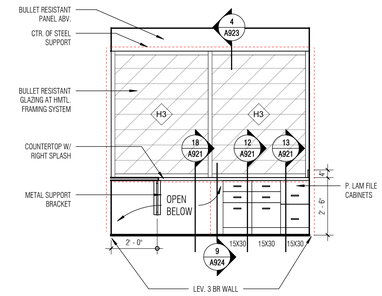

8 IE 2103 ADMIN. ASSIST. - D
SCALE: 3/8" = 1'-0"

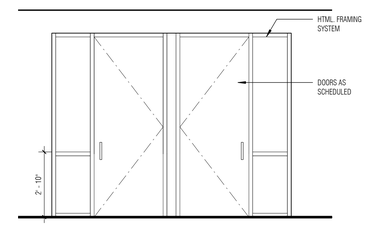

9 IE 2104 CORRIDOR - A
SCALE: 3/8" = 1'-0"

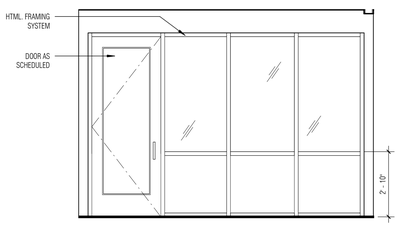

10 IE 2104 CORRIDOR - C
SCALE: 3/8" = 1'-0"

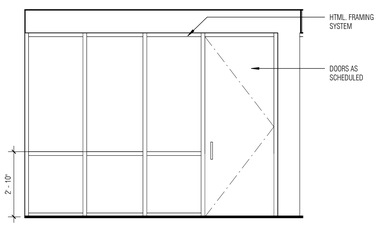

11 IE 2109 CORRIDOR - A
SCALE: 3/8" = 1'-0"

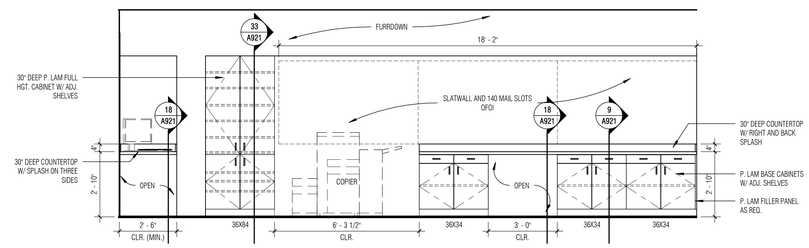

12 IE 2109 CORRIDOR - C
SCALE: 3/8" = 1'-0"

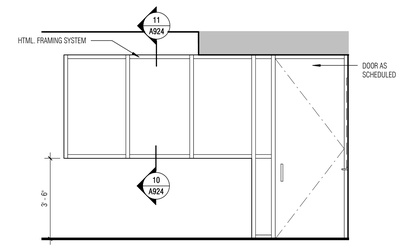

13 IE 2115 PLANNING RESEARCH - C
SCALE: 3/8" = 1'-0"

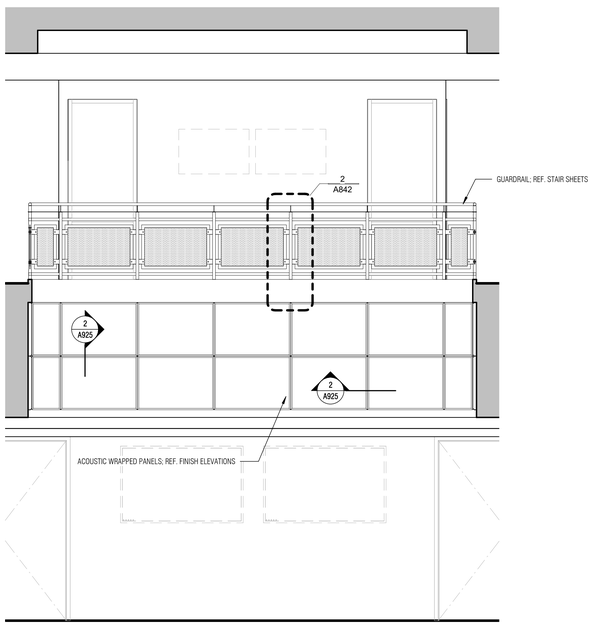

14 IE STAFF ATRIUM - A
SCALE: 3/8" = 1'-0"

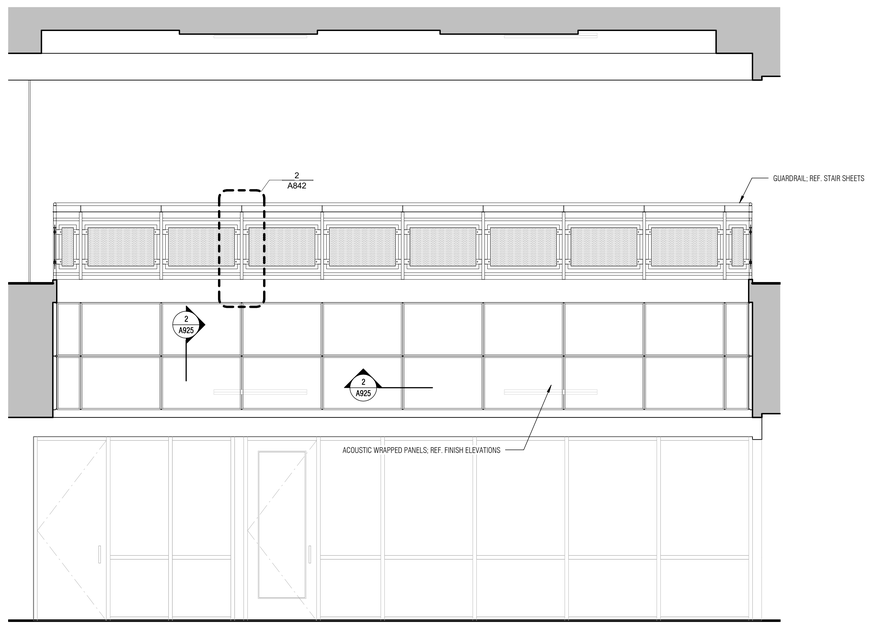

15 IE STAFF ATRIUM - B
SCALE: 3/8" = 1'-0"

GLAZING SCHEDULE (INTERIOR)

NO.	TYPE
A	1/4" CLEAR TEMPERED
AF	FROSTED
B	3/8" CLEAR TEMPERED
L	1/2" CLEAR TEMPERED
M	IMPACT RESISTANT GLAZING
H3	BULLET RESISTANT GLAZING, LEVEL 3
H7	BULLET RESISTANT GLAZING, LEVEL 7
HM	STEEL SECURITY MESH
STL	1/4" STEEL PLATE
W	INTERIOR INSULATED GLAZING
WF	INTERIOR INSULATED GLAZING, FROSTED (#3)
WM	INTERIOR INSULATED GLAZING, COLOR LAMINATED FOR IMPACT RESISTANCE AND OPACITY

SHEET NOTES:
1. ALL INTERIOR GLAZING TYPE 'A' UNLESS NOTED OTHERWISE.
2. REF. TO DETAIL 5/A703 FOR ALL INTERIOR GLAZING UNLESS NOTED OTHERWISE.

Architect: Brinkley Sargent Wigginton Architects (972) 960-9970
Landscape: Kendall Landscape Architecture (214) 739-3226
Structural: L.A. Fuess Partners, Inc (214) 593-1118
MEP: M-E Engineers (214) 741-1589
Civil: KSA Engineers, Inc (903) 236-7700
Technology: M-E Engineers (303) 421-6636

BRINKLEY SARGENT WIGINTON ARCHITECTS

LONGVIEW POLICE DEPARTMENT

518 W. SOUTH ST. LONGVIEW, TEXAS 75601

HISTORY

#	DATE	DESCRIPTION

08/19/2020

INT. ELEVATIONS

21719
08/19/2020

A907

BID ISSUE

8/19/2020 4:34:58 PM

E:\Revit Locals\LPD_CENTRAL_A19_Jacobsen_08-19-2020.rvt

© 2020 Brinkley Sargent Wigginton Architects, Inc.

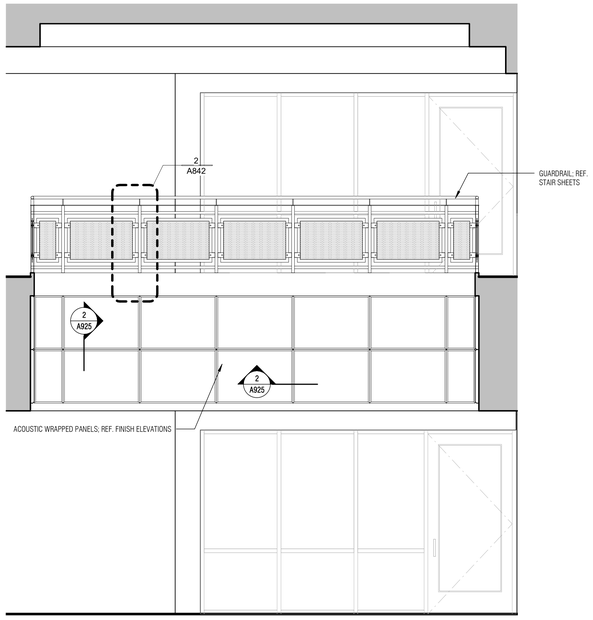

1 IE STAFF ATRIUM - C
SCALE: 3/8" = 1'-0"

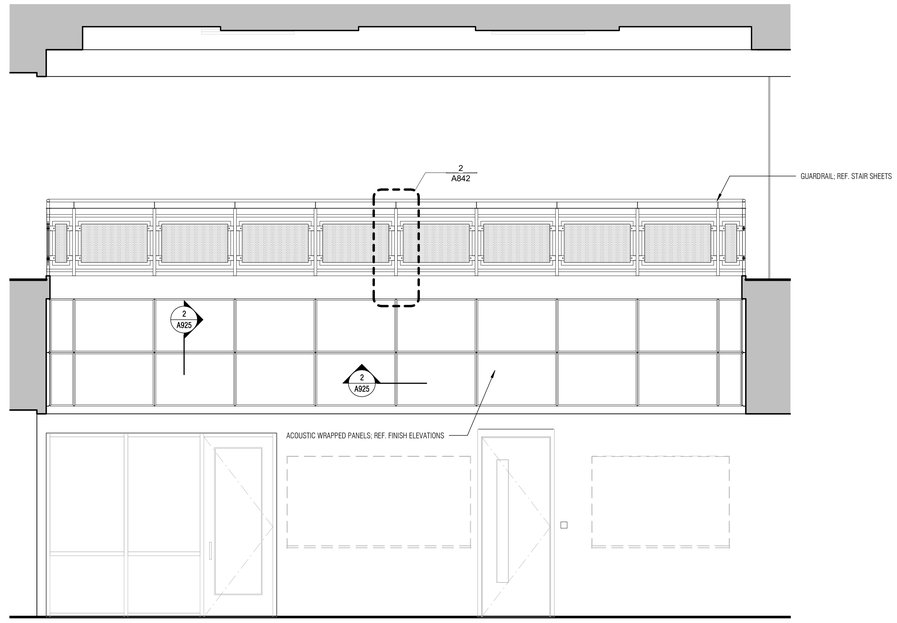

2 IE STAFF ATRIUM - D
SCALE: 3/8" = 1'-0"

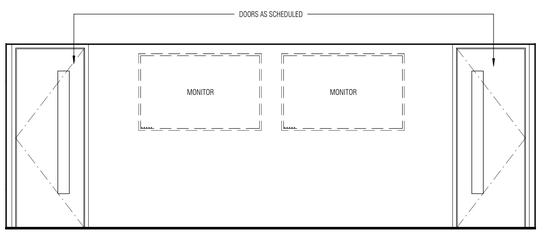

3 IE 2117 REPORT WRITING - A
SCALE: 3/8" = 1'-0"

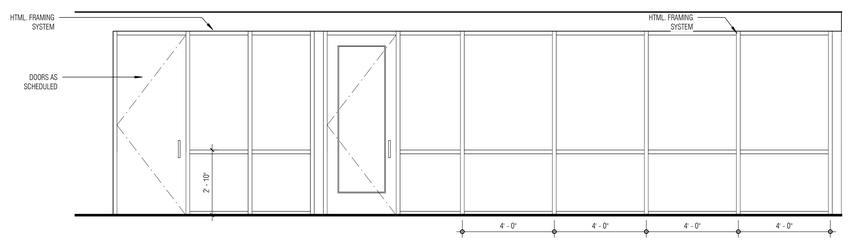

4 IE 2117 REPORT WRITING - B
SCALE: 3/8" = 1'-0"

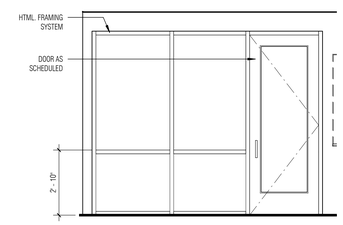

5 IE 2117 REPORT WRITING - D
SCALE: 3/8" = 1'-0"

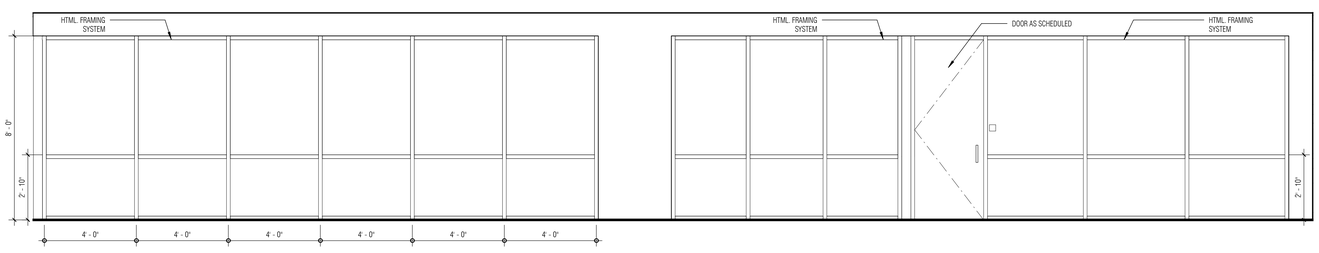

6 IE 2134 CORRIDOR - A
SCALE: 3/8" = 1'-0"

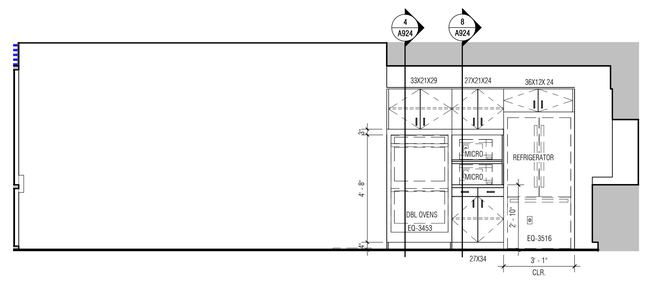

7 IE 2138 BREAKROOM / VENDING - A
SCALE: 3/8" = 1'-0"

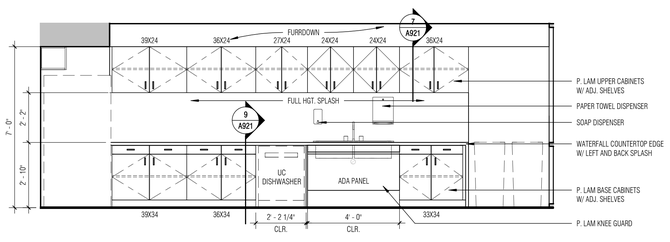

8 IE 2138 BREAKROOM / VENDING - B
SCALE: 3/8" = 1'-0"

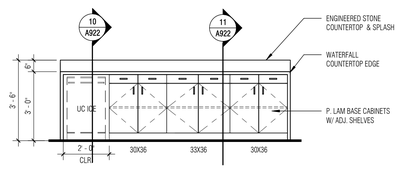

9 IE 2138 BREAKROOM / VENDING - ISLAND BACK
SCALE: 3/8" = 1'-0"

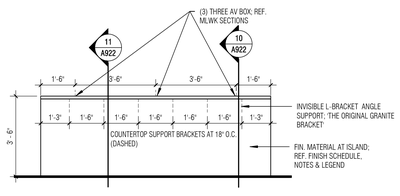

10 IE 2138 BREAKROOM / VENDING ISLAND FRONT
SCALE: 3/8" = 1'-0"

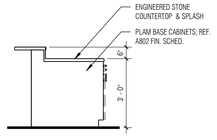

11 IE 2138 BREAKROOM / VENDING - ISLAND END
SCALE: 3/8" = 1'-0"

GLAZING SCHEDULE (INTERIOR)

NO.	TYPE
A	1/4" CLEAR TEMPERED
AF	FROSTED
B	3/8" CLEAR TEMPERED
L	1/2" CLEAR TEMPERED
M	IMPACT RESISTANT GLAZING
H3	BULLET RESISTANT GLAZING, LEVEL 3
H7	BULLET RESISTANT GLAZING, LEVEL 7
HM	STEEL SECURITY MESH
STL	1/4" STEEL PLATE
W	INTERIOR INSULATED GLAZING
WF	INTERIOR INSULATED GLAZING, FROSTED (#3)
WM	INTERIOR INSULATED GLAZING, COLOR LAMINATED FOR IMPACT RESISTANCE AND OPACITY

SHEET NOTES:
1. ALL INTERIOR GLAZING TYPE 'A' UNLESS NOTED OTHERWISE.
2. REF. TO DETAIL 5/A703 FOR ALL INTERIOR GLAZING UNLESS NOTED OTHERWISE.

Architect: Brinkley Sargent Wigginton Architects (972) 960-9970
Landscape: Kendall Landscape Architecture (214) 739-3226
Structural: L.A. Fuess Partners, Inc (214) 593-1118
MEP: M-E Engineers (214) 741-1589
Civil: KSA Engineers, Inc (903) 236-7700
Technology: M-E Engineers (303) 421-6656

BRINKLEY SARGENT WIGINTON ARCHITECTS

LONGVIEW POLICE DEPARTMENT

518 W. SOUTH ST. LONGVIEW, TEXAS 75601

HISTORY

#	DATE	DESCRIPTION

INT. ELEVATIONS

BID ISSUE

21719
08/19/2020

A908

8/19/2020 4:35:27 PM

G:\Work Locals\LPD_CENTRAL_A19_bcochener_CR-19-2020.rvt

© 2020 Brinkley Sargent Wigginton Architects, Inc.

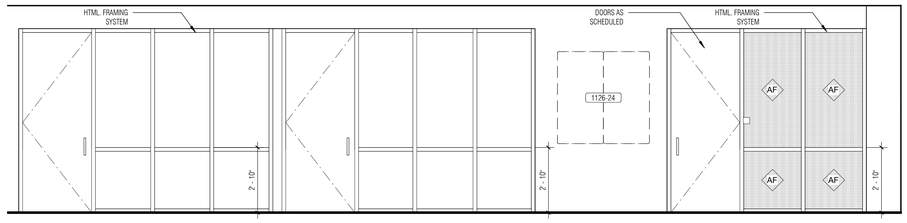

1 IE 2133 CORRIDOR - A
SCALE: 3/8" = 1'-0"

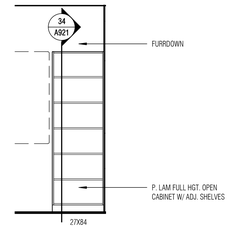

2 IE 2133 CORR. CAB - C
SCALE: 3/8" = 1'-0"

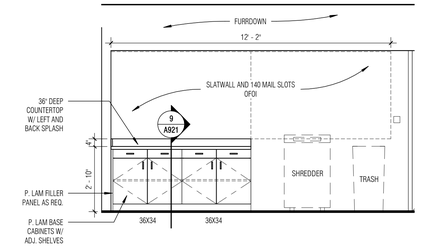

3 IE 2133 CORRIDOR COUNTER - C
SCALE: 3/8" = 1'-0"

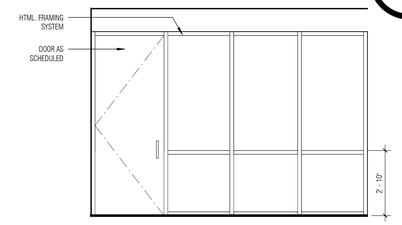

4 IE 2133 CORRIDOR - C
SCALE: 3/8" = 1'-0"

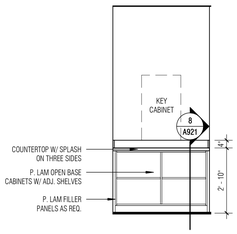

5 IE 2143 EQUIP. DIST. / STOR. - B
SCALE: 3/8" = 1'-0"

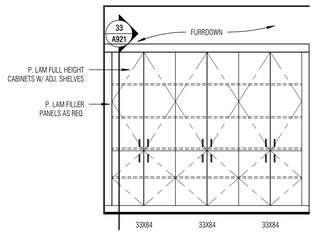

6 IE 2201 SOUND VEST. - A
SCALE: 3/8" = 1'-0"

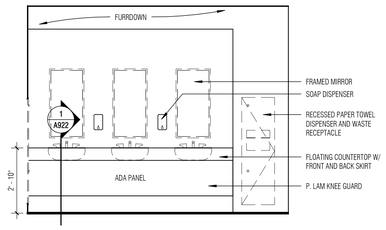

7 IE 2207 MEN'S - D
SCALE: 3/8" = 1'-0"

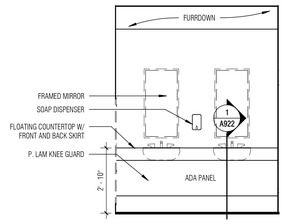

8 IE 2208 VESTIBULE - D
SCALE: 3/8" = 1'-0"

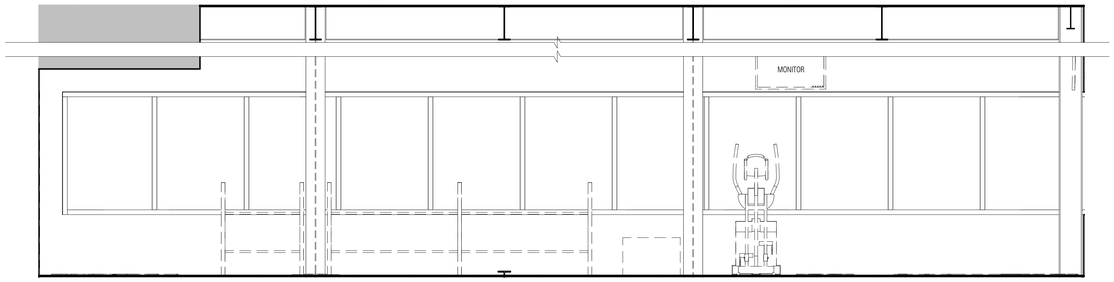

9 IE 2215 EXERCISE - A
SCALE: 3/8" = 1'-0"

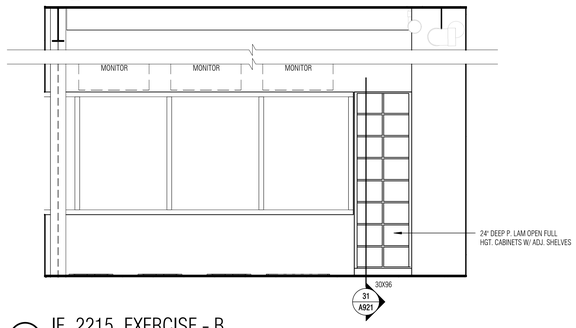

10 IE 2215 EXERCISE - B
SCALE: 3/8" = 1'-0"

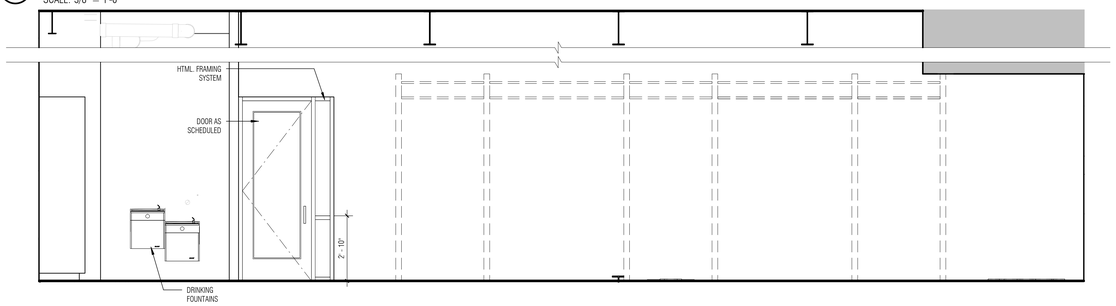

11 IE 2215 EXERCISE - C
SCALE: 3/8" = 1'-0"

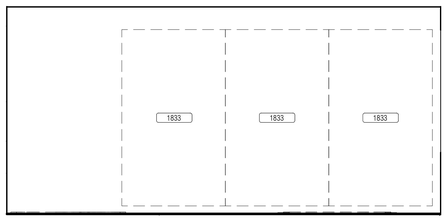

12 IE 2215 EXERCISE - D
SCALE: 3/8" = 1'-0"

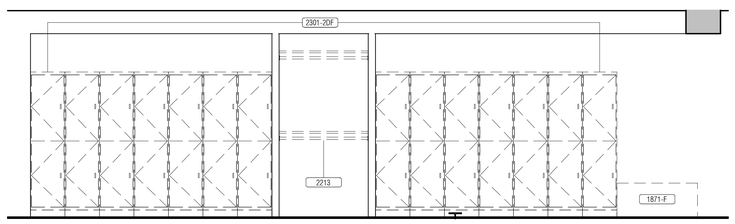

13 IE 2213 LOCKER ROOM - A
SCALE: 3/8" = 1'-0"

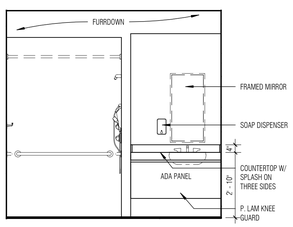

14 IE 2211 ACCESSIBLE SHOWER - B
SCALE: 3/8" = 1'-0"

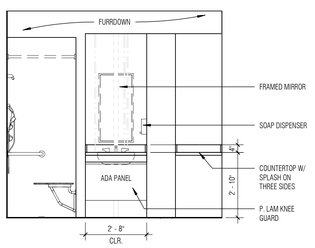

15 IE 2226 SHOWER - A
SCALE: 3/8" = 1'-0"

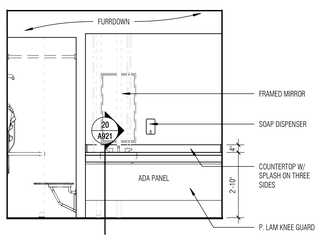

16 IE 2227 SHOWER - A
SCALE: 3/8" = 1'-0"

GLAZING SCHEDULE (INTERIOR)

NO.	TYPE
A	1/4" CLEAR TEMPERED
AF	FROSTED
B	3/8" CLEAR TEMPERED
L	1/2" CLEAR TEMPERED
M	IMPACT RESISTANT GLAZING
H3	BULLET RESISTANT GLAZING, LEVEL 3
H7	BULLET RESISTANT GLAZING, LEVEL 7
HM	STEEL SECURITY MESH
STL	1/4" STEEL PLATE
W	INTERIOR INSULATED GLAZING
WF	INTERIOR INSULATED GLAZING, FROSTED (#3)
WM	INTERIOR INSULATED GLAZING, COLOR LAMINATED FOR IMPACT RESISTANCE AND OPACITY

SHEET NOTES:
1. ALL INTERIOR GLAZING TYPE 'A' UNLESS NOTED OTHERWISE.
2. REF. TO DETAIL 5/A703 FOR ALL INTERIOR GLAZING UNLESS NOTED OTHERWISE.

BRINKLEY SARGENT WIGINTON ARCHITECTS

Architect: Brinkley Sargent Wigginton Architects (972) 960-9970
Landscape: Kendall Landscape Architecture (214) 739-3226
Structural: L.A. Fuess Partners, Inc (214) 593-1118
MEP: M-E Engineers (214) 741-1589
Civil: KSA Engineers, Inc (903) 236-7700
Technology: M-E Engineers (303) 421-6636

LONGVIEW POLICE DEPARTMENT

518 W. SOUTH ST. LONGVIEW, TEXAS 75601

HISTORY

#	DATE	DESCRIPTION

REGISTERED ARCHITECT RONALD L. SARGENT 9941 STATE OF TEXAS
08/19/2020

INT. ELEVATIONS

BID ISSUE

21719
08/19/2020
A909

8/18/2020 4:36:08 PM

D:\Revit Local\Rfp_CENTRAL_A19_boomer_08-18-2020.rvt

© 2020 Brinkley Sargent Wigginton Architects, Inc.

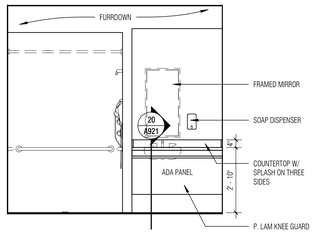

1 IE 2229 ACCESSIBLE SHOWER - A
SCALE: 3/8" = 1'-0"

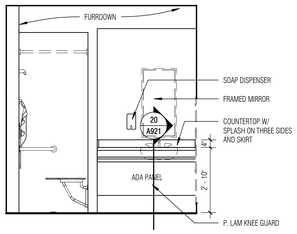

2 IE 2224 TOILET / SHOWER - C
SCALE: 3/8" = 1'-0"

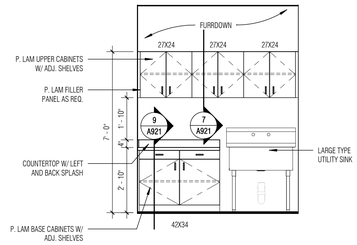

3 IE 2225 UTILITY ROOM - A
SCALE: 3/8" = 1'-0"

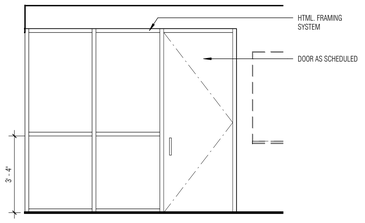

4 IE 2135 TRAFFIC UNIT - D
SCALE: 3/8" = 1'-0"

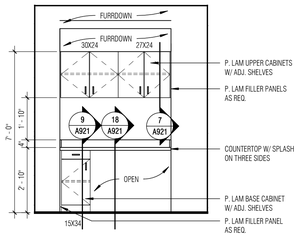

5 IE 2137 STORAGE - D
SCALE: 3/8" = 1'-0"

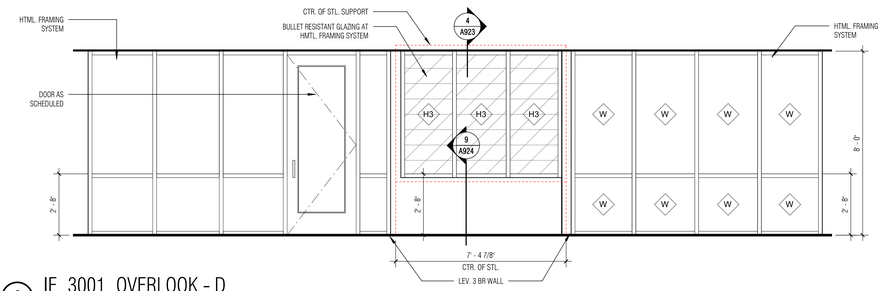

6 IE 3001 OVERLOOK - D
SCALE: 3/8" = 1'-0"

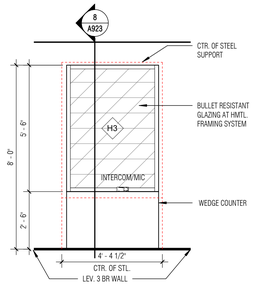

7 IE 3002 RECEPTION / WAITING - A
SCALE: 3/8" = 1'-0"

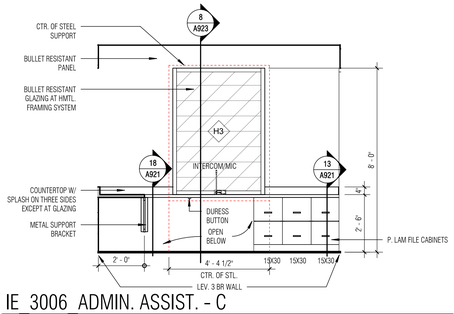

8 IE 3006 ADMIN. ASSIST. - C
SCALE: 3/8" = 1'-0"

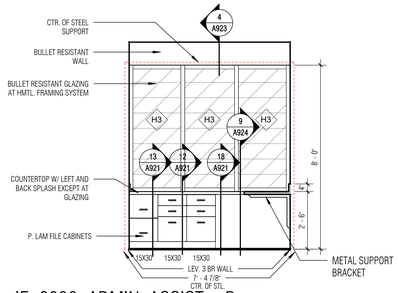

9 IE 3006 ADMIN. ASSIST. - B
SCALE: 3/8" = 1'-0"

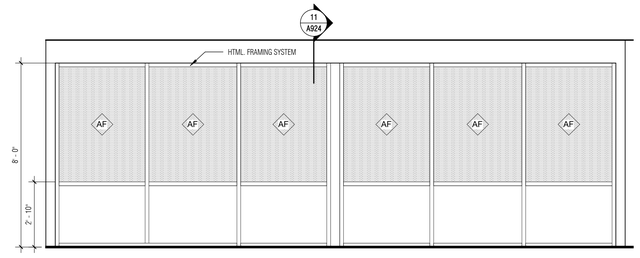

10 IE 3007 CORRIDOR - C
SCALE: 3/8" = 1'-0"

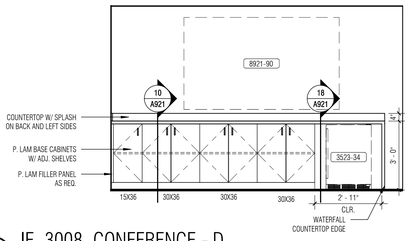

11 IE 3008 CONFERENCE - D
SCALE: 3/8" = 1'-0"

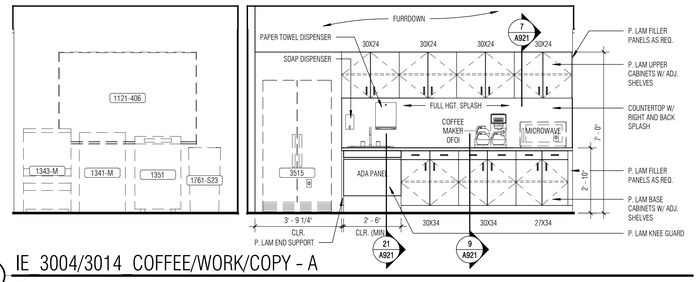

12 IE 3004/3014 COFFEE/WORK/COPY - A
SCALE: 3/8" = 1'-0"

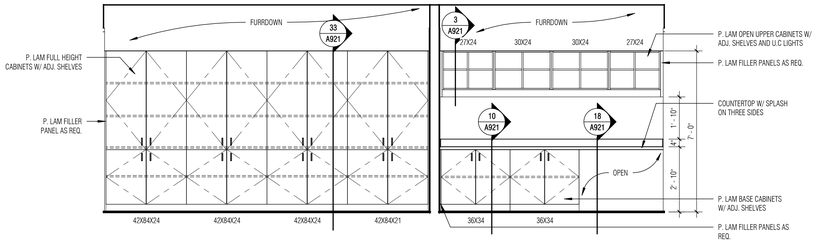

13 IE 3004/3014 COFFEE/WORK/COPY - C
SCALE: 3/8" = 1'-0"

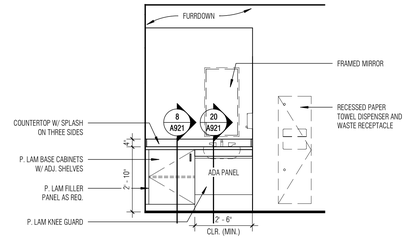

14 IE 3015 WOMENS - C
SCALE: 3/8" = 1'-0"

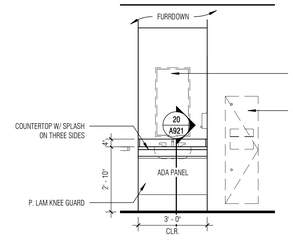

15 IE 3017 MENS - A
SCALE: 3/8" = 1'-0"

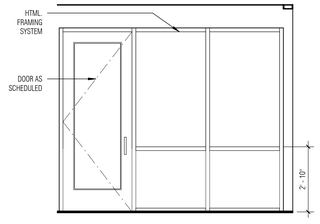

16 IE 3011 CORRIDOR - B
SCALE: 3/8" = 1'-0"

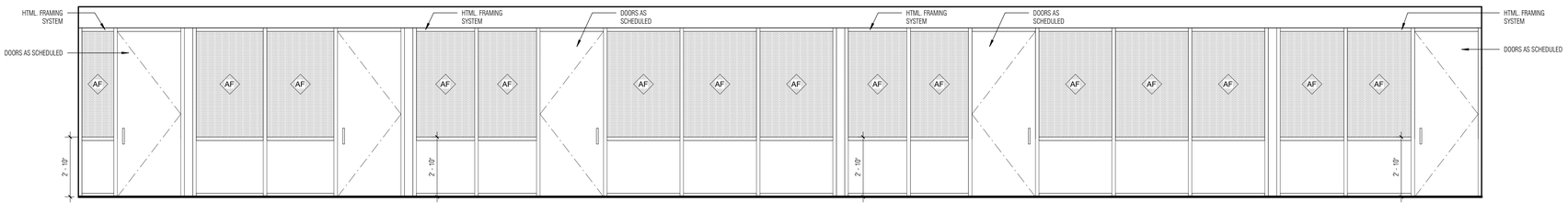

17 IE 3022 CORRIDOR - C
SCALE: 3/8" = 1'-0"

GLAZING SCHEDULE (INTERIOR)

NO.	TYPE
A	1/4" CLEAR TEMPERED
AF	FROSTED
B	3/8" CLEAR TEMPERED
L	1/2" CLEAR TEMPERED
M	IMPACT RESISTANT GLAZING
H3	BULLET RESISTANT GLAZING, LEVEL 3
H7	BULLET RESISTANT GLAZING, LEVEL 7
HM	STEEL SECURITY MESH
STL	1/4" STEEL PLATE
W	INTERIOR INSULATED GLAZING
WF	INTERIOR INSULATED GLAZING, FROSTED (#3)
WM	INTERIOR INSULATED GLAZING, COLOR LAMINATED FOR IMPACT RESISTANCE AND OPACITY

SHEET NOTES:
1. ALL INTERIOR GLAZING TYPE 'A' UNLESS NOTED OTHERWISE.
2. REF. TO DETAIL 5/A703 FOR ALL INTERIOR GLAZING UNLESS NOTED OTHERWISE.

Architect: Brinkley Sargent Wigginton Architects (972) 960-9970
Landscape: Kendall Landscape Architecture (214) 739-3226
Structural: L.A. Fuess Partners, Inc (214) 593-1118
MEP: M-E Engineers (214) 741-1589
Civil: KSA Engineers, Inc (903) 236-7700
Technology: M-E Engineers (303) 421-6636

BRINKLEY SARGENT WIGGINTON ARCHITECTS

LONGVIEW POLICE DEPARTMENT

518 W. SOUTH ST. LONGVIEW, TEXAS 75601

HISTORY

#	DATE	DESCRIPTION

08/19/2020

INT. ELEVATIONS

BID ISSUE

21719
08/19/2020

A910

D:\Revit Locals\LPD_CENTRAL_A19_Sacramento_08-19-2020.rvt

8/19/2020 4:36:41 PM

© 2020 Brinkley Sargent Wigginton Architects, Inc.

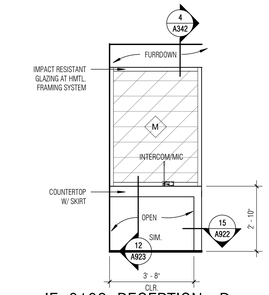

1 IE 3102 RECEPTION - D
SCALE: 3/8" = 1'-0"

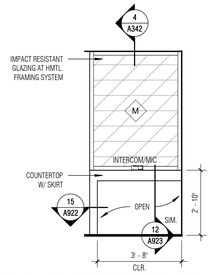

2 IE 3103 SUSPECT WAITING - B
SCALE: 3/8" = 1'-0"

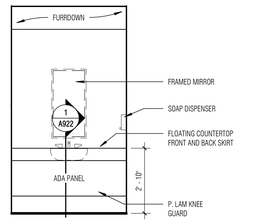

3 IE 3108 WOMEN'S - B
SCALE: 3/8" = 1'-0"

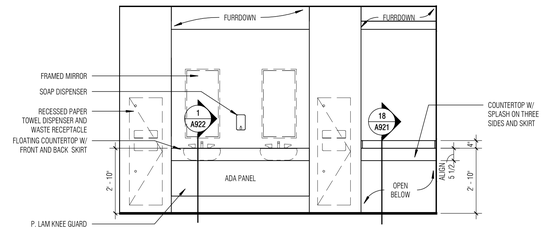

4 IE 3109 MEN'S - B
SCALE: 3/8" = 1'-0"

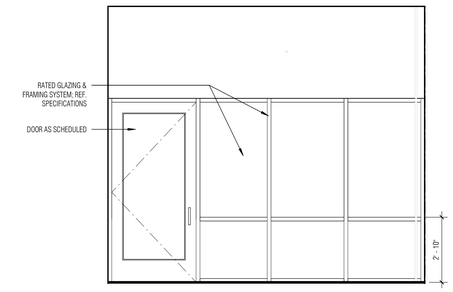

5 IE ST-02 LVL 3 STAFF STAIR LANDING - A
SCALE: 3/8" = 1'-0"

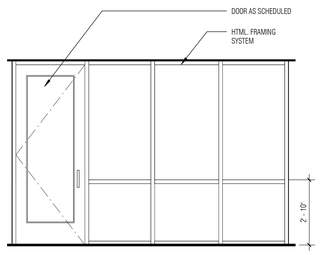

6 IE 3001 OVERLOOK - B
SCALE: 3/8" = 1'-0"

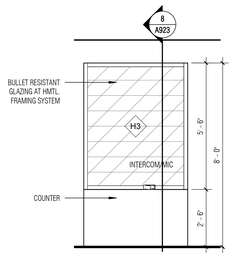

7 IE 3207 PUBLIC WAITING - B
SCALE: 3/8" = 1'-0"

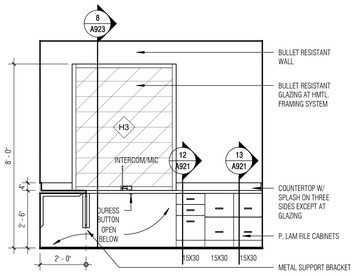

8 IE 3205 ADMIN. ASSIST. - D
SCALE: 3/8" = 1'-0"

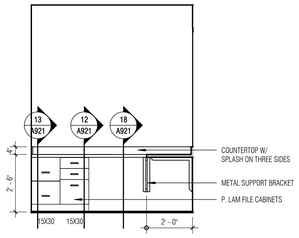

9 IE 3205 ADMIN. ASSIST. - C
SCALE: 3/8" = 1'-0"

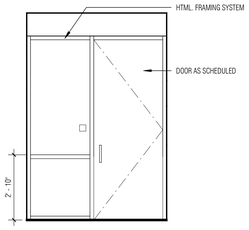

10 IE 3201 CORRIDOR - D
SCALE: 3/8" = 1'-0"

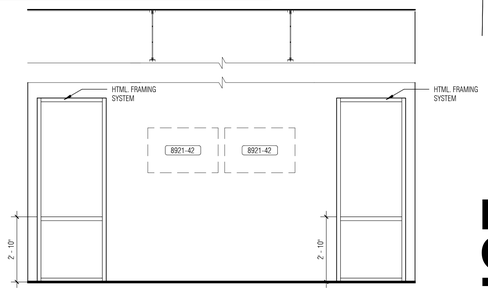

11 IE 3151 CORRIDOR - A
SCALE: 3/8" = 1'-0"

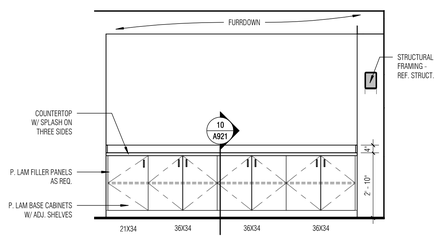

12 IE 3149 STRATEGY CONF. - D
SCALE: 3/8" = 1'-0"

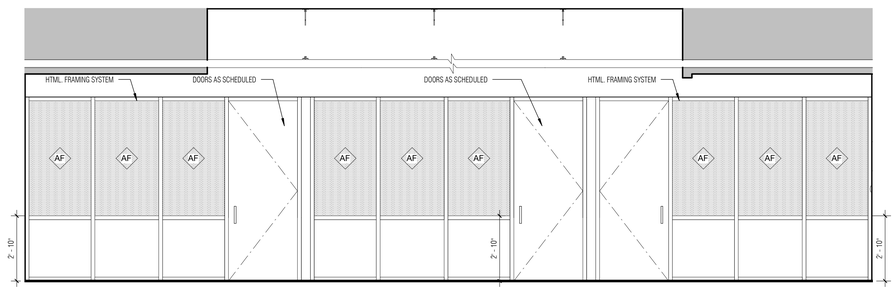

13 IE 3138 TASK FORCE OFFICERS - A
SCALE: 3/8" = 1'-0"

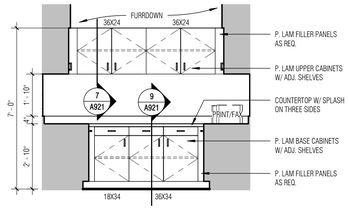

14 IE 3134 CYBER LAB RECEIVING - A
SCALE: 3/8" = 1'-0"

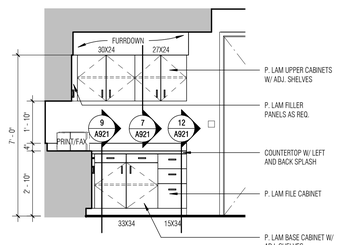

15 IE 3134 CYBER LAB RECEIVING - B
SCALE: 3/8" = 1'-0"

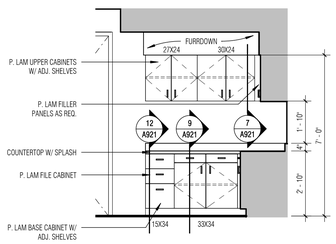

16 IE 3134 CYBER LAB RECEVING - D
SCALE: 3/8" = 1'-0"

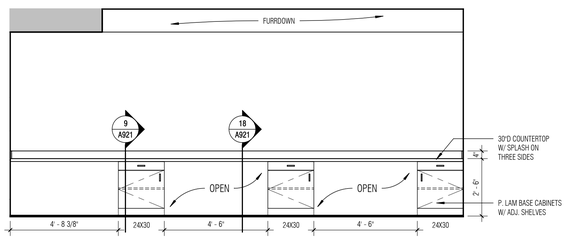

17 IE 3135 TECH INVESTIGATORS / CYBER LAB - B
SCALE: 3/8" = 1'-0"

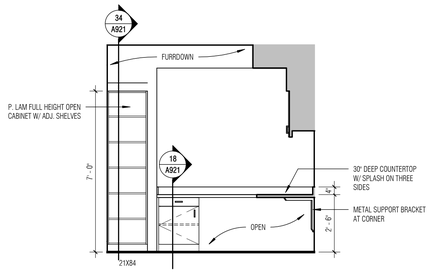

18 IE 3137 SOLDER WORKSTATION - B
SCALE: 3/8" = 1'-0"

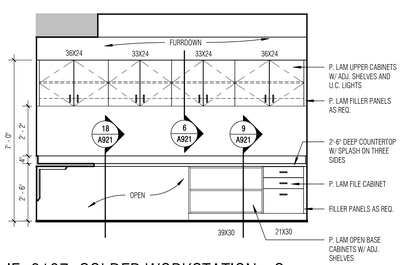

19 IE 3137 SOLDER WORKSTATION - C
SCALE: 3/8" = 1'-0"

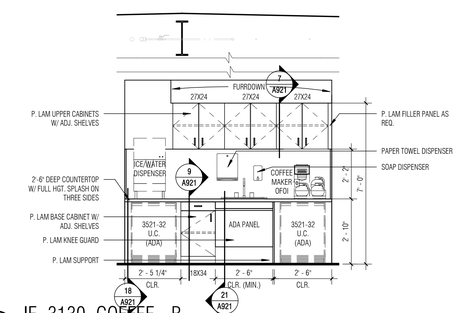

20 IE 3130 COFFEE - B
SCALE: 3/8" = 1'-0"

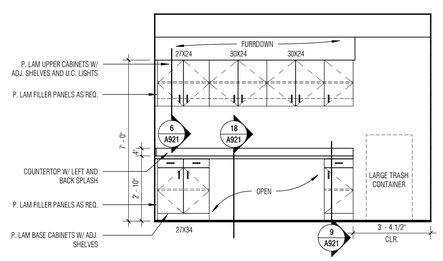

21 IE 3131 COPY/WORK/COFFEE - A
SCALE: 3/8" = 1'-0"

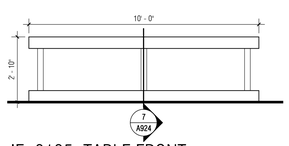

22 IE 3135 TABLE FRONT
SCALE: 3/8" = 1'-0"

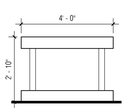

23 IE 3135 TABLE SIDE
SCALE: 3/8" = 1'-0"

GLAZING SCHEDULE (INTERIOR)

NO.	TYPE
A	1/4" CLEAR TEMPERED
AF	FROSTED
B	3/8" CLEAR TEMPERED
L	1/2" CLEAR TEMPERED
M	IMPACT RESISTANT GLAZING
H3	BULLET RESISTANT GLAZING, LEVEL 3
H7	BULLET RESISTANT GLAZING, LEVEL 7
HM	STEEL SECURITY MESH
STL	1/4" STEEL PLATE
W	INTERIOR INSULATED GLAZING
WF	INTERIOR INSULATED GLAZING, FROSTED (#3)
WM	INTERIOR INSULATED GLAZING, COLOR LAMINATED FOR IMPACT RESISTANCE AND OPACITY

SHEET NOTES:
1. ALL INTERIOR GLAZING TYPE 'A' UNLESS NOTED OTHERWISE.
2. REF. TO DETAIL 5/A703 FOR ALL INTERIOR GLAZING UNLESS NOTED OTHERWISE.

BRINKLEY SARGENT WIGGINTON ARCHITECTS

Architect: Brinkley Sargent Wigginton Architects (972) 960-9970
Landscape: Kendall Landscape Architecture (214) 739-3226
Structural: L.A. Fuess Partners, Inc (214) 593-1118
MEP: M-E Engineers (214) 741-1589
Civil: KSA Engineers, Inc (903) 236-7700
Technology: M-E Engineers (303) 421-6656

LONGVIEW POLICE DEPARTMENT

518 W. SOUTH ST. LONGVIEW, TEXAS 75601

HISTORY

#	DATE	DESCRIPTION

08/19/2020

INT. ELEVATIONS

BID ISSUE

21719
08/19/2020

A911

8/19/2020 4:37:18 PM

E:\Revit Locals\PD_CENTRAL_A19_Jacobsen_08-19-2020.rvt

© 2020 Brinkley Sargent Wigginton Architects, Inc.

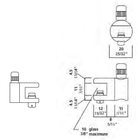

5 SINGLE GRIPPER
SCALE: NTS

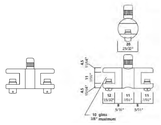

6 DOUBLE EDGE GRIPPER
SCALE: NTS

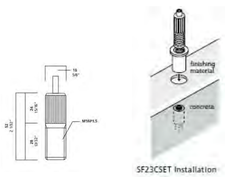

7 FLOOR TENSION
SCALE: NTS

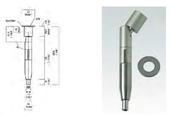

8 ANGLED CEILING GRIPPER
SCALE: NTS

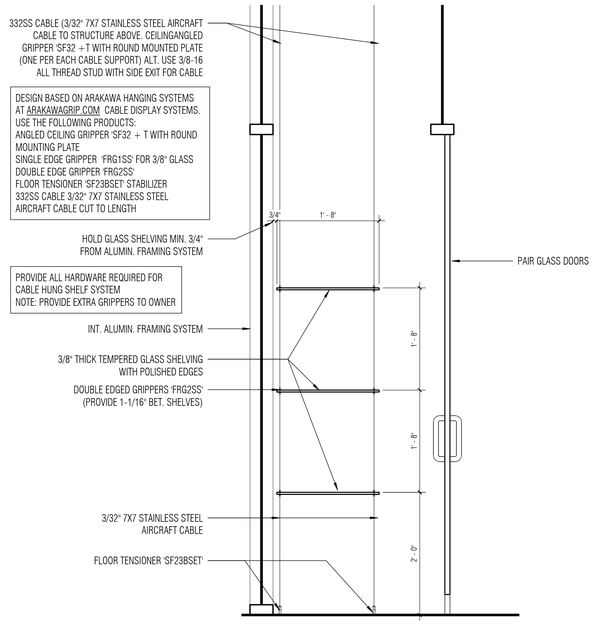

4 SD CABLE SUPPORTED GLASS SHELVING SYSTEM @ DISPLAY
SCALE: 1" = 1'-0"

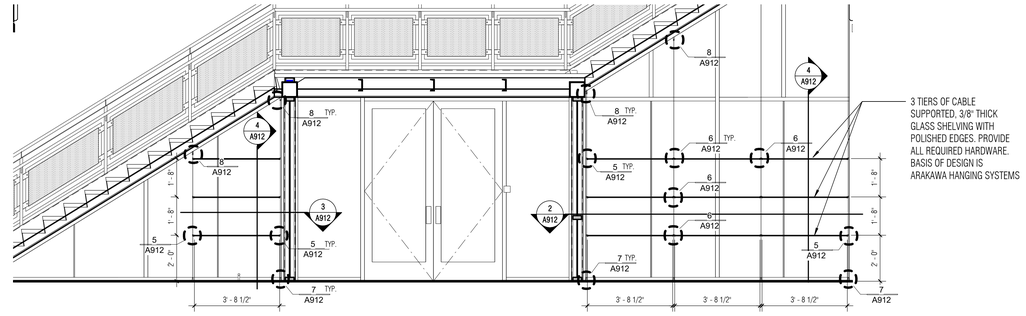

1 IE 1003 1004 CABLE SUPPORTED GLASS SHELVING AT DISPLAY
SCALE: 3/8" = 1'-0"

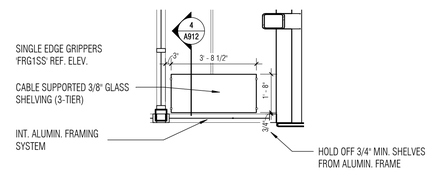

3 EP 1004 DISPLAY
SCALE: 3/8" = 1'-0"

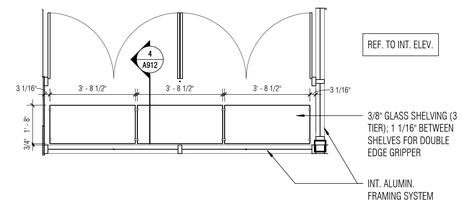

2 EP 1003 DISPLAY
SCALE: 3/8" = 1'-0"

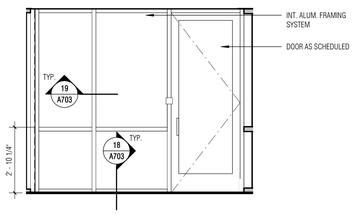

9 IE 1001 VESTIBULE - B/D
SCALE: NTS

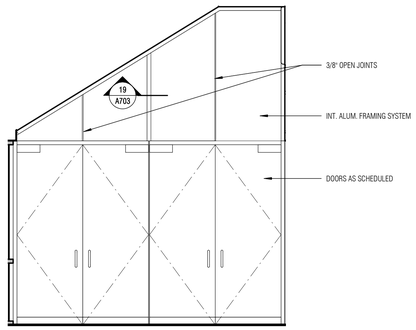

10 IE 1002 AFTER-HRS LOBBY COUNTER - C
SCALE: NTS

GLAZING SCHEDULE (INTERIOR)

NO.	TYPE
A	1/4" CLEAR TEMPERED
AF	FROSTED
B	3/8" CLEAR TEMPERED
L	1/2" CLEAR TEMPERED
M	IMPACT RESISTANT GLAZING
H3	BULLET RESISTANT GLAZING, LEVEL 3
H7	BULLET RESISTANT GLAZING, LEVEL 7
HM	STEEL SECURITY MESH
STL	1/4" STEEL PLATE
W	INTERIOR INSULATED GLAZING
WF	INTERIOR INSULATED GLAZING, FROSTED (#3)
WM	INTERIOR INSULATED GLAZING, COLOR LAMINATED FOR IMPACT RESISTANCE AND OPACITY

SHEET NOTES:
1. ALL INTERIOR GLAZING TYPE 'A' UNLESS NOTED OTHERWISE.
2. REF. TO DETAIL 5/A703 FOR ALL INTERIOR GLAZING UNLESS NOTED OTHERWISE.

Architect: Brinkley Sargent Wigginton Architects (972) 960-9970
Landscape: Kendall Landscape Architecture (214) 739-3226
Structural: L.A. Fuess Partners, Inc (214) 593-1118
MEP: M-E Engineers (214) 741-1589
Civil: KSA Engineers, Inc (903) 236-7700
Technology: M-E Engineers (303) 421-6656

BRINKLEY SARGENT WIGGINTON ARCHITECTS

LONGVIEW POLICE DEPARTMENT

518 W. SOUTH ST. LONGVIEW, TEXAS 75601

HISTORY

#	DATE	DESCRIPTION

INT. ELEVATIONS

21719
08/19/2020

A912

BID ISSUE

8/18/2020 4:37:52 PM

D:\Revit Local\LPD_CENTRAL_A19_Boschmeier_08-18-2020.rvt

© 2020 Brinkley Sargent Wiginton Architects, Inc.

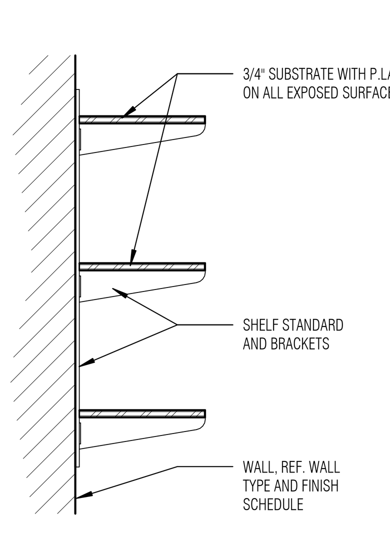

1 MLWK PLAM SHLVS-ON-STNDS
SCALE: 1" = 1'-0"

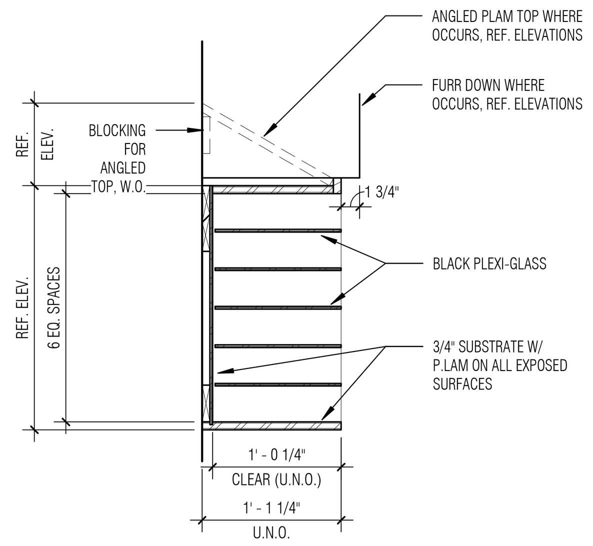

2 MLWK PLAM MAILSLOTS
SCALE: 1" = 1'-0"

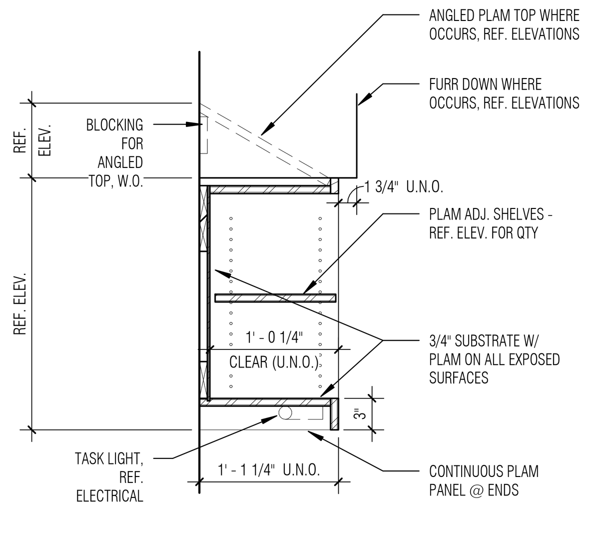

3 MLWK PLAM UPPER (F-UC)
SCALE: 1" = 1'-0"

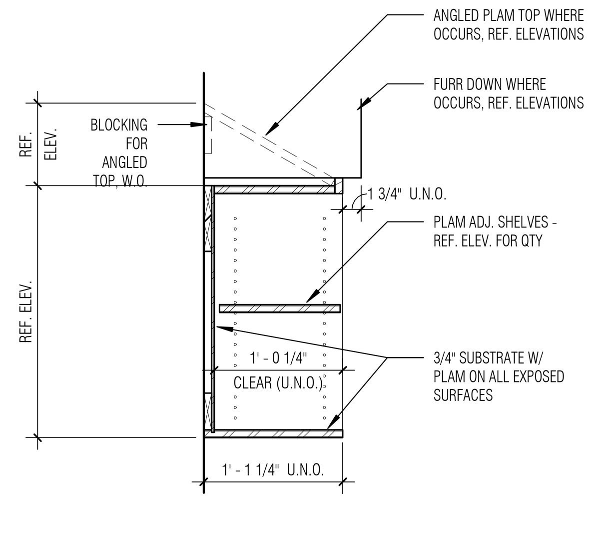

4 MLWK PLAM UPPER (F)
SCALE: 1" = 1'-0"

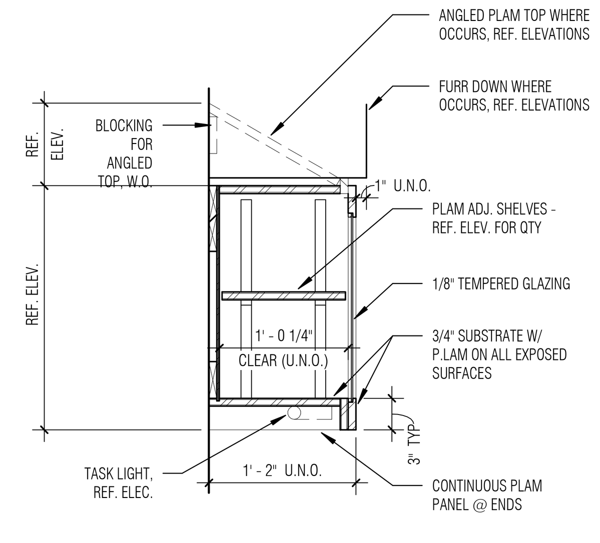

5 MLWK PLAM UPPER (D-UC-G)
SCALE: 1" = 1'-0"

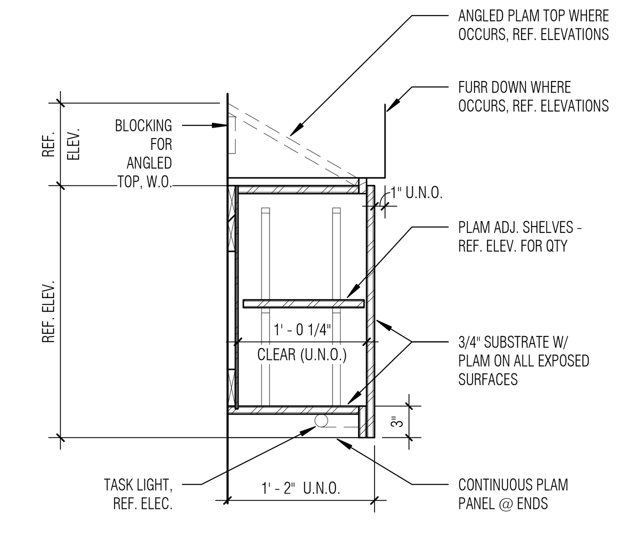

6 MLWK PLAM UPPER (D-UC)
SCALE: 1" = 1'-0"

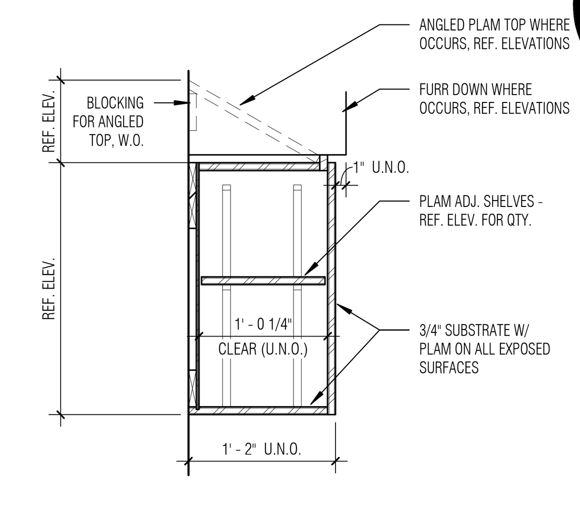

7 MLWK PLAM UPPER (D)
SCALE: 1" = 1'-0"

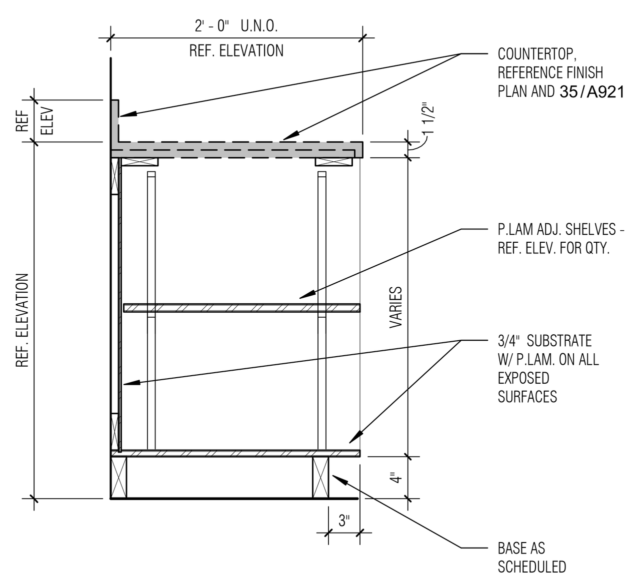

8 MLWK PLAM BASE (F)
SCALE: 1" = 1'-0"

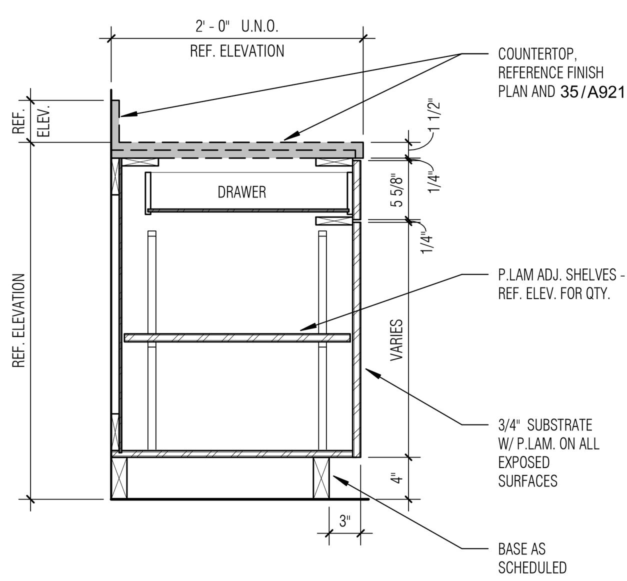

9 MLWK PLAM BASE (E)
SCALE: 1" = 1'-0"

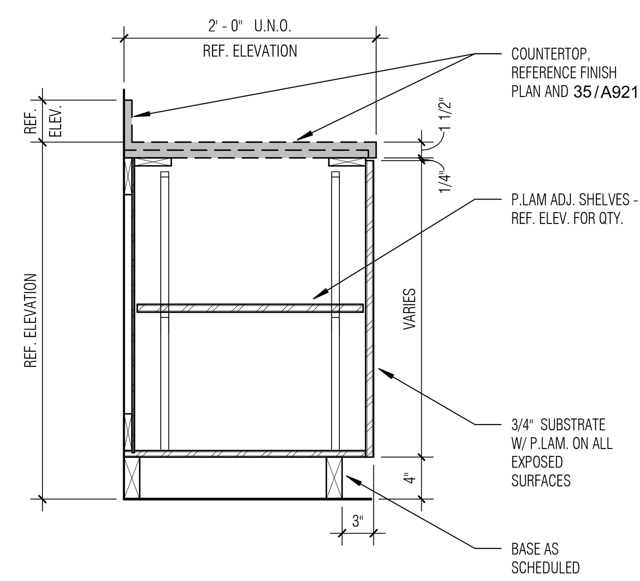

10 MLWK PLAM BASE (D)
SCALE: 1" = 1'-0"

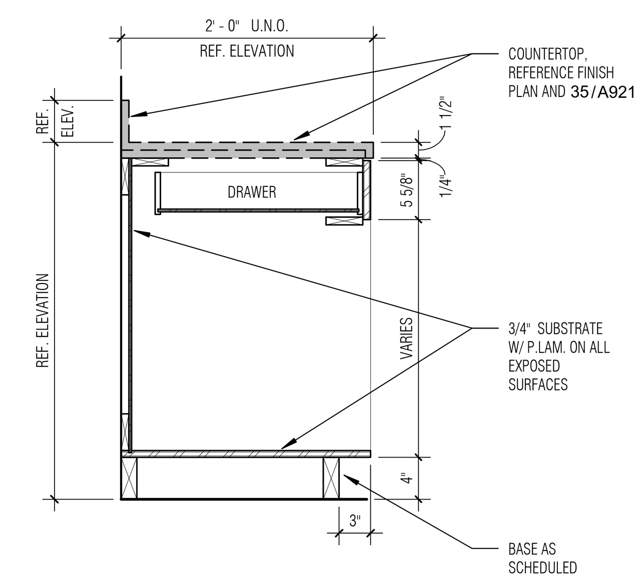

11 MLWK PLAM BASE (CF)
SCALE: 1" = 1'-0"

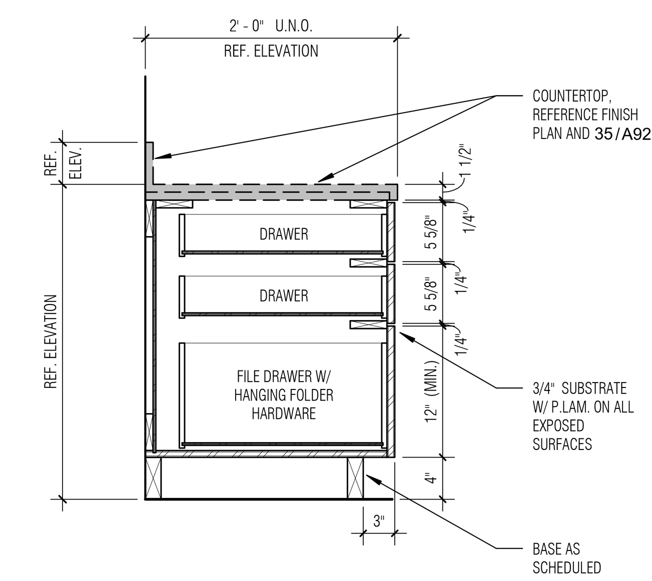

12 MLWK PLAM BBF (C)
SCALE: 1" = 1'-0"

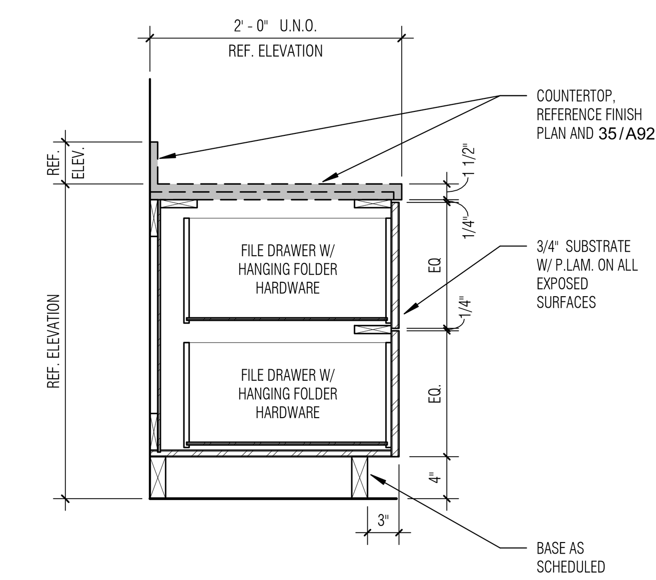

13 MLWK PLAM FF (B)
SCALE: 1" = 1'-0"

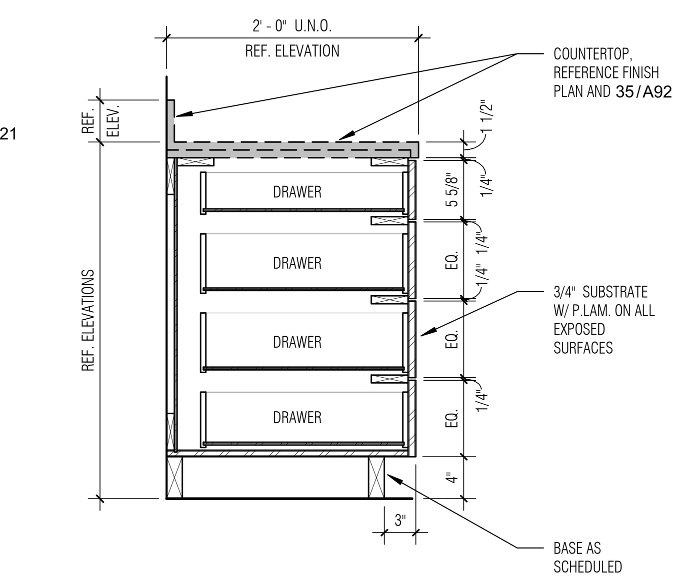

14 MLWK PLAM BASE (A)
SCALE: 1" = 1'-0"

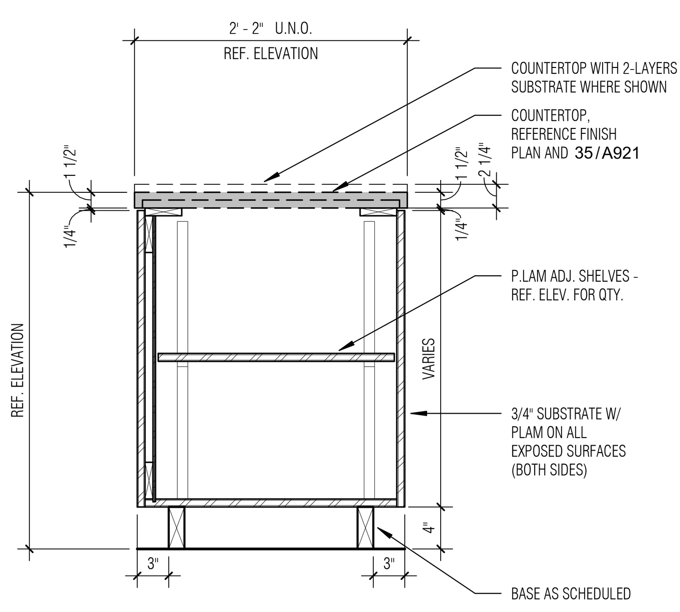

15 MLWK PLAM FREESTANDING
SCALE: 1" = 1'-0"

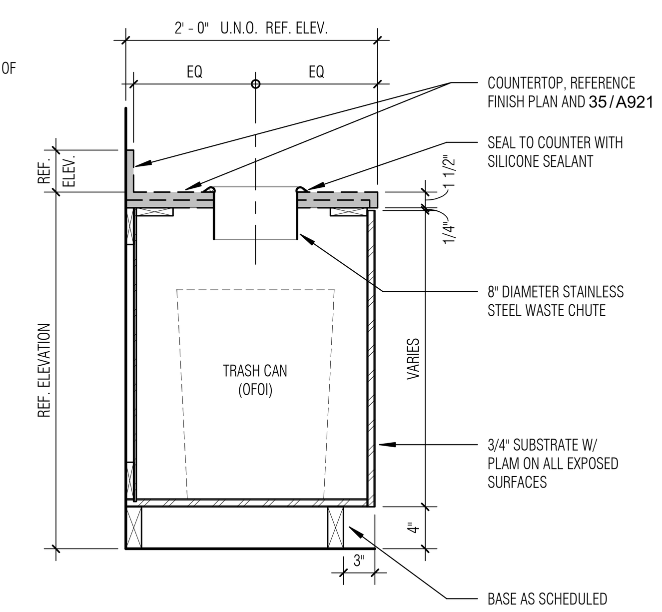

16 MLWK PLAM BASE TRASH
SCALE: 1" = 1'-0"

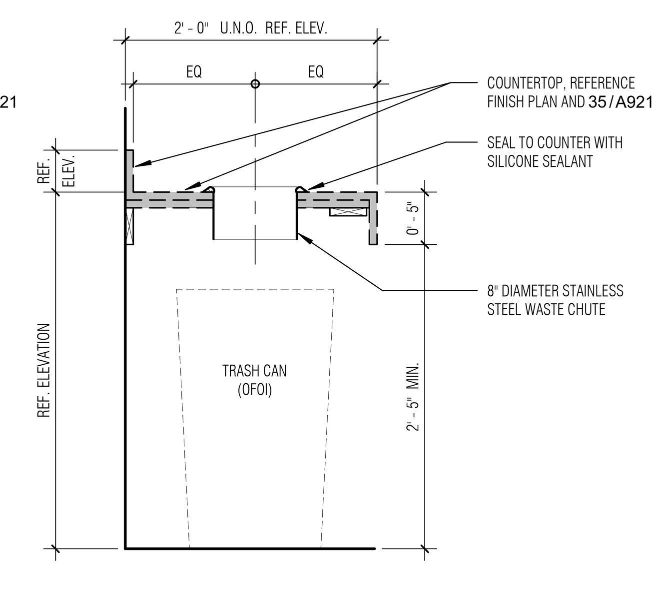

17 MLWK COUNTER W/ HOLE
SCALE: 1" = 1'-0"

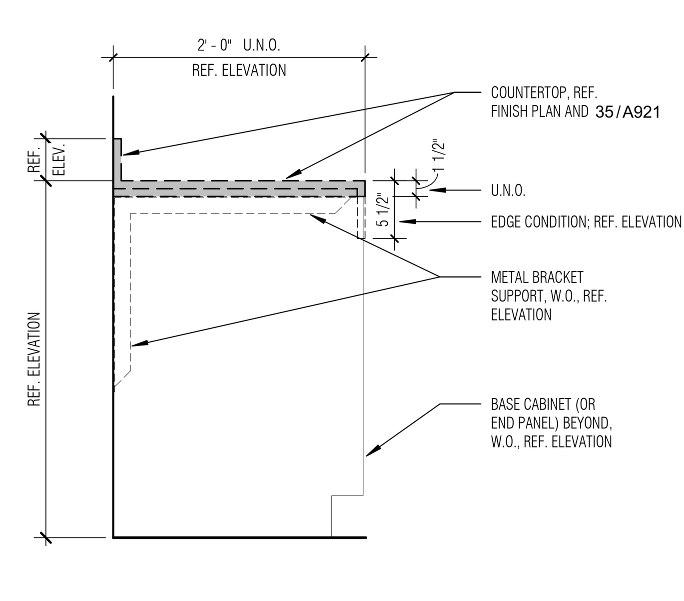

18 MLWK COUNTER
SCALE: 1" = 1'-0"

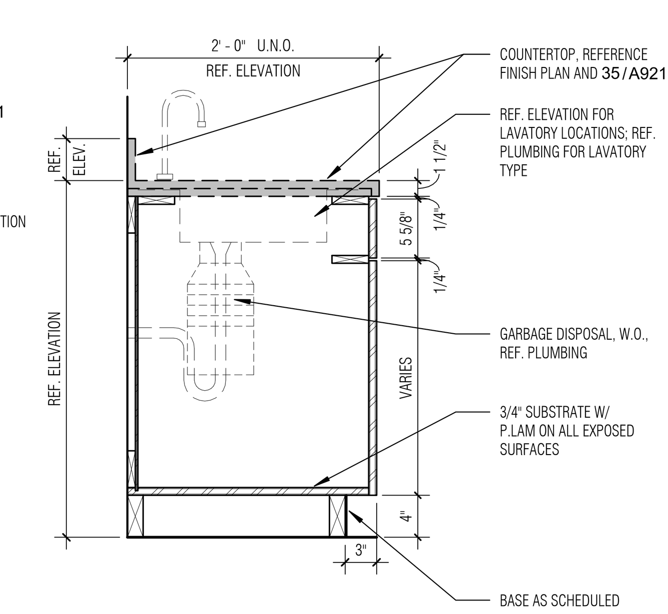

19 MLWK PLAM SINK CAB
SCALE: 1" = 1'-0"

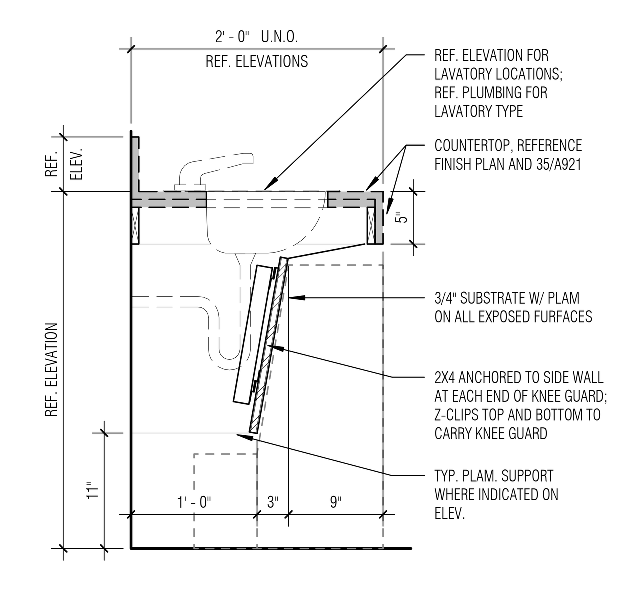

20 MLWK PLAM LAV ADA
SCALE: 1" = 1'-0"

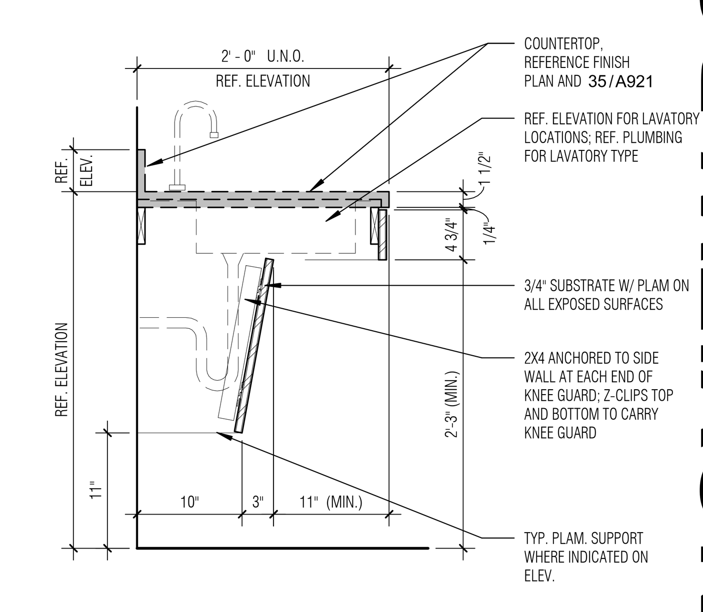

21 MLWK PLAM SINK ADA
SCALE: 1" = 1'-0"

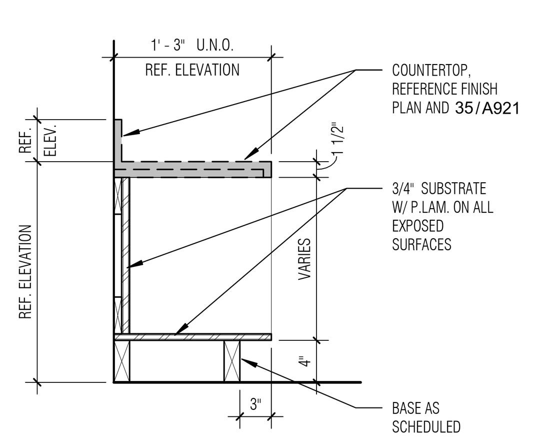

22 MLWK PLAM CUBBIE (LOW)
SCALE: 1" = 1'-0"

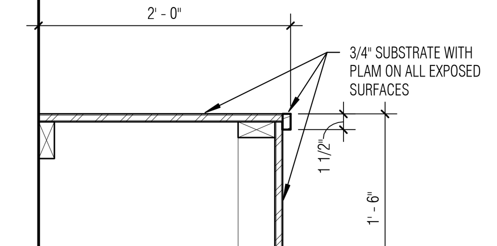

29 MLWK PLAM ADA BENCH
SCALE: 1" = 1'-0"

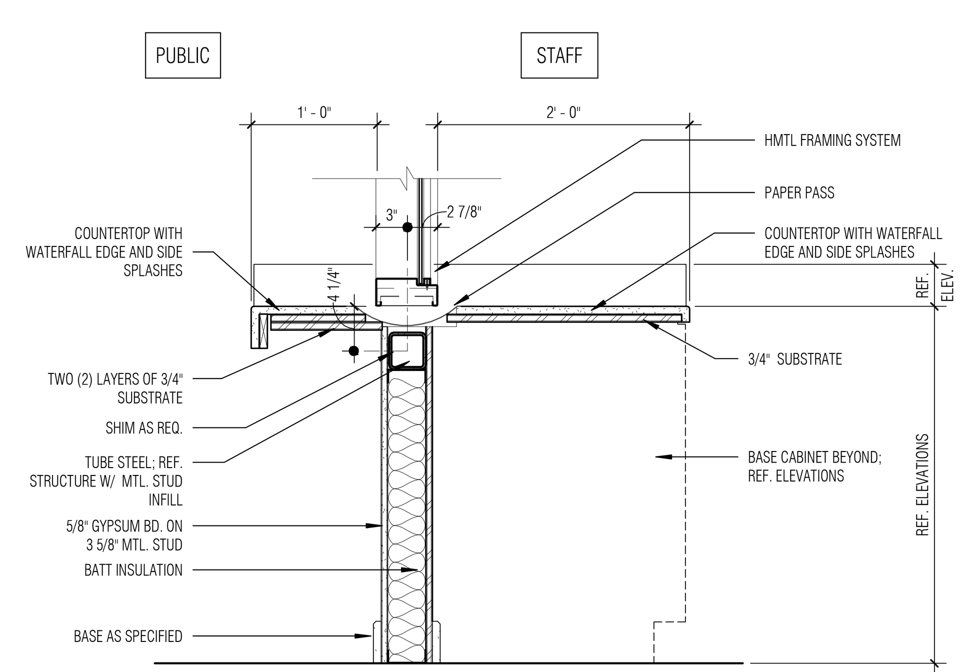

30 MLWK COUNTER W/ PAPER PASS (NO BR)
SCALE: 1" = 1'-0"

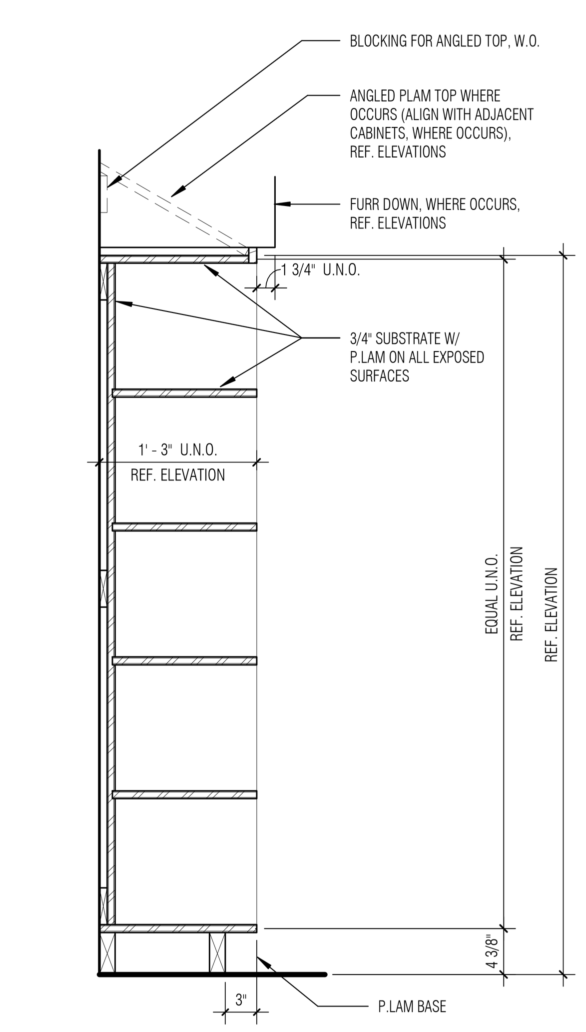

31 MLWK PLAM CUBBIE (FULL)
SCALE: 1" = 1'-0"

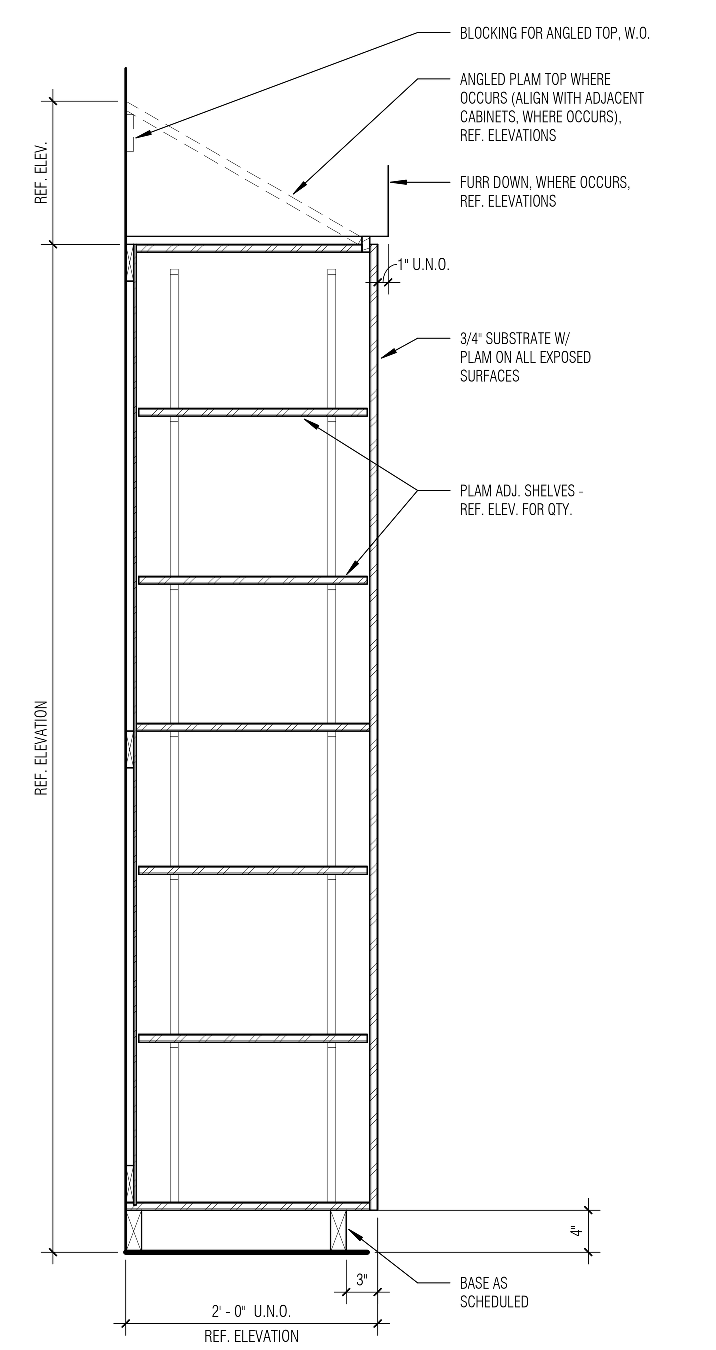

32 MLWK PLAM FULL CAB (1 DOOR)
SCALE: 1" = 1'-0"

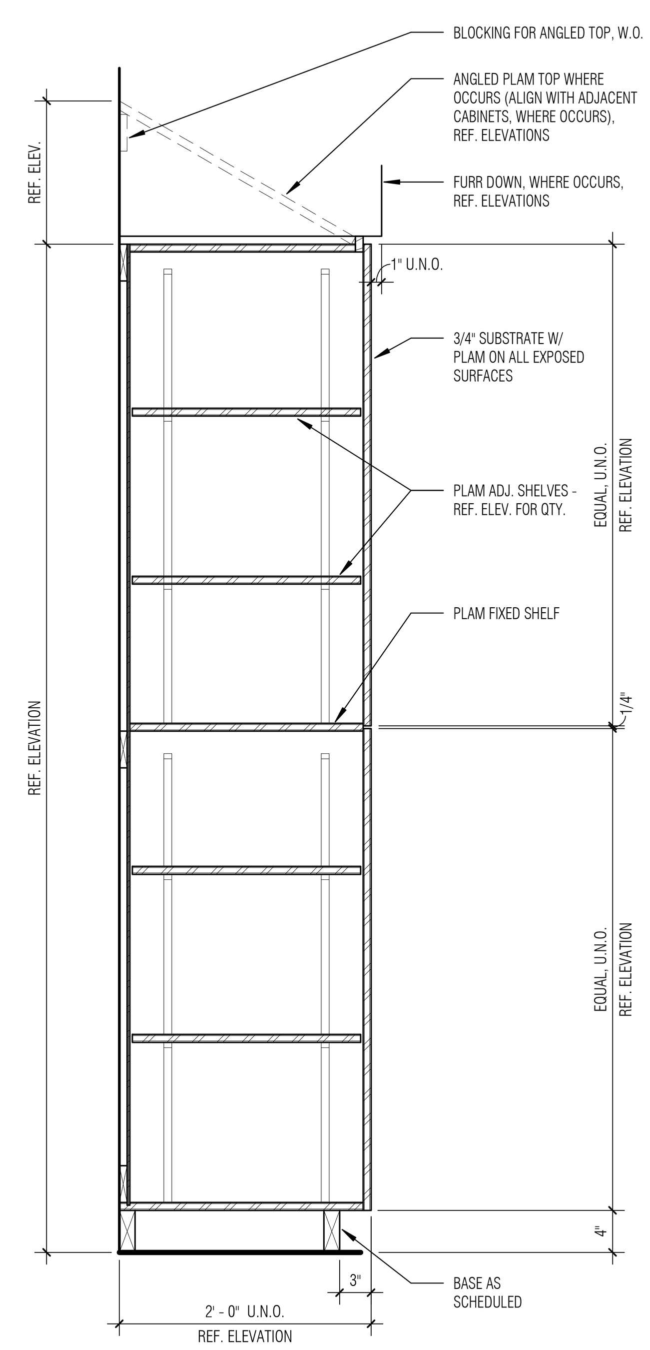

33 MLWK PLAM FULL CAB (2 DOOR)
SCALE: 1" = 1'-0"

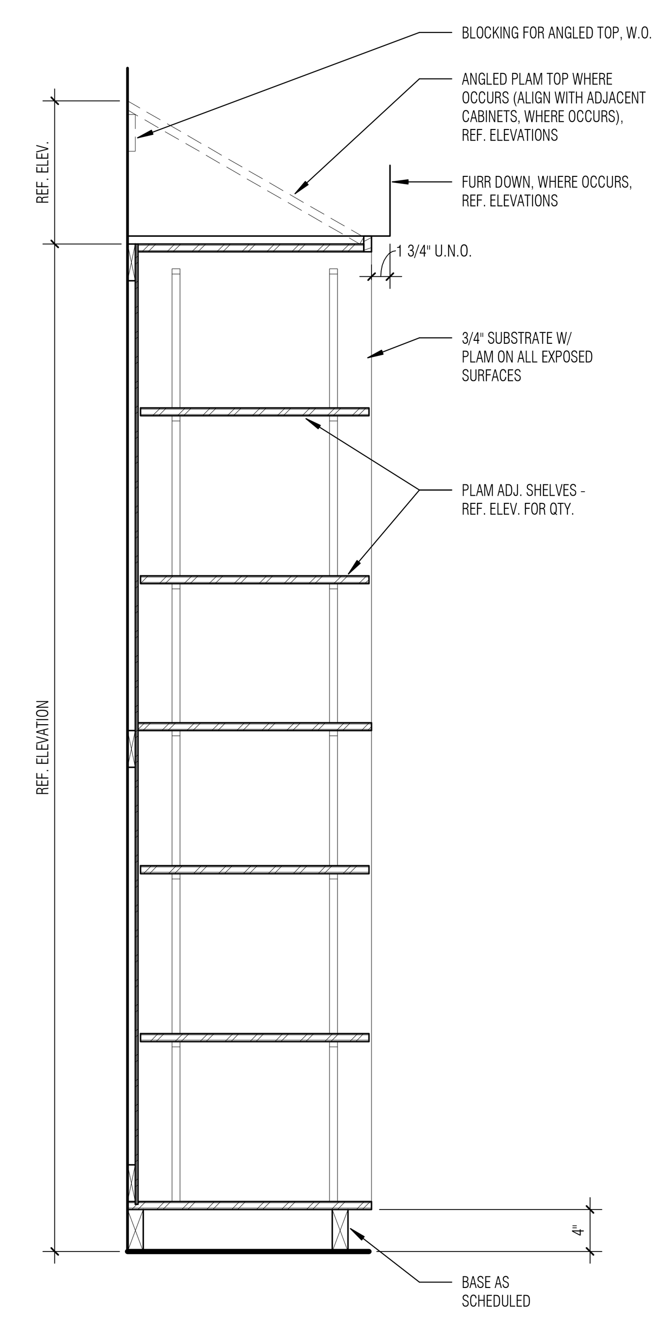

34 MLWK PLAM ADJ SHELVES (FULL)
SCALE: 1" = 1'-0"

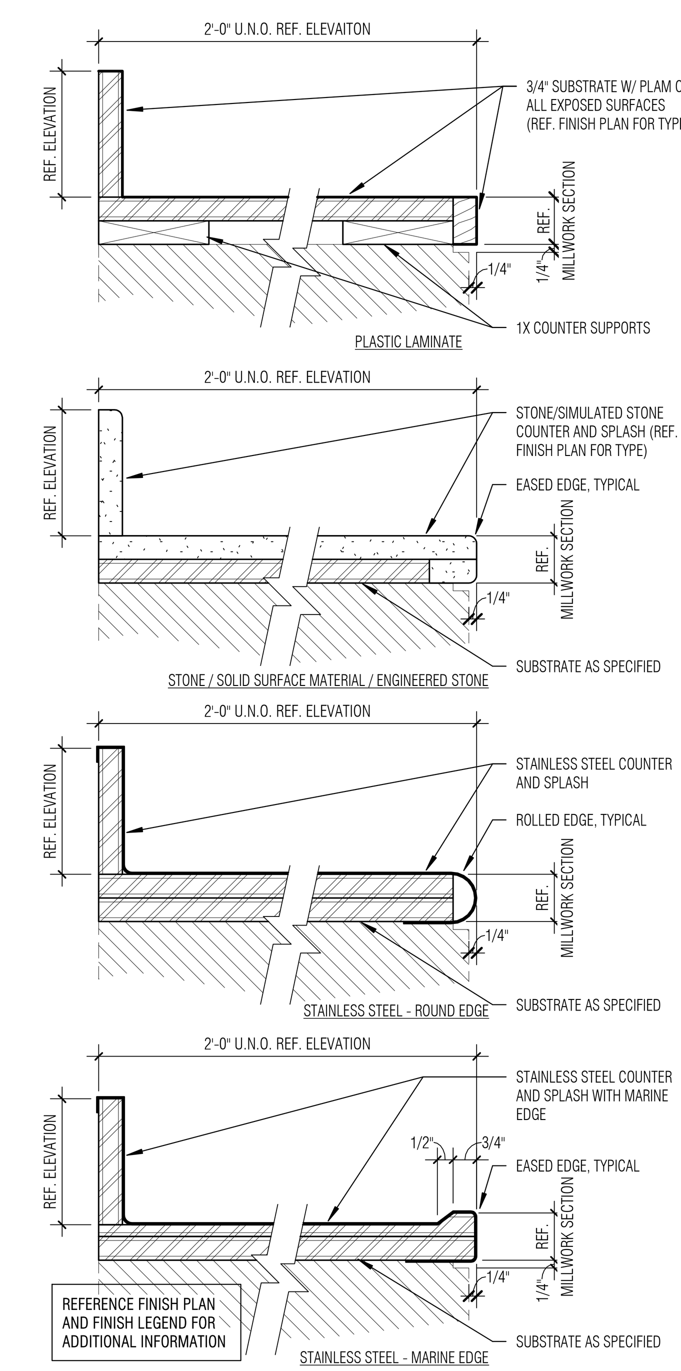

35 MLWK COUNTERTOP TYPICALS
SCALE: 3" = 1'-0"

Architect: Brinkley Sargent Wiginton Architects (972) 960-9970
Landscape: Kendall Landscape Architecture (214) 739-3226
Structural: L.A. Fuess Partners, Inc (214) 593-1118
MEP: M-E Engineers (214) 741-1589
Civil: KSA Engineers, Inc (903) 236-7700
Technology: M-E Engineers (303) 421-6656

BRINKLEY SARGENT WIGINTON ARCHITECTS

LONGVIEW POLICE DEPARTMENT

518 W. SOUTH ST. LONGVIEW, TEXAS 75601

HISTORY		
#	DATE	DESCRIPTION

REGISTERED ARCHITECT HAROLD E. SARGENT 9941 STATE OF TEXAS
08/19/2020

MILLWORK SECTIONS

21719
08/19/2020
A921

BID ISSUE

8/18/2020 4:38:32 PM
D:\Revit Locals\LPD_CENTRAL_A19_bcochener_08-18-2020.rvt

© 2020 Brinkley Sargent Wigginton Architects, Inc.

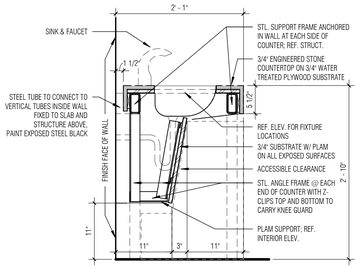

1 ENGINEERED STONE FLOATING SINK COUNTER
SCALE: 1" = 1'-0"

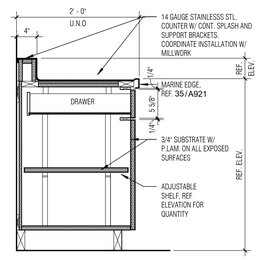

2 MLWK SS BASE (E) W/ MARINE EDGE
SCALE: 1" = 1'-0"

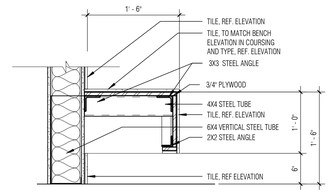

3 FLOATING BENCH DETAIL
SCALE: 1" = 1'-0"

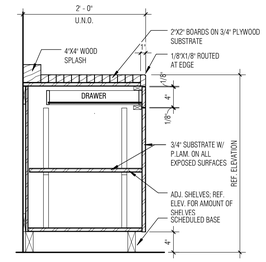

4 MLWK BUTCHER BLOCK BASE (E)
SCALE: 1" = 1'-0"

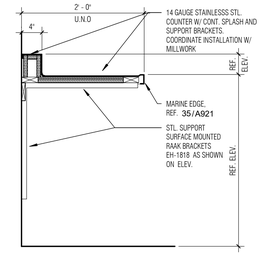

5 MLWK COUNTER W/ MARINE EDGE
SCALE: 1" = 1'-0"

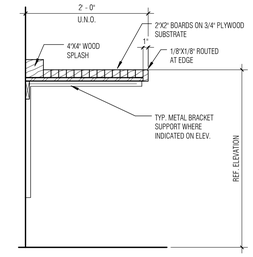

6 MLWK BUTCHER BLOCK COUNTER
SCALE: 1" = 1'-0"

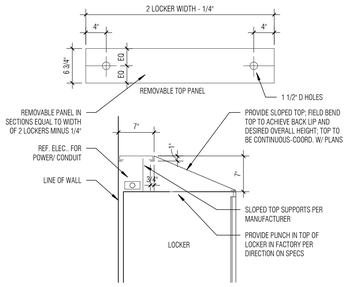

7 POWER @ SINGLE SLOPED LOCKER TOP
SCALE: 1" = 1'-0"

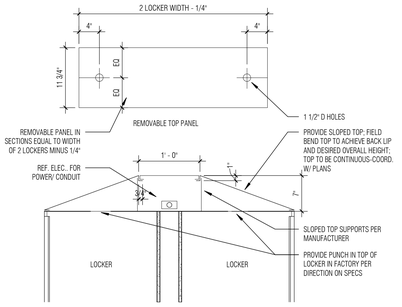

8 POWER @ SLOPED LOCKER TOP
SCALE: 1" = 1'-0"

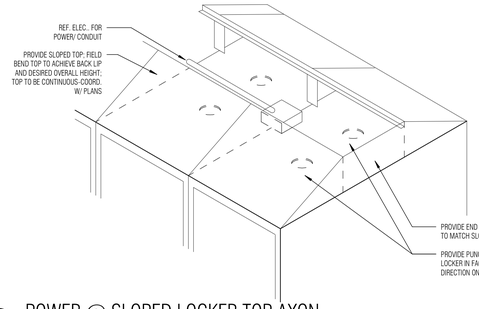

9 POWER @ SLOPED LOCKER TOP AXON
SCALE: 1" = 1'-0"

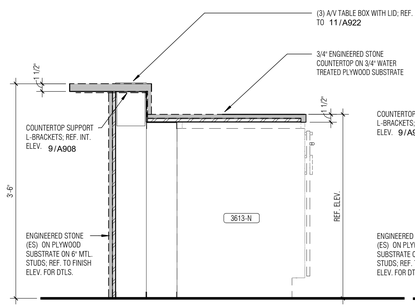

10 MLWK 2138 BREAKROOM COUNTER
SCALE: 1" = 1'-0"

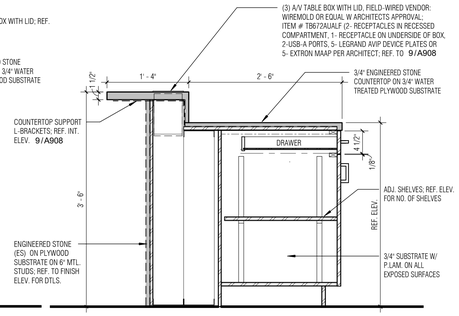

11 MLWK 2138 BREAKROOM COUNTER
SCALE: 1" = 1'-0"

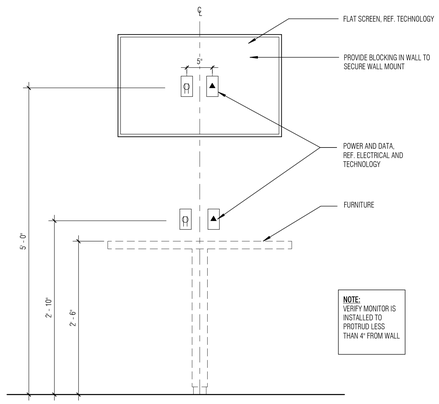

12 MONITOR WALL MOUNTING HEIGHT DETAIL
SCALE: 1" = 1'-0"

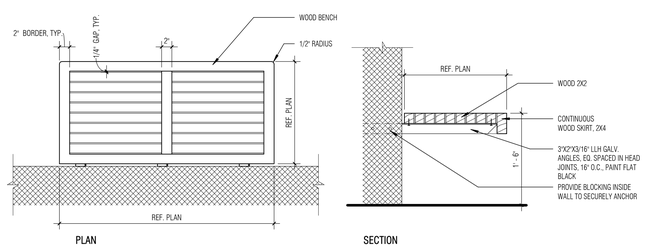

13 CHANGING BENCH DETAILS
SCALE: 1" = 1'-0"

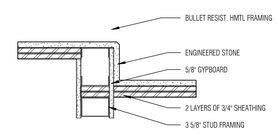

14 ADMIN RECEPTION COUNTER - SPLASH SECTION
SCALE: 1 1/2" = 1'-0"

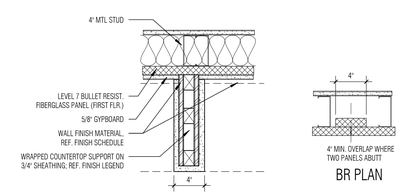

15 COUNTER SUPPORT - PLAN DETAIL
SCALE: 1 1/2" = 1'-0"

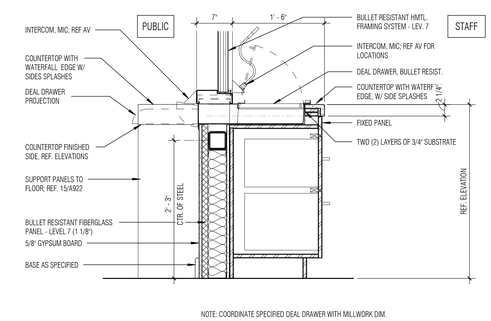

NOTE: COORDINATE SPECIFIED DEAL DRAWER WITH MILLWORK DIM.

16 MLWK BR LEVEL 7 COUNTER W/ DEAL DRAWER
SCALE: 1" = 1'-0"

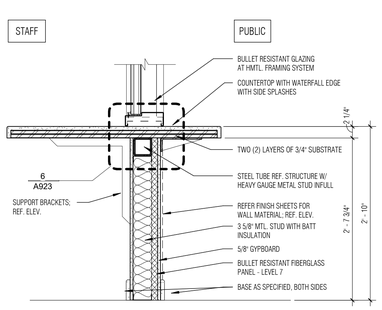

18 MLWK ADMINISTRATION RECEPTION COUNTER
SCALE: 1" = 1'-0"

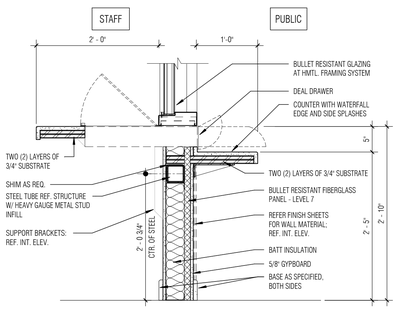

19 MLWK BR RECEPTION COUNTER @ DEAL TRAY
SCALE: 1" = 1'-0"

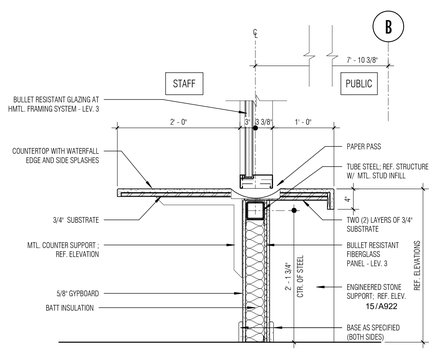

20 MLWK COUNTER AT PAPER PASS (BR LEV. 3)
SCALE: 1" = 1'-0"

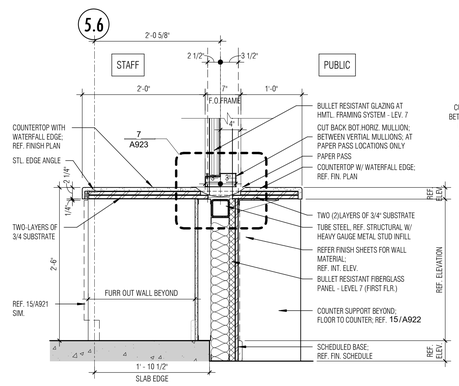

21 MLWK SECURITY COUNTER D (BR LEVEL 7)
SCALE: 1" = 1'-0"

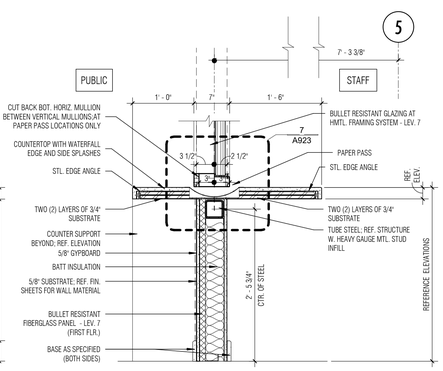

NOTE: LEVEL 7 BULLET RESISTANT PANEL (2:1875"), LEVEL 3 BULLET RESISTANT PANEL(1.25")

22 MLWK COUNTER AT PAPER PASS (BR LEV.7)
SCALE: 1" = 1'-0"

BRINKLEY SARGENT WIGGINTON ARCHITECTS

Architect: Brinkley Sargent Wigginton Architects (972) 960-9970
Landscape: Kendall Landscape Architecture (214) 739-3226
Structural: L.A. Fuess Partners, Inc (214) 593-1118
MEP: M-E Engineers (214) 741-1589
Civil: KSA Engineers, Inc (903) 236-7700
Technology: M-E Engineers (303) 421-6656

LONGVIEW POLICE DEPARTMENT

518 W. SOUTH ST. LONGVIEW, TEXAS 75601

HISTORY		
#	DATE	DESCRIPTION

MILLWORK SECTIONS

21719
08/19/2020

A922

BID ISSUE

8/19/2020 4:39:00 PM

D:\Revit Local\LPD_CENTRAL_A19_Jacobsen_08-19-2020.rvt

© 2020 Brinkley Sargent Wigginton Architects, Inc.

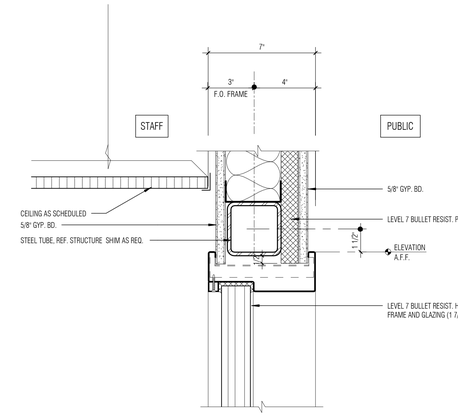

1 MLWK BR HEAD AT LEV. 7
SCALE: 3" = 1'-0"

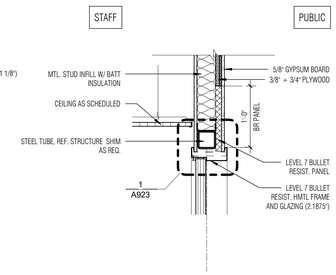

2 MLWK BR HEAD AT SECURITY HM GLAZING
SCALE: 1" = 1'-0"

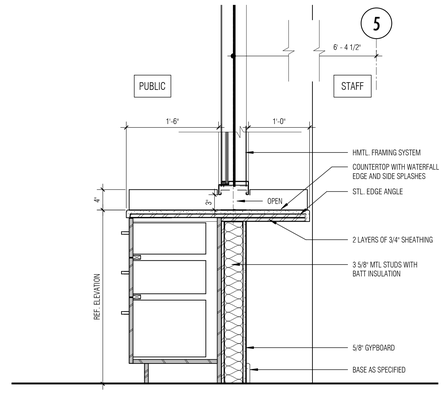

3 MLWK CLERKS COUNTER AT PASS-THRU WINDOW
SCALE: 1" = 1'-0"

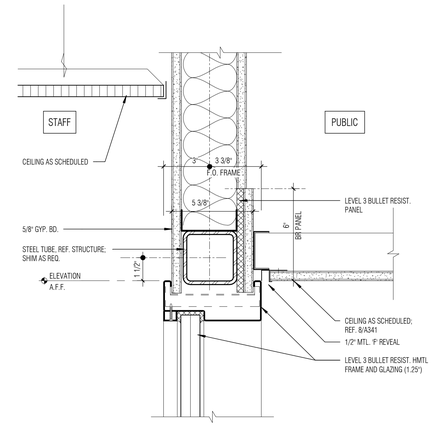

4 MLWK HEADER AT BR (LEV. 3) AT FURR DOWN
SCALE: 3" = 1'-0"

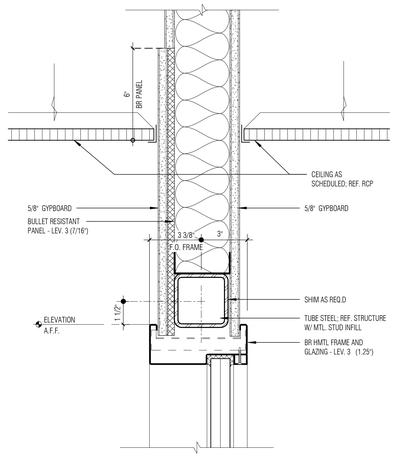

5 MLWK HEADER AT BR (LEV. 3) HMTL FRAME
SCALE: 3" = 1'-0"

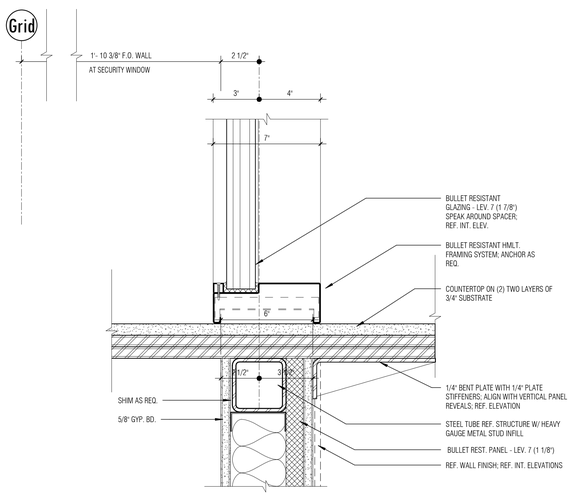

6 MLWK COUNTER SUPPORT AT BR HMTL FRAME
SCALE: 3" = 1'-0"

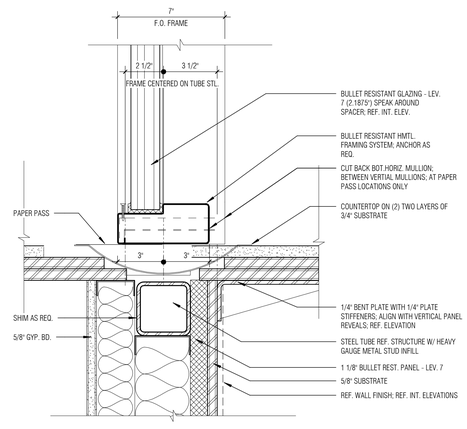

7 MLWK BR GLAZING @ PAPER PASS DETAIL
SCALE: 3" = 1'-0"

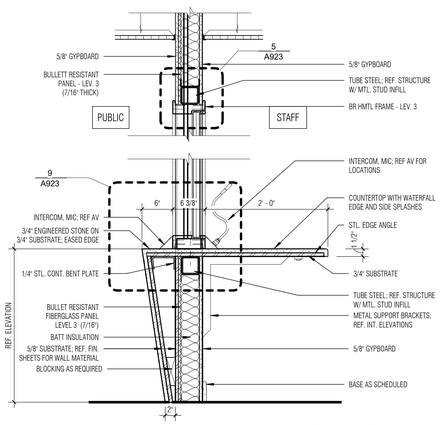

NOTE: LEVEL 3 BULLET RESISTANT AT SECOND & THIRD FLOORS

8 MLWK BR GLAZING AT WEDGE COUNTER
SCALE: 1" = 1'-0"

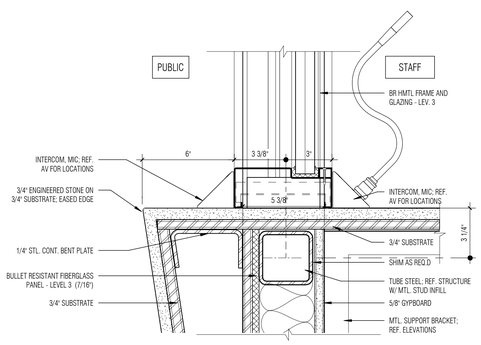

9 MLWK BR GLAZING AT WEDGE COUNTER
SCALE: 3" = 1'-0"

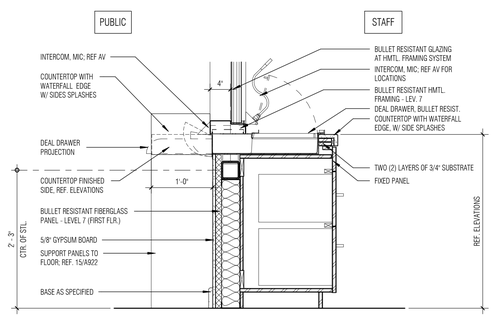

10 MLWK BR (LEV. 7) GLAZING AT DEAL DRAWER
SCALE: 1" = 1'-0"

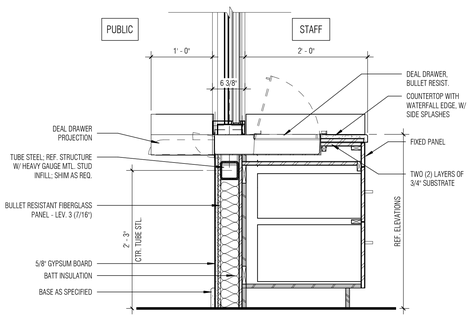

11 MLWK COUNTER AT DEAL DRWR (BR LEV. 3)
SCALE: 1" = 1'-0"

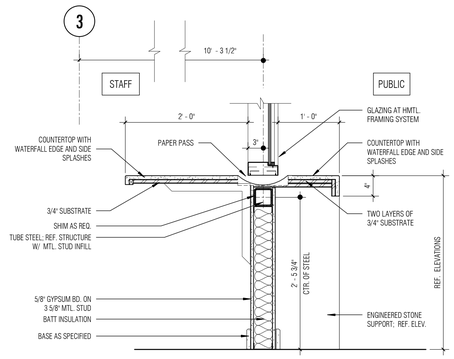

12 MLWK COUNTER WITH PAPER PASS
SCALE: 1" = 1'-0"

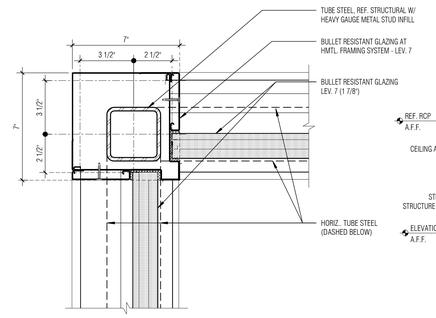

13 MLWK HMTL. MULLION PLAN DETAIL
SCALE: 3" = 1'-0"

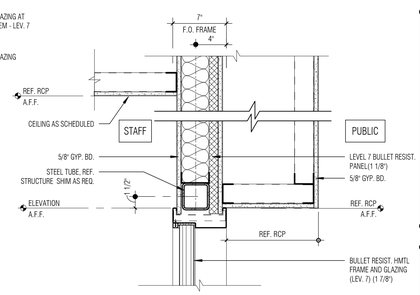

14 MLWK BR HEADER AT LEV. 7 GYP.-BD.
SCALE: 1 1/2" = 1'-0"

Architect: Brinkley Sargent Wigginton Architects (972) 960-9970
Landscape: Kendall Landscape Architecture (214) 739-3226
Structural: L.A. Fuess Partners, Inc (214) 593-1118
MEP: M-E Engineers (214) 741-1589
Civil: KSA Engineers, Inc (903) 236-7700
Technology: M-E Engineers (303) 421-6656
BRINKLEY SARGENT WIGINTON ARCHITECTS

LONGVIEW POLICE DEPARTMENT

518 W. SOUTH ST. LONGVIEW, TEXAS 75601

HISTORY		
#	DATE	DESCRIPTION

REGISTERED ARCHITECT
LEE A. BRINKLEY
9941
STATE OF TEXAS
08/19/2020

MILLWORK SECTIONS

BID ISSUE

21719
08/19/2020
A923

8/19/2020 4:29:28 PM

E:\Revit Locals\LPD_CENTRAL_A19_Jacobsen_08-19-2020.rvt

© 2020 Brinkley Sargent Wigginton Architects, Inc.

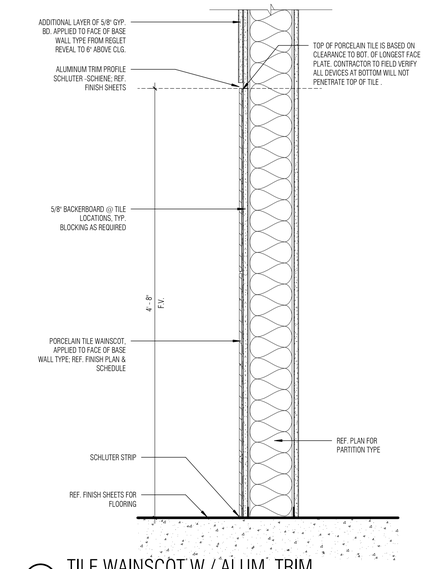

1 TILE WAINSCOT W / ALUM. TRIM
SCALE: 1 1/2" = 1'-0"

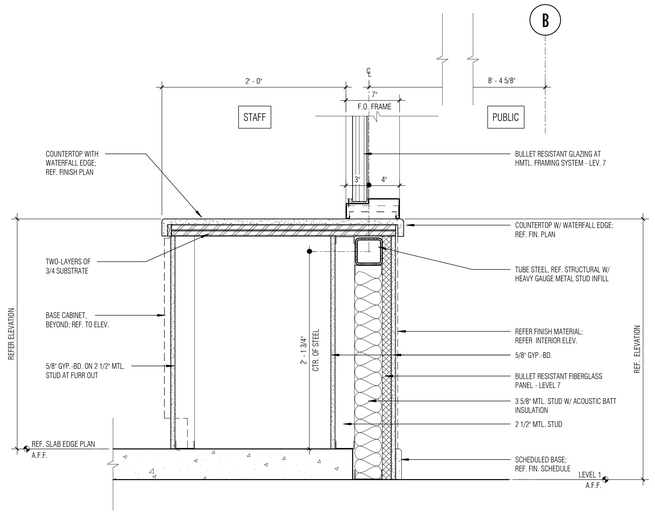

2 MLWK BR LEV. 7 AT SECURITY COUNTER C
SCALE: 1 1/2" = 1'-0"

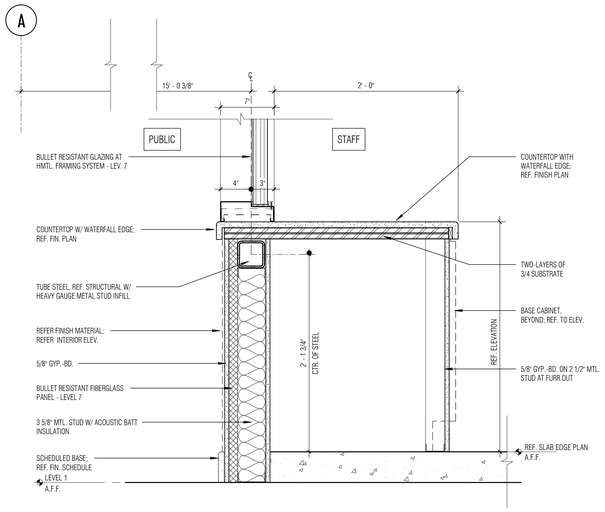

3 MLWK BR LEV. 7 AT SECURITY COUNTER A
SCALE: 1 1/2" = 1'-0"

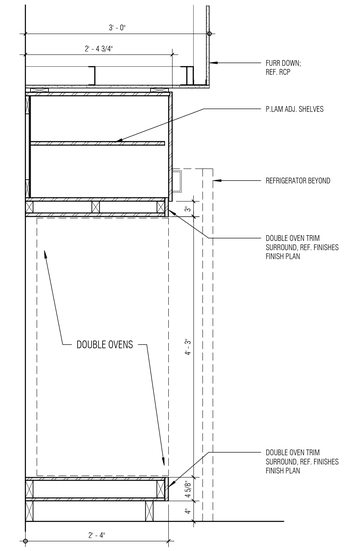

4 MLWK DOUBLE OVENS AT BREAKROOM
SCALE: 1" = 1'-0"

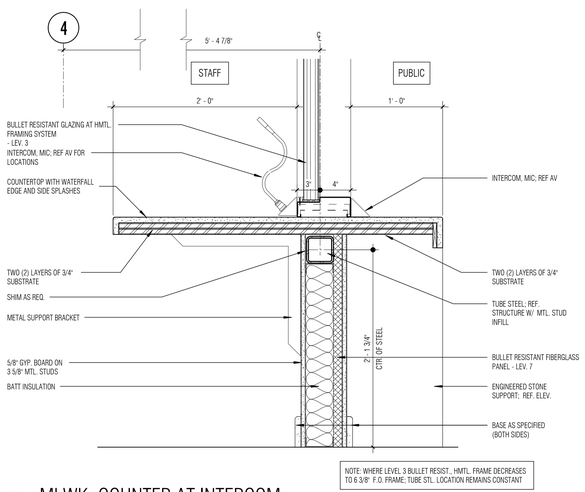

5 MLWK COUNTER AT INTERCOM
SCALE: 1 1/2" = 1'-0"

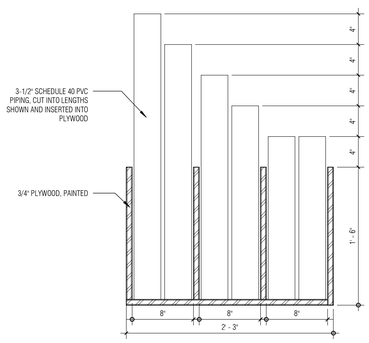

6 MLWK TUBE STORAGE SECTION
SCALE: 1 1/2" = 1'-0"

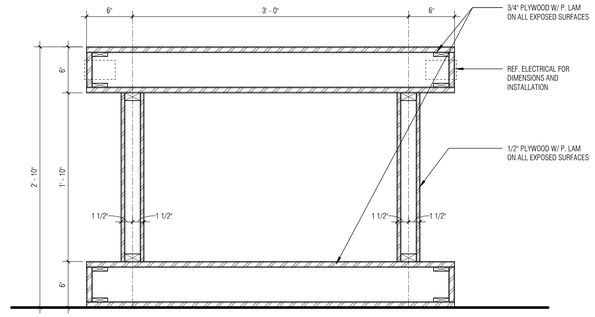

7 MLWK TABLE AT TECH INVEST.
SCALE: 1 1/2" = 1'-0"

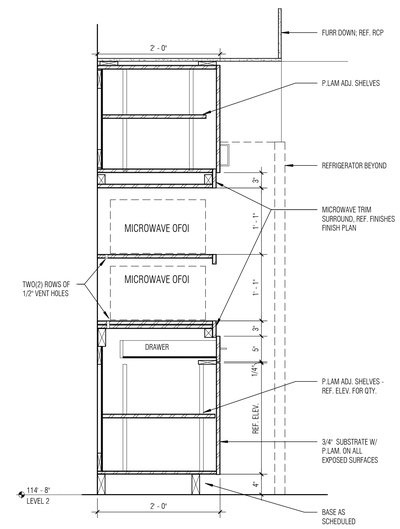

8 MLWK 2138 BREAKROOM MICROWAVE CABINET
SCALE: 1" = 1'-0"

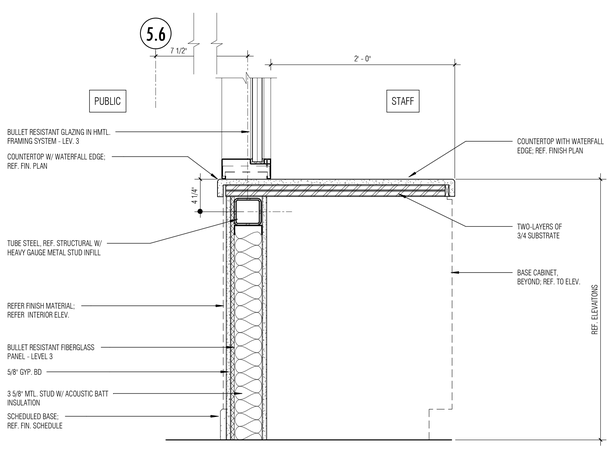

9 MLWK BR LEV. 3 AT HMTL. GLAZING ADMIN. D
SCALE: 1 1/2" = 1'-0"

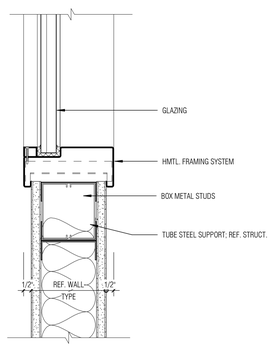

10 MLWK HMTL FRAME
SCALE: 3" = 1'-0"

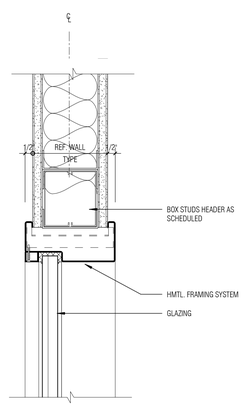

11 MLWK HMTL FRAME HEADER
SCALE: 3" = 1'-0"

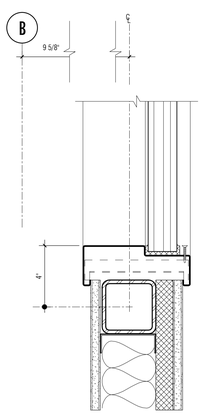

12 MLWK BRLEV. 7 HMTL FRAME SILL
SCALE: 3" = 1'-0"

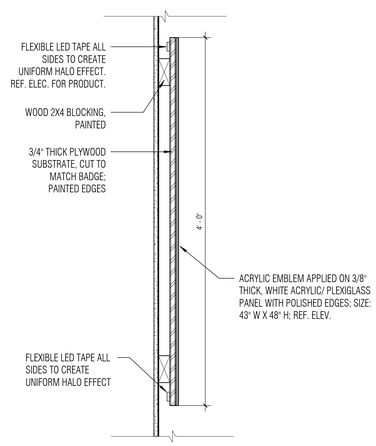

13 BACK-LIT STAND OFF MOUNTING
SCALE: 1 1/2" = 1'-0"

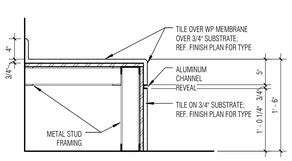

14 ADA BENCH
SCALE: 1" = 1'-0"

Architect: Brinkley Sargent Wigginton Architects (972) 960-9970
Landscape: Kendall Landscape Architecture (214) 739-3226
Structural: L.A. Fuess Partners, Inc (214) 593-1118
MEP: M-E Engineers (214) 741-1589
Civil: KSA Engineers, Inc (903) 236-7700
Technology: M-E Engineers (303) 421-6656

BRINKLEY SARGENT WIGGINTON ARCHITECTS

LONGVIEW POLICE DEPARTMENT

518 W. SOUTH ST. LONGVIEW, TEXAS 75601

HISTORY

#	DATE	DESCRIPTION

REGISTERED ARCHITECT DONALD L. SARGENT 9941 STATE OF TEXAS
08/19/2020

MILLWORK SECTIONS

BID ISSUE

21719
08/19/2020

A924

8/19/2020 4:39:50 PM

D:\Revit Local\LPD_CENTRAL_A19_Sarcomer_08-19-2020.rvt

© 2020 Brinkley Sargent Wigginton Architects, Inc.

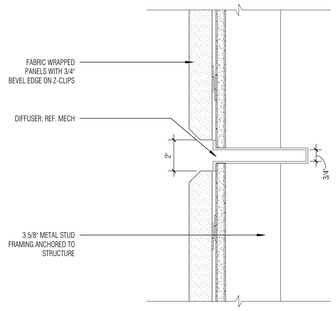

1 ACOUSTIC PANEL DETAIL AT DIFFUSER
SCALE: 3" = 1'-0"

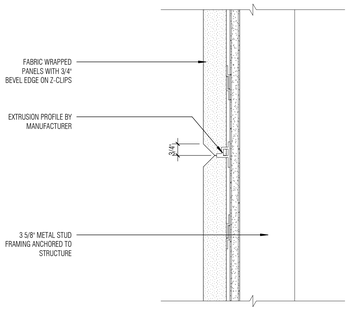

2 ACOUSTIC PANEL DETAIL AT JOINT
SCALE: 3" = 1'-0"

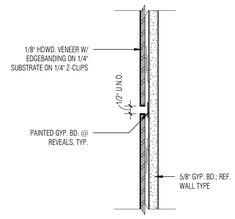

3 HDWD. VENEER AT REVEAL
SCALE: 3" = 1'-0"

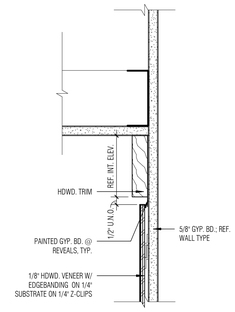

4 HDWD. VENEER AT TRIM NEXT TO CLG.
SCALE: 3" = 1'-0"

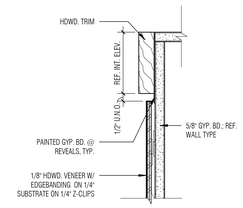

5 HDWD. VENEER AT TRIM NEXT TO SCREEN
SCALE: 3" = 1'-0"

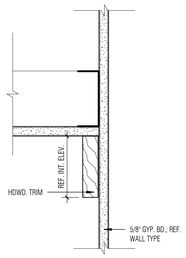

6 HDWD. VENEER AT SCREEN WALL TRIM
SCALE: 3" = 1'-0"

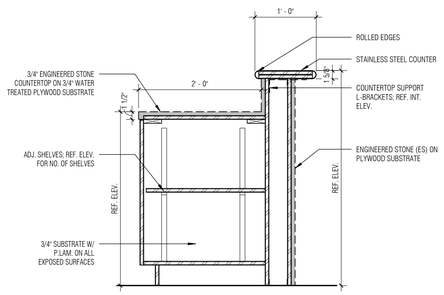

7 MLWK 1202 DESK
SCALE: 1" = 1'-0"

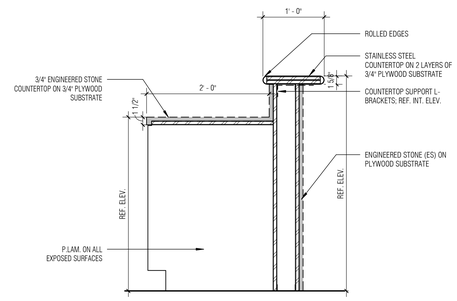

8 MLWK 1202 DESK
SCALE: 1" = 1'-0"

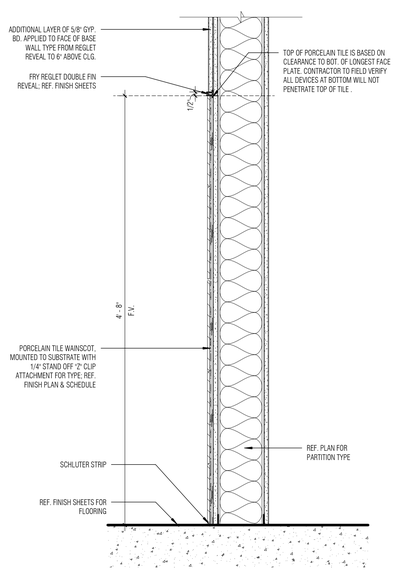

9 TILE WAINSCOT W / FRY REGLET
SCALE: 1 1/2" = 1'-0"

Architect: Brinkley Sargent Wigginton Architects (972) 960-9970
Landscape: Kendall Landscape Architecture (214) 739-3226
Structural: L.A. Fuess Partners, Inc (214) 593-1118
MEP: M-E Engineers (214) 741-1589
Civil: KSA Engineers, Inc (903) 236-7700
Technology: M-E Engineers (303) 421-6656

BRINKLEY SARGENT WIGINTON ARCHITECTS

LONGVIEW POLICE DEPARTMENT

518 W. SOUTH ST. LONGVIEW, TEXAS 75601

HISTORY

#	DATE	DESCRIPTION

REGISTERED ARCHITECT HAROLD SARGENT 9941 STATE OF TEXAS
08/19/2020

MILLWORK SECTIONS

21719
08/19/2020
A925

BID ISSUE

6/15/2020 4:40:17 PM

D:\Revit Locals\LPD_CENTRAL_A19_bscorner_OR-18-2020.rvt

© 2020 Brinkley Sargent Wiginton Architects, Inc.

MISCELLANEOUS

SYMBOL	DESCRIPTION
SIM 1 A101	SECTION NO. / SECTION VIEW SHEET NO.
A M1-01	DETAIL DESIGNATION
AHU 1.01	POWERED EQUIPMENT DESIGNATION
VAV 1.01	NON POWERED EQUIPMENT DESIGNATION
TYPE LENGTH	BASEBOARD EQUIPMENT DESIGNATION
2" 1	SHEET KEY NOTES
	POINT OF DISCONNECTION
	ARROW INDICATES DIRECTION OF FLOW
	EXTERIOR WALL LOUVER (UNDER ARCH. SECTION)
UC	UNDERCUT DOOR (UNDER ARCH. SECTION)
D/L	DOOR LOUVER (UNDER ARCH. SECTION)
L/D	LOUVER DOOR FULL HEIGHT. (UNDER ARCH. SECTION)

SYMBOL	DESCRIPTION
	SUPPLY DIFFUSER-4-WAY THROW
	SUPPLY DIFFUSER-3-WAY THROW
	SUPPLY DIFFUSER-2-WAY THROW
	SUPPLY DIFFUSER-1-WAY THROW
	CEILING ACCESS PANEL
	RETURN DIFFUSER
	EXHAUST DIFFUSER
H	HUMIDIFIER
	FLEXIBLE DUCT CONNECTION
	SUPPLY AIR FLOW SYMBOL
	RETURN/EXHAUST AIR FLOW SYMBOL
	HEAT TRACE

EQUIPMENT DESIGNATION

LEVEL

01 - LEVEL 01
02 - LEVEL 02
03 - LEVEL 03
04 - LEVEL 04
05 - LEVEL 05
06 - LEVEL 06

FCU 1A-01

INDICATES TYPE OF EQUIPMENT

INDICATES UNIT NUMBER WITHIN AREA

INDICATES AREA (A,B,C,D,E,F,G) ETC.

DUCTWORK

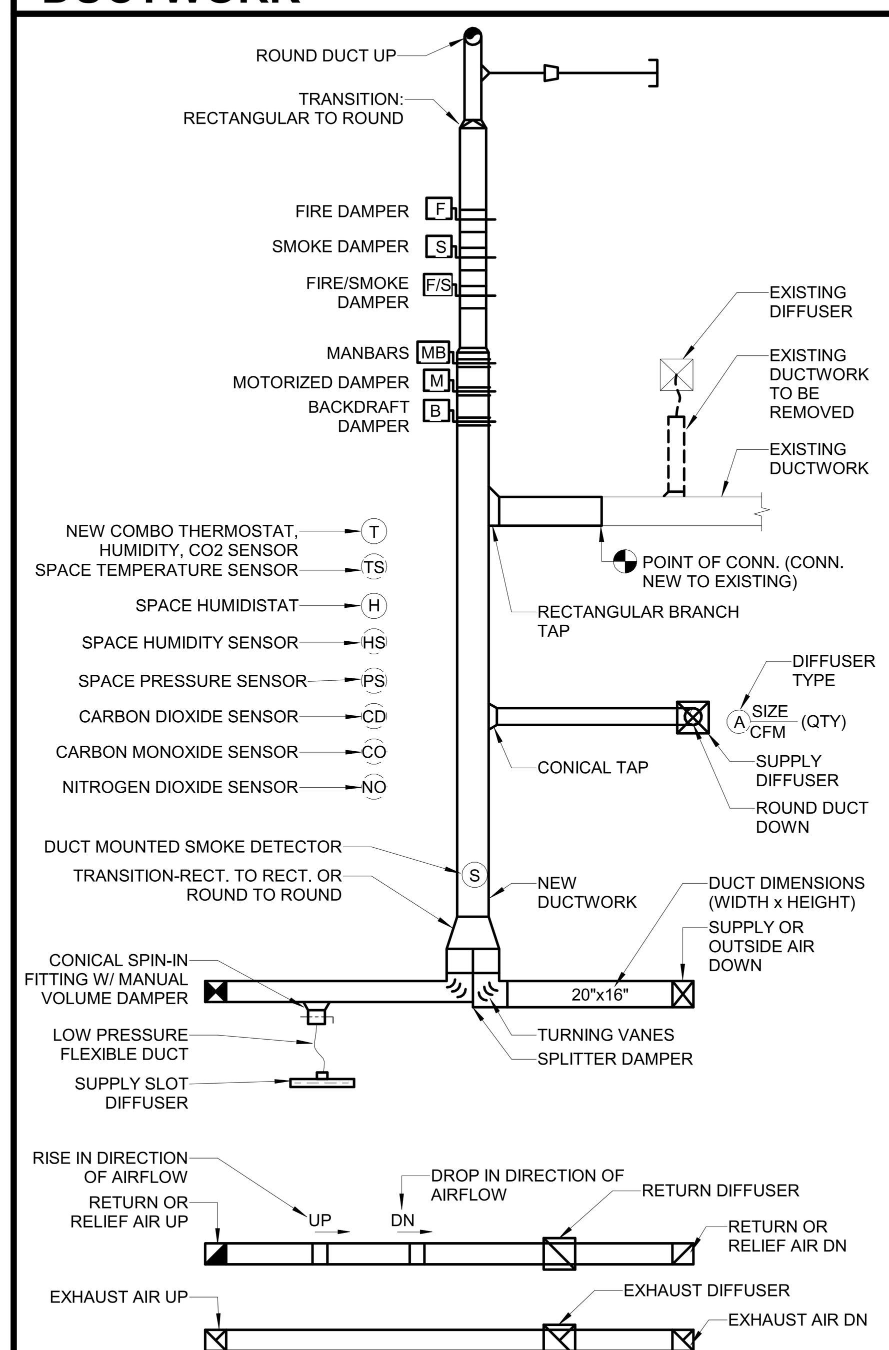

PIPING TYPES

DOUBLE LINE PIPING (2" AND ABOVE)	SINGLE LINE PIPING (UP TO 2")	PIPE TYPE
CHS	CHS	CHILLED WATER SUPPLY
CHR	CHR	CHILLED WATER RETURN
HWS	HWS	HEATING WATER SUPPLY
HWR	HWR	HEATING WATER RETURN
CWS	CWS	CONDENSER WATER SUPPLY
CWR	CWR	CONDENSER WATER RETURN
DR	DR	CONDENSATE DRAIN
HPS	HPS	HIGH PRESSURE STEAM SUPPLY
MPS	MPS	MEDIUM PRESSURE STEAM SUPPLY
LPS	LPS	LOW PRESSURE STEAM SUPPLY
HPR	HPR	HIGH PRESSURE CONDENSATE RETURN
MPR	MPR	MEDIUM PRESSURE CONDENSATE RETURN
LPR	LPR	LOW PRESSURE CONDENSATE RETURN
RS	RS	REFRIGERANT SUCTION
RL	RL	REFRIGERANT LIQUID
RHG	RHG	REFRIGERANT HOT GAS
A	A	CONTROL AIR (PNEUMATIC)
BD	BD	BOILER BLOW DOWN
BF	BF	BOILER FEED
BO	BO	BLOW OFF
CF	CF	CHEMICAL FEEDER
PCS/R	PCS/R	PROCESS COOLING WATER SUPPLY/RETURN
HTWS/R	HTWS/R	HIGH TEMP. HOT WATER SUPPLY/RETURN
PHWS/R	PHWS/R	PRIMARY OR DISTRICT HEATING WATER SUPPLY/RETURN
PCHS/R	PCHS/R	PRIMARY OR DISTRICT CHILLED WATER SUPPLY/RETURN
PR	PR	PUMPED CONDENSATE RETURN
(E)	(E)	EXISTING PIPING
(E)	(E)	EXISTING PIPING TO BE REMOVED

PIPING SYMBOLS

FITTINGS:

SYMBOL	ABBREVIATION	DESCRIPTION
	P&T	PRESSURE/TEMPERATURE PORT TAPS
	CR	CONCENTRIC REDUCER
	ER	ECCENTRIC REDUCER
EJ	EJ	EXPANSION JOINT
	U	UNION
	T	THERMOMETER W/ THERMOWELL
	AV	AIR VENT
	FC	FLEXIBLE PIPE CONNECTOR
FS	FS	FLOW SWITCH
PS	PS	PRESSURE SWITCH
	PG	PRESSURE GAUGE W/ GAUGE COCK
		ELBOW UP
		ELBOW DOWN
		TEE UP
		TEE DOWN
		PIPE CAP OR PLUG
	IV	ISOLATION VALVE, RE: SPECS
	OS&Y	OUTSIDE STEM AND YOKE
	DV	DRAIN VALVE W/ HOSE END CONNECTION
		BALL VALVE W/ HOSE CONNECTION
	CV	CHECK VALVE WITH INDICATION OF FLOW DIRECTION
	PRV	PRESSURE REDUCING VALVE
S	SV	SOLENOID VALVE
F C	FCV	AUTO FLOW CONTROL VALVE W/ TEST PORTS
	CS,BV	CIRCUIT SETTER OR BALANCING VALVE
	GLV	GLOBE VALVE (STRAIGHT PATTERN)
	GLV	GLOBE VALVE (ANGLE PATTERN)
	BFV	BUTTERFLY VALVE
	BV	BALL VALVE
	TCV	AUTOMATIC TEMPERATURE CONTROL VALVE, 2-WAY
	TCV	AUTOMATIC TEMPERATURE CONTROL VALVE, 3-WAY
	BV	BALANCING VALVE
	TMP	TEMPERATURE/PRESSURE RELIEF VALVE
		VALVE IN RISER
	STR	STRAINER W/ BLOW-OFF & CAPPED HOSE END CONNECTION
	ST	STEAM TRAP

ABBREVIATIONS:

A

ABBREVIATION	DESCRIPTION
A	AIR (COMPRESSED)
ABV	ABOVE
A/C	AIR CONDITIONING
AC	ALTERNATING CURRENT
	AIR COMPRESSOR
ACCH	AIR COOLED CHILLER
ACCU	AIR COOLED CONDENSING UNIT
AD	ACCESS DOOR
	AREA DRAIN
ADJ	ADJUSTABLE
AF	AIR FILTER
AFC	ABOVE FINISHED CEILING
AFF	ABOVE FINISHED FLOOR
AFG	ABOVE FINISHED GRADE
AHU	AIR HANDLING UNIT
AL	ALUMINUM
AMB	AMBIENT
AP	ACCESS PANEL
APD	AIR PRESSURE DROP
ARI	AMERICAN REFRIGERANT INSTITUTE
ARCH	ARCHITECT
AS	AIR SEPARATOR
ASHRAE	AMERICAN SOCIETY OF HEATING AND REFRIGERATION ENGINEERS
ASME	AMERICAN SOCIETY OF MECHANICAL ENGINEERS
ASTM	AMERICAN SOCIETY OF TESTING AND MATERIALS
AV	ACID VENT
	AIR VENT
AVG	AVERAGE
AW	ACID WASTE
AWS	AMERICAN WELDING SOCIETY
AUX	AUXILIARY

B

ABBREVIATION	DESCRIPTION
B	BOILER
BC	BELOW COUNTER
B/C	BACK OF CURB
BFV	BUTTERFLY VALVE
BH	BOX HYDRANT
BHP	BRAKE HORSEPOWER
BLDG	BUILDING
BM	BENCHMARK
BOD	BOTTOM OF DUCT (AFF)
BOF	BOTTOM OF FOOTING
BOS	BOTTOM OF STRUCTURE
BT	BATH TUB
	BREAK TANK
BTU	BRITISH THERMAL UNIT
BV	BALL VALVE
BWV	BACK WATER VALVE

C

ABBREVIATION	DESCRIPTION
C	CELSIUS
CAB	CABINET
CAV	CONSTANT AIR VOLUME
CB	CATCH BASIN
CC	COOLING COIL
CD	CONDENSATE DRAIN LINE
CFH	CUBIC FEET PER HOUR
CFM	CUBIC FEET PER MINUTE
CFS	CUBIC FEET PER SECOND
CI	CAST IRON
CIRC	CIRCULATING
CL	CENTERLINE
CLG	CEILING
CLR	CLEAR
CMP	CORRIGATED METAL PIPE
CMU	CONCRETE MASONRY UNIT
CPI	CAST IRON PIPE INSTITUTE
CPVC	CHLORINATED POLYVINYL CHLORIDE
CO	CLEANOUT
COL	COLUMN
COMB	COMBINATION
COMP	COMPRESSOR
CON	CONVERTER
CONC	CONCRETE
	CONCENTRIC
COND	CONDENSER
	CONDENSATE
CONN	CONNECTION
CONT	CONTINUOUS
	CONTINUATION
CONTR	CONTROLLER
	CONTRACTOR
COP	COEFFICIENT OF PERFORMANCE
CRAC	COMPUTER ROOM A/C UNIT
CRT	CATHODE RAY TUBE
CRU	CONDENSATE RETURN UNIT
CT	COOLING TOWER
CTR	CENTER
CU	COPPER
CW	COLD WATER
CWP	CONDENSER WATER PUMP
CWR	CONDENSER WATER RETURN
CWS	CONDENSER WATER SUPPLY
CV	CONSTANT VOLUME

D

ABBREVIATION	DESCRIPTION
dB	DECIBEL
DB	DRY-BULB
DC	DOUBLE DUCT CONSTANT VOLUME
	DIRECT CURRENT
DDC	DIRECT DIGITAL CONTROL
DESIG	DESIGNATION
DEFL	DEFLECTION
DTL	DETAIL
DF	DRINKING FOUNTAIN
DIA	DIAMETER
DIFF	DIFFUSER
DIM	DIMENSION
DISC	DISCONNECT
DN	DOWN
DP	DISCHARGE PLENUM
DPR	DAMPER
DS	DOUNSPOUT
	DOUBLE SUCTION
DV	DOUBLE DUCT VAV
DW	DISHWASHER
DWG	DRAWING
DWH	DOMESTIC WATER HEATER
DWP	DOMESTIC WATER PUMP
DX	DIRECT EXPANSION

E

ABBREVIATION	DESCRIPTION
(E)	EXISTING
EA	EACH
EAT	ENTERING AIR TEMPERATURE
EC	ELECTRICAL CONTRACTOR
ECC	ECCENTRIC
EDB	ENTERING DRY BULB
EDF	ELECTRIC DRINKING FOUNTAIN
EDH	ELECTRIC DUCT HEATER
EDR	EFFECTIVE DIRECT RADIATION
EER	ENERGY EFFICIENCY RATIO
EF	EXHAUST FAN
EFF	EFFICIENCY
EJ	EXPANSION JOINT
EL	ELEVATION
EMRG	EMERGENCY
ENCL	ENCLOSURE
ENGR	ENGINEER
ENT	ENTERING
ES	END SUCTION
	EMERGENCY SHOWER
ESP	EXTERNAL STATIC PRESSURE
ET	EXPANSION TANK
ETR	EXISTING TO REMAIN
EVAP	EVAPORATOR
EWB	ENTERING WET BULB
EWT	ENTERING WATER TEMPERATURE
EX	EXPLOSION PROOF
EXT	EXTERNAL
EXTG	EXISTING

F

ABBREVIATION	DESCRIPTION
F	DEGREE FAHRENHEIT
FBO	FURNISHED BY OTHERS
FCO	FLOOR CLEAN OUT
FCS	FLOOR CONTROL SWITCH
FCU	FAN COIL UNIT
FD	FLOOR DRAIN
	FIRE DAMPER
FDS	FIRE DEPARTMENT SIAMESE
FDV	FIRE DEPARTMENT VALVE
FG	FIBERGLASS
FF	FINAL FILTER
FH	FIRE HYDRANT
FHC	FIRE HOSE CABINET
FHR	FIRE HOSE RACK
FIXT	FIXTURE
FLA	FULL LOAD AMPS
FLEX	FLEXIBLE
FL	FLOW LINES
FLR	FLOOR
FP	FAN POWERED MIXING BOX
	FIRE PUMP
FPI	FINS PER INCH
FPM	FEET PER MINUTE
FRIC	FRICTION
FRZR	FREEZER
FS	FLOW SWITCH
	FIRE SPRINKLER
FSK	FLOOR SINK
FT	FOOT
	FEET
FT WC	FEET, WATER COLUMN
FUT	FUTURE

G

ABBREVIATION	DESCRIPTION
G	GAS
GA	GAUGE
GAL	GALLON
GALV	GALVANIZED
GC	GENERAL CONTRACTOR
GLV	GLOBE VALVE
GND	GROUND
GPD	GALLONS PER DAY
GPM	GALLONS PER MINUTE
GSH	GRAND SENSIBLE HEAT
GV	GATE VALVE

H

ABBREVIATION	DESCRIPTION
HB	HOSE BIBB
HC	HEATING COIL
HD	HEAD
	HUB DRAIN
HF	HUMIDIFIER
HORIZ	HORIZONTAL
HP	HORSEPOWER
	HALON PANEL
HPU	HEAT PUMP UNIT
HKP	HOUSEKEEPING PAD
HSC	HORIZONTAL SPLIT CASE
HSTAT	HUMIDISTAT
HT	HEIGHT
HTG	HEATING
HTR	HEATER
HU	HUMIDIFIER SECTION
HW	HOT WATER
HWC	HOT WATER CIRCULATOR
HWP	HOT WATER PUMP
HWR	HOT WATER RETURN
HWS	HOT WATER SUPPLY
HX	HEAT EXCHANGER
HZ	HERTZ

I

ABBREVIATION	DESCRIPTION
ID	INSIDE DIAMTER
IE	INVERT ELEVATION
IH	INFRARED HEATER
IN	INCH
IN WC	INCH, WATER COLUMN
INSUL	INSULATION
INT	INTERNAL
	INTERIOR
IW	INDIRECT WASTE

J

ABBREVIATION	DESCRIPTION
JB	JUNCTION BOX
JP	JOCKEY PUMP

K

ABBREVIATION	DESCRIPTION
KEC	KITCHEN EQUIPMENT CONTRACTOR
KO	KNOCKOUT
KVA	KILOVOLT AMPS
KW	KILOWATT

L

ABBREVIATION	DESCRIPTION
L	LENGTH
LAT	LEAVING AIR TEMPERATURE
LAV	LAVATORY
LBS	POUNDS
LBS/HR	POUNDS PER HOUR
LF	LINEAR FEET
LP	LOW PRESSURE
LRA	LOCKED ROTOR AMPS
LVG	LEAVING
LVL	LEVEL
LWB	LEAVING WET BULB
LWCO	LOW WATER CUT OFF
LWT	LEAVING WATER TEMPERATURE

M

ABBREVIATION	DESCRIPTION
MA	MAKE-UP AIR
MAT	MIXED AIR TEMPERATURE
MAX	MAXIMUM
MBH	THOUSAND BTUH
MC	MECHANICAL CONTRACTOR
MCA	MINIMUM CIRCUIT AMPACITY
MCC	MOTOR CONTROL CENTER
MECH	MECHANICAL
MFR	MANUFACTURER
MH	MANHOLE
MI	MALLEABLE IRON
MIN	MINIMUM
MOCP	MAXIMUM OVER CURRENT PROTECTION
MP	MEDIUM PRESSURE
MS	MOP SINK
MTD	MOUNTED
MTL	METAL
MU	MAKE-UP
MUA	MAKE-UP AIR UNIT
MVD	MANUAL VOLUME DAMPER

N

ABBREVIATION	DESCRIPTION
(N)	NEW
NC	NORMALLY CLOSED
NFPA	NATIONAL FIRE PROTECTION ASSOCIATION
NIC	NOT IN CONTRACT
NO	NORMALLY OPEN
NO	NUMBER
NTS	NOT TO SCALE

O

ABBREVIATION	DESCRIPTION
OA	OUTSIDE AIR
OAF	OUTSIDE AIR FAN
OAHU	OUTSIDE AIR HANDLING UNIT
OBD	OPPOSED BLADE DAMPER
OC	ON CENTER
OD	OUTSIDE DIAMETER
	OVERFLOW DRAIN
OFCU	OUTSIDE AIR FAN COIL UNIT
OPG	OPENING
OS&Y	OPEN STEM AND YOLK

P

ABBREVIATION	DESCRIPTION
P	PUMP
	PLUMBING EQUIPMENT
PC	PLUMBING CONTRACTOR
PCR	PUMPED CONDENSATE RETURN
PD	PRESSURE DROP
	PLANTER DRAIN
PF	PRE-FILTER
PH	PHASE
	POST HYDRANT
PIV	POST INDICATOR VALVE
PLBG	PLUMBING
PNEU	PNEUMATIC
PNL	PANEL
PNTH	PENTHOUSE
PP	POLYPROPYLENE
PPM	PARTS PER MILLION
PRESS	PRESSURE
PRI	PRIMARY
PRS	PRIMARY REDUCING STATION
PRV	PRESSURE REDUCING VALVE
PSF	POUNDS PER SQUARE FOOT
PSI	POUNDS PER SQUARE INCH
PSIG	POUNDS PER SQUARE INCH, GAUGE
PT	PLUMBING TRIM
PV	PLUG VALVE
PVC	POLYVINYL CHLORIDE
PWL	SOUND POWER LEVEL

Q

ABBREVIATION	DESCRIPTION
QTY	QUANTITY

R

ABBREVIATION	DESCRIPTION
(R)	REMOVE
	RELOCATE
RA	RETURN AIR
RAD	REFRIGERATED AIR DRYER
RAF	RETURN AIR FAN
RAG	RETURN AIR GRILLE
RAT	RETURN AIR TEMPERATURE
RCP	REFLECTED CEILING PLAN
	REINFORCED CONCRETE PIPE
RD	ROOF DRAIN
RE	REFERENCE
	REFER
RECIRC	RECIRCULATE
RED	REDUCER
REFR	REFRIGERATOR
REG	REGISTER
REINF	REINFORCING
REQD	REQUIRED
REV	REVISION
	REVISE
RF	RETURN FAN
RH	RELATIVE HUMIDITY
RHG	REFRIGERANT HOT GAS
RKVA	RUNNING KILOVOLT AMPS
RKW	RUNNING KILOWATTS
RL	REFRIGERANT LIQUID
RLA	RUNNING LOAD AMPS
RM	ROOM
	REFRIGERANT MACHINE
RPM	REVOLUTIONS PER MINUTE
RS	REFRIGERANT SUCTION
RTU	ROOFTOP UNIT
RV	RELIEF VALVE

S

ABBREVIATION	DESCRIPTION
SA	SUPPLY AIR
SAF	SUPPLY AIR FAN
SAG	SUPPLY AIR GRILLE
SAN	SANITARY SEWER
SAR	SUPPLY AIR REGISTER
SCHED	SCHEDULE
SCFM	STANDARD AIR CUBIC FEET PER MINUTE
SCR	SILICON CONTROLLED RECTIFIER
SD	STORM DRAIN
SE	SEWAGE EJECTOR
SEC	SECONDARY
SECT	SECTION
SENS	SENSIBLE
SF	SQUARE FEET
SFCS	SPRINKLER FLOOR CONTROL STATION
SH	SHOWER
SHT	SHEET
SIM	SIMILAR
SK	SINK
SKVA	STARTING KILOVOLT AMPS
SKW	STARTING KILOWATTS
SM	SHEET METAL
SP	STATIC PRESSURE
	SUMP PUMP
SPEC	SPECIFICATION
SPR	SPRINKLER
SQ	SQUARE
SS	STAINLESS STEEL
	SERVICE SINK
SSD	SUBSURFACE DRAIN
SSFU	SANITARY SEWER FIXTURE UNITS
SSSC	SOLID STATE SPEED CONTROL
STD	STANDARD
STL	STEEL
STR	STRAINER
SURF	SURFACE
SUSP	SUSPEND
SV	SANITARY VENT
ST	SOUND TRAP

T

ABBREVIATION	DESCRIPTION
TC	TEMPERATURE CONTROL
TD	TRENCH DRAIN
TDH	TOTAL DYNAMIC HEAD
TF	TRANSFER FAN
TG	TRANSFER GRILLE
TH BLK	THRUST BLOCK
TOD	TOP OF DUCT (AFF)
TOP	TOP OF PIPE (AFF)
TP	TRAP PRIMER
TPD	TRAP PRIMER DEVICE
TSP	TOTAL STATIC PRESSURE
TSTAT	THERMOSTAT
TYP	TYPICAL

U

ABBREVIATION	DESCRIPTION
U	URINAL
U/F	UNDERFLOOR
U/S	UNDERSLAB
UCD	UNDERCUT DOOR
UG	UNDERGROUND
UH	UNIT HEATER
UL	UNDERWRITERS LABORATORIES
UNO	UNLESS NOTED OTHERWISE
UTR	UP THROUGH ROOF

V

ABBREVIATION	DESCRIPTION
V	VOLT, VENT
VA	VOLT-AMPERE
VAC	VACUUM
VAV	VARIABLE AIR VOLUME
VB	VALVE BOX
	VACUUM BREAKER
VCP	VITRIFIED CLAY PIPE
VD	VOLUME DAMPER
VEL	VELOCITY
VERT	VERTICAL
VFD	VARIABLE FREUENCY DRIVE
VIB	VALVE IN BOX
VOV	VALVE ON VERTICAL
VP	VACUUM PUMP
VR	VARIABLE AIR VOLUME REHEAT
VSD	VARIABLE SPEED DRIVE
VTR	VENT THROUGH ROOF

W

ABBREVIATION	DESCRIPTION
W	WATT, WASTE, WIDTH
W/	WITH
W/O	WITHOUT
WB	WETBULB
WC	WATER CLOSET
WCO	WALL CLEANOUT
WF	WATER FILTER
WH	WALL HYDRANT
WM	WATER METER
WP	WEATHERPROOF
WPD	WATER PRESSURE DROP
WWF	WELDED WIRE FABRIC
WT	WATER TIGHT
	WEIGHT

Y

ABBREVIATION	DESCRIPTION
Y	YARD HYDRANT

Z

ABBREVIATION	DESCRIPTION
Z	ZONE

BRINKLEY SARGENT WIGINTON ARCHITECTS

Architect: Brinkley Sargent Wiginton Architects (972) 960-9970
Landscape: Kendall Landscape Architecture (214) 739-3226
Structural: L.A. Fuess Partners, Inc (214) 593-1118
MEP: M-E Engineers (214) 741-1589
Civil: KSA Engineers, Inc (903) 236-7700
Technology: M-E Engineers (303) 421-6656

LONGVIEW POLICE DEPARTMENT

518 W. SOUTH ST. LONGVIEW, TEXAS 75601

History

#	Date	Description

STATE OF TEXAS
LAUREN F. BERRY
117369
LICENSED PROFESSIONAL ENGINEER
ME Engineers, Inc.
F-10231
08/19/2020

MECHANICAL LEGEND

BID ISSUE

20513
08/19/2020
M001

8/14/2020 11:03:45 AM
C:\Revit Projects\2019\LPD_CENTRAL_M19_christopher.hallPZCUX.rvt

© 2020 Brinkley Sargent Wiginton Architects, Inc.

GENERAL MECHANICAL CONTRACT REQUIREMENTS:

GENERAL:

1. UNLESS OTHERWISE NOTED, THE WORK DESCRIBED ON THE PLANS AND SPECIFICATIONS SHALL INCLUDE THE FURNISHING AND INSTALLATION OF ALL LABOR AND MATERIALS NECESSARY FOR COMPLETE AND OPERATIONAL HVAC, FIRE PROTECTION AND PLUMBING SYSTEMS. CONTRACTOR SHALL FURNISH THESE EVEN IF ITEMS REQUIRED TO ACHIEVE THIS (I.E. OFFSETS, ISOLATION AND BALANCING DEVICES, MAINTENANCE CLEARANCES, ETC.) ARE NOT SPECIFICALLY SHOWN.

2. DATA GIVEN ON THE DRAWINGS IS AS EXACT AS COULD BE SECURED. ABSOLUTE ACCURACY IS NOT GUARANTEED AND THE CONTRACTOR SHALL OBTAIN AND VERIFY EXACT LOCATIONS, MEASUREMENTS, LEVELS, SPACE REQUIREMENTS, POTENTIAL CONFLICTS WITH OTHER TRADES, ETC. AT THE SITE AND SHALL SATISFACTORILY ADAPT HIS WORK TO THE ACTUAL CONDITIONS OF THE JOB.

3. THE DRAWINGS ARE DIAGRAMMATICAL IN NATURE AND SHALL NOT BE SCALED. THEY SHOW CERTAIN PHYSICAL RELATIONSHIPS WHICH MUST BE ESTABLISHED WITHIN THE DIVISION 21,22 AND 23 WORK AND ITS INTERFACE WITH OTHER WORK. ESTABLISHING THIS RELATIONSHIP IN THE FIELD IS THE EXCLUSIVE RESPONSIBILITY OF THE CONTRACTOR. THIS DIVISION SHALL COORDINATE ITS WORK WITH ALL DIVISIONS OF THE WORK AND ADJUST ITS WORK AS REQUIRED BY THE ACTUAL CONDITIONS OF THE PROJECT.

   A. THE CONTRACTOR SHALL VISIT THE SITE BEFORE SUBMITTING A BID TO BECOME THOROUGHLY FAMILIAR WITH THE ACTUAL CONDITIONS OF THE PROJECT. NO EXTRAS WILL BE ALLOWED DUE TO LACK OF KNOWLEDGE OF EXISTING CONDITIONS.

   B. CERTAIN SYSTEMS REQUIRE ENGINEERING OF INSTALLATION DETAILS BY CONTRACTOR. UNLESS FULLY DETAILED IN THE CONTRACT DOCUMENTS, SUCH ENGINEERING IS THE EXCLUSIVE RESPONSIBILITY OF THE CONTRACTOR.

   C. IT IS THE CONTRACTOR'S RESPONSIBILITY TO DETERMINE WHERE CLEARANCES ARE LIMITED, AND WHERE INSTALLATION DRAWINGS OR SCHEMATICS, "CONSTRUCTION DRAWINGS", OR COORDINATION DRAWINGS MAY BE REQUIRED IN ACCORDANCE WITH, OR IN EXCESS OF, THOSE REQUIRED BY THE SPECIFICATIONS. THE CONTRACTOR SHALL PREPARE ALL SUCH COORDINATION DRAWINGS AS PART OF THE BASE CONTRACT. SUCH DRAWINGS MAY BE SUBMITTED TO THE ARCHITECT/ENGINEER FOR RECORD AND COMMENT. ANY WORK INSTALLED WITHOUT APPROVED COORDINATION DRAWINGS IS DONE AT THE CONTRACTOR'S RISK.

4. THESE NOTES ONLY SUPPLEMENT, AND DO NOT REPLACE, THE SPECIFICATIONS.

5. DEFINITIONS AND TERMINOLOGY

   A. THE DEFINITIONS OF DIVISION 1 AND THE GENERAL CONDITIONS OF THIS SPECIFICATION ALSO APPLY TO THE DIVISION 21,22 AND 23 CONTRACT DOCUMENTS.

   B. "CONTRACT DOCUMENTS" CONSTITUTE THE DRAWINGS, SPECIFICATIONS, GENERAL CONDITIONS, PROJECT MANUALS, ETC., PREPARED BY ENGINEER (OR OTHER DESIGN PROFESSIONAL IN ASSOCIATION WITH ENGINEER) FOR CONTRACTOR'S BID OR CONTRACTOR'S NEGOTIATIONS WITH THE OWNER. THE DIVISION 21,22 AND 23 DRAWINGS AND SPECIFICATIONS PREPARED BY THE ENGINEER ARE NOT CONSTRUCTION DOCUMENTS.

   C. "CONSTRUCTION DOCUMENTS", "CONSTRUCTION DRAWINGS", AND SIMILAR TERMS FOR DIVISION 21,22 AND 23 WORK REFER TO INSTALLATION DIAGRAMS, SHOP DRAWINGS AND COORDINATION DRAWINGS PREPARED BY THE CONTRACTOR USING THE DESIGN INTENT INDICATED ON THE ENGINEER'S CONTRACT DOCUMENTS. THESE SPECIFICATIONS DETAIL THE CONTRACTOR'S RESPONSIBILITY FOR "ENGINEERING BY CONTRACTOR" AND FOR PREPARATION OF CONSTRUCTION DOCUMENTS.

   D. "(N)" INDICATES "NEW" EQUIPMENT TO BE PROVIDED UNDER THIS CONTRACT.

   E. "(E)" INDICATES "EXISTING" EQUIPMENT ON SITE WHICH MAY OR MAY NOT NEED TO BE RELOCATED AS A PART OF THIS WORK.

   F. "(R)" INDICATES EXISTING EQUIPMENT TO BE RELOCATED AS PART OF THIS WORK.

   G. "FURNISH" MEANS TO "SUPPLY" AND USUALLY REFERS TO AN ITEM OF EQUIPMENT.

   H. "INSTALL" MEANS TO "SET IN PLACE, CONNECT AND PLACE IN FULL OPERATIONAL ORDER".

   I. "PROVIDE" MEANS TO "FURNISH AND INSTALL".

   J. "EQUIVALENT" MEANS "MEETS THE SPECIFICATIONS OF THE REFERENCE PRODUCT OR ITEM IN ALL SIGNIFICANT ASPECTS." SIGNIFICANT ASPECTS SHALL BE AS DETERMINED BY THE ARCHITECT/ENGINEER.

   K. "WORK BY OTHER(S) DIVISIONS"; "RE: XX DIVISION", AND SIMILAR EXPRESSIONS MEANS WORK TO BE PERFORMED UNDER THE CONTRACT DOCUMENTS, BUT NOT NECESSARILY UNDER THE DIVISION OR SECTION OF THE WORK ON WHICH THE NOTE APPEARS. IT IS THE CONTRACTOR'S SOLE RESPONSIBILITY TO COORDINATE THE WORK OF THE CONTRACT BETWEEN HIS/HER SUPPLIERS, SUBCONTRACTORS AND EMPLOYEES. IF CLARIFICATION IS REQUIRED, CONSULT ARCHITECT/ENGINEER BEFORE SUBMITTING BID.

   L. BY INFERENCE, ANY REFERENCE TO A "CONTRACTOR" OR "SUB-CONTRACTOR" MEANS THE ENTITY WHICH HAS CONTRACTED WITH THE OWNER FOR THE WORK OF THE CONTRACT DOCUMENTS.

   M. "ENGINEER" MEANS THE DESIGN PROFESSIONAL FIRM WHICH HAS PREPARED THESE CONTRACT DOCUMENTS. ALL QUESTIONS, SUBMITTALS, ETC. OF THIS DIVISION SHALL BE ROUTED THROUGH THE ARCHITECT TO THE ENGINEER (THROUGH PROPER CONTRACTUAL CHANNELS).

EXISTING BUILDING:

1. THE CONTRACTOR'S ATTENTION IS CALLED TO THE FACT THAT THE EXISTING BUILDING WILL BE OCCUPIED BY THE OWNER DURING CONSTRUCTION. CONTINUED OPERATION OF THE FACILITY SHALL NOT BE HINDERED BY THIS WORK. THE CONTRACTOR SHALL ACCOUNT FOR ALL ADDITIONAL COSTS WHICH MAY BE INCURRED BY HIM DUE TO THE DIFFICULTY OF WORKING OVER AND AROUND EMPLOYEES, DESKS, EQUIPMENT, ETC.; AND DUE TO THE HOURS OF THE DAY IN WHICH AN AREA MAY BE AVAILABLE WHEN SUBMITTING HIS BID.

2. MAINTAIN A MARK-UP SET OF DRAWINGS WHICH INDICATE VARIATIONS IN THE ACTUAL INSTALLATION FROM THE ORIGINAL DESIGN. SURRENDER DRAWINGS TO OWNER UPON COMPLETION.

3. ALL CAPACITIES ARE SCHEDULED AT JOBSITE ALTITUDE OF 5300 FT. ABOVE SEA LEVEL.

4. COORDINATE ALL PENETRATIONS OF THE FLOOR SLAB PRIOR TO COMMENCING WORK UTILIZE X-RAY AND VISUAL INVESTIGATION OF EXISTING CONDITIONS AS REQUIRED PRIOR TO DRILLING OR CUTTING. COORDINATE ALL NEW PENETRATIONS WITH OTHER DIVISIONS OF THE WORK. ALL CONTRACTORS ARE INDIVIDUALLY RESPONSIBLE FOR ALL PENETRATIONS REQUIRED BY THEIR DIVISIONS.

ELECTRICAL COORDINATION:

1. VERIFY THE ELECTRICAL SERVICE PROVIDED BY THE ELECTRICAL CONTRACTOR BEFORE ORDERING ANY MECHANICAL EQUIPMENT REQUIRING ELECTRICAL CONNECTIONS.

2. PROVIDE PREMIUM EFFICIENCY MOTORS WITH 1.15 SERVICE FACTOR ON ALL EQUIPMENT, MOTORS SHALL BE CAPABLE OF OPERATING CONTINUOUSLY AT 105°F UNDER JOBSITE CONDITIONS AND ALTITUDE.

3. UNLESS NOTED OTHERWISE, ALL MECHANICAL EQUIPMENT SHALL BE PROVIDED WITH HOA SWITCH AND STARTER COMPATIBLE WITH EQUIPMENT AND BMS SYSTEM. STARTERS SHALL BE PROVIDED BY DIVISION 21,22 AND 23 UNLESS IN A MOTOR CONTROL CENTER. ALL DISCONNECTS SHALL BE FURNISHED BY DIVISION 26.

4. THE ELECTRICAL POWER FOR CERTAIN EQUIPMENT PROVIDED UNDER DIVISION 21,22 AND 23 HAS NOT BEEN SPECIFICALLY INDICATED ON THE ELECTRICAL DRAWINGS AND MUST BE PROVIDED BY AND FIELD COORDINATED BY THE DIVISION 21,22 AND 23 TRADE REQUIRING SUCH POWER.

   SUFFICIENT POWER FOR THIS PURPOSE SHALL BE FURNISHED AS "SPARE", DEDICATED CIRCUIT CAPACITY IN DIVISION 26'S PANELBOARDS. ALL WIRING, CONDUIT AND ELECTRICAL DEVICES DOWNSTREAM OF THE PANELBOARDS IS THE RESPONSIBILITY OF THE DIVISION 21,22 AND 23 TRADE REQUIRING THE POWER UNLESS OTHERWISE SHOWN ON THE ELECTRICAL DRAWINGS.

   SUCH EQUIPMENT IS HEREBY DEFINED AS:

   A. ELECTRICAL HEAT TRACE. REQUIRED HEAT TRACE LOCATIONS, CAPACITIES AND SPECIFICATION ARE SHOWN OR INDICATED ON THE DRAWINGS. REFER TO SPECIFICATIONS FOR ADDITIONAL INFORMATION.

   B. FIRE PROTECTION AIR COMPRESSORS, DRY-PIPE CONTROL PANELS AND VALVES. REQUIRED CONNECTIONS ARE INCLUDED IN THE DIVISION 21 WORK, AND WILL BE SHOWN BY THAT CONTRACTOR'S ENGINEERED SYSTEM DESIGN DRAWINGS.

      (1) PRE-ACTION SYSTEM INITIATION SIGNALS (SUCH AS SMOKE DETECTORS, OR GENERAL ALARM CONDITIONS IN A PRE-ACTION ZONE) SHALL BE PROVIDED UNDER DIVISION 28 FIRE-ALARM WORK.

      (2) DIVISION 21 SHALL PROVIDE PRE-ACTION CONTROL PANEL AND INTERCONNECTION BETWEEN NEAREST SUITABLE FIRE ALARM PANEL AND LOCATION OF PRE-ACTION VALVE(S).

      (3) DIVISION 28 SHALL PROVIDE INTERCONNECTION BETWEEN FIRE COMMAND CENTER ALARM PANEL (PROVIDED UNDER DIVISION 28) AND REMOTE COMMUNICATION FIRE ALARM PANEL (PROVIDED UNDER DIVISION 28).

   C. TEMPERATURE CONTROL PANELS, CONTROL AIR COMPRESSORS AND LINE VOLTAGE POWER FOR 24V CONTROL TRANSFORMERS. REQUIRED CONNECTION ARE INCLUDED IN DIVISION 230900 AND WILL BE SHOWN BY THAT CONTRACTOR'S CONTROL SUBMITTAL DRAWINGS.

   D. IT IS NOT PERMISSIBLE TO UTILIZE "SPARE" POWER FROM ADJACENT POWER CIRCUITS TO SERVE ANY OF THE ABOVE LOADS. ALL POWER MUST COME FROM DEDICATED CIRCUITS.

5. SMOKE DETECTORS:

   FOR AIR HANDLING UNITS AND AIR SYSTEMS WITH A CAPACITY EXCEEDING 2000 CFM, PROVIDE UL LISTED SMOKE DETECTORS IN RETURN AIR SYSTEMS IN ACCORDANCE WITH THE INTERNATIONAL MECHANICAL CODE AND ELSEWHERE AS SHOWN ON THE DRAWINGS.

   SMOKE DETECTORS WILL BE FURNISHED AND SET IN PLACE UNDER THIS DIVISION. DETECTORS WILL BE WIRED UNDER DIVISION 28. SMOKE DETECTORS MUST BE OF THE SAME MANUFACTURER, AND COMPATIBLE WITH THE FIRE FLARM SYSTEM PROVIDED UNDER DIVISION 28 (IF APPLICABLE).

   CONNECT RELAY(S) TO FAN CONTROL CIRCUIT TO STOP FAN WHEN SMOKE IS DETECTED.

INSTALLATION:

1. SUSPEND EACH TRADE'S WORK SEPARATELY FROM THE STRUCTURE. DUCTWORK SHALL BE HELD TIGHT TO STRUCTURE EXCEPT WHERE OTHERWISE SHOWN.

2. INSTALL ALL EQUIPMENT AND MATERIALS IN ACCORDANCE WITH MANUFACTURER'S RECOMMENDATIONS UNLESS SPECIFICALLY INDICATED OTHERWISE OR WHERE LOCAL CODES OR REGULATIONS TAKE PRECEDENCE.

3. PROVIDE MANUFACTURER'S RECOMMENDED SERVICE CLEARANCE AROUND ALL EQUIPMENT REQUIRING SAME.

4. PROVIDE FOR SAFE CONDUCT OF THE WORK, CAREFUL REMOVAL AND DISPOSITION OF MATERIALS AND PROTECTION OF PROPERTY WHICH IS TO REMAIN UNDISTURBED.

5. PROVIDE ACCESS DOORS FOR ALL EQUIPMENT, VALVES, CLEANOUTS, ACTUATORS AND CONTROLS WHICH REQUIRE ACCESS FOR ADJUSTMENT OR SERVICING AND WHICH ARE LOCATED IN OTHERWISE INACCESSIBLE LOCATIONS.

   A. FOR EQUIPMENT LOCATED IN "ACCESSIBLE LOCATIONS" SUCH AS LAY-IN CEILINGS: LOCATE EQUIPMENT TO PROVIDE ADEQUATE SERVICE CLEARANCE FOR NORMAL MAINTENANCE WITHOUT REMOVING ARCHITECTURAL, ELECTRICAL OR STRUCTURAL ELEMENTS SUCH AS THE CEILING SUPPORT SYSTEM, ELECTRICAL FIXTURES, ETC. "NORMAL MAINTENANCE" INCLUDES, BUT IS NOT LIMITED TO:FILTER CHANGING; GREASING OF BEARINGS; USING P/T PORTS FOR PRESSURE OR TEMPERATURE MEASUREMENTS; SERVICING CONTROL VALVES AND SERVICING CONTROL PANELS.

6. ISOLATE ALL PRESSURIZED PIPE (WATER, ETC.) AT EACH RISER, BRANCH, PIECE OF EQUIPMENT, AND AREA SERVED.

7. PROVIDE PRIMERS FOR ALL FLOOR DRAINS AND FLOOR SINKS SHOWN ON DRAWINGS. PRIMERS MAY BE CONNECTED TO FLUSH FIXTURES OR BE STAND ALONE. SEE SPECIFICATIONS.

8. NO DOMESTIC WATER, CHILLED WATER, OR HEATING WATER LINES SHALL BE LOCATED EXPOSED IN FINISHED SPACES OR BELOW THE BUILDING SLAB UNLESS SHOWN OTHERWISE ON THE DRAWINGS.

9. NO GAS LINES SHALL BE LOCATED BELOW BUILDING SLAB.

10. ALL CURBS, ROOF JACKS, ROOF THIMBLES, SANITARY VENTS, ROOF DRAINS, ETC. SHALL BE COMPATIBLE WITH ROOFING SYSTEM TO BE PROVIDED. REFERENCE ARCHITECTURAL DIVISION FOR REQUIRED FLASHING DETAILS.

11. MECHANICAL CONTRACTOR IS RESPONSIBLE FOR PROVIDING ALL CONCRETE EQUIPMENT PAD DIMENSIONS, BASED ON THE FINAL EQUIPMENT SELECTION, TO THE STRUCTURAL AND GENERAL CONTRACTOR FOR INCLUSION IN THOSE CONTRACTOR'S WORK AS DESCRIBED BY THE GENERAL CONTRACTOR.

12. WARRANTY: AT A MINIMUM, THE ENTIRE MECHANICAL SYSTEM SHALL BE WARRANTED AGAINST DEFECTS IN MATERIALS AND WORKMANSHIP FOR A PERIOD OF ONE (1) YEAR AFTER ACCEPTANCE OF THE SYSTEM BY THE OWNER. REFER TO INDIVIDUAL SPECIFICATION SECTIONS FOR SPECIFIC WARRANTY REQUIREMENTS.

DUCTWORK INSTALLATION:

1. SEAL ALL SEAMS (LONGITUDINAL AND TRANSVERSE) AIR TIGHT WITH SEALANT PER SPECIFICATIONS.

2. DUCT DIMENSIONS ARE INSIDE CLEAR.

3. DIFFUSER NECK SIZE IS SAME AS FLEXIBLE DUCT SIZE.

4. UNLESS OTHERWISE NOTED, ALL CHANGES IN DIRECTION SHALL BE MADE WITH RADIUS ELBOWS WITH RADIUS TO CENTERLINE EQUAL TO 1.5 DUCT WIDTH.

5. WHERE REQUIRED FOR SPACE CONSTRAINTS, PROVIDE MITERED ELBOWS WITH TURNING VANES AS FOLLOWS:

   A. FOR DUCT WIDTHS OF 36" OR LESS, PROVIDE MANUFACTURED SINGLE WIDTH TURNING VANES, WITH NO TRAILING EDGES AND SPACING IN ACCORDANCE WITH SMACNA DUCT CONSTRUCTION STANDARDS FOR "STANDARD SPACING".

   B. USE DOUBLE THICKNESS (AIRFOIL) BLADES WITHOUT TRAILING EDGES FOR DUCT WIDTHS GREATER THAN 36".

6. ALL FLEXIBLE DUCTS SHALL NOT BE LESS THAN 4', OR MORE THAN 10' IN LENGTH. INSTALL FLEXIBLE DUCTWORK SUCH THAT:

   A. MINIMUM OVERALL LENGTH OF 3D, STRAIGHT INTO NECK OF DIFFUSER.

   B. MAXIMUM OF 135° OF TOTAL TURNING IN ENTIRE LENGTH OF FLEXIBLE DUCT.

   C. MINIMUM TURNING RADIUS OF R = 1.5D.

   D. WHERE:
   * D = FLEXIBLE DUCT DIAMETER
   * R = RADIUS OF TURN AS MEASURED TO CENTERLINE OF DUCT.

7. RETURN AIR PLENUM: THE HVAC SYSTEM WILL USE THE SPACE ABOVE THE CEILING AS A RETURN AIR PLENUM. CONTRACTOR SHALL CONFORM TO THE REQUIREMENTS OF NFPA AND LOCAL CODE REQUIREMENTS FOR ALL MATERIAL INSTALLED IN THE RETURN AIR PLENUM.

   A. IN ADDITION, THE CONTRACTOR SHALL PROVIDE A COMPLETE RETURN AIR PATH BETWEEN ALL RETURN AIR DEVICES (GRILLES ETC.) AND THEIR RESPECTIVE HVAC UNIT. MAXIMUM VELOCITY OF RETURN AIR IN PLENUM SHALL GENERALLY NOT EXCEED 250 FEET PER MINUTE, NOR EXCEED 750 FEET PER MINUTE AT ANY CROSS-SECTION OF THE RETURN AIR PATH.

8. BRANCH LINES:

   A. MAKE ALL TAPS TO ROUND DUCTWORK WITH CONICAL TEES.

   B. MAKE ALL TAPS TO RECTANGLE DUCTWORK WITH 45° ENTRY OR CONICAL SPIN IN TO ROUND.

   C. INCLUDE DAMPERS AT ALL BRANCH LINES.

9. DUCT SIZES NOT CALLED OUT SHALL BE DETERMINED BASED ON 0.08" S.P. LOSS OR LESS PER 100 FT. OF LENGTH.

10. ASSUME ROUND OR OVAL DUCTS IN EXPOSED AREAS.

11. INCLUDE DAMPERS AT ALL BRANCH LINES, WHERE SHOWN ON THE DRAWINGS, AND WHERE OTHERWISE REQUIRED FOR BALANCING.

PIPE INSTALLATION:

1. ALL PIPING SHALL BE ADEQUATELY SUPPORTED FROM THE BUILDING STRUCTURE TO PREVENT SAGGING, POCKETING, SWAYING OR DISPLACEMENT BY MEANS OF HANGERS AND SUPPORTS. PIPING IS NOT TO BE SUPPORTED BY EQUIPMENT.

2. PROVIDE DIELECTRIC UNIONS BETWEEN DISSIMILAR MATERIALS.

3. PROVIDE MANUAL AIR VENTS AND CAPPED HOSE-END DRAINS WITH ISOLATION VALVES AT PIPING HIGH AND LOW POINTS.

4. WELD PIPE IN ACCORDANCE WITH APPLICABLE CODES AND STANDARDS. WELDERS SHALL BE CERTIFIED FOR TYPE OF WORK BEING PERFORMED.

5. FLUSH OUT PIPING AND REMOVE CONTROL DEVICES BEFORE PERFORMING PRESSURE TEST. DO NOT USE PIPING SYSTEM VALVES TO ISOLATE SECTIONS WHERE TEST PRESSURE EXCEEDS VALVE PRESSURE RATING. PRESSURIZE PIPING AT 100 PSIG. IF LEAKAGE IS OBSERVED OR IF TEMPERATURE COMPENSATED PRESSURE DROP EXCEEDS 1% OF TEST PRESSURE, REPAIR LEAKS AND RETEST. DO NOT USE AIR PRESSURE TO TEST PLASTIC PIPE.

6. PROVIDE SUPPORT UNDER ELBOWS ON PUMP SUCTION AND DISCHARGE LINES.

7. ALL STRAINERS SHALL BE FURNISHED WITH A "ROUGHING" SCREEN AND TWO (2) SCREENS FOR NORMAL OPERATION. INSTALL STRAINER WITH ROUGHING SCREEN AND OPERATE SYSTEM FOR 24 HOURS MINIMUM (RUN DOMESTIC WATER SYSTEMS AT MAX FLOW FOR A MINIMUM OF ONE HALF (1/2) HOUR. REMOVE ROUGHING SCREEN AND INSTALL NORMAL SCREEN, AFTER TWO WEEKS OF NORMAL OPERATION INSTALL NEW NORMAL SCREEN.

8. PIPING SIZES SHALL BE BASED ON 2' OR LESS HEAD LOSS PER 100 FEET OF LENGTH. VELOCITIES SHALL NOT EXCEED 10 FEET PER SECOND.

9. INSTALL ALL PIPING TO ALLOW FOR EXPANSION AND CONTRACTION WITHIN THE PIPING SYSTEM. ENSURE ALL REQUIRED PIPE EXPANSION WILL OCCUR IN THE PROPER DIRECTION AND SEGMENT OF PIPE. PROPERLY ANCHOR (RE: SPECIFICATIONS) ALL PIPING REQUIRING EXPANSION/CONTRACTION ISOLATION. COORDINATE PIPE EXPANSION/CONTRACTION TO PREVENT DAMAGE TO ANY AND ALL BUILDING COMPONENTS.

10. PROVIDE ISOLATION VALVES AT EVERY HYDRONIC BRANCH LINE.

CONDENSATE DRAINAGE:

1. PROVIDE CONDENSATE DRAINAGE FOR ALL COOLING COILS AND OVERFLOW PANS.

2. ROUTE CONDENSATE PIPING, FULL SIZE OF DRIP PAN CONNECTION, TO NEAREST CODE APPROVED RECEPTACLE. INSULATE WHERE LOCATED ABOVE FINISHED CEILINGS.

3. HEAT TRACE CONDENSATE LINES FROM FOOD SERVICE EQUIPMENT.

LOUVERS:

1. ALL LOUVERS LOCATED ON EXTERIOR WALLS SHALL BE PROVIDED BY ARCHITECTURAL DIVISION. ALL OTHER LOUVERS SHALL BE PROVIDED BY DIVISION 23. REQUIRED LOUVER FREE AREAS ARE INDICATED ON DIVISION 23 AND 23 DRAWINGS. IT IS THE RESPONSIBILITY OF THIS CONTRACTOR TO CONFIRM THAT THE REQUIRED FREE AREA HAS BEEN PROVIDED, PRIOR TO CONNECTION TO THAT LOUVER. DIVISION 23 SHALL PROVIDE ALL LOUVER PLENUMS.

CUTTING, PATCHING AND DEMOLITION:

1. KEEP DEMOLITION & CUTTING TO MINIMUM REQUIRED FOR PROPER EXECUTION OF WORK.

2. BE RESPONSIBLE FOR ALL CUTTING AND PATCHING NECESSARY FOR THE COMPLETION OF THE WORK.

3. NO CUTTING (NOT SHOWN ON THE CONTRACT DOCUMENTS) SHALL BE DONE WITHOUT THE APPROVAL OF THE ARCHITECT AS TO LOCATIONS, METHOD AND EXTENT OF THE CUTTING.

4. REPAIR ALL ACCIDENTAL OR INTENTIONAL DAMAGE TO MATCH EXISTING CONSTRUCTION WITH NO NOTICEABLE DIFFERENCE IN CONTINUITY, APPEARANCE OR FUNCTION.

5. ALL "CAPPED" SANITARY AND VENT LINES SHALL BE RECONNECTED OR RE-ROUTED AS NECESSARY TO PREVENT "DEAD-ENDS" IN THE PIPING. ALL PIPING SHALL DRAIN TO ACTIVE SANITARY WASTE LINES AND ALL BRANCHES WITH TRAPS SHALL BE ADEQUATELY VENTED.

GENERAL PLUMBING CONTRACT REQUIREMENTS:

1. THE GENERAL MECHANICAL REQUIREMENTS PERTAIN TO THE WORK OF THIS DIVISION.

2. PREPARE SHOP DRAWINGS OF ALL NEW WORK (INCLUDING SLEEVE LOCATIONS) TO VERIFY LOCATIONS AND COORDINATION OF WORK BETWEEN TRADES PRIOR TO INSTALLATION.

3. ALL DRAIN GRATES, CLEANOUT COVERS, AND OTHER FINISHED, EXPOSED COMPONENTS SHALL BE PROTECTED FROM DAMAGE. DAMAGED COMPONENTS SHALL BE REPLACED BY CONTRACTOR AT NO ADDITIONAL COST TO THE CONTRACT.

4. COORDINATE ROUTING OF ALL PLUMBING PIPING BELOW SLAB WITH STRUCTURAL GRADE BEAMS, TIE BEAMS, ETC. ALLOW FOR REROUTING OF PIPING AS REQUIRED.

5. ALL REQUIRED OPENINGS IN CONCRETE BEAMS AND STRUCTURAL WALLS ARE TO BE ACCOMPLISHED USING SLEEVES PROPERLY SIZED FOR THE PIPE THEY SERVE. CORE DRILLING IN BEAMS IS NOT ALLOWED. CORE DRILLING IN PANS IS ALLOWED UPON PRIOR APPROVAL OF ARCHITECT AND STRUCTURAL ENGINEER.

6. HORIZONTAL STORM AND SANITARY PIPING SHALL RUN AT A SLOPE OF 1/4" PER FOOT MINIMUM FOR 3" AND SMALLER PIPING. 4" AND LARGER PIPING SHALL RUN AT 1/8" PER FOOT MINIMUM.

7. NO DOMESTIC WATER LINES SHALL BE LOCATED EXPOSED IN FINISHED SPACES OR BELOW THE BUILDING SLAB UNLESS SHOWN OTHERWISE ON THE DRAWINGS.

8. WHERE SHOWN, MINIMIZE THE NUMBER OF JOINTS ON ANY PRESSURIZED PIPING BELOW CONCRETE SLABS. ALL BELOW GRADE PIPING TO BE PRESSURE TESTED AND WITNESSED BY ARCHITECT BEFORE BACKFILLING.

9. ALL CLEANOUTS FOR HORIZONTAL STORM DRAINAGE SYSTEM SHALL BE PIPE SIZE OR MAXIMUM 6" FOR LARGER PIPE.

10. IN ADDITION TO THE CLEANOUT LOCATIONS SHOWN ON DRAWINGS, PROVIDE ADDITIONAL CLEANOUTS AT:

   A. ALL UPPER TERMINALS.

   B. EACH RUN OF PIPING WHICH IS MORE THAN 100 FEET IN LENGTH OR FRACTION THEREOF.

   C. HORIZONTAL LINES 5 FEET OR MORE.

   D. HORIZONTAL LINES FOR EACH AGGREGATE CHANGE OF DIRECTION EXCEEDING 135 DEGREES.

   E. AT THE BASE OF ALL WASTE AND VENT RISERS. ALL VERTICAL CLEANOUTS SHALL BE SIZED TO ACCOMMODATE THE LARGEST PIPE ON THAT BRANCH LINE, BUT NEVER LARGER THAN 4".

11. NO GAS LINES SHALL BE LOCATED BELOW BUILDING SLAB. ALL GAS PIPING IN AIR PLENUMS TO BE WELDED.

12. PROVIDE ISOLATION VALVES ON ALL PIPING SERVING HOSE BIBBS.

13. ANY ELECTRICAL SPACE NOT CONSTRUCTED WITH A SUB-ROOF WHICH MAY HAVE PLUMBING PIPING AT THE CEILING OF THESE SPACES SHALL HAVE A DRIP PAN INSTALLED BELOW THE PIPING. DRIP PANS SHALL BE 1.5 TIMES THE WIDTH OF THE PIPING SERVED WITH A MINIMUM OF 2" HIGH SIDES. DRIP PANS SHALL BE SUSPENDED FROM THE PIPING SERVED AND SHALL SLOPE AT A MINIMUM 1/8"/FT. DRIP PANS SHALL DISCHARGE WITH MIN. 1-1/2" DR TO FLOOR DRAINS.

   A. DO NOT LOCATE PIPING DIRECTLY ABOVE ANY ELECTRICAL EQUIPMENT IN ELECTRICAL ROOMS.

14. MAINTAIN DESIGNATED PLUMBING FIXTURE HEADER SIZE FOR FULL BANK OF FIXTURES.

15. PROVIDE GAS VENTS EXTENDING CONTINUOUSLY FROM ALL INTERIOR GAS REGULATORS TO THE EXTERIOR OF THE BUILDING. TERMINATE AT AN APPROVED LOCATION. SIZE VENTS SUCH THAT MINIMUM VENT SIZE (FOR VENT WHICH IS 10 FEET OR LESS IN LENGTH) EQUALS RELIEF OUTLET PIPE SIZE. INCREASE VENT PIPE SIZE ONE PIPE SIZE FOR EVERY ADDITIONAL TEN FEET OF VENT PIPE LENGTH.

   A. PROVIDE AN ISOLATION VALVE DOWNSTREAM OF EVERY INTERIOR GAS REGULATOR.

16. PROVIDE HEAT TRACE FOR ALL PIPING EXPOSED TO WEATHER INCLUDING BUT NOT LIMITED TO:

   A. STORM DRAIN BODIES.

   B. HORIZONTAL STORM LINES ABOVE GROUND AND EXTERIOR TO THE BUILDING.

   C. SANITARY TRAPS ABOVE GROUND AND EXTERIOR TO THE BUILDING.

   D. DOMESTIC WATER LINES ABOVE GROUND AND EXTERIOR TO THE BUILDING.

   E. ELSEWHERE AS INDICATED ON THE DRAWINGS OR SPECIFICATIONS.

SEISMIC RESTRAINTS:

1. LOCATE, SELECT, DESIGN AND INSTALL SEISMIC RESTRAINTS FOR ALL MECHANICAL SYSTEMS. INCLUDE RESTRAINTS FOR DUCTWORK, PIPING AND EQUIPMENT.

2. COMPLY WITH THE REQUIREMENTS OF THE "GUIDELINES FOR SEISMIC RESTRAINTS OF MECHANICAL SYSTEMS AND PLUMBING PIPING SYSTEMS", CURRENT EDITION, PUBLISHED JOINTLY BY THE SHEET METAL INDUSTRY FUND OF LOS ANGELES, CALIFORNIA AND THE PLUMBING AND PIPING INDUSTRY COUNCIL INC., LOS ANGELES, CALIFORNIA.

3. REFER TO STRUCTURAL PLANS FOR SEISMIC LOAD DESIGN CRITERIA.

STRUCTURE:

1. DO NOT PENETRATE STRUCTURAL MEMBERS. ALL EQUIPMENT SUPPORTS SHALL BE ATTACHED TO THE LOAD BEARING MEMBERS OF STRUCTURAL ELEMENTS. DO NOT OVER-STRESS ANY STRUCTURAL MEMBERS. CONTACT STRUCTURAL ENGINEER FOR ALLOWABLE LOADS FOR SPECIFIC MEMBERS.

2. DO NOT UTILIZE POWER DRIVEN ANCHORS FOR ANY LOCATIONS WHICH REQUIRE THE LOAD TO BE HELD IN TENSION. SEE STRUCTURAL DIVISION FOR ADDITIONAL RESTRICTIONS.

3. SEE ALSO STRUCTURAL DIVISION FOR ACCEPTABLE ANCHORING AND SUPPORT MEANS, METHODS, AND LOCATIONS.

4. PROVIDE FLEXIBLE CONNECTORS, EXPANSION LOOPS, EXPANSION JOINTS, ADDITIONAL FITTINGS OR EQUIVALENT TO ACCOMMODATE THE THERMAL EXPANSION OF THE BUILDING THROUGH STRUCTURAL EXPANSION JOINTS. PROVIDE SUCH FITTING AT EVERY PIPE, DUCT, CONDUIT, ETC. CROSSING OF A STRUCTURAL EXPANSION JOINT.

CONSTRUCTION VENTILATION:

1. WHERE EXISTING OR NEW MECHANICAL SYSTEMS ARE USED FOR TEMPORARY VENTILATION OR CLIMATE CONTROL, MECHANICAL EQUIPMENT INSTALLER SHALL PROVIDE CONSTRUCTION FILTERS, MAINTAIN EQUIPMENT, AND CLEAN, ADJUST AND PUT IN NEW CONDITION BEFORE BUILDING OCCUPANCY. PARTS AND LABOR WARRANTY SHALL NOT BE CONSIDERED TO START UNTIL ACCEPTANCE OF SYSTEM BY OWNER.

2. PROVIDE CONSTRUCTION FILTERS INSTALLED AT ALL AIR MOVING DEVICES THROUGHOUT THE CONSTRUCTION. REMOVE FILTERS ONLY FOR BALANCING AND FINAL TURNOVER. INSPECT ALL NON-CONSTRUCTION FILTERS AND REPLACE ALL THOSE DEEMED NECESSARY BY THE ENGINEER PRIOR TO ACCEPTANCE OF THE SYSTEM BY THE OWNER.

GAS FIRED VENTING REQUIREMENTS:

1. ALL FLUES SERVING GAS FIRED EQUIPMENT SHALL BE DOUBLE WALL TYPE "B" BY METALBESTOS CO. OR EQUAL. TERMINATE FLUES A MINIMUM HEIGHT ABOVE ROOF (AS DETERMINED BY CODE) WITH WEATHER CAP. SLOPE HORIZONTAL RUNS TOWARD POINT OF ORIGINATION AT MINIMUM 1/4" PER 1'.

ELECTRIC HEAT FREEZE PROTECTION:

1. PIPE HEAT TRACE CABLE:

   A. HEAT TRACE CABLE SHALL BE INSTALLED BY A LICENSED ELECTRICIAN.

   B. APPLY THE HEAT TRACE CABLE ON THE PIPE AFTER PRESSURE TESTING.

      (1) DO NOT SPIRAL WRAP ON PIPE.

      (2) MAKE ONE WRAP AT VALVES.

      (3) SECURE TO PIPE WITH METHODS APPROVED BY MANUFACTURER.

   C. APPLY "ELECTRICALLY TRACED" SIGNS ON OUTSIDE OF INSULATION.

   D. TEST PER MANUFACTURER'S RECOMMENDATIONS.

   E. APPLY HEAT TRACE TO THE FOLLOWING PIPING SYSTEMS.

      (1) DOMESTIC WATER (COLD, HOT, RECIRC.) EXPOSED TO FREEZING CONDITIONS.

      (2) SANITARY TRAPS AND THE DOWNSTREAM HORIZONTAL PIPE WHERE EXPOSED TO FREEZING CONDITIONS.

      (3) STORM PIPING SUBJECT TO FREEZING CONDITIONS.

   F. ALL HEAT TRACE PIPE SHALL BE INSULATED PER SPECIFICATIONS.

   G. COORDINATE ALL HEAT TRACING AND REQUIRED CIRCUITS WITH ELECTRICAL CONTRACTOR.

FIRE PROTECTION NOTES:

1. FIRE PROTECTION NOTES

   A. SUBMIT SHOP DRAWINGS SHOWING PROPOSED LAYOUT OF FIRE PROTECTION SYSTEM. DRAWINGS SHALL SHOW ACTUAL EQUIPMENT TO BE USED, DIMENSIONS AND HYDRAULIC CALCULATIONS. SHOP DRAWINGS SHALL BE APPROVED BY THE LOCAL AUTHORITY HAVING JURISDICTION PRIOR TO SUBMITTAL TO ENGINEER OR ARCHITECT.

   B. SHOW THE CONNECTING MAIN AND BRANCH PIPE SIZES FOR ALL RELOCATED EXISTING SPRINKLER HEADS.

   C. CONFORM TO HAZARD OCCUPANCY REQUIREMENTS OF NFPA 13.

2. THE ENTIRE BUILDING SHALL BE SERVED BY A WET PIPE TYPE FIRE SPRINKLER SYSTEM. COORDINATE ELECTRICAL, FIRE PROTECTION AND MECHANICAL SPACE REQUIREMENTS CAREFULLY BEFORE PROCEEDING WITH INSTALLATION.

3. EXTEND THE EXISTING SPRINKLER SYSTEM, RELOCATE EXISTING AND ADD NEW SPRINKLER HEADS IN ACCORDANCE WITH NFPA 13, ALL APPLICABLE CODES AND ORDINANCES AND PROJECT REQUIREMENTS TO COMPLETELY PROTECT THE NEW WORK.

4. SYSTEM SHALL BE INSTALLED COMPLETE AND OPERATIONAL, INCLUDING WATER FLOW INDICATOR, CONNECTIONS TO EXISTING ALARM, DRAIN PIPING, IDENTIFICATION SIGNS, ETC.

5. WORK SHALL BE PERFORMED BY A QUALIFIED FIRE SPRINKLER INSTALLER WITH A MINIMUM OF (5) FIVE YEARS EXPERIENCE IN SIMILAR INSTALLATIONS.

6. COORDINATE ALL WORK WITH ALL OTHER TRADES.

7. SUPPLY OWNER AN EXTRA STOCK OF SIX SPRINKLER HEADS (6), THREE (3) OF EACH TYPE, AND A SPRINKLER WRENCH.

FIRE STOPPING:

1. FIRE STOPPING REQUIREMENT: PENETRATIONS THROUGH RATED WALLS AND FLOORS SHALL BE SEALED WITH A MATERIAL CAPABLE OF PREVENTING THE PASSAGE OF FLAMES AND HOT GASSES WHEN SUBJECTED TO THE REQUIREMENTS OF THE TEST STANDARD SPECIFIC FOR FIRE STOPS ASTM-E-814. ACCEPTANCE MATERIALS NCLUDE: DOW CORNING RTV FIRE STOP FOAM FOR BARE PIPE, METAL CONDUIT, AND ELECTRICAL CABLE; 3M FIRE DAM 21,22 AND 230 CAULK FOR BARE PIPE, METAL CONDUIT, AND BUILDING CONSTRUCTION; GAPS 3M FS-195 INTUMESCENT STRIPS FOR INSULATED PIPES, PLASTIC PIPE OR CONDUIT, AND ELECTRICAL CABLE.

BRINKLEY SARGENT WIGINTON ARCHITECTS

Architect: Brinkley Sargent Wiginton Architects (972) 960-9970
Landscape: Kendall Landscape Architecture (214) 739-3226
Structural: L.A. Fuess Partners, Inc (214) 593-1118
MEP: M-E Engineers (214) 741-1589
Civil: KSA Engineers, Inc (903) 236-7700
Technology: M-E Engineers (303) 421-6656

LONGVIEW POLICE DEPARTMENT

518 W. SOUTH ST. LONGVIEW, TEXAS 75601

History		
#	Date	Description

STATE OF TEXAS
LAUREN F. BERRY
117369
LICENSED
PROFESSIONAL ENGINEER
ME Engineers, Inc.
F-10231
08/19/2020

MECHANICAL GENERAL NOTES

BID ISSUE

20513
08/19/2020
M002

8/14/2020 11:03:46 AM
C:\Revit Projects\2019\LPD_CENTRAL_M19_christopher.hallPZCUX.rvt

© 2020 Brinkley Sargent Wigginton Architects, Inc.

COMPUTER ROOM AIR CONDITIONER SCHEDULE (DX / AIR COOLED)

CODE (CRAC)	MANUFACTURER/ MODEL NO.	AREA SERVED	INDOOR UNIT: FAN CFM	FAN HP	COOLING COIL (DX) TOTAL MBH	COOLING COIL (DX) TOTAL KW	REHEAT COIL (ELECT) TOTAL MBH	REHEAT COIL (ELECT) TOTAL KW	ELECTRICAL VOLT	PH	FLA	MOCP	DISC	FUSE	WIRING	E-POWER TIER	DIMENSIONS (IN.) L	W	H	WEIGHT (LBS.)	OUTDOOR UNIT (AIR COOLED): MANUFACTURER/ MODEL NO.	CODE (CCU)	ELECTRICAL VOLT	PH	FLA	MOCP	DISC	FUSE	WIRING	E-POWER? (Y/N)	DIMENSIONS (IN.) L	W	H	WEIGHT (LBS.)	REMARKS
1-01	LIEBERT PDX029	SERVER ROOM	4200	4.2	96	28	40.9	12	480	3	34.8	50	60A/3P	LPS-RK-50SPI	(3#6,#10G) 1"C	1	34 3/8	34 1/2	77 1/2	700	LIEBERT	1-01	480	3	2.8	15	30A/3P	LPS-RK-15SPI	(3#12,12G) 3/4"C	Y	55 1/2	68	43 5/8	344	
1-02	LIEBERT PDX029	SERVER ROOM	4200	4.2	96	28	40.9	12	480	3	34.8	50	60A/3P	LPS-RK-50SPI	(3#6,#10G) 1"C	1	34 3/8	34 1/2	77 1/2	700	LIEBERT	1-02	480	3	2.8	15	30A/3P	LPS-RK-15SPI	(3#12,12G) 3/4"C	Y	55 1/2	68	43 5/8	344	
1-03	LIEBERT PDX029	SERVER ROOM	4200	4.2	96	28	40.9	12	480	3	34.8	50	60A/3P	LPS-RK-50SPI	(3#6,#10G) 1"C	1	34 3/8	34 1/2	77 1/2	700	LIEBERT	1-03	480	3	2.8	15	30A/3P	LPS-RK-15SPI	(3#12,12G) 3/4"C	Y	55 1/2	68	43 5/8	344	

GENERAL NOTES
1. PROVIDE UNIT AIR FILTER BOX AND (2) FILTERS.
2. PROVIDE WITH MANUFACTURER'S CONDENSATE PUMP.
3. PROVIDE ELECTRONIC CONTROLS.
4. PROVIDE BMS INTERFACE FOR CONTROLS.
5. PROVIDE HIGH AMBIENT CONDENSING UNITS FOR 105 DEG. AMBIENT TEMP.
6. REFER TO ELECTRICAL SHEETS FOR EMERGENCY TIER DETAILS
7. CONFIGURATION: UPLOW WITH FRONT RETURN, EC FAN, DIGITAL SCROLL COMPRESSOR WITH SOUND JACKET AND XXX VALVE, ELECTRIC REHEAT WITH SCR CONTROL, MERV 8 FILTER.

DESTRATIFICATION FAN SCHEDULE

CODE (DSF)	MANUFACTURER & MODEL NO.	SERVICE	AIRFOILS	DIAMETER	DRIVE	ELECTRICAL HP/W	VOLT	PH	FLA	DISC.	FUSE	FEEDER	MTG	CTRL	WEIGHT (LBS)	E-POWER TIER	REMARKS
2-01	BIG ASS FAN HIAKU	FITNESS ROOM	5	52"	D	35W	120	1	0.29	NEMA 5-20R	-	(2#12,#12G) 3/4"C	2	I	18	3	A, B, C
2-02	BIG ASS FAN HIAKU	FITNESS ROOM	5	52"	D	35W	120	1	0.29	NEMA 5-20R	-	(2#12,#12G) 3/4"C	2	I	18	3	A, B, C

GENERAL NOTES
1 PROVIDE STANDARD AVAILABLE COLOR, TO BE SELECTED BY ARCHITECT.
2 GROUP ALL FANS IN SAME ROOM TOGETHER ON SINGLE CONTROLLER.
3 FANS TO BE INTERLOCKED WITH FIRE ALARM.
4 REFER TO ELECTRICAL SHEETS FOR EMERGENCY TIER DETAILS

MOUNTING (MTG)
1 COORDINATE SUPPORT FOR LAY-IN CEILING MOUNTING APPLICATION.
2 PROVIDE MANUFACTURER FAN MOUNT AND EXTENSION TUBE SUPPORTED FROM STRUCTURE ABOVE. CONTRACTOR TO COORDINATE STRUT OR GUY CABLES (TO PREVENT LATERAL MOVEMENT) WITH STRUCTURAL .

CONTROL (CTRL)
I CONTROL VIA FACTORY PROVIDED COMPACT WALL SWITCH WITH ABILITY TO ADJUST FAN SPEED.
II EACH FAN SHALL BE PROVIDED WITH ITS OWN CONTROLLER, UON.

REMARKS:
A. PROVIDE STAINLESS STEEL HOUSING WITH DARK BRONZE BLADES.
B. PROVIDE WITH LIGHT KIT.
C. PROVIDE LOW PROFILE TUBE LENGTH FOR DESTRATIFICATION FAN.

ENVIRONMENTAL FAN SCHEDULE

CODE	MANUFACTURER/ MODEL NO.	SERVICE	LOCATION	TYPE	CFM	ESP "W.C. (ALT.)	DRIVE	ELECTRICAL HP (W)	VOLT	PH	FLA	DISC.	FUSE	FEEDER	E-POWER (Y/N)	MTG	CTRL	SPEED CONTROL VFD/FSC/EC	DIMENSIONS L (IN.)	W (IN.)	H (IN.)	WEIGHT (LBS.)	E-POWER TIER	REMARKS
EF																								
1-01	COOK/100SQN17DEC	CRAWL SPACE VENTILATION	MECH ROOM	INLINE	500	0.5	D	1/4	120	1	5.8	$TO	-	(2#12,#12G) 3/4"C	Y	1	II	EC	22	14	16	57	3	
1-02	COOK/100SQN17DEC	VEHICULAR PROCESSING	ROOM	INLINE	700	0.5	D	1/4	120	1	5.8	$TO	-	(2#12,#12G) 3/4"C	Y	1	III	EC	22	14	16	57	3	
2-01	COOK/101R17DEC	VEHICLE MAINT BAY	ROOF	UPBLAST	550	0.5	D	1/4	120	1	5.8	$TO	-	(2#12,#12G) 3/4"C	Y	2	III	EC	25	25	21	23	3	
2-02	COOK/210RH10B	DRUG/EVIDENCE/GENERAL EXHAUST	ROOF	UPBLAST	4750	1.5	B	3	480	3	4.8	30A/3P	LPS-RK-15SPI	(2#12,#12G) 3/4"C	Y	2	IV	VFD	46	46	36	204	3	
2-03	COOK/101R17D	SWAT VEHICLE EXHAUST	ROOF	UPBLAST	600	0.5	D	1/8	120	1	3.4	$TO	-	(2#12,#12G) 3/4"C	Y	2	III	EC	25	25	21	24	1	
2-04	COOK/180RX5B	LAB EXHAUST	ROOF	UPBLAST	1150	1.0	B	1/2	208	3	2.2	30A/3P	LPS-RK-15SPI	(3#12,#12G) 3/4"C	Y	2	I	VFD	40	40	32	91	2	
3-01	COOK/180R17D	LOCKER/TOILET/SHOWER/BREAK ROOM	ROOF	UPBLAST	5000	1.5	D	3	480	3	4.8	30A/3P	LPS-RK-15SPI	(3#12,#12G) 3/4"C	Y	2	I	VFD	40	40	36	122	2	
4-01	COOK/210RX17D	WEST TOILET/GENERAL EXHAUST	ROOF	UPBLAST	2650	2.0	D	2	480	3	3.4	30A/3P	LPS-RK-15SPI	(3#12,#12G) 3/4"C	Y	2	I	VFD	46	46	33	126	2	

GENERAL NOTES:
1. DRIVE TYPE: B = BELT-PROVIDE ADJUSTABLE SHEAVE UNLESS OTHERWISE NOTED. D=DIRECT DRIVE.
2. ALL CURBS SHALL BE FACTORY MADE, 18 INCH HIGH INSULATED UNLESS OTHERWISE NOTED.
3. PROVIDE MAGNETIC STARTER WITH AUXILIARY CONTACTS AND HOA SWITCH ON ALL THREE PHASE UNITS EXCEPT WHEN SERVED FROM MOTOR CONTROL CENTER.
4. PROVIDE SOLID STATE SPEED CONTROLLER FOR ALL DIRECT DRIVE FANS. INSTALL ABOVE CEILING OR ADJACENT TO FAN.
5. REFER TO ELECTRICAL SHEETS FOR EMERGENCY TIER DETAILS

MOUNTING (MTG):
1. INSTALL FAN WITH FLEXIBLE CONNECTIONS AT DUCT INLET AND OUTLET AND WITH HANGING VIBRATION ISOLATORS.
2. ROOF MOUNTED FAN. PROVIDE 14" CURB WITH INTEGRAL BACK DRAFTED DAMPER.

CONTROL (CTRL):
I. CONTROL VIA BMS. ENERGIZE VIA SCHEDULE THROUGH BMS SYSTEM.
II. CONTROL VIA BMS. ENERGIZE BASED ON HUMIDITY SENDOR.
III. CONTROL VIA BMS. FAN SHALL ENERGIZE BASED ON CO AND NO SENSOR.
IV. CONTROL VIA BMS. FAN SHALL RUN CONTINUOUSLY.

BRINKLEY SARGENT WIGINTON ARCHITECTS
Architect: Brinkley Sargent Wigginton Architects (972) 960-9970
Landscape: Kendall Landscape Architecture (214) 739-3226
Structural: L.A. Fuess Partners, Inc (214) 593-1118
MEP: M-E Engineers (214) 741-1589
Civil: KSA Engineers, Inc (903) 236-7700
Technology: M-E Engineers (303) 421-6656

LONGVIEW POLICE DEPARTMENT

518 W. SOUTH ST. LONGVIEW, TEXAS 75601

History

#	Date	Description

STATE OF TEXAS
LAUREN F. BERRY
117369
LICENSED PROFESSIONAL ENGINEER
ME Engineers, Inc.
F-10231
08/19/2020

MECHANICAL SCHEDULES

BID ISSUE

20513
08/19/2020
M003

8/14/2020 11:03:46 AM

C:\Revit Projects\2015\JRL_CENTRAL_MPB_christopher.hoff2CJK.rvt

© 2020 Brinkley Sargent Wigginton Architects, Inc.

SOUND ATTENUATOR SCHEDULE

CODE (SA)	MANUFACTURER./ MODEL NO.	SYSTEM	CFM	FACE VELOCITY (FPM)	OCTAVE BAND Hz DYNAMIC INSERTION LOSS, dB SELF-NOISE POWER LEVELS, dB 63	125	250	500	1K	2K	4K	8K	SIZE WIDTH (IN)	HEIGHT (IN)	LENG. (IN)	MAX. PRESS. DROP ("WC)	REMARKS
1	PRICE	RTU-1 SUPPLY															C
2	PRICE	RTU-1 RETURN															C
3	PRICE	RTU-2 SUPPLY															C
4	PRICE	RTU-2 RETURN															C
5	PRICE	RTU-3 SUPPLY															C
6	PRICE	RTU-3 RETURN															C

GENERAL NOTES
1. SILENCERS ARE SCHEDULED BASED ON SCHEDULED EQUIPMENT. CONTRACTOR SHALL PROVIDE NOISE INFORMATION FOR EACH ITEM REQUIRING AN ATTENUATOR AND SHALL BE RESPONSIBLE FOR MAKING REVISIONS TO SILENCERS IF ALTERNATE EQUIPMENT IS INSTALLED.

REMARK NOTES
A. PACKLESS, NON-EROSIVE ATTENUATOR.
B. STAINLESS STEEL, PACKLESS, NON-EROSIVE ATTENUATOR.
C. ELBOW TYPE SOUND ATTENUATOR.

DUCT HEATER SCHEDULE (ELECTRIC)

CODE (UH)	MANUFACTURER/ MODEL NO.	SERVICE	DUCT SIZE (IN. X IN.)	AIRFLOW (CFM)	EAT (F)	LAT (F)	OUTPUT (KW)	ELECTRICAL VOLT	PH	FLA	DISC	FUSE	FEEDER	WEIGHT (LBS.)	E-POWER TIER	REMARKS
1-01	INDEECO	RTU-1	30X20	4800	50	60	15	480	3	18	30A/3P	LPS-RK-25SPI	(3#10,#10G) 3/4"C		1	
3-01	INDEECO	RTU-2	50X60	30000	50	60	95	480	3	115	200A/3P	LPS-RK 150SPI	(3#1/0,#6G) 1-1/2"C.		1	A,B,C
3-02	INDEECO	RTU-3	50X60	30000	50	60	95	480	3	115	200A/3P	LPS-RK 150SPI	(3#1/0,#6G) 1-1/2"C.		1	A,B,C

GENERAL NOTES
1. JOB SITE ELEVATION = 500 FT.
2. REFER TO ELECTRICAL SHEETS FOR EMERGENCY TIER DETAILS
REMARK NOTES

GRILLE REGISTER DIFFUSER SCHEDULE

CODE	MANUFACTURER/ MODEL NO.	SERVICE	TYPE	ACCESSORIES	FACE SIZE	REMARKS
A1	TITUS OMNI	SUPPLY	SQUARE PLAQUE		12 X 12, 24 X 24	A,D
A2	TITUS FL-10 HT	SUPPLY	SLOT	LINED PLENUM	SEE DRAWINGS	B,C,H
A3	TITUS 271 FL	SUPPLY	SIDEWALL		SEE DRAWINGS	
A4	TITUS CT-540	SUPPLY	FLOOR		SEE DRAWINGS	G
B1	TITUS 45F	RETURN	SIGHT PROOF		12x12,12x24, 24x24,24x48	D
B2	TITUS 3 FL	RETURN	LOUVERED	ALUMINUM	SEE DRAWINGS	
B3	TITUS FL-10	RETURN	SLOT	LINED PLENUM	SEE DRAWINGS	B,C,H
C1	TITUS 45F	EXHAUST	SIGHT PROOF		12x12, 24x24	E,F
C2	TITUS 3 FL	EXHAUST	LOUVERED	ALUMINUM	SEE DRAWINGS	E
C3	TITUS FL-10	EXHAUST	SLOT	ALUMINUM	SEE DRAWINGS	E,H
SA	TITUS SG-PRA	SUPPLY	SECURITY		NECK+2"	I
SB	TITUS SG-PRA	RETURN/EXHAUST	SECURITY		NECK+2"	I

GENERAL NOTES
1. SEE PLANS FOR CFM AND NECK SIZE.
2. MAXIMUM NOISE CRITERIA (NC) SHALL BE 25 UNLESS OTHERWISE NOTED.
3. COLOR TO BE COORDINATED WITH ARCHITECT.
4. MATERIAL IS STEEL UNLESS OTHERWISE NOTED.
5. PROVIDE BALANCING DEVICE FOR ALL GRD'S UNLESS OTHERWISE NOTED.
6. DIFFUSERS SHALL BE 4-WAY THROW UNLESS OTHERWISE NOTED.
7. PROVIDE CABLE ACTUATOR (SUCH AS YOUNG REGULATOR) AT ALL LOCATIONS WHERE BALANCING DEVICE IS INACCESSIBLE.
8. OPPOSED BLADE DAMPERS AT GRD'S ARE NOT PERMITTED. PROVIDE MANUAL VOLUME DAMPERS FOR ALL DEVICES.
9. PROVIDE INSULATED BACK PLATES ON DIFFUSERS.
10. FINISH/COLOR BY THE ARCHITECT.

REMARK NOTES
A. GRILLES WITH 100 CFM OR LESS AND INSTALLED IN GYP CEILING, MAY HAVE 12 X 12 OR 24 X 24 FACE. ALL OTHERS SHALL BE 24 X 24 FACE.
B. SLOT DIFFUSERS SHALL BE CONTINUOUS IN APPEARANCE WHERE MULTIPLE CONNECTIONS ARE REQUIRED. PROVIDE CORNERS AND BLANKOFFS WHERE NEEDED.
C. WHERE SLOT DIFFUSERS ARE SHOWN WALL TO WALL, CONTRACTOR SHALL VERIFY EXACT LENGTHS AND FIELD CUT AS REQUIRED.
D. CFM RANGE/NECK SIZE 0-130/6"; 131-210/8"; 211-325/10"; 326-500/12"; 501-700/14".
E. GRILLE TO BE ALUMINUM.
F. ALUMINUM BARS AND ALUMINUM SLEEVE. COORDINATE SLEEVE LENGTH NEEDED.
G. PROVIDE WITH HEAVY DUTY MOUNTING FRAME FOR FLOOR APPLICATION EQUAL TO TITUS FRAME TYPE 5.
H. PROVIDE EXTENDED PLENUM FOR LINEAR SLOT DIFFUSERS AS REQUIRED BY CEILING / SOFFIT CONSTRUCTION. REFER TO ARCH DRAWINGS.
I. CFM RANGE/NECK SIZE 0-100/6"X6", 101-200/8"X8", 201-300/12"X12", 301-500/16"X16".

A1

B1/C1

B2/C2

A2/A4/B3/C3

A3

SA/SB

PACKAGED ROOF TOP UNIT SCHEDULE

CODE RTU	MANUFACTURER/ MODEL	SYSTEM TYPE	AREA SERVED	SUPPLY FAN CFM	ESP (IN.)	CONTROL	QTY	HP	EXHAUST FAN CFM	ESP (IN.)	CONTROL	QTY	HP	MIN. OSA CFM	DCV MIN. OSA CFM	COOLING CAP. (DX) EAT (F) DB	WB	COIL LAT	UNIT LAT	TOTAL MBH	TOTAL TONS	SENS MBH	EER	ELECTRIC HEAT DESIGN CFM	EAT (F)	LAT (F)	CAP MBH	CAP KW	ELECTRICAL V	PH	MCA	MOCP	DISC. SWITCH	FUSE SIZE	FEEDER	E-POWER TIER	REMARKS
1	TRANE VOYAGER	MULTIZONE VAV	DISPATCH	4,800	1.5	VFD	1	5	-	-	-	-	-	1,000		80	66	52/52	55/54	217	18	131	11.8	-	-	-	-	-	480	3	41	50	60A/3P	LPS-RK 50SPI	(3#6,#10G.) 1"C.	1	1
2	TRANE INTELLIPAK	MULTIZONE VAV	LEVEL 1 / PARTIAL LEVEL 2	30,000	2.0	VFD	2	15	20,000	1.0	VFD	1	15	10,000		83	67	52/52	55/54	1,357	113	922	14.3	-	-	-	-	-	480	3	268	300	400A/3P	LPS-RK 300SPI	(3#350. #4G.) 3"C.	1	
3	TRANE INTELLIPAK	MULTIZONE VAV	PARTIAL LEVEL 2 / LEVEL 3	30,000	2.0	VFD	2	15	20,000	1.0	VFD	1	15	10,000		83	67	52/52	55/54	1,357	113	922	14.3	-	-	-	-	-	480	3	268	300	400A/3P	LPS-RK 300SPI	(3#350. #4G.) 3"C.	1	

GENERAL NOTES
1. PROVIDE PREMIUM EFFICIENCY MOTORS FOR MOTORS 1 HP AND OVER PER NEMA STANDARD MG1, LATEST EDITION.
2. PROVIDE MERV 7 PRE-FILTERS.
3. JOBSITE ELEVATION= 500 FT.
4. RTU'S SHALL BE PROVIDED WITH SERVICE RECEPTACLE AND SHALL HAVE SINGLE POINT POWER CONNECTION.
5. MCA LISTED IS TOTAL FOR UNIT. COORDINATE WITH ELECTRICAL.
6. PROVIDE DUCT SMOKE DETECTORS IN THE SUPPLY AND RETURN AIR OF ALL UNITS 2000 CFM OR GREATER.
7. PROVIDE MANUFACTURERS RECOMMENDED SERVICE CLEARANCE AROUND ENTIRE UNIT.
8. PROVIDE INTAKE HOOD AND 100% OSA ECONOMIZER FOR ALL RTU'S.
9. CAPACITY BASED ON 100°F AMBIENT TEMPERATURE.
10. POWER EXHAUST, UNLESS NOTED OTHERWISE.
11. PROVIDE CRANK CASE HEATER.
12. UNIT LAT = LEAVING AIR TEMPERATURE FROM UNIT AFTER HEAT GAIN FROM FAN.
13. UNITS TO BE INSTALLED ON 18" TALL SPRING ISOLATED CURBS. FILL ALL VOID SPACES OF THE CURB WITH RIGID HIGH DENSITY FIBERGLASS INSULATION.
14. REFER BACK TO ELECTRICAL ONE LINE DIAGRAM FOR CALCULATED FAULT CURRENT AT UNITS TO PROVIDE ADQUATE PROTECTION FOR THE UNITS.
15. PROVIDE MODULATING HOT GAS REHEAT.
16. PROVIDE MODULATING STAINLESS STEEL GAS HEAT SECTION.
17. PROVIDE VARIABLE SPEED COMPRESSORS.
18. REFER TO ELECTRICAL SHEETS FOR EMERGENCY TIER DETAILS

REMARK NOTES:
1. PROVIDE UNIT WITH BAROMETRIC RELIEF LOUVER.

CODE	DIMENSIONS LENGTH (IN)	WIDTH (IN)	HEIGHT (IN)	WEIGHT (LBS)
RTU-1	121.7	84.8	66.3	2,400
RTU-2	423.8	140.4	81.4	16,000
RTU-3	423.8	140.4	81.4	16,000

BRINKLEY SARGENT WIGINTON ARCHITECTS

Architect: Brinkley Sargent Wigginton Architects (972) 960-9970
Landscape: Kendall Landscape Architecture (214) 739-3226
Structural: L.A. Fuess Partners, Inc (214) 593-1118
MEP: M-E Engineers (214) 741-1589
Civil: KSA Engineers, Inc (903) 236-7700
Technology: M-E Engineers (303) 421-6636

LONGVIEW POLICE DEPARTMENT

518 W. SOUTH ST. LONGVIEW, TEXAS 75601

History		
#	Date	Description

STATE OF TEXAS
LAUREN F. BERRY
117369
LICENSED PROFESSIONAL ENGINEER
ME Engineers, Inc.
F-10231
08/19/2020

MECHANICAL SCHEDULES

BID ISSUE

20513
08/19/2020
M004

8/14/2020 11:03:47 AM

C:\Revit Projects\20513\LPD_CENTRAL_M19_revitlocal_wsPZCLR.rvt

© 2020 Brinkley Sargent Wigginton Architects, Inc.

SPLIT SYSTEM AIR CONDITIONER SCHEDULE

CODE (AC)	AREA SERVED	TYPE	MANUFACTURER/ MODEL NO.	CFM	COOLING TOTAL MBH	HEATING TOTAL MBH	INDOOR UNIT ELECTRICAL MCA	VOLT	PH	DISC.	FUSE	FEEDER	AIR COOLED CONDENSER - OUTDOOR UNIT CODE (CU)	MANUFACTURER/ MODEL NO.	AMBIENT TEMP (F) DB	OUTDOOR UNIT ELECTRICAL MCA	MOP	VOLT	PH	DISC.	FUSE	FEEDER	WEIGHT (LBS.)	E-POWER TIER	REMARKS
1-01	ELECTRIC CLOSET 1308	DUCTLESS	LG LS	-	34	38	CONNECT TO OUTDOOR UNIT PER MANUFACTURER						1-01	LG LS	95	19	30	208	1	30A/2P	LPS-RK-30SPI	(2#10,#10G) 3/4"	125	3	A
1-02	IT/DATA CLOSET 1309	DUCTLESS	LG LS	-	34	38	CONNECT TO OUTDOOR UNIT PER MANUFACTURER						1-02	LG LS	95	19	30	208	1	30A/2P	LPS-RK-30SPI	(2#10,#10G) 3/4"	125	1	A
1-03	NORMAL POWER	DUCTLESS	LG LS	-	34	38	CONNECT TO OUTDOOR UNIT PER MANUFACTURER						1-03	LG LS	95	19	30	208	1	30A/2P	LPS-RK-30SPI	(2#10,#10G) 3/4"	125	3	A
1-04	MECHANICAL ROOM	DUCTLESS	LG LS	-	34	38	CONNECT TO OUTDOOR UNIT PER MANUFACTURER						1-04	LG LS	95	19	30	208	1	30A/2P	LPS-RK-30SPI	(2#10,#10G) 3/4"	125	3	A
1-05	SWAT VEHICLE	DUCTED FCU	LG LH	1000	41	42	CONNECT TO OUTDOOR UNIT PER MANUFACTURER						1-05	LG LH	95	32	40	208	1	60A/2P	LPS-RK-40SPI	(2#8,#10G) 3/4"C	200	1	A
1-06	EMERGENCY POWER ROOM	DUCTLESS	LG LS	-	34	38	CONNECT TO OUTDOOR UNIT PER MANUFACTURER						1-06	LG LS	95	19	30	208	1	30A/2P	LPS-RK-30SPI	(2#10,#10G) 3/4"	125	3	A
1-07	VEHICLE MAINT BAY	DUCTED FCU	LG LH	1000	41	42	CONNECT TO OUTDOOR UNIT PER MANUFACTURER						1-07	LG LH	95	32	40	208	1	60A/2P	LPS-RK-40SPI	(2#8,#10G) 3/4"C	200	3	A
1-08	WEST EXIT STAIR	DUCTLESS	LG LS	-	34	38	CONNECT TO OUTDOOR UNIT PER MANUFACTURER						1-08	LG LS	95	19	30	208	1	30A/2P	LPS-RK-30SPI	(2#10,#10G) 3/4"	125	3	A
1-09	EMERGENCY POWER ROOM	DUCTLESS	LG LS	-	34	38	CONNECT TO OUTDOOR UNIT PER MANUFACTURER						1-09	LG LS	95	19	30	208	1	30A/2P	LPS-RK-30SPI	(2#10,#10G) 3/4"	125	3	A
2-01	ELECTRIC CLOSET 2124	DUCTLESS	LG LS	-	34	38	CONNECT TO OUTDOOR UNIT PER MANUFACTURER						2-01	LG LS	95	19	30	208	1	30A/2P	LPS-RK-30SPI	(2#10,#10G) 3/4"	125	3	
2-02	IT/DATA CLOSET 2125	DUCTLESS	LG LS	-	34	38	CONNECT TO OUTDOOR UNIT PER MANUFACTURER						2-02	LG LS	95	19	30	208	1	30A/2P	LPS-RK-30SPI	(2#10,#10G) 3/4"	125	1	
2-03	SOUTH EXIT STAIR	DUCTED FCU	LHN248HV	850	24	27	CONNECT TO OUTDOOR UNIT PER MANUFACTURER						2-08	LUU249HV	95	20	30	208	1	30A/2P	LPS-RK-30SPI	(2#10,#10G) 3/4"	130	3	
3-01	ELECTRICAL CLOSET 3115	DUCTLESS	LG LS	-	34	38	CONNECT TO OUTDOOR UNIT PER MANUFACTURER						3-01	LG LS	95	19	30	208	1	30A/2P	LPS-RK-30SPI	(2#10,#10G) 3/4"	125	3	
3-02	IT/DATA CLOSET 3116	DUCTLESS	LG LS	-	34	38	CONNECT TO OUTDOOR UNIT PER MANUFACTURER						3-02	LG LS	95	19	30	208	1	30A/2P	LPS-RK-30SPI	(2#10,#10G) 3/4"	125	1	
3-03	WEST EXIT STAIR	DUCTLESS	LG LS	-	34	38	CONNECT TO OUTDOOR UNIT PER MANUFACTURER						3-03	LG LS	95	19	30	208	1	30A/2P	LPS-RK-30SPI	(2#10,#10G) 3/4"	125	3	
3-04	SOUT EXIT STAIR	DUCTED FCU	LHN248HV	700	24	27	CONNECT TO OUTDOOR UNIT PER MANUFACTURER						3-04	LUU249HV	95	20	30	208	1	30A/2P	LPS-RK-30SPI	(2#10,#10G) 3/4"	130	3	
3-05	FORENSIC IT	DUCTLESS	LSN090HSV5	-	9	10.9	CONNECT TO OUTDOOR UNIT PER MANUFACTURER						3-05	LSU090HSV5	95	10	15	208	1	30A/2P	LPS-RK-15SPI	(2#12,#10G) 3/4"	75	1	
4-01	PENTHOUSE	DUCTLESS	LSN090HSV5	-	9	10.9	CONNECT TO OUTDOOR UNIT PER MANUFACTURER						4-01	LSU090HSV5	95	10	15	208	1	30A/2P	LPS-RK-15SPI	(2#12,#10G) 3/4"	75	1	
4-02	ELEV. EQUIP.	DUCTLESS	LSN090HSV5	-	9	10.9	CONNECT TO OUTDOOR UNIT PER MANUFACTURER						4-02	LSU090HSV5	95	10	15	208	1	30A/2P	LPS-RK-15SPI	(2#12,#10G) 3/4"	75	1	

GENERAL NOTES
1. PROVIDE THROW AWAY FILTERS.
2. PROVIDE INTEGRAL OVERLOAD PROTECTION.
3. PROVIDE WITH MANUFACTURER'S CONDENSATE PUMP.
4. PROVIDE WITH UNIT MOUNTED DISCONNECTS.
5. PROVIDE WALL MOUNTED PROGRAMMABLE THERMOSTAT/ELECTRONIC CONTROLS.
6. PROVIDE WITH R-410A REFRIGERANT.
7. PROVIDE HAIL GUARD FOR OUTDOOR UNIT.
8. UNITS TO BE MONITORED AND ENABLED/DISABLED BY THE BAS.
9. ROUTE AND SIZE REFRIGERANT PIPING PER MANUFACTURES RECOMMENDATION. CONTRACTOR TO PROVIDE TOTAL WEIGHT OF REFRIGERANT FOR EACH SYSTEM.
10. SIZE AND ROUTE REFRIGERANT PIPING TO ASSOCIATED CONDENSING UNIT IN ACCORDANCE WITH MANUFACTURER'S RECOMMENDATIONS.
11. REFER TO ELECTRICAL SHEETS FOR EMERGENCY TIER DETAILS

REMARKS
A. PROVIDE EXTENDED PIPE SPLIT SYSTEM.
B. ALL EVAPORATORS ON THIS SYSTEM SERVED BY MULTI-ZONE CONDENSING UNIT.
C. INDOOR UNIT POWERED BY OUTDOOR UNIT. IF ALTERNATE MANUFACTURER REQUIRED ALTERNATE POWER, THE CONTRACTOR SHALL COORDINATE ALL POWER REQUIREMENTS.

RETURN BOOT SILENCERS

TAG	SIZE	MANUFACTUER/MODEL	CFM RANGE
S1	12x12	PRICE CROSSTALK SOUND BOOT XT-U	0-500
S2	24x12	PRICE CROSSTALK SOUND BOOT XT-U	501-1000
S3	24x24	PRICE CROSSTALK SOUND BOOT XT-U	1001-2000
S4	48x14	PRICE CROSSTALK SOUND BOOT XT-U	1001-2000
S5	36x12	PRICE CROSSTALK SOUND BOOT XT-U	775-1300

NOTES:
1. PROVIDE ACOUSTICAL CALCULATIONS WITH PE STAMP TO DEMONSTRATE SELECTED CROSS TALK SILENCERS MAINTAIN THE CONTINUITY OF SAME STC LEVELS SPECIFIED AS THE REST OF PARTITION WALLS.
2. PROVIDE PRESSURE DROP CALCULATIONS WITH PE STAMP TO DEMONSTRATE THE PRESSURE DROP INCLUDING SYSTEM EFFECT AS SCHEDULED DURING SUBMITTAL REVIEW.
3. PROVIDE SILENCER INTERNAL GEOMETRY FOR ENGINEER AND ACOUSTICIAN'S APPROVAL DURING SUBMITTAL REVIEW.
4. ALL SILENCERS ARE CUSTOM BUILT U SHAPE.
5. HIGH TRANSMISSION LOSS (HTL) CASING EQUIVALENT TO 14 GA TO CONTROL BREAKOUT AND BREAKIN.

UNIT HEATER SCHEDULE (ELECTRIC)

CODE (UH)	MANUFACTURER/ MODEL NO.	SERVICE	OUTPUT (KW)	ELECTRICAL VOLT	PH	FLA	DISC	FUSE	FEEDER	WEIGHT (LBS.)	E-POWER TIER	REMARKS
1-01	TRANE UHEC	SWAT VEHICLE	10	480	3	12	BY MFR.	-	(3#12, #12G.) 3/4"C.		1	A,B,C
1-02	TRANE UHEC	VEHICLE MAINT BAY	10	480	3	12	BY MFR.	-	(3#12, #12G.) 3/4"C.		3	A,B,C
1-03	TRANE UHEC	VEHICLE PROCESSING	10	480	3	12	BY MFR.	-	(3#12, #12G.) 3/4"C.		3	A,B,C
1-04	TRANE UHEC	SPRINKLER	5	480	3	6	BY MFR.	-	(3#12, #12G.) 3/4"C.		3	A,B,C
1-05	TRANE UHEC	DRY VALVE/COMPRESSOR	5	480	3	6	BY MFR.	-	(3#12, #12G.) 3/4"C.		3	A,B,C

GENERAL NOTES
1 . JOB SITE ELEVATION = 500 FT.
2. REFER TO ELECTRICAL SHEETS FOR EMERGENCY TIER DETAILS

REMARK NOTES
A. HORIZONTAL DISCHARGE.
B. PROVIDE WALL MOUNTED THERMOSTAT.
C. PROVIDE 60 DEGREE NOZZLE TO DIRECT AIRFLOW DOWNWARD.

BASEBOARD RADIATION SCHEDULE (ELECTRIC)

CODE (BBR)	MANUFACTURER/ MODEL NO.	AREA SERVED	HEATER LENGTH (IN)	HEATER W/FT	ELECTRICAL KW	VOLT	PH	FLA	DISCON	FUSE	FEEDER
1-01	INDEECO BCSI 904U	VESTIBULE	29	275	0.5	277	1	1.8	30A/1P	LPS-RK-15SPI	(2#12,#12G) 3/4"C
1-02	INDEECO BCSI 904U	VESTIBULE	29	275	0.5	277	1	1.8	30A/1P	LPS-RK-15SPI	(2#12,#12G) 3/4"C

GENERAL NOTES
1. PROVIDE ZONE CONTROL PANEL CAPABLE OF LOCAL CONTROL AND BMS INTERFACE. HEATERS SERVING THE SAME AREA CAN BE GROUPED TOGETHER ON A ZONE CONTROLLER.
2. COORDINATE WITH OWNER AND ARCHITECT FOR COLOR FINISH SELECTION.
3. PROVIDE ALL TRIM PIECES FOR A COMPLETE AND CONTINUOUS INSTALLATION.
4. PROVIDE UNIT WITH FREESTANDING CURTAIN WALL INSTALLATION. PROVIDE ACCESSORIES FOR FINSHED INTERIOR AND EXTERIOR LOOK.

BRINKLEY SARGENT WIGINTON ARCHITECTS
Architect: Brinkley Sargent Wigginton Architects (972) 960-9970
Landscape: Kendall Landscape Architecture (214) 739-3226
Structural: L.A. Fuess Partners, Inc (214) 573-1118
MEP: M-E Engineers (214) 741-1589
Civil: KSA Engineers, Inc (903) 236-7700
Technology: M-E Engineers (303) 421-6656

LONGVIEW POLICE DEPARTMENT

518 W. SOUTH ST. LONGVIEW, TEXAS 75601

History

#	Date	Description

STATE OF TEXAS
LAUREN F. BERRY
117369
LICENSED
PROFESSIONAL ENGINEER
ME Engineers, Inc.
F-10231
08/19/2020

MECHANICAL SCHEDULES

BID ISSUE

20513
08/19/2020
M005

8/14/2020 11:03:47 AM

C:\Revit Projects\2019\URL_CENTRAL_M19_mechanical-sqdPZCJX.rvt

© 2020 Brinkley Sargent Wiginton Architects, Inc.

ELECTRIC VAV BOX SCHEDULE

CODE (VAV)	RTU	AREA SERVED	MANUFACTURER/ MODEL NO.	DESIGN CFM: COOLING CFM	DESIGN CFM: COOLING MIN. CFM	DESIGN CFM: HEATING	BOX CAPACITY (CFM) MIN.	BOX CAPACITY (CFM) MAX.	HEATING COIL: LAT F	CAP. MBH	KW	VOLT	PH	FLA	FUSE	DISC.	FEEDER	MAX. NC @ DESIGN MAX.	INLET SIZE	OUTLET SIZE	E-POWER TIER
1-01	RTU-1	ADMIN. ASST. / TRAINING CONSOLES / TRAINING COORDINATOR	TITUS DESV 8	525	315	315	145	700	90	12	3	277	1	10.8	LPS-RK-15SPI	30A/1P	(2#12,#12G) 3/4"C	24	8	12 X 10	1
1-02	RTU-1	WEST COMMUNICATIONS CENTER	TITUS DESV 12	1250	750	750	325	1600	90	28	8	277	1	28.9	LPS-RK-40SPI	60A/1P	(2#8,#10G) 3/4"C	27	12	16 X 15	1
1-03	RTU-1	MANAGER / ADMINISTRATOR / AFTER HOURS COUNTER	TITUS DESV 8	550	330	330	145	700	90	12	4	277	1	14.4	LPS-RK-20SPI	30A/1P	(2#12,#12G) 3/4"C	24	8	12 X 10	1
1-04	RTU-1	INTERIOR COMMUNICATIONS CENTER	TITUS DESV 12	1000	600	600	325	1600	90	23	7	277	1	25.3	LPS-RK-35SPI	60A/1P	(2#8,#10G) 3/4"C	27	12	16 X 15	1
1-38	RTU-1	NORTH COMMUNICATIONS CENTER / AUX CALL TAKER	TITUS DESV 12	1200	720	720	325	1600	90	27	8	277	1	28.9	LPS-RK-40SPI	60A/1P	(2#8,#10G) 3/4"C	27	12	16 X 15	1
				4525	0																
1-05	RTU-2	SHORT TERM&JUVENILE PROP.STOR. / SEXUAL ASSUALT PROP.STOR.	TITUS DESV 8	600	600	600	145	700	90	23	7	277	1	25.3	LPS-RK-35SPI	60A/1P	(2#8,#10G) 3/4"C	24	8	12 X 10	3
1-06	RTU-2	POWDER PROCESSING / PRIMARY LAB / CLEAN DRESS / ALTERNATE LIGHT	TITUS DESV 10	750	750	750	230	1100	90	28	8	277	1	28.9	LPS-RK-40SPI	60A/1P	(2#8,#10G) 3/4"C	25	10	14 x 12.5	2
1-07	RTU-2	NOT USED	#N/A		0	0	#N/A	#N/A	90									#N/A	#N/A	#N/A	
1-08	RTU-2	LARGE PROP. / CORRIDOR / LONG TERM PROP STOR	TITUS DESV 6	200	200	200	80	400	90	8	2	277	1	7.2	LPS-RK-10SPI	30A/1P	(2#12,#12G) 3/4"C	21	6	12 X 8	3
1-09	RTU-2	VEST/AFTERHOURS DROP/ EVIDENCE TRANSFER / DESTRUCTION / SPRINKLER	TITUS DESV 8	550	550	550	145	700	90	21	6	480	3	7.2	LPS-RK-10SPI	30A/3P	(3#12,#12G) 3/4"C	24	8	12 X 10	3
1-10	RTU-2	VEHICULAR PROCESSING	TITUS DESV 10	675	405	405	230	1100	90	15	4	277	1	14.4	LPS-RK-20SPI	30A/1P	(2#12,#12G) 3/4"C	25	10	14 x 12.5	3
1-11	RTU-2	K-9 STORAGE / VESTIBULE / CORRIDOR 1	TITUS DESV 10	750	675	675	230	1100	90	26	7	277	1	25.3	LPS-RK-35SPI	60A/1P	(2#8,#10G) 3/4"C	25	10	14 x 12.5	3
1-12	RTU-2	NOT USED	#N/A	0	0	0	#N/A	#N/A	90	0								#N/A	#N/A	#N/A	
1-13	RTU-2	SWAT STORAGE / VESTIBULE 1 / WEAPON CLEANING / ARMORY / FLEET STOR/WORK / FLEET OFFICE/ CORRIDOR 2	TITUS DESV 10	825	495	495	230	1100	90	19	5	277	1	18.1	LPS-RK-25SPI	30A/1P	(2#10,#10G) 3/4"C	25	10	14 x 12.5	1
1-14	RTU-2	NOT USED	#N/A	0	0	0	#N/A	#N/A	90	0								#N/A	#N/A	#N/A	
1-15	RTU-2	NOT USED	#N/A	0	0	0	#N/A	#N/A	90	0								#N/A	#N/A	#N/A	
1-16	RTU-2	DRYING CABINETS / PES INVESTIGATORS / SERGEANT / COMPARISION LAB / PES STORAGE	TITUS DESV 10	775	725	725	230	1100	90	27	8	480	3	9.6	LPS-RK-15SPI	30A/3P	(3#12,#12G) 3/4"C	25	10	14 x 12.5	2
1-17	RTU-2	LARGE ITEM STORAGE / SUPPLY / CORRIDOR 3 / STORAGE / TUBE STORAGE	TITUS DESV 6	300	300	300	80	400	90	11	3	480	3	3.6	LPS-RK-5SP	30A/3P	(3#12,#12G) 3/4"C	21	6	12 X 8	3
1-18	RTU-2	DRUG STORAGE	TITUS DESV 4	150	150	150	45	225	90	6	2	277	1	7.2	LPS-RK-10SPI	30A/1P	(2#12,#12G) 3/4"C	24	4	12 X 8	3
1-19	RTU-2	MAJOR CASE/EVID WORK / EVID LOCKERS / EVID PROCESSING / WEAPON STORAGE	TITUS DESV 8	600	360	360	145	700	90	14	4	277	1	14.4	LPS-RK-20SPI	30A/1P	(2#12,#12G) 3/4"C	24	8	12 X 10	2
1-20	RTU-2	SUPERVISOR / TOILET / COFFEE	TITUS DESV 6	350	210	210	80	400	90	8	2	277	1	7.2	LPS-RK-10SPI	30A/1P	(2#12,#12G) 3/4"C	21	6	12 X 8	3
1-21	RTU-2	EVID VIEWING ATTORNEY / EV PROP FILES / STAFF SERVICE WINDOW / PUBLIC SERVICE WINDOW / EVIDENCE/PROPERTY WORK	TITUS DESV 8	600	360	360	145	700	90	14	4	277	1	14.4	LPS-RK-20SPI	30A/1P	(2#12,#12G) 3/4"C	24	8	12 X 10	3
1-22	RTU-2	STAFF STAIRS??? / STAFF VEST / K-9 OFFICE	TITUS DESV 10	875	625	625	230	1100	95	27	8	277	1	28.9	LPS-RK-40SPI	30A/1P	(2#8,#10G) 3/4"C	25	10	14 x 12.5	3
1-23	RTU-2	CORRIDOR 4 & 5 / PATROL LOCKERS / ICE/WATER/UTILITY / HONOR GUARD	TITUS DESV 8	375	225	225	145	700	90	9	2	277	1	7.2	LPS-RK-10SPI	30A/1P	(2#12,#12G) 3/4"C	24	8	12 X 10	3
1-24	RTU-2	WAITING(5) / SEX OFFENDER REG E&W	TITUS DESV 6	350	210	210	80	400	90	8	2	277	1	7.2	LPS-RK-10SPI	30A/1P	(2#12,#12G) 3/4"C	21	6	12 X 8	3
1-25	RTU-2	PHOTO/FINGERPRINT / RAMP N&S / HOLD JUV / 1009 SEX OFF FILES / VESTIBULE 2	TITUS DESV 6	300	180	180	80	400	90	7	2	277	1	7.2	LPS-RK-10SPI	30A/1P	(2#12,#12G) 3/4"C	21	6	12 X 8	3
1-26	RTU-2	SECURITY DESK / COFFEE	TITUS DESV 4	150	90	90	45	225	90	3	1	277	1	3.6	LPS-RK-5SP	30A/1P	(2#12,#12G) 3/4"C	24	4	12 X 8	2
1-27	RTU-2	NOT USED	#N/A	0	0	0	#N/A	#N/A	90	0								#N/A	#N/A	#N/A	
1-28	RTU-2	LOBBY N / LOBBY STAIRS N	TITUS DESV 10	875	525	525	230	1100	90	20	6	277	1	21.7	LPS-RK-30SPI	30A/1P	(2#10,#10G) 3/4"C	25	10	14 x 12.5	3
1-29	RTU-2	LOBBY S	TITUS DESV 10	875	525	525	230	1100	90	20	6	277	1	21.7	LPS-RK-30SPI	30A/1P	(2#10,#10G) 3/4"C	25	10	14 x 12.5	3
1-30	RTU-2	COPY/WORK/COFFEE / SUPERVISOR S / SOFT INTERVIEW	TITUS DESV 6	300	180	180	80	400	90	7	2	277	1	7.2	LPS-RK-10SPI	30A/1P	(2#12,#12G) 3/4"C	21	6	12 X 8	2
1-31	RTU-2	CORRIDOR 6 / VESTIBULE 3	TITUS DESV 12	1000	325	900	325	1600	95	39	11	480	3	13.2	LPS-RK-15SPI	30A/3P	(3#12,#12G) 3/4"C	27	12	16 X 15	3
1-32	RTU-2	RECORDS COUNTER / DELIVERY STOR / RECORDS CLERKS / CENTRAL MAIL/OFFICER COUNTER	TITUS DESV 10	850	510	510	230	1100	90	19	6	480	3	7.2	LPS-RK-10SPI	30A/3P	(3#12,#12G) 3/4"C	25	10	14 x 12.5	2
1-33	RTU-2	SECURE VESTIBULE / WORK/PROCESS DESK / SINGLE HOLDING 1 & 2	TITUS DESV 6	350	210	210	80	400	90	8	2	277	1	7.2	LPS-RK-10SPI	30A/1P	(2#12,#12G) 3/4"C	21	6	12 X 8	3
1-34	RTU-2	BREAK / SECURE VESTIBULE / LOCKERS / INTERROGATION (3) / CORRIDOR	TITUS DESV 8	400	240	240	145	700	90	9	3	277	1	10.8	LPS-RK-15SPI	30A/1P	(2#12,#12G) 3/4"C	24	8	12 X 10	3
1-35	RTU-2	CORRIDOR 8 & 9 & 10 / LOCKERS 2	TITUS DESV 8	400	240	240	145	700	90	9	3	277	1	10.8	LPS-RK-15SPI	30A/1P	(2#12,#12G) 3/4"C	24	8	12 X 10	3
1-36	RTU-2	CONFERENCE (9)	TITUS DESV 8	525	315	315	145	700	90	12	3	480	3	3.6	LPS-RK-5SP	30A/3P	(3#12,#12G) 3/4"C	24	8	12 X 10	3
1-37	RTU-2	IT WORKROOM	TITUS DESV 8	600	450	450	145	700	90	17	5	480	3	6	LPS-RK-10SPI	30A/3P	(3#12,#12G) 3/4"C	24	8	12 X 10	3
2-01	RTU-2	EXERCISE	TITUS DESV 14	1700	1700	1700	450	2500	90	64	19	480	3	22.9	LPS-RK-35SPI	30A/3P	(3#10,#10G) 3/4"C	29	14	20 X 17.5	3
2-02	RTU-2	DRESSING 1& 2 & 3 & 4 & 5 / ACCESSIBLE DRESSING / TOILET SHOWER	TITUS DESV 8	475	475	475	145	700	90	18	5	277	1	18.1	LPS-RK-25SPI	30A/1P	(2#10,#10G) 3/4"C	24	8	12 X 10	2
2-03	RTU-2	MENS / VESTIBULE / WOMENS / ACCESSIBLE SHOWER	TITUS DESV 12	925	925	925	325	1600	90	35	10	480	3	12	LPS-RK-20SPI	30A/3P	(3#12,#12G) 3/4"C	27	12	16 X 15	3
2-04	RTU-2	SOUND VEST / QUIET RM /LACTATION/QUIET / SUPPLY / DRYCLEAN	TITUS DESV 6	250	150	150	80	400	90	6	2	277	1	7.2	LPS-RK-15SPI	30A/1P	(2#12,#12G) 3/4"C	21	6	12 X 8	3
2-05	RTU-2	LOCKER ROOM / LOCKER CIRC / CORRIDOR	TITUS DESV 8	400	400	400	145	700	90	15	4	480	3	4.8	LPS-RK-10SPI	30A/3P	(3#12,#12G) 3/4"C	24	8	12 X 10	2
2-06	RTU-2	LOCKER ROOM / LOCKER CIRC	TITUS DESV 8	600	600	600	145	700	90	23	7	277	1	25.3	LPS-RK-35SPI	30A/1P	(2#8,#10G) 3/4"C	24	8	12 X 10	2
2-07	RTU-2	ACCESIBLE SHOWER 1 & 2 / SHOWER 1 & 2	TITUS DESV 6	300	300	300	80	400	90	11	3	277	1	10.8	LPS-RK-15SPI	30A/1P	(2#12,#12G) 3/4"C	21	6	12 X 8	3
2-08	RTU-2	LOCKER ROOM / LOCKER CIRC / UTILITY ROOM	TITUS DESV 8	500	500	500	145	700	90	19	6	277	1	21.7	LPS-RK-30SPI	30A/1P	(2#10,#10G) 3/4"C	24	8	12 X 10	2
2-11	RTU-2	SPECIAL INVESTIGATIONS	TITUS DESV 8	550	330	330	145	700	90	12	4	277	1	14.4	LPS-RK-20SPI	30A/1P	(2#12,#12G) 3/4"C	24	8	12 X 10	3
2-16	RTU-2	SERGEANT (4)	TITUS DESV 8	450	270	270	145	700	90	10	3	480	3	3.6	LPS-RK-5SP	30A/3P	(3#12,#12G) 3/4"C	24	8	12 X 10	2
2-17	RTU-2	SERGEANT (4)	TITUS DESV 6	350	210	210	80	400	90	8	2	277	1	7.2	LPS-RK-10SPI	30A/1P	(2#12,#12G) 3/4"C	21	6	12 X 8	2
2-19	RTU-2	BRIEFING	TITUS DESV 14	2000	1200	1200	450	2500	90	45	13	480	3	15.6	LPS-RK-25SPI	30A/1P	(2#12,#12G) 3/4"C	29	14	20 X 17.5	1
2-22	RTU-2	SERGEANT(4)	TITUS DESV 8	400	240	240	145	700	90	9	3	277	1	10.8	LPS-RK-15SPI	30A/1P	(2#12,#12G) 3/4"C	24	8	12 X 10	2
2-24	RTU-2	CONFERENCE	TITUS DESV 6	300	180	180	80	400	90	7	2	277	1	7.2	LPS-RK-10SPI	30A/1P	(2#12,#12G) 3/4"C	21	6	12 X 8	2
2-25	RTU-2	CORRIDOR 3 / RECEPTION / ADMIN ASSIST	TITUS DESV 6	200	160	160	80	400	90	6	2	277	1	7.2	LPS-RK-10SPI	30A/1P	(2#12,#12G) 3/4"C	21	6	12 X 8	2
2-27	RTU-2	LIEUTENANTS & 1 & 2	TITUS DESV 10	825	495	495	230	1100	90	19	5	277	1	18.1	LPS-RK-25SPI	30A/1P	(2#10,#10G) 3/4"C	25	10	14 x 12.5	2
2-38	RTU-2	LOBBY AND STAIRS ST-01 E	TITUS DESV 12	1300	850	850	325	1600	90	32	9	277	1	32.5	LPS-RK-45SPI	30A/1P	(2#6,#10G) 1"C	27	12	16 X 15	3
				26875	12500																
2-09	RTU-3	TRAFFIC UNIT	TITUS DESV 6	300	180	180	80	400	90	7	2	277	1	7.2	LPS-RK-10SPI	30A/1P	(2#12,#12G) 3/4"C	21	6	12 X 8	2
2-10	RTU-3	TRAFFIC SERGEANT / STORAGE / SERGEANT(2)	TITUS DESV 8	400	240	240	145	700	90	9	3	277	1	10.8	LPS-RK-15SPI	30A/1P	(2#12,#12G) 3/4"C	24	8	12 X 10	2
2-12	RTU-3	NOT USED	#N/A	0	0	0	#N/A	#N/A	90	0											
2-13	RTU-3	VESTIBULE 1 / CORRIDOR 2	TITUS DESV 8	425	375	375	145	700	90	14	4	480	3	4.8	LPS-RK-10SPI	30A/3P	(3#12,#12G) 3/4"C	24	8	12 X 10	3
2-14	RTU-3	BREAKROOM/VENDING	TITUS DESV 12	975	585	585	325	1600	90	22	6	277	1	21.7	LPS-RK-30SPI	30A/1P	(2#10,#10G) 3/4"C	27	12	16 X 15	1
2-15	RTU-3	EQUIP DISTRIBUTION/STOR / JUVENILE CONF (4)	TITUS DESV 6	275	165	165	80	400	90	6	2	277	1	7.2	LPS-RK-10SPI	30A/1P	(2#12,#12G) 3/4"C	21	6	12 X 8	3
2-18	RTU-3	REPORT WRITING / CORRIDOR 1/2 & 1	TITUS DESV 8	400	240	240	145	700	90	9	3	277	1	10.8	LPS-RK-15SPI	30A/1P	(2#12,#12G) 3/4"C	24	8	12 X 10	1
2-20	RTU-3	REPORT WRITING / CORRIDOR 2/2 & 6	TITUS DESV 8	400	240	240	145	700	90	9	3	480	3	3.6	LPS-RK-5SP	30A/3P	(3#12,#12G) 3/4"C	24	8	12 X 10	3
2-21	RTU-3	PLANNING RESEARCH	TITUS DESV 8	450	270	270	145	700	90	10	3	480	3	3.6	LPS-RK-5SP	30A/3P	(3#12,#12G) 3/4"C	24	8	12 X 10	3
2-23	RTU-3	SPECIAL OPERATIONS LT / PLANNING RESEARCH SERGEANT	TITUS DESV 8	400	240	240	145	700	90	9	3	277	1	10.8	LPS-RK-15SPI	30A/1P	(2#12,#12G) 3/4"C	24	8	12 X 10	3
2-26	RTU-3	RECORDS ARCHIEVES / SRO/SI/PRI/SERGEANTS/ GEN STOR / COMM SERV/PAR STOR	TITUS DESV 6	300	180	180	80	400	90	7	2	277	1	7.2	LPS-RK-10SPI	30A/1P	(2#12,#12G) 3/4"C	21	6	12 X 8	3
2-28	RTU-3	QUARTERMASTER STOR / QUARTERMASTER	TITUS DESV 6	200	160	160	80	400	90	6	2	277	1	7.2	LPS-RK-10SPI	30A/1P	(2#12,#12G) 3/4"C	21	6	12 X 8	3
2-29	RTU-3	CORRIDOR 7	TITUS DESV 12	900	725	725	325	1600	90	27	8	480	3	9.6	LPS-RK-15SPI	30A/3P	(3#12,#12G) 3/4"C	27	12	16 X 15	3
2-30	RTU-3	OFFICERS / FILES/STOR / CORRIDOR 8 / WORK/COPY	TITUS DESV 10	800	480	480	230	1100	90	18	5	277	1	18.1	LPS-RK-25SPI	30A/1P	(2#10,#10G) 3/4"C	25	10	14 x 12.5	3
2-31	RTU-3	NOT USED	#N/A	0	0	0	#N/A	#N/A	90	0											
2-32	RTU-3	INTERVIEW / CONFERENCE	TITUS DESV 6	350	210	210	80	400	90	8	2	277	1	7.2	LPS-RK-10SPI	30A/1P	(2#12,#12G) 3/4"C	21	6	12 X 8	3
2-33	RTU-3	PHYSICAL TRAINING/ VESTIBULE 2 / CORRIDOR 9 / STORAGE 1	TITUS DESV 14	1825	1095	1095	450	2500	90	41	12	480	3	14.4	LPS-RK-20SPI	30A/3P	(3#12,#12G) 3/4"C	29	14	20 X 17.5	3
2-34	RTU-3	TRAINING/COMMUNITY ROOM INTERIOR	TITUS DESV 12	1225	735	735	325	1600	90	28	8	277	1	28.9	LPS-RK-40SPI	30A/1P	(2#8,#10G) 3/4"C	27	12	16 X 15	3
2-35	RTU-3	TRAINING/COMMUNITY ROOM INTERIOR / VESTIBULE 3	TITUS DESV 14	2000	1200	1200	450	2500	90	45	13	480	3	15.6	LPS-RK-25SPI	30A/3P	(3#12,#12G) 3/4"C	29	14	20 X 17.5	3
2-36	RTU-3	SERGEANT 2 / TRAINING SGT	TITUS DESV 8	400	240	240	145	700	90	9	3	277	1	10.8	LPS-RK-15SPI	30A/1P	(2#12,#12G) 3/4"C	24	8	12 X 10	3
2-37	RTU-3	LOBBY W	TITUS DESV 12	1300	875	875	325	1600	90	33	10	480	1	12	LPS-RK-20SPI	30A/3P	(3#12,#12G) 3/4"C	27	12	16 X 15	3
3-01	RTU-3	TECH INVESTIGATORS / CYBER LAB RECEIVING / EVIDENCE STORAGE / SOLDER WORK STATION	TITUS DESV 10	700	420	420	230	1100	90	16	5	277	1	18.1	LPS-RK-25SPI	30A/1P	(2#10,#10G) 3/4"C	25	10	14 x 12.5	1
3-02	RTU-3	NARCOTICS STORAGE / EQUIP STOR / COPY&WORK&COFFEE	TITUS DESV 6	250	200	200	80	400	90	8	2	277	1	7.2	LPS-RK-10SPI	30A/1P	(2#12,#12G) 3/4"C	21	6	12 X 8	3
3-03	RTU-3	TECH INVESTIGATORS	TITUS DESV 10	825	495	495	230	1100	90	19	5	277	1	18.1	LPS-RK-25SPI	30A/1P	(2#10,#10G) 3/4"C	25	10	14 x 12.5	3
3-04	RTU-3	SERGEANT & 1 & 2	TITUS DESV 12	1025	615	615	325	1600	90	23	7	480	3	8.4	LPS-RK-15SPI	30A/3P	(3#12,#12G) 3/4"C	27	12	16 X 15	2
3-05	RTU-3	DETECTIVES / SERGEANT 3	TITUS DESV 10	850	510	510	230	1100	90	19	6	480	3	7.2	LPS-RK-10SPI	30A/3P	(3#12,#12G) 3/4"C	25	10	14 x 12.5	3
3-06	RTU-3	CORRIDOR & 1	TITUS DESV 10	800	480	480	230	1100	90	18	5	277	1	18.1	LPS-RK-25SPI	30A/1P	(2#10,#10G) 3/4"C	25	10	14 x 12.5	3
3-07	RTU-3	CORRIDOR 2 & 3 & 4 1/2 / VIDEO STATION / DETECTIVE/ TASK FORCE OFFICERS & 1	TITUS DESV 6	350	210	210	80	400	90	8	2	277	1	7.2	LPS-RK-10SPI	30A/1P	(2#12,#12G) 3/4"C	21	6	12 X 8	3
3-08	RTU-3	CORRIDOR 4 1/2 & 5 / DETECTIVES 1	TITUS DESV 8	500	300	300	145	700	90	11	3	480	3	3.6	LPS-RK-5SP	30A/3P	(3#12,#12G) 3/4"C	24	8	12 X 10	3
3-09	RTU-3	EVIDENCE/STRATEGY CONF	TITUS DESV 12	1200	720	720	325	1600	90	27	8	277	1	28.9	LPS-RK-40SPI	30A/1P	(2#8,#10G) 3/4"C	27	12	16 X 15	1
3-10	RTU-3	REPORT WRITING OVERLOOK 1/2	TITUS DESV 8	400	240	240	145	700	90	9	3	277	1	10.8	LPS-RK-15SPI	30A/1P	(2#12,#12G) 3/4"C	24	8	12 X 10	3
3-11	RTU-3	NTERVIEW & 1 / CORRIDOR 6&7&8&9 / ADMIN ASIST /PUB WAITING	TITUS DESV 12	900	540	540	325	1600	90	20	6	277	1	21.7	LPS-RK-30SPI	30A/1P	(2#10,#10G) 3/4"C	27	12	16 X 15	3
3-12	RTU-3	CORRIDOR 10&11 / DETECTIVES 2	TITUS DESV 8	500	300	300	145	700	80	8	2	277	1	7.2	LPS-RK-10SPI	30A/1P	(2#12,#12G) 3/4"C	24	8	12 X 10	3
3-13	RTU-3	LIEUTENANT / VICTIM ASSIST / SOFT INTERVIEW	TITUS DESV 12	1000	600	600	325	1600	90	23	7	480	3	8.4	LPS-RK-15SPI	30A/3P	(3#12,#12G) 3/4"C	27	12	16 X 15	2
3-14	RTU-3	RECEPTION / INTERROGATION 1&2 / CORRIDOR 12 / SUSPECT WAITING	TITUS DESV 8	450	450	450	145	700	90	17	5	277	1	18.1	LPS-RK-25SPI	30A/1P	(2#10,#10G) 3/4"C	24	8	12 X 10	3
3-15	RTU-3	3001 - OVERLOOK	TITUS DESV 14	1950	1170	1170	450	2500	90	44	13	480	3	15.6	LPS-RK-25SPI	30A/3P	(3#12,#12G) 3/4"C	29	14	20 X 17.5	3
3-16	RTU-3	CORRIDOR 13 / PIO SOCIAL MEDIA	TITUS DESV 6	300	180	180	80	400	90	7	2	277	1	7.2	LPS-RK-10SPI	30A/1P	(2#12,#12G) 3/4"C	21	6	12 X 8	1
3-17	RTU-3	CAPTAIN / SUPPORT SERVICES LT	TITUS DESV 10	700	420	420	230	1100	90	16	5	277	1	18.1	LPS-RK-25SPI	30A/1P	(2#10,#10G) 3/4"C	25	10	14 x 12.5	2
3-18	RTU-3	RECEPTION / ADMIN ASSIST/ CONF INTERV	TITUS DESV 8	400	240	240	145	700	90	9	3	277	1	10.8	LPS-RK-15SPI	30A/1P	(2#12,#12G) 3/4"C	24	8	12 X 10	3
3-19	RTU-3	CAPTAIN 1	TITUS DESV 8	425	255	255	145	700	90	10	3	277	1	10.8	LPS-RK-15SPI	30A/1P	(2#12,#12G) 3/4"C	24	8	12 X 10	2
3-20	RTU-3	CORRIDOR 14 / ADMIN SERGEANT / IA LIEUTENANT & 1 / PERSONNEL FILES / IA FILES	TITUS DESV 10	675	600	600	230	1100	90	23	7	480	3	8.4	LPS-RK-15SPI	30A/3P	(3#12,#12G) 3/4"C	25	10	14 x 12.5	2
3-21	RTU-3	CONFERENCE (14)	TITUS DESV 12	1250	750	750	325	1600	90	28	8	480	3	9.6	LPS-RK-15SPI	30A/3P	(3#12,#12G) 3/4"C	27	12	16 X 15	1
3-22	RTU-3	CAPTAIN 2	TITUS DESV 6	325	195	195	80	400	90	7	2	277	1	7.2	LPS-RK-10SPI	30A/1P	(2#12,#12G) 3/4"C	21	6	12 X 8	2
3-23	RTU-3	EXEC ASSIST / OFFICE MANAGER / COFFEE / WORK COPY/ CORRIDOR 15&16&17	TITUS DESV 10	700	420	420	230	1100	90	16	5	277	1	18.1	LPS-RK-25SPI	30A/1P	(2#10,#10G) 3/4"C	25	10	14 x 12.5	2
3-24	RTU-3	POLICE CHIEF	TITUS DESV 14	1700	1020	1020	450	2500	90	39	11	480	3	13.2	LPS-RK-20SPI	30A/3P	(3#12,#12G) 3/4"C	29	14	20 X 17.5	2
3-25	RTU-3	ASSIST CHIEF	TITUS DESV 8	425	255	255	145	700	90	10	3	277	1	10.8	LPS-RK-15SPI	30A/1P	(2#12,#12G) 3/4"C	24	8	12 X 10	2
3-26	RTU-3	ASSISTANT CHIEF 1	TITUS DESV 10	750	450	450	230	1100	90	17	5	277	1	18.1	LPS-RK-25SPI	30A/1P	(2#10,#10G) 3/4"C	25	10	14 x 12.5	2
3-27	RTU-3	CENTRAL SUPPLY / CORRIDOR 18	TITUS DESV 4	100	60	60	45	225	90	2	1	277	1	3.6	LPS-RK-5SP	30A/1P	(2#12,#12G) 3/4"C	24	4	12 X 8	3
3-28	RTU-3	REPORT WRITING OVERLOOK 2/2	TITUS DESV 8	400	240	240	145	700	90	9	3	277	1	10.8	LPS-RK-15SPI	30A/1P	(3#12,#12G) 3/4"C	24	8	12 X 10	3
				33175																	

GENERAL NOTES

1. CONTROLS SHALL BE BY MANUFACTURER OR BY CONTROL MANUFACTURER AND INSTALLED AT THE FACTORY (SEE SPECIFICATIONS). CONTROLS TO BE ON UPS POWER TO SHUT OR ENABLE BOVES ON EMERGENCY POWER.
2. MOUNT WITH 5 STRAIGHT DUCT DIAMETERS UPSTREAM OF THE BOX.
3. MAXIMUM INLET S.P.= 1.25IN. WC.
4. MAXIMUM NC LEVELS ARE RADIATED SOUND DATA AND BASED ON THE MAXIMUM BOX CFM LISTED AND AT A PRESSURE DROP ACROSS THE BOX OF 2.0".
5. HEATING COIL DISCHARGE TEMPERATURES SHALL NOT EXCEED 100F OR HAVE A TEMPERATURE RISE GREATER THAN 45F.
6. COORDINATE DDC CONTROL POWER WITH ELECTRICAL.
7. PROVIDE SCR ELECTRIC HEAT. COORDINATE 3' NEC CLEARANCE OF ALL ELECTRIC HEAT SECTIONS IN BOXES.
8. REFER TO ELECTRICAL SHEETS FOR EMERGENCY TIER DETAILS

BRINKLEY SARGENT WIGINTON ARCHITECTS
Architect: Brinkley Sargent Wiginton Architects (972) 960-9970
Landscape: Kendall Landscape Architecture (214) 739-3226
Structural: L.A. Fuess Partners, Inc (214) 593-1118
MEP: M-E Engineers (214) 741-1589
Civil: KSA Engineers, Inc (903) 236-7700
Technology: M-E Engineers (303) 421-6656

LONGVIEW POLICE DEPARTMENT
518 W. SOUTH ST. LONGVIEW, TEXAS 75601

History

#	Date	Description

STATE OF TEXAS
LAUREN F. BERRY
117369
LICENSED
PROFESSIONAL ENGINEER
ME Engineers, Inc.
F-10231
08/19/2020

MECHANICAL SCHEDULES

BID ISSUE

20513
08/19/2020
M006

8/14/2020 11:03:48 AM
C:\Revit Projects\2019\LPD_CENTRAL_M19_christopher.hallPZCUX.rvt

© 2020 Brinkley Sargent Wigginton Architects, Inc.

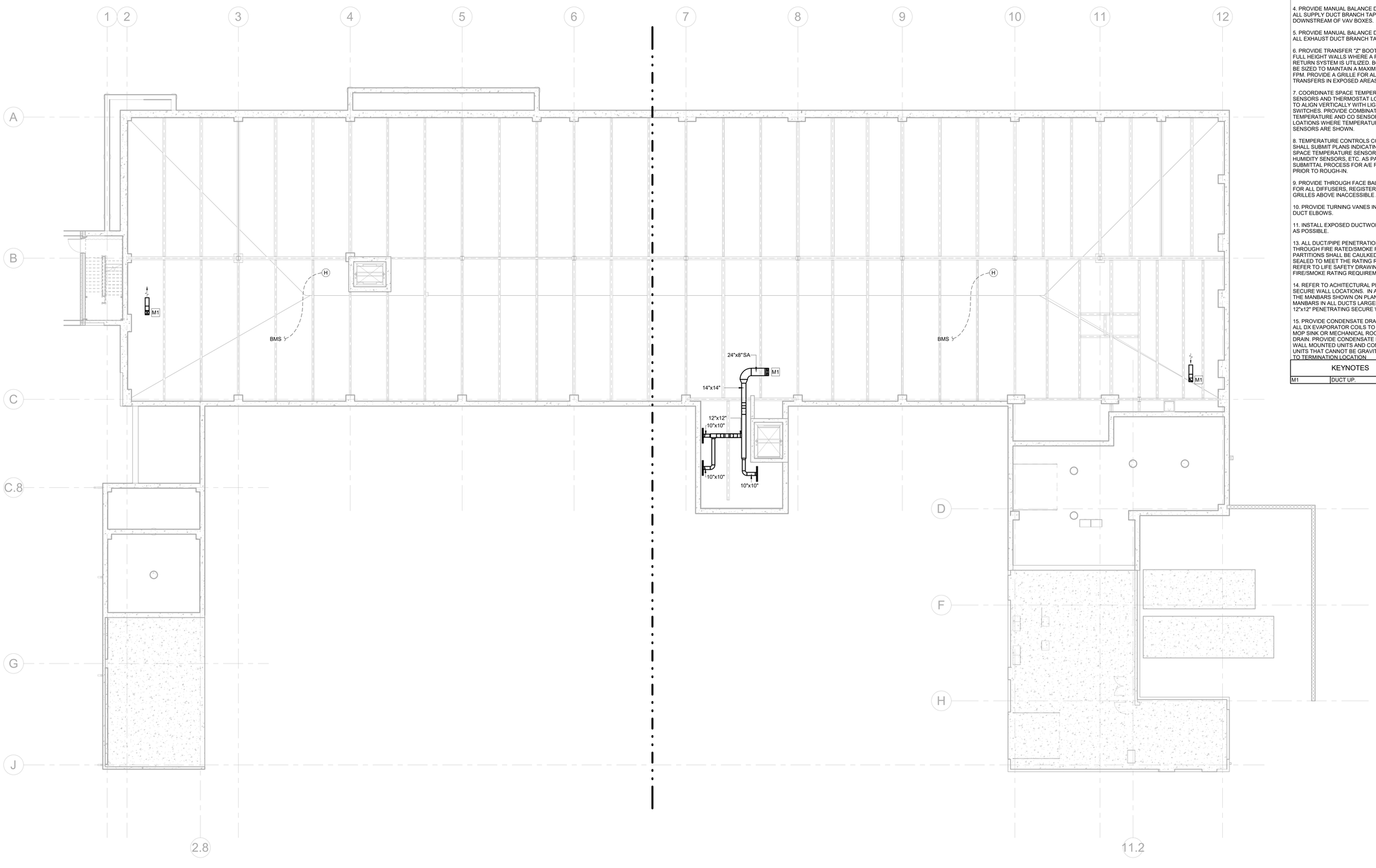

1 CRAWL SPACE - MECHANICAL PLAN
3/32" = 1'-0"

GENERAL NOTES:

1. THE DRAWINGS ARE DIAGRAMMATIC IN NATURE. THE CONTRACTOR IS RESPONSIBLE FOR ALL OFFSETS, TRANSITIONS, ELBOWS, ETC. AS REQUIRED IN DUCTWORK, PIPING, SUPPORTS, ETC. TO COMPLETE THE WORK IN A CLEAN FUNCTIONAL INSTALLATION THAT IS FULLY COORDINATED WITH ALL OTHER TRADES. ANY PRICING EFFORT SHALL TAKE THESE FACTORS INTO ACCOUNT.

2. MAINTAIN CODE REQUIRED AREA OF SEPARATION FROM OUTSIDE AIR INTAKES TO TERMINATIONS OF EXHAUST, COMBUSTION AIR, PLUMBING VENTS, ETC.

3. COORDINATE EQUIPMENT HOUSEKEEPING PAD DIMENSIONS AND LAYOUT WITH THE GENERAL CONTRACTOR BASED ON FINAL EQUIPMENT SIZES.

4. PROVIDE MANUAL BALANCE DAMPERS IN ALL SUPPLY DUCT BRANCH TAPS DOWNSTREAM OF VAV BOXES.

5. PROVIDE MANUAL BALANCE DAMPERS IN ALL EXHAUST DUCT BRANCH TAPS.

6. PROVIDE TRANSFER "Z" BOOT DUCTS IN FULL HEIGHT WALLS WHERE A PLENUM RETURN SYSTEM IS UTILIZED. BOOTS SHALL BE SIZED TO MAINTAIN A MAXIMUM OF 400 FPM. PROVIDE A GRILLE FOR ALL TRANSFERS IN EXPOSED AREAS. RE: ARCH.

7. COORDINATE SPACE TEMPERATURE SENSORS AND THERMOSTAT LOCATIONS TO ALIGN VERTICALLY WITH LIGHT SWITCHES. PROVIDE COMBINATION TEMPERATURE AND CO SENSORS AT ALL LOATIONS WHERE TEMPERATURE SENSORS ARE SHOWN.

8. TEMPERATURE CONTROLS CONTRACTOR SHALL SUBMIT PLANS INDICATING ALL SPACE TEMPERATURE SENSORS, T-STATS, HUMIDITY SENSORS, ETC. AS PART OF SUBMITTAL PROCESS FOR A/E REVIEW PRIOR TO ROUGH-IN.

9. PROVIDE THROUGH FACE BALANCING FOR ALL DIFFUSERS, REGISTERS, AND GRILLES ABOVE INACCESSIBLE AREAS.

10. PROVIDE TURNING VANES IN ALL 90° DUCT ELBOWS.

11. INSTALL EXPOSED DUCTWORK AS HIGH AS POSSIBLE.

13. ALL DUCT/PIPE PENETRATIONS THROUGH FIRE RATED/SMOKE RATED PARTITIONS SHALL BE CAULKED AND SEALED TO MEET THE RATING REQUIRED. REFER TO LIFE SAFETY DRAWINGS FOR FIRE/SMOKE RATING REQUIREMENTS.

14. REFER TO ACHITECTURAL PLANS FOR SECURE WALL LOCATIONS. IN ADDITION TO THE MANBARS SHOWN ON PLAN PROVIDE MANBARS IN ALL DUCTS LARGER THEN 12"x12" PENETRATING SECURE WALLS.

15. PROVIDE CONDENSATE DRAIN FROM ALL DX EVAPORATOR COILS TO NEAREST MOP SINK OR MECHANICAL ROOM FLOOR DRAIN. PROVIDE CONDENSATE PUMP FOR WALL MOUNTED UNITS AND CONCEALED UNITS THAT CANNOT BE GRAVITY DRAINED TO TERMINATION LOCATION

KEYNOTES	
M1	DUCT UP.

Architect: Brinkley Sargent Wigginton Architects (972) 960-9970
Landscape: Kendall Landscape Architecture (214) 739-3226
Structural: L.A. Fuess Partners, Inc (214) 593-1118
MEP: M-E Engineers (214) 741-1589
Civil: KSA Engineers, Inc (903) 236-7700
Technology: M-E Engineers (303) 421-6656

BRINKLEY SARGENT WIGINTON ARCHITECTS

LONGVIEW POLICE DEPARTMENT

518 W. SOUTH ST. LONGVIEW, TEXAS 75601

History		
#	Date	Description

STATE OF TEXAS
LAUREN F. BERRY
117369
LICENSED
PROFESSIONAL ENGINEER
ME Engineers, Inc.
F-10231
08/19/2020

CRAWL SPACE - MECHANICAL PLAN

20513
08/19/2020
M200

BID ISSUE

8/14/2020 11:03:59 AM

C:\Revit Projects\2019\LPD_CENTRAL_MEP_christopher.suttle2020.rvt

© 2020 Brinkley Sargent Wigintn Architects, Inc.

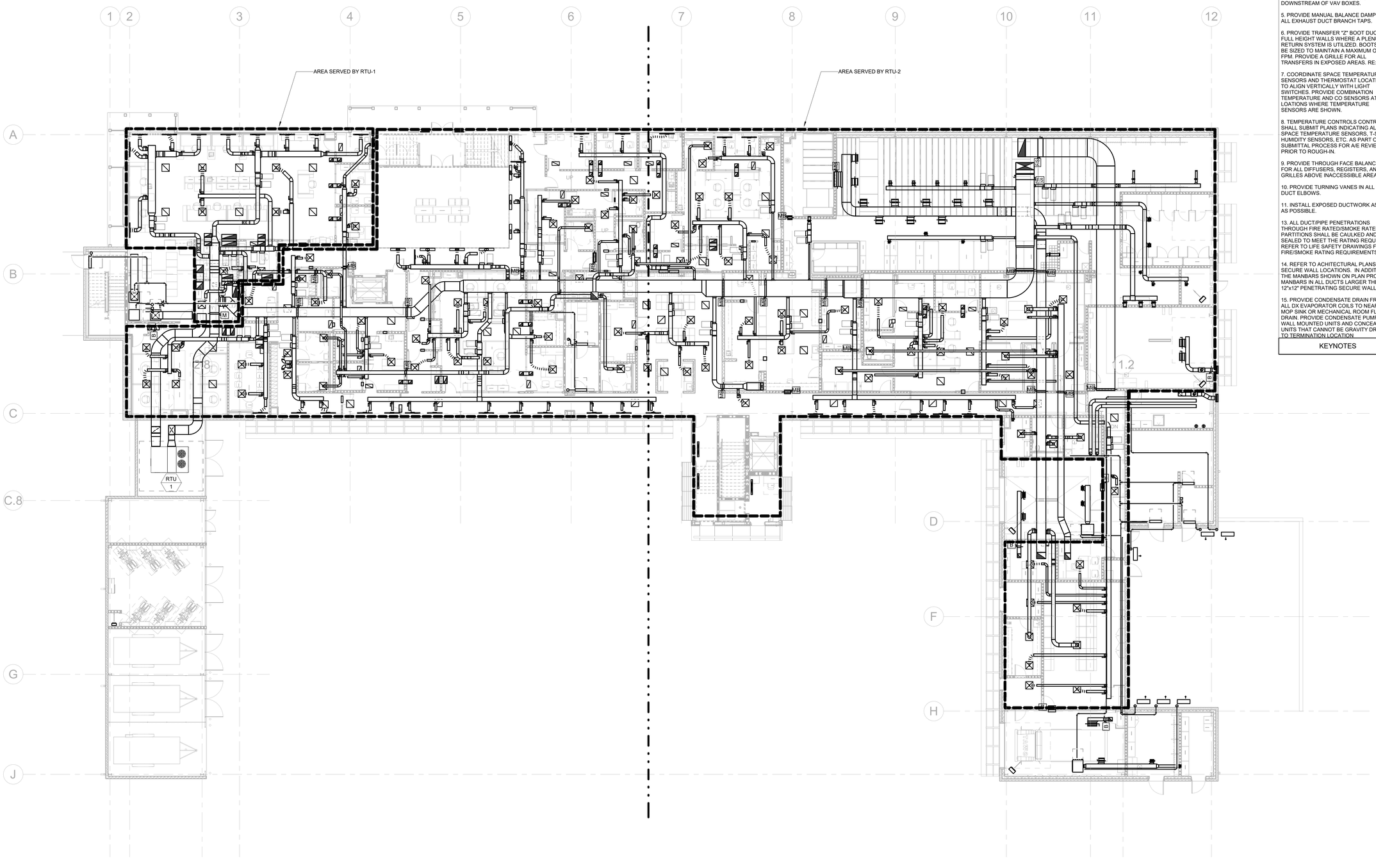

1 LEVEL 1 - MECHANICAL OVERALL PLAN
3/32" = 1'-0"

GENERAL NOTES:

1. THE DRAWINGS ARE DIAGRAMMATIC IN NATURE. THE CONTRACTOR IS RESPONSIBLE FOR ALL OFFSETS, TRANSITIONS, ELBOWS, ETC. AS REQUIRED IN DUCTWORK, PIPING, SUPPORTS, ETC. TO COMPLETE THE WORK IN A CLEAN FUNCTIONAL INSTALLATION THAT IS FULLY COORDINATED WITH ALL OTHER TRADES. ANY PRICING EFFORT SHALL TAKE THESE FACTORS INTO ACCOUNT.

2. MAINTAIN CODE REQUIRED AREA OF SEPARATION FROM OUTSIDE AIR INTAKES TO TERMINATIONS OF EXHAUST, COMBUSTION AIR, PLUMBING VENTS, ETC.

3. COORDINATE EQUIPMENT HOUSEKEEPING PAD DIMENSIONS AND LAYOUT WITH THE GENERAL CONTRACTOR BASED ON FINAL EQUIPMENT SIZES.

4. PROVIDE MANUAL BALANCE DAMPERS IN ALL SUPPLY DUCT BRANCH TAPS DOWNSTREAM OF VAV BOXES.

5. PROVIDE MANUAL BALANCE DAMPERS IN ALL EXHAUST DUCT BRANCH TAPS.

6. PROVIDE TRANSFER "Z" BOOT DUCTS IN FULL HEIGHT WALLS WHERE A PLENUM RETURN SYSTEM IS UTILIZED. BOOTS SHALL BE SIZED TO MAINTAIN A MAXIMUM OF 400 FPM. PROVIDE A GRILLE FOR ALL TRANSFERS IN EXPOSED AREAS. RE: ARCH.

7. COORDINATE SPACE TEMPERATURE SENSORS AND THERMOSTAT LOCATIONS TO ALIGN VERTICALLY WITH LIGHT SWITCHES. PROVIDE COMBINATION TEMPERATURE AND CO SENSORS AT ALL LOATIONS WHERE TEMPERATURE SENSORS ARE SHOWN.

8. TEMPERATURE CONTROLS CONTRACTOR SHALL SUBMIT PLANS INDICATING ALL SPACE TEMPERATURE SENSORS, T-STATS, HUMIDITY SENSORS, ETC. AS PART OF SUBMITTAL PROCESS FOR A/E REVIEW PRIOR TO ROUGH-IN.

9. PROVIDE THROUGH FACE BALANCING FOR ALL DIFFUSERS, REGISTERS, AND GRILLES ABOVE INACCESSIBLE AREAS.

10. PROVIDE TURNING VANES IN ALL 90" DUCT ELBOWS.

11. INSTALL EXPOSED DUCTWORK AS HIGH AS POSSIBLE.

13. ALL DUCT/PIPE PENETRATIONS THROUGH FIRE RATED/SMOKE RATED PARTITIONS SHALL BE CAULKED AND SEALED TO MEET THE RATING REQUIRED. REFER TO LIFE SAFETY DRAWINGS FOR FIRE/SMOKE RATING REQUIREMENTS.

14. REFER TO ACHITECTURAL PLANS FOR SECURE WALL LOCATIONS. IN ADDITION TO THE MANBARS SHOWN ON PLAN PROVIDE MANBARS IN ALL DUCTS LARGER THEN 12"x12" PENETRATING SECURE WALLS.

15. PROVIDE CONDENSATE DRAIN FROM ALL DX EVAPORATOR COILS TO NEAREST MOP SINK OR MECHANICAL ROOM FLOOR DRAIN. PROVIDE CONDENSATE PUMP FOR WALL MOUNTED UNITS AND CONCEALED UNITS THAT CANNOT BE GRAVITY DRAINED TO TERMINATION LOCATION

KEYNOTES

Architect: Brinkley Sargent Wigintn Architects (972) 960-9970
Landscape: Kendall Landscape Architecture (214) 739-3226
Structural: L.A. Fuess Partners, Inc (214) 593-1118
MEP: M-E Engineers (214) 741-1589
Civil: KSA Engineers, Inc (903) 236-7700
Technology: M-E Engineers (303) 421-6656

BRINKLEY SARGENT WIGINTON ARCHITECTS

LONGVIEW POLICE DEPARTMENT

518 W. SOUTH ST. LONGVIEW, TEXAS 75601

History		
#	Date	Description

STATE OF TEXAS
LAUREN F. BERRY
117369
LICENSED
PROFESSIONAL ENGINEER
ME Engineers, Inc.
F-10231
08/19/2020

LEVEL 1 - MECHANICAL OVERALL PLAN

BID ISSUE

20513
08/19/2020
M210

8/14/2020 11:03:57 AM

C:\Revit Projects\2019\LPD_CENTRAL_M19_christopher.ruiz@2020.rvt

© 2020 Brinkley Sargent Wigginton Architects, Inc.

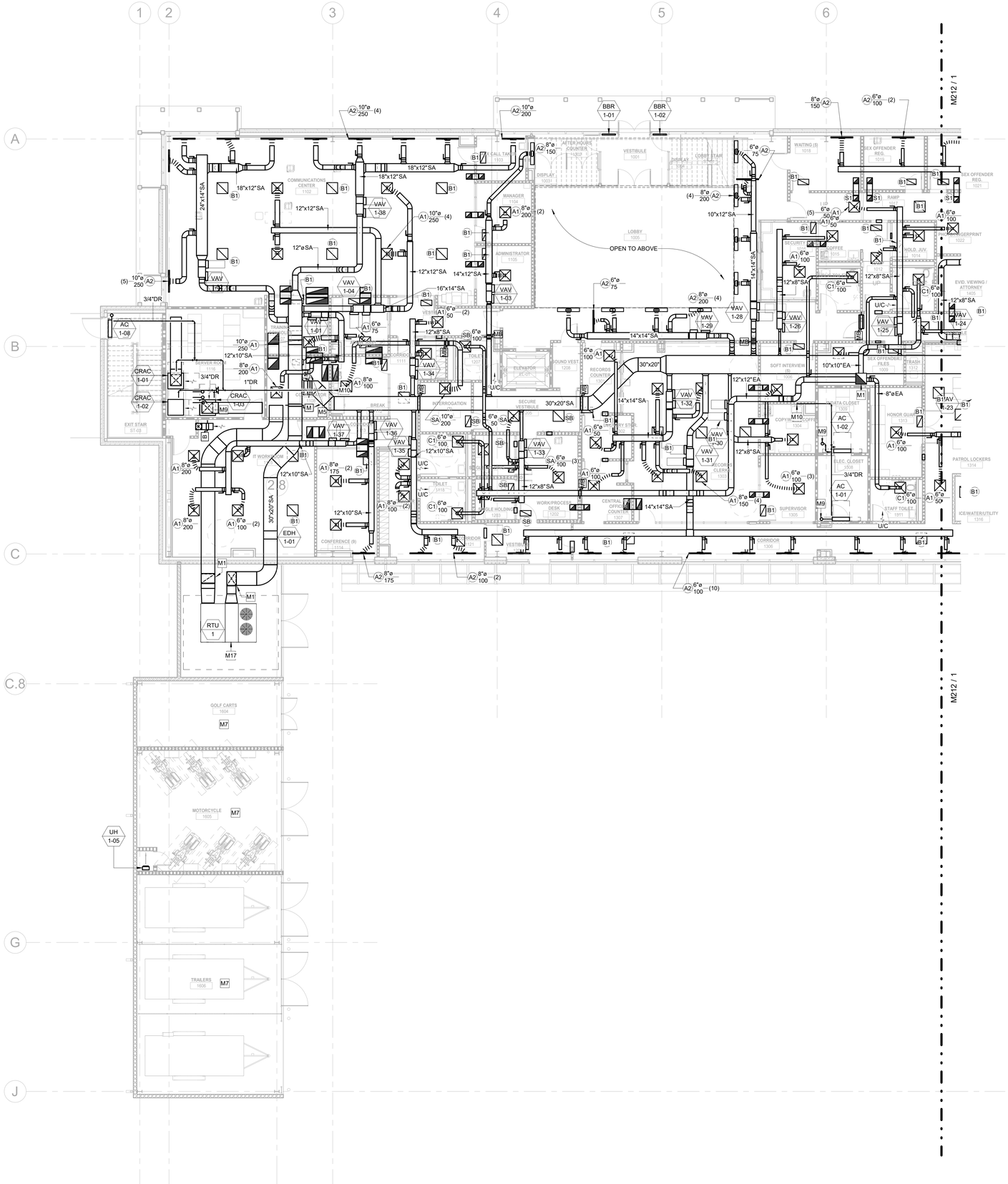

1 LEVEL 1 - MECHANICAL PLAN - WEST
1/8" = 1'-0"

GENERAL NOTES:

1. THE DRAWINGS ARE DIAGRAMMATIC IN NATURE. THE CONTRACTOR IS RESPONSIBLE FOR ALL OFFSETS, TRANSITIONS, ELBOWS, ETC. AS REQUIRED IN DUCTWORK, PIPING, SUPPORTS, ETC. TO COMPLETE THE WORK IN A CLEAN FUNCTIONAL INSTALLATION THAT IS FULLY COORDINATED WITH ALL OTHER TRADES. ANY PRICING EFFORT SHALL TAKE THESE FACTORS INTO ACCOUNT.

2. MAINTAIN CODE REQUIRED AREA OF SEPARATION FROM OUTSIDE AIR INTAKES TO TERMINATIONS OF EXHAUST, COMBUSTION AIR, PLUMBING VENTS, ETC.

3. COORDINATE EQUIPMENT HOUSEKEEPING PAD DIMENSIONS AND LAYOUT WITH THE GENERAL CONTRACTOR BASED ON FINAL EQUIPMENT SIZES.

4. PROVIDE MANUAL BALANCE DAMPERS IN ALL SUPPLY DUCT BRANCH TAPS DOWNSTREAM OF VAV BOXES.

5. PROVIDE MANUAL BALANCE DAMPERS IN ALL EXHAUST DUCT BRANCH TAPS.

6. PROVIDE TRANSFER "Z" BOOT DUCTS IN FULL HEIGHT WALLS WHERE A PLENUM RETURN SYSTEM IS UTILIZED. BOOTS SHALL BE SIZED TO MAINTAIN A MAXIMUM OF 400 FPM. PROVIDE A GRILLE FOR ALL TRANSFERS IN EXPOSED AREAS. RE: ARCH.

7. COORDINATE SPACE TEMPERATURE SENSORS AND THERMOSTAT LOCATIONS TO ALIGN VERTICALLY WITH LIGHT SWITCHES. PROVIDE COMBINATION TEMPERATURE AND CO SENSORS AT ALL LOATIONS WHERE TEMPERATURE SENSORS ARE SHOWN.

8. TEMPERATURE CONTROLS CONTRACTOR SHALL SUBMIT PLANS INDICATING ALL SPACE TEMPERATURE SENSORS, T-STATS, HUMIDITY SENSORS, ETC. AS PART OF SUBMITTAL PROCESS FOR A/E REVIEW PRIOR TO ROUGH-IN.

9. PROVIDE THROUGH FACE BALANCING FOR ALL DIFFUSERS, REGISTERS, AND GRILLES ABOVE INACCESSIBLE AREAS.

10. PROVIDE TURNING VANES IN ALL 90° DUCT ELBOWS.

11. INSTALL EXPOSED DUCTWORK AS HIGH AS POSSIBLE.

13. ALL DUCT/PIPE PENETRATIONS THROUGH FIRE RATED/SMOKE RATED PARTITIONS SHALL BE CAULKED AND SEALED TO MEET THE RATING REQUIRED. REFER TO LIFE SAFETY DRAWINGS FOR FIRE/SMOKE RATING REQUIREMENTS.

14. REFER TO ACHITECTURAL PLANS FOR SECURE WALL LOCATIONS. IN ADDITION TO THE MANBARS SHOWN ON PLAN PROVIDE MANBARS IN ALL DUCTS LARGER THEN 12"x12" PENETRATING SECURE WALLS.

15. PROVIDE CONDENSATE DRAIN FROM ALL DX EVAPORATOR COILS TO NEAREST MOP SINK OR MECHANICAL ROOM FLOOR DRAIN. PROVIDE CONDENSATE PUMP FOR WALL MOUNTED UNITS AND CONCEALED UNITS THAT CANNOT BE GRAVITY DRAINED TO TERMINATION LOCATION.

KEYNOTES

M1	DUCT UP.
M5	SYSTEM HEADED TOGETHER FOR BACKUP OPERATION.
M7	SPACE OPEN TO THE OUTDOORS. NO HEATING OR COOLING PROVIDED. SPACE IS NATURALLY VENTILATED.
M9	GENERIC REFRIGERANT PIPE ROUTE SHOWN. CONTRACTOR SHALL COORDINATE AND ROUTE REFRIGERANT PIPING WITHIN WALLS FROM INDOOR UNIT TO OUTDOOR UNIT.
M10	ROUTE CONDENSATE TO HUB DRAIN. PROVIDE AND COORDINATE HUB DRAIN.
M17	ROUTE CONDENSATE TO PRIMARY ROOF DRAIN. DO NOT TERMINATE AT OVERFLOW ROOF DRAIN.

Architect: Brinkley Sargent Wigginton Architects (972) 960-9970
Landscape: Kendall Landscape Architecture (214) 739-3226
Structural: L.A. Fuess Partners, Inc (214) 593-1118
MEP: M-E Engineers (214) 741-1589
Civil: KSA Engineers, Inc (903) 236-7700
Technology: M-E Engineers (303) 421-6656

BRINKLEY SARGENT WIGINTON ARCHITECTS

LONGVIEW POLICE DEPARTMENT

518 W. SOUTH ST. LONGVIEW, TEXAS 75601

History		
#	Date	Description

STATE OF TEXAS
LAUREN F. BERRY
117369
LICENSED
PROFESSIONAL ENGINEER

ME Engineers, Inc.
F-10231
08/19/2020

LEVEL 1 - MECHANICAL PLAN - WEST

20513
08/19/2020
M211

BID ISSUE

8/14/2020 11:54:02 AM

C:\Revit Projects\2019\URL_CENTRAL_M19_christopher.hoff@TCLA.rvt

© 2020 Brinkley Sargent Wigginton Architects, Inc.

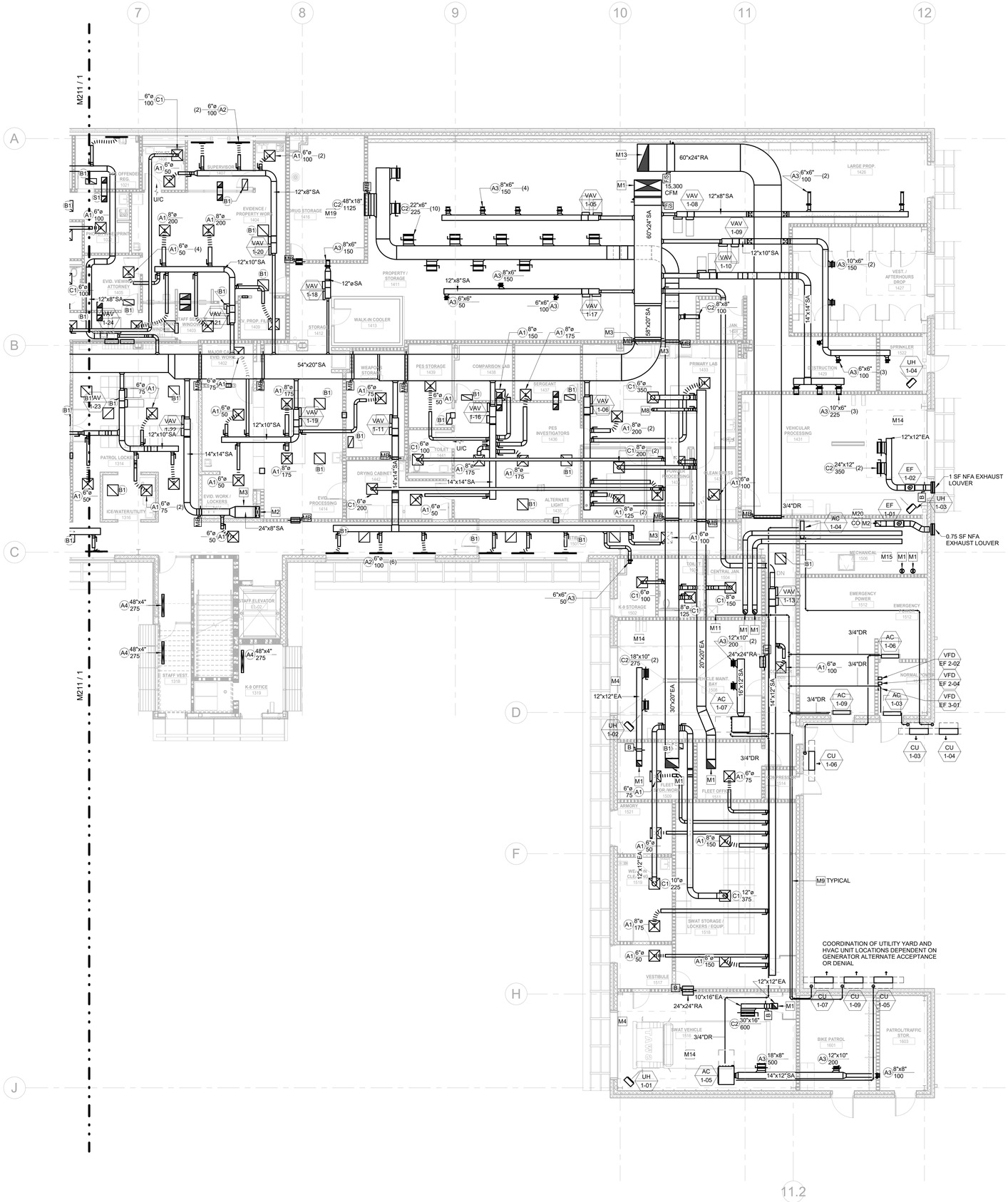

1 LEVEL 1 - MECHANICAL PLAN - EAST
1/8" = 1'-0"

GENERAL NOTES:

1. THE DRAWINGS ARE DIAGRAMMATIC IN NATURE. THE CONTRACTOR IS RESPONSIBLE FOR ALL OFFSETS, TRANSITIONS, ELBOWS, ETC. AS REQUIRED IN DUCTWORK, PIPING, SUPPORTS, ETC. TO COMPLETE THE WORK IN A CLEAN FUNCTIONAL INSTALLATION THAT IS FULLY COORDINATED WITH ALL OTHER TRADES. ANY PRICING EFFORT SHALL TAKE THESE FACTORS INTO ACCOUNT.

2. MAINTAIN CODE REQUIRED AREA OF SEPARATION FROM OUTSIDE AIR INTAKES TO TERMINATIONS OF EXHAUST, COMBUSTION AIR, PLUMBING VENTS, ETC.

3. COORDINATE EQUIPMENT HOUSEKEEPING PAD DIMENSIONS AND LAYOUT WITH THE GENERAL CONTRACTOR BASED ON FINAL EQUIPMENT SIZES.

4. PROVIDE MANUAL BALANCE DAMPERS IN ALL SUPPLY DUCT BRANCH TAPS DOWNSTREAM OF VAV BOXES.

5. PROVIDE MANUAL BALANCE DAMPERS IN ALL EXHAUST DUCT BRANCH TAPS.

6. PROVIDE TRANSFER "Z" BOOT DUCTS IN FULL HEIGHT WALLS WHERE A PLENUM RETURN SYSTEM IS UTILIZED. BOOTS SHALL BE SIZED TO MAINTAIN A MAXIMUM OF 400 FPM. PROVIDE A GRILLE FOR ALL TRANSFERS IN EXPOSED AREAS. RE: ARCH.

7. COORDINATE SPACE TEMPERATURE SENSORS AND THERMOSTAT LOCATIONS TO ALIGN VERTICALLY WITH LIGHT SWITCHES. PROVIDE COMBINATION TEMPERATURE AND CO SENSORS AT ALL LOATIONS WHERE TEMPERATURE SENSORS ARE SHOWN.

8. TEMPERATURE CONTROLS CONTRACTOR SHALL SUBMIT PLANS INDICATING ALL SPACE TEMPERATURE SENSORS, T-STATS, HUMIDITY SENSORS, ETC. AS PART OF SUBMITTAL PROCESS FOR A/E REVIEW PRIOR TO ROUGH-IN.

9. PROVIDE THROUGH FACE BALANCING FOR ALL DIFFUSERS, REGISTERS, AND GRILLES ABOVE INACCESSIBLE AREAS.

10. PROVIDE TURNING VANES IN ALL 90° DUCT ELBOWS.

11. INSTALL EXPOSED DUCTWORK AS HIGH AS POSSIBLE.

13. ALL DUCT/PIPE PENETRATIONS THROUGH FIRE RATED/SMOKE RATED PARTITIONS SHALL BE CAULKED AND SEALED TO MEET THE RATING REQUIRED. REFER TO LIFE SAFETY DRAWINGS FOR FIRE/SMOKE RATING REQUIREMENTS.

14. REFER TO ACHITECTURAL PLANS FOR SECURE WALL LOCATIONS. IN ADDITION TO THE MANBARS SHOWN ON PLAN PROVIDE MANBARS IN ALL DUCTS LARGER THEN 12"x12" PENETRATING SECURE WALLS.

15. PROVIDE CONDENSATE DRAIN FROM ALL DX EVAPORATOR COILS TO NEAREST MOP SINK OR MECHANICAL ROOM FLOOR DRAIN. PROVIDE CONDENSATE PUMP FOR WALL MOUNTED UNITS AND CONCEALED UNITS THAT CANNOT BE GRAVITY DRAINED TO TERMINATION LOCATION.

KEYNOTES

M1	DUCT UP.
M2	DUCT DOWN.
M3	VENTLESS HOOD.
M4	MOTORIZED DOOR INTERLOCKED WITH EXHAUST FAN.
M8	CONNECT TO SNORK VACUUM EXHAUST. BALANCE TO 400 CFM.
M9	GENERIC REFRIGERANT PIPE ROUTE SHOWN. CONTRACTOR SHALL COORDINATE AND ROUTE REFRIGERANT PIPING WITHIN WALLS FROM INDOOR UNIT TO OUTDOOR UNIT.
M11	ROUTE CONDENSATE TO MOP SINK. ROUTE CONDENSATE DOWN WALL AND TERMINATE 12" ABOVE BASE OR SINK.
M13	ARCHITECTURE TO PROVIDE CAP ON BOTTOM OF SHAFT. INSTALL VERTICAL FIRE/SMOKE DAMPERS IN WALLS.
M14	ALL MOTORIZED VEHICLE STORAGE AREAS TO BE PROVIDED WITH CO/NO SENSORS TO INITIATE EXHAUST AIR.
M15	WATER HEATER INTAKE AND FLUE. ROUTE FROM WATER HEATER TO ROOM. SIZE AND TERMINATE PER MANUFACTURERS RECOMMENDATION. IF CONCENTRIC VENT KITS ARE OPTIONAL THEN COORDINATE AND ROUTE AS REQUIRED.
M19	PROVIDE AIR PURIFICATION SYSTEM ATMOSAIR MODEL P2000 OR EQUAL. POWER FROM WALL RECEPTACLE.
M20	PROVIDE CO SENSOR TO ALARM BMS AND CLOSE GAS SOLENOID VALVE.

Architect: Brinkley Sargent Wigginton Architects (972) 960-9970
Landscape: Kendall Landscape Architecture (214) 739-3226
Structural: L.A. Fuess Partners, Inc (214) 593-1118
MEP: M-E Engineers (214) 741-1589
Civil: KSA Engineers, Inc (903) 236-7700
Technology: M-E Engineers (303) 421-6656

BRINKLEY SARGENT WIGINTON ARCHITECTS

LONGVIEW POLICE DEPARTMENT

518 W. SOUTH ST. LONGVIEW, TEXAS 75601

History

#	Date	Description

STATE OF TEXAS
LAUREN F. BERRY
117369
LICENSED PROFESSIONAL ENGINEER
ME Engineers, Inc.
F-10231
08/19/2020

LEVEL 1 - MECHANICAL PLAN - EAST

20513
08/19/2020
M212

BID ISSUE

8/14/2020 11:04:08 AM

C:\Revit Projects\2019\LPD_CENTRAL_MTG_christopher.sullivan.rvt

© 2020 Brinkley Sargent Wigginton Architects, Inc.

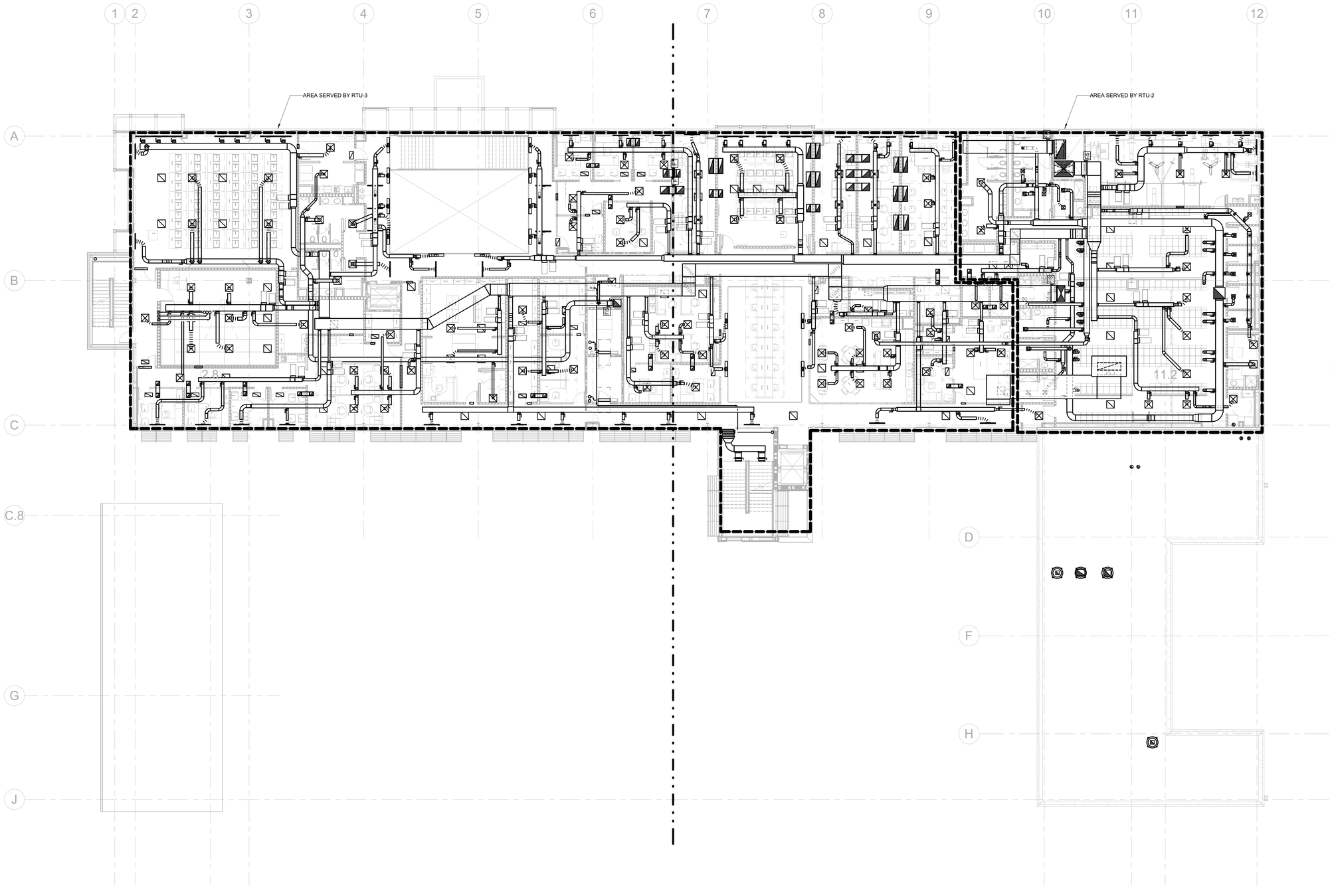

1 LEVEL 2 - MECHANICAL OVERALL PLAN
3/32" = 1'-0"

GENERAL NOTES:

1. THE DRAWINGS ARE DIAGRAMMATIC IN NATURE. THE CONTRACTOR IS RESPONSIBLE FOR ALL OFFSETS, TRANSITIONS, ELBOWS, ETC. AS REQUIRED IN DUCTWORK, PIPING, SUPPORTS, ETC. TO COMPLETE THE WORK IN A CLEAN FUNCTIONAL INSTALLATION THAT IS FULLY COORDINATED WITH ALL OTHER TRADES. ANY PRICING EFFORT SHALL TAKE THESE FACTORS INTO ACCOUNT.

2. MAINTAIN CODE REQUIRED AREA OF SEPARATION FROM OUTSIDE AIR INTAKES TO TERMINATIONS OF EXHAUST, COMBUSTION AIR, PLUMBING VENTS, ETC.

3. COORDINATE EQUIPMENT HOUSEKEEPING PAD DIMENSIONS AND LAYOUT WITH THE GENERAL CONTRACTOR BASED ON FINAL EQUIPMENT SIZES.

4. PROVIDE MANUAL BALANCE DAMPERS IN ALL SUPPLY DUCT BRANCH TAPS DOWNSTREAM OF VAV BOXES.

5. PROVIDE MANUAL BALANCE DAMPERS IN ALL EXHAUST DUCT BRANCH TAPS.

6. PROVIDE TRANSFER "Z" BOOT DUCTS IN FULL HEIGHT WALLS WHERE A PLENUM RETURN SYSTEM IS UTILIZED. BOOTS SHALL BE SIZED TO MAINTAIN A MAXIMUM OF 400 FPM. PROVIDE A GRILLE FOR ALL TRANSFERS IN EXPOSED AREAS. RE: ARCH.

7. COORDINATE SPACE TEMPERATURE SENSORS AND THERMOSTAT LOCATIONS TO ALIGN VERTICALLY WITH LIGHT SWITCHES. PROVIDE COMBINATION TEMPERATURE AND CO SENSORS AT ALL LOATIONS WHERE TEMPERATURE SENSORS ARE SHOWN.

8. TEMPERATURE CONTROLS CONTRACTOR SHALL SUBMIT PLANS INDICATING ALL SPACE TEMPERATURE SENSORS, T-STATS, HUMIDITY SENSORS, ETC. AS PART OF SUBMITTAL PROCESS FOR A/E REVIEW PRIOR TO ROUGH-IN.

9. PROVIDE THROUGH FACE BALANCING FOR ALL DIFFUSERS, REGISTERS, AND GRILLES ABOVE INACCESSIBLE AREAS.

10. PROVIDE TURNING VANES IN ALL 90° DUCT ELBOWS.

11. INSTALL EXPOSED DUCTWORK AS HIGH AS POSSIBLE.

13. ALL DUCT/PIPE PENETRATIONS THROUGH FIRE RATED/SMOKE RATED PARTITIONS SHALL BE CAULKED AND SEALED TO MEET THE RATING REQUIRED. REFER TO LIFE SAFETY DRAWINGS FOR FIRE/SMOKE RATING REQUIREMENTS.

14. REFER TO ACHITECTURAL PLANS FOR SECURE WALL LOCATIONS. IN ADDITION TO THE MANBARS SHOWN ON PLAN PROVIDE MANBARS IN ALL DUCTS LARGER THEN 12"x12" PENETRATING SECURE WALLS.

15. PROVIDE CONDENSATE DRAIN FROM ALL DX EVAPORATOR COILS TO NEAREST MOP SINK OR MECHANICAL ROOM FLOOR DRAIN. PROVIDE CONDENSATE PUMP FOR WALL MOUNTED UNITS AND CONCEALED UNITS THAT CANNOT BE GRAVITY DRAINED TO TERMINATION LOCATION

KEYNOTES

Architect: Brinkley Sargent Wigginton Architects (972) 960-9970
Landscape: Kendall Landscape Architecture (214) 739-3226
Structural: L.A. Fuess Partners, Inc (214) 593-1118
MEP: M-E Engineers (214) 741-1589
Civil: KSA Engineers, Inc (903) 236-7700
Technology: M-E Engineers (303) 421-6656

BRINKLEY SARGENT WIGINTON ARCHITECTS

LONGVIEW POLICE DEPARTMENT

518 W. SOUTH ST. LONGVIEW, TEXAS 75601

History

#	Date	Description

STATE OF TEXAS
LAUREN F. BERRY
117369
LICENSED
PROFESSIONAL ENGINEER
ME Engineers, Inc.
F-10231
08/19/2020

LEVEL 2 - MECHANICAL OVERALL PLAN

20513
08/19/2020

M220

BID ISSUE

8/14/2020 11:04:15 AM

E:\Revit Projects\2015\LPD_CENTRAL_M19_christopher.hoell@CLK.rvt

© 2020 Brinkley Sargent Wigginton Architects, Inc.

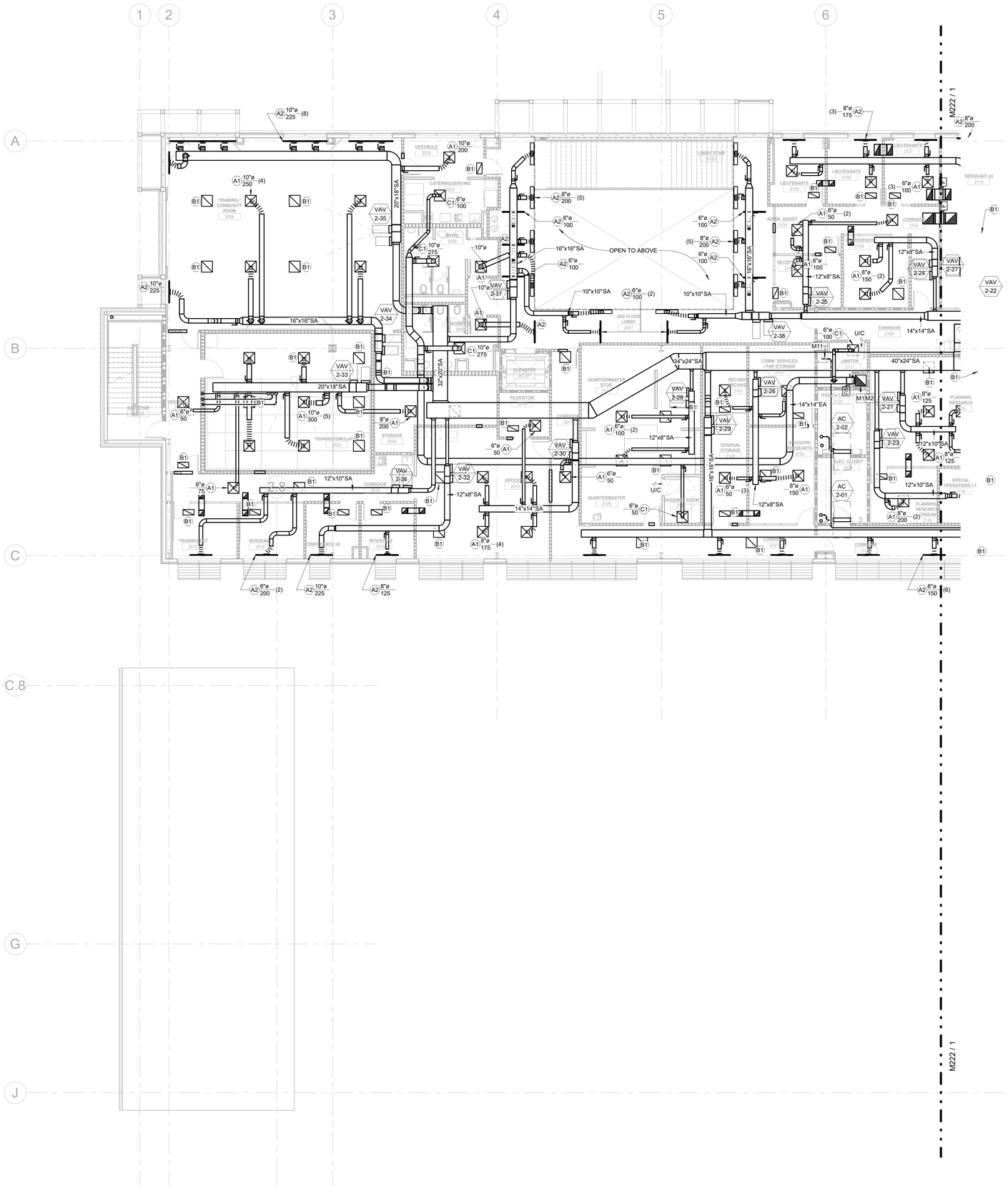

GENERAL NOTES:

1. THE DRAWINGS ARE DIAGRAMMATIC IN NATURE. THE CONTRACTOR IS RESPONSIBLE FOR ALL OFFSETS, TRANSITIONS, ELBOWS, ETC. AS REQUIRED IN DUCTWORK, PIPING, SUPPORTS, ETC. TO COMPLETE THE WORK IN A CLEAN FUNCTIONAL INSTALLATION THAT IS FULLY COORDINATED WITH ALL OTHER TRADES. ANY PRICING EFFORT SHALL TAKE THESE FACTORS INTO ACCOUNT.

2. MAINTAIN CODE REQUIRED AREA OF SEPARATION FROM OUTSIDE AIR INTAKES TO TERMINATIONS OF EXHAUST, COMBUSTION AIR, PLUMBING VENTS, ETC.

3. COORDINATE EQUIPMENT HOUSEKEEPING PAD DIMENSIONS AND LAYOUT WITH THE GENERAL CONTRACTOR BASED ON FINAL EQUIPMENT SIZES.

4. PROVIDE MANUAL BALANCE DAMPERS IN ALL SUPPLY DUCT BRANCH TAPS DOWNSTREAM OF VAV BOXES.

5. PROVIDE MANUAL BALANCE DAMPERS IN ALL EXHAUST DUCT BRANCH TAPS.

6. PROVIDE TRANSFER "Z" BOOT DUCTS IN FULL HEIGHT WALLS WHERE A PLENUM RETURN SYSTEM IS UTILIZED. BOOTS SHALL BE SIZED TO MAINTAIN A MAXIMUM OF 400 FPM. PROVIDE A GRILLE FOR ALL TRANSFERS IN EXPOSED AREAS. RE: ARCH.

7. COORDINATE SPACE TEMPERATURE SENSORS AND THERMOSTAT LOCATIONS TO ALIGN VERTICALLY WITH LIGHT SWITCHES. PROVIDE COMBINATION TEMPERATURE AND CO SENSORS AT ALL LOATIONS WHERE TEMPERATURE SENSORS ARE SHOWN.

8. TEMPERATURE CONTROLS CONTRACTOR SHALL SUBMIT PLANS INDICATING ALL SPACE TEMPERATURE SENSORS, T-STATS, HUMIDITY SENSORS, ETC. AS PART OF SUBMITTAL PROCESS FOR A/E REVIEW PRIOR TO ROUGH-IN.

9. PROVIDE THROUGH FACE BALANCING FOR ALL DIFFUSERS, REGISTERS, AND GRILLES ABOVE INACCESSIBLE AREAS.

10. PROVIDE TURNING VANES IN ALL 90" DUCT ELBOWS.

11. INSTALL EXPOSED DUCTWORK AS HIGH AS POSSIBLE.

13. ALL DUCT/PIPE PENETRATIONS THROUGH FIRE RATED/SMOKE RATED PARTITIONS SHALL BE CAULKED AND SEALED TO MEET THE RATING REQUIRED. REFER TO LIFE SAFETY DRAWINGS FOR FIRE/SMOKE RATING REQUIREMENTS.

14. REFER TO ACHITECTURAL PLANS FOR SECURE WALL LOCATIONS. IN ADDITION TO THE MANBARS SHOWN ON PLAN PROVIDE MANBARS IN ALL DUCTS LARGER THEN 12"x12" PENETRATING SECURE WALLS.

15. PROVIDE CONDENSATE DRAIN FROM ALL DX EVAPORATOR COILS TO NEAREST MOP SINK OR MECHANICAL ROOM FLOOR DRAIN. PROVIDE CONDENSATE PUMP FOR WALL MOUNTED UNITS AND CONCEALED UNITS THAT CANNOT BE GRAVITY DRAINED TO TERMINATION LOCATION

KEYNOTES

M1	DUCT UP.
M2	DUCT DOWN.
M11	ROUTE CONDENSATE TO MOP SINK. ROUTE CONDENSATE DOWN WALL AND TERMINATE 12" ABOVE BASE OR SINK.

1 LEVEL 2 - MECHANICAL PLAN - WEST
1/8" = 1'-0"

BRINKLEY SARGENT WIGINTON ARCHITECTS

Architect: Brinkley Sargent Wigginton Architects (972) 960-9970
Landscape: Kendall Landscape Architecture (214) 739-3226
Structural: L.A. Fuess Partners, Inc (214) 593-1118
MEP: M-E Engineers (214) 741-1589
Civil: KSA Engineers, Inc (903) 236-7700
Technology: M-E Engineers (303) 421-6656

LONGVIEW POLICE DEPARTMENT

518 W. SOUTH ST. LONGVIEW, TEXAS 75601

History		
#	Date	Description

STATE OF TEXAS
LAUREN F. BERRY
117369
LICENSED
PROFESSIONAL ENGINEER
ME Engineers, Inc.
F-10231
08/19/2020

LEVEL 2 - MECHANICAL PLAN - WEST

20513
08/19/2020
M221

BID ISSUE

8/14/2020 11:54:20 AM

C:\Revit Projects\2019\URL_CENTRAL_M19_christopher.hoff@TCLA.rvt

© 2020 Brinkley Sargent Wigginton Architects, Inc.

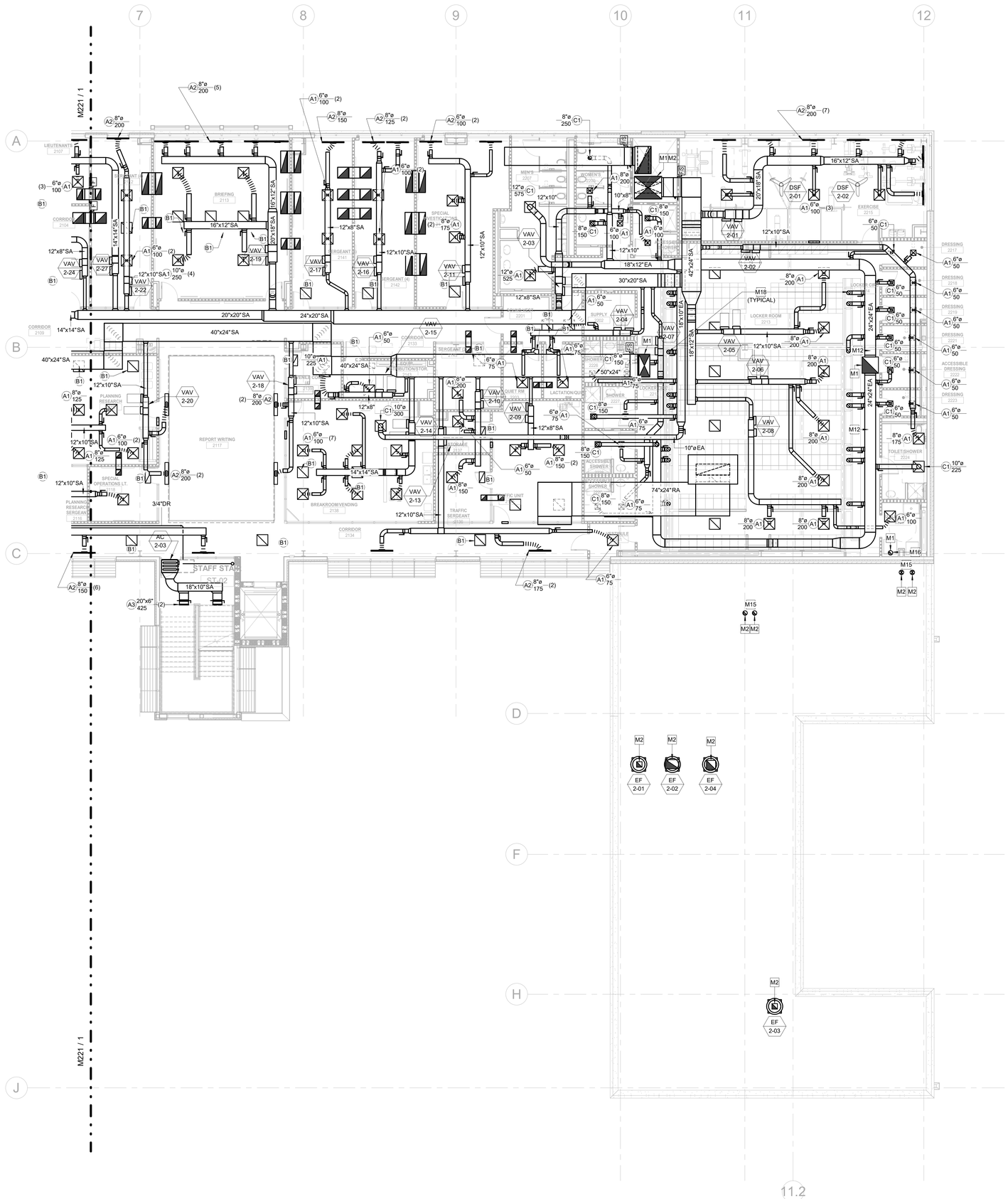

1 LEVEL 2 - MECHANICAL PLAN - EAST
1/8" = 1'-0"

GENERAL NOTES:

1. THE DRAWINGS ARE DIAGRAMMATIC IN NATURE. THE CONTRACTOR IS RESPONSIBLE FOR ALL OFFSETS, TRANSITIONS, ELBOWS, ETC. AS REQUIRED IN DUCTWORK, PIPING, SUPPORTS, ETC. TO COMPLETE THE WORK IN A CLEAN FUNCTIONAL INSTALLATION THAT IS FULLY COORDINATED WITH ALL OTHER TRADES. ANY PRICING EFFORT SHALL TAKE THESE FACTORS INTO ACCOUNT.

2. MAINTAIN CODE REQUIRED AREA OF SEPARATION FROM OUTSIDE AIR INTAKES TO TERMINATIONS OF EXHAUST, COMBUSTION AIR, PLUMBING VENTS, ETC.

3. COORDINATE EQUIPMENT HOUSEKEEPING PAD DIMENSIONS AND LAYOUT WITH THE GENERAL CONTRACTOR BASED ON FINAL EQUIPMENT SIZES.

4. PROVIDE MANUAL BALANCE DAMPERS IN ALL SUPPLY DUCT BRANCH TAPS DOWNSTREAM OF VAV BOXES.

5. PROVIDE MANUAL BALANCE DAMPERS IN ALL EXHAUST DUCT BRANCH TAPS.

6. PROVIDE TRANSFER "Z" BOOT DUCTS IN FULL HEIGHT WALLS WHERE A PLENUM RETURN SYSTEM IS UTILIZED. BOOTS SHALL BE SIZED TO MAINTAIN A MAXIMUM OF 400 FPM. PROVIDE A GRILLE FOR ALL TRANSFERS IN EXPOSED AREAS. RE: ARCH.

7. COORDINATE SPACE TEMPERATURE SENSORS AND THERMOSTAT LOCATIONS TO ALIGN VERTICALLY WITH LIGHT SWITCHES. PROVIDE COMBINATION TEMPERATURE AND CO SENSORS AT ALL LOATIONS WHERE TEMPERATURE SENSORS ARE SHOWN.

8. TEMPERATURE CONTROLS CONTRACTOR SHALL SUBMIT PLANS INDICATING ALL SPACE TEMPERATURE SENSORS, T-STATS, HUMIDITY SENSORS, ETC. AS PART OF SUBMITTAL PROCESS FOR A/E REVIEW PRIOR TO ROUGH-IN.

9. PROVIDE THROUGH FACE BALANCING FOR ALL DIFFUSERS, REGISTERS, AND GRILLES ABOVE INACCESSIBLE AREAS.

10. PROVIDE TURNING VANES IN ALL 90° DUCT ELBOWS.

11. INSTALL EXPOSED DUCTWORK AS HIGH AS POSSIBLE.

13. ALL DUCT/PIPE PENETRATIONS THROUGH FIRE RATED/SMOKE RATED PARTITIONS SHALL BE CAULKED AND SEALED TO MEET THE RATING REQUIRED. REFER TO LIFE SAFETY DRAWINGS FOR FIRE/SMOKE RATING REQUIREMENTS.

14. REFER TO ACHITECTURAL PLANS FOR SECURE WALL LOCATIONS. IN ADDITION TO THE MANBARS SHOWN ON PLAN PROVIDE MANBARS IN ALL DUCTS LARGER THEN 12"x12" PENETRATING SECURE WALLS.

15. PROVIDE CONDENSATE DRAIN FROM ALL DX EVAPORATOR COILS TO NEAREST MOP SINK OR MECHANICAL ROOM FLOOR DRAIN. PROVIDE CONDENSATE PUMP FOR WALL MOUNTED UNITS AND CONCEALED UNITS THAT CANNOT BE GRAVITY DRAINED TO TERMINATION LOCATION

KEYNOTES

M1	DUCT UP.
M2	DUCT DOWN.
M12	PROVIDE SLOPED ALUMINUM DUCTWORK AND ALUMINUM DIFFUSERS IN LOCKER AREAS. REFER TO SPECIFICATIONS FOR MORE INFORMATION.
M15	WATER HEATER INTAKE AND FLUE. ROUTE FROM WATER HEATER TO ROOM. SIZE AND TERMINATE PER MANUFACTURERS RECOMMENDATION. IF CONCENTRIC VENT KITS ARE OPTIONAL THEN COORDINATE AND ROUTE AS REQUIRED.
M16	DRYER VENT. ROUTE FROM DRYER TO ROOF. SIZE AND TERMINATE PER MANUFACTURERS RECOMMENDATION.
M18	AIR PULLED THROUGH LOCKERS DOORS FOR VENTILATION LOCKERS. COORDINATE WITH LOCKER MANUFACTURER AND ARCHITECTURAL DETAILS. BALANCE EACH DUCT TO 162.5 CFM.

BRINKLEY SARGENT WIGINTON ARCHITECTS

Architect: Brinkley Sargent Wigginton Architects (972) 960-9970
Landscape: Kendall Landscape Architecture (214) 739-3226
Structural: L.A. Fuess Partners, Inc (214) 593-1118
MEP: M-E Engineers (214) 741-1589
Civil: KSA Engineers, Inc (903) 236-7700
Technology: M-E Engineers (303) 421-6656

LONGVIEW POLICE DEPARTMENT

518 W. SOUTH ST. LONGVIEW, TEXAS 75601

History		
#	Date	Description

STATE OF TEXAS
LAUREN F. BERRY
117369
LICENSED PROFESSIONAL ENGINEER
ME Engineers, Inc.
F-10231
08/19/2020

LEVEL 2 - MECHANICAL PLAN - EAST

BID ISSUE

20513
08/19/2020
M222

8/14/2020 11:24:26 AM

C:\Revit Projects\2015\LRL_CENTRAL_MYB_christopher.hoff2CLM.rvt

© 2020 Brinkley Sargent Wigginton Architects, Inc.

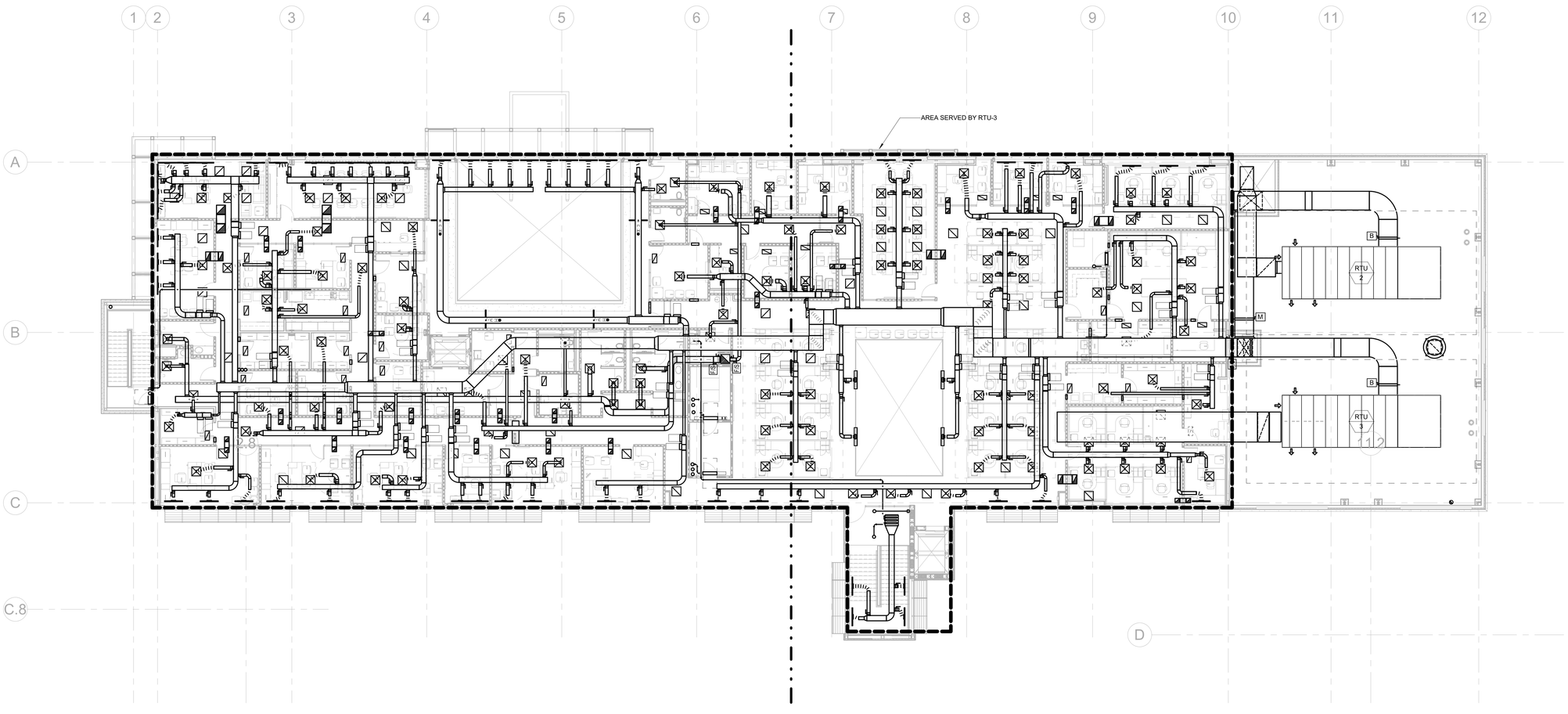

1 LEVEL 3 - MECHANICAL OVERALL PLAN
3/32" = 1'-0"

GENERAL NOTES:

1. THE DRAWINGS ARE DIAGRAMMATIC IN NATURE. THE CONTRACTOR IS RESPONSIBLE FOR ALL OFFSETS, TRANSITIONS, ELBOWS, ETC. AS REQUIRED IN DUCTWORK, PIPING, SUPPORTS, ETC. TO COMPLETE THE WORK IN A CLEAN FUNCTIONAL INSTALLATION THAT IS FULLY COORDINATED WITH ALL OTHER TRADES. ANY PRICING EFFORT SHALL TAKE THESE FACTORS INTO ACCOUNT.

2. MAINTAIN CODE REQUIRED AREA OF SEPARATION FROM OUTSIDE AIR INTAKES TO TERMINATIONS OF EXHAUST, COMBUSTION AIR, PLUMBING VENTS, ETC.

3. COORDINATE EQUIPMENT HOUSEKEEPING PAD DIMENSIONS AND LAYOUT WITH THE GENERAL CONTRACTOR BASED ON FINAL EQUIPMENT SIZES.

4. PROVIDE MANUAL BALANCE DAMPERS IN ALL SUPPLY DUCT BRANCH TAPS DOWNSTREAM OF VAV BOXES.

5. PROVIDE MANUAL BALANCE DAMPERS IN ALL EXHAUST DUCT BRANCH TAPS.

6. PROVIDE TRANSFER "Z" BOOT DUCTS IN FULL HEIGHT WALLS WHERE A PLENUM RETURN SYSTEM IS UTILIZED. BOOTS SHALL BE SIZED TO MAINTAIN A MAXIMUM OF 400 FPM. PROVIDE A GRILLE FOR ALL TRANSFERS IN EXPOSED AREAS. RE: ARCH.

7. COORDINATE SPACE TEMPERATURE SENSORS AND THERMOSTAT LOCATIONS TO ALIGN VERTICALLY WITH LIGHT SWITCHES. PROVIDE COMBINATION TEMPERATURE AND CO SENSORS AT ALL LOATIONS WHERE TEMPERATURE SENSORS ARE SHOWN.

8. TEMPERATURE CONTROLS CONTRACTOR SHALL SUBMIT PLANS INDICATING ALL SPACE TEMPERATURE SENSORS, T-STATS, HUMIDITY SENSORS, ETC. AS PART OF SUBMITTAL PROCESS FOR A/E REVIEW PRIOR TO ROUGH-IN.

9. PROVIDE THROUGH FACE BALANCING FOR ALL DIFFUSERS, REGISTERS, AND GRILLES ABOVE INACCESSIBLE AREAS.

10. PROVIDE TURNING VANES IN ALL 90° DUCT ELBOWS.

11. INSTALL EXPOSED DUCTWORK AS HIGH AS POSSIBLE.

13. ALL DUCT/PIPE PENETRATIONS THROUGH FIRE RATED/SMOKE RATED PARTITIONS SHALL BE CAULKED AND SEALED TO MEET THE RATING REQUIRED. REFER TO LIFE SAFETY DRAWINGS FOR FIRE/SMOKE RATING REQUIREMENTS.

14. REFER TO ACHITECTURAL PLANS FOR SECURE WALL LOCATIONS. IN ADDITION TO THE MANBARS SHOWN ON PLAN PROVIDE MANBARS IN ALL DUCTS LARGER THEN 12"x12" PENETRATING SECURE WALLS.

15. PROVIDE CONDENSATE DRAIN FROM ALL DX EVAPORATOR COILS TO NEAREST MOP SINK OR MECHANICAL ROOM FLOOR DRAIN. PROVIDE CONDENSATE PUMP FOR WALL MOUNTED UNITS AND CONCEALED UNITS THAT CANNOT BE GRAVITY DRAINED TO TERMINATION LOCATION

KEYNOTES

Architect: Brinkley Sargent Wigginton Architects (972) 960-9970
Landscape: Kendall Landscape Architecture (214) 739-3226
Structural: L.A. Fuess Partners, Inc (214) 593-1118
MEP: M-E Engineers (214) 741-1589
Civil: KSA Engineers, Inc (903) 236-7700
Technology: M-E Engineers (303) 421-6656

BRINKLEY SARGENT WIGINTON ARCHITECTS

LONGVIEW POLICE DEPARTMENT

518 W. SOUTH ST. LONGVIEW, TEXAS 75601

History		
#	Date	Description

STATE OF TEXAS
LAUREN F. BERRY
117369
LICENSED
PROFESSIONAL ENGINEER

ME Engineers, Inc.
F-10231
08/19/2020

LEVEL 3 - MECHANICAL OVERALL PLAN

20513
08/19/2020

M230

BID ISSUE

8/14/2020 11:04:31 AM

C:\Revit Projects\2019\LPD_CENTRAL_MEP_christopher.ruiz@22.rvt

© 2020 Brinkley Sargent Wigginton Architects, Inc.

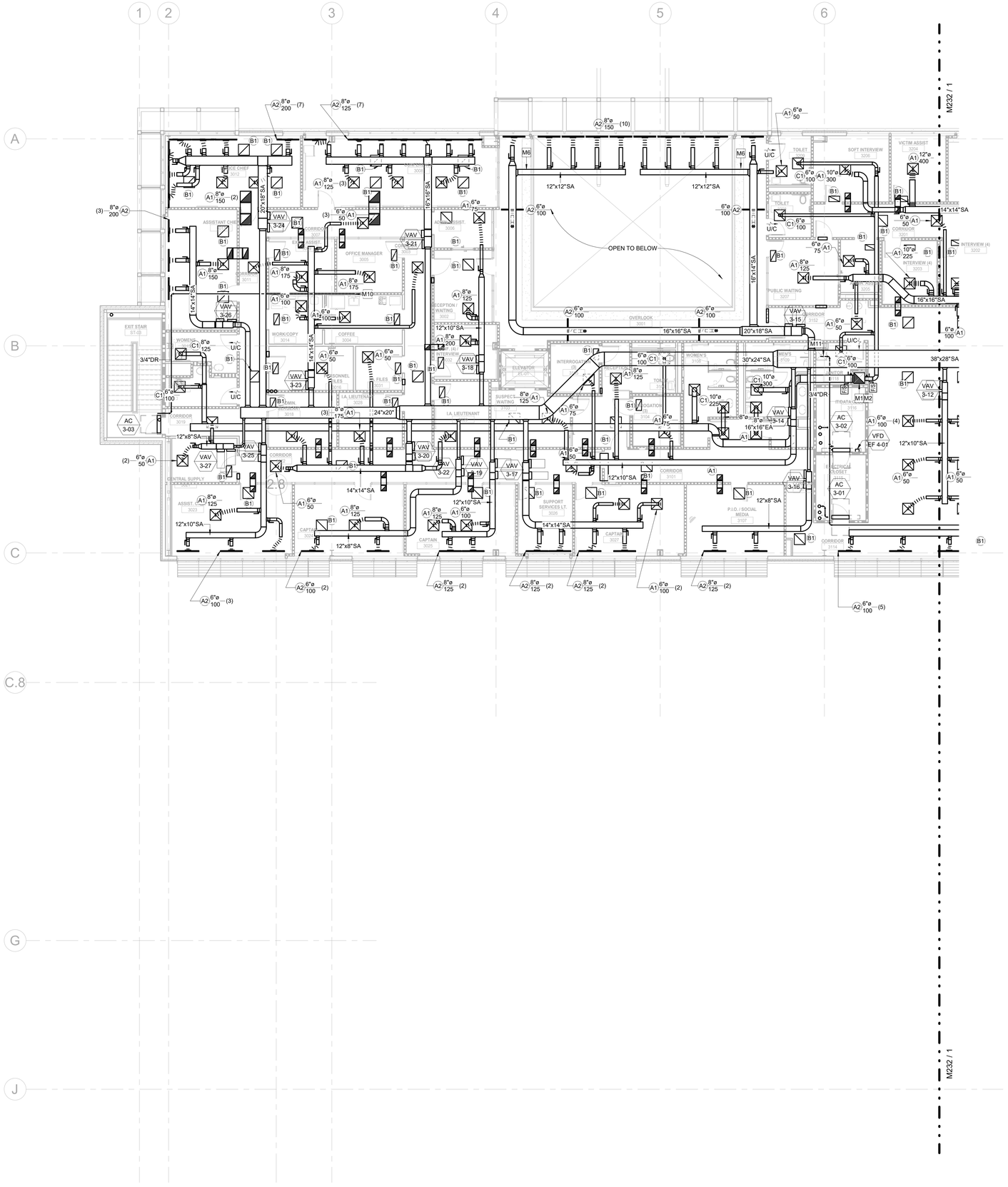

1 LEVEL 3 - MECHANICAL PLAN - WEST
1/8" = 1'-0"

GENERAL NOTES:

1. THE DRAWINGS ARE DIAGRAMMATIC IN NATURE. THE CONTRACTOR IS RESPONSIBLE FOR ALL OFFSETS, TRANSITIONS, ELBOWS, ETC. AS REQUIRED IN DUCTWORK, PIPING, SUPPORTS, ETC. TO COMPLETE THE WORK IN A CLEAN FUNCTIONAL INSTALLATION THAT IS FULLY COORDINATED WITH ALL OTHER TRADES. ANY PRICING EFFORT SHALL TAKE THESE FACTORS INTO ACCOUNT.

2. MAINTAIN CODE REQUIRED AREA OF SEPARATION FROM OUTSIDE AIR INTAKES TO TERMINATIONS OF EXHAUST, COMBUSTION AIR, PLUMBING VENTS, ETC.

3. COORDINATE EQUIPMENT HOUSEKEEPING PAD DIMENSIONS AND LAYOUT WITH THE GENERAL CONTRACTOR BASED ON FINAL EQUIPMENT SIZES.

4. PROVIDE MANUAL BALANCE DAMPERS IN ALL SUPPLY DUCT BRANCH TAPS DOWNSTREAM OF VAV BOXES.

5. PROVIDE MANUAL BALANCE DAMPERS IN ALL EXHAUST DUCT BRANCH TAPS.

6. PROVIDE TRANSFER "Z" BOOT DUCTS IN FULL HEIGHT WALLS WHERE A PLENUM RETURN SYSTEM IS UTILIZED. BOOTS SHALL BE SIZED TO MAINTAIN A MAXIMUM OF 400 FPM. PROVIDE A GRILLE FOR ALL TRANSFERS IN EXPOSED AREAS. RE: ARCH.

7. COORDINATE SPACE TEMPERATURE SENSORS AND THERMOSTAT LOCATIONS TO ALIGN VERTICALLY WITH LIGHT SWITCHES. PROVIDE COMBINATION TEMPERATURE AND CO SENSORS AT ALL LOATIONS WHERE TEMPERATURE SENSORS ARE SHOWN.

8. TEMPERATURE CONTROLS CONTRACTOR SHALL SUBMIT PLANS INDICATING ALL SPACE TEMPERATURE SENSORS, T-STATS, HUMIDITY SENSORS, ETC. AS PART OF SUBMITTAL PROCESS FOR A/E REVIEW PRIOR TO ROUGH-IN.

9. PROVIDE THROUGH FACE BALANCING FOR ALL DIFFUSERS, REGISTERS, AND GRILLES ABOVE INACCESSIBLE AREAS.

10. PROVIDE TURNING VANES IN ALL 90° DUCT ELBOWS.

11. INSTALL EXPOSED DUCTWORK AS HIGH AS POSSIBLE.

13. ALL DUCT/PIPE PENETRATIONS THROUGH FIRE RATED/SMOKE RATED PARTITIONS SHALL BE CAULKED AND SEALED TO MEET THE RATING REQUIRED. REFER TO LIFE SAFETY DRAWINGS FOR FIRE/SMOKE RATING REQUIREMENTS.

14. REFER TO ACHITECTURAL PLANS FOR SECURE WALL LOCATIONS. IN ADDITION TO THE MANBARS SHOWN ON PLAN PROVIDE MANBARS IN ALL DUCTS LARGER THEN 12"x12" PENETRATING SECURE WALLS.

15. PROVIDE CONDENSATE DRAIN FROM ALL DX EVAPORATOR COILS TO NEAREST MOP SINK OR MECHANICAL ROOM FLOOR DRAIN. PROVIDE CONDENSATE PUMP FOR WALL MOUNTED UNITS AND CONCEALED UNITS THAT CANNOT BE GRAVITY DRAINED TO TERMINATION LOCATION

KEYNOTES

M1	DUCT UP.
M2	DUCT DOWN.
M6	COORDINATE DUCT CROSSING LOCATION WITH STRUCTURAL SUPPORT FOR LVL 3 LOBBY SMOKE CURTAIN.
M10	ROUTE CONDENSATE TO HUB DRAIN. PROVIDE AND COORDINATE HUB DRAIN.
M11	ROUTE CONDENSATE TO MOP SINK. ROUTE CONDENSATE DOWN WALL AND TERMINATE 12" ABOVE BASE OR SINK.

BRINKLEY SARGENT WIGINTON ARCHITECTS

Architect: Brinkley Sargent Wigginton Architects (972) 960-9970
Landscape: Kendall Landscape Architecture (214) 739-3226
Structural: L.A. Fuess Partners, Inc (214) 593-1118
MEP: M-E Engineers (214) 741-1589
Civil: KSA Engineers, Inc (903) 236-7700
Technology: M-E Engineers (303) 421-6656

LONGVIEW POLICE DEPARTMENT

518 W. SOUTH ST. LONGVIEW, TEXAS 75601

History		
#	Date	Description

STATE OF TEXAS
LAUREN F. BERRY
117369
LICENSED
PROFESSIONAL ENGINEER

ME Engineers, Inc.
F-10231
08/19/2020

LEVEL 3 - MECHANICAL PLAN - WEST

BID ISSUE

20513
08/19/2020
M231

8/19/2020 11:04:36 AM

E:\Revit Projects\2015\LPD_CENTRAL_M19_christopher.hoell@CLK.rvt

© 2020 Brinkley Sargent Wigginton Architects, Inc.

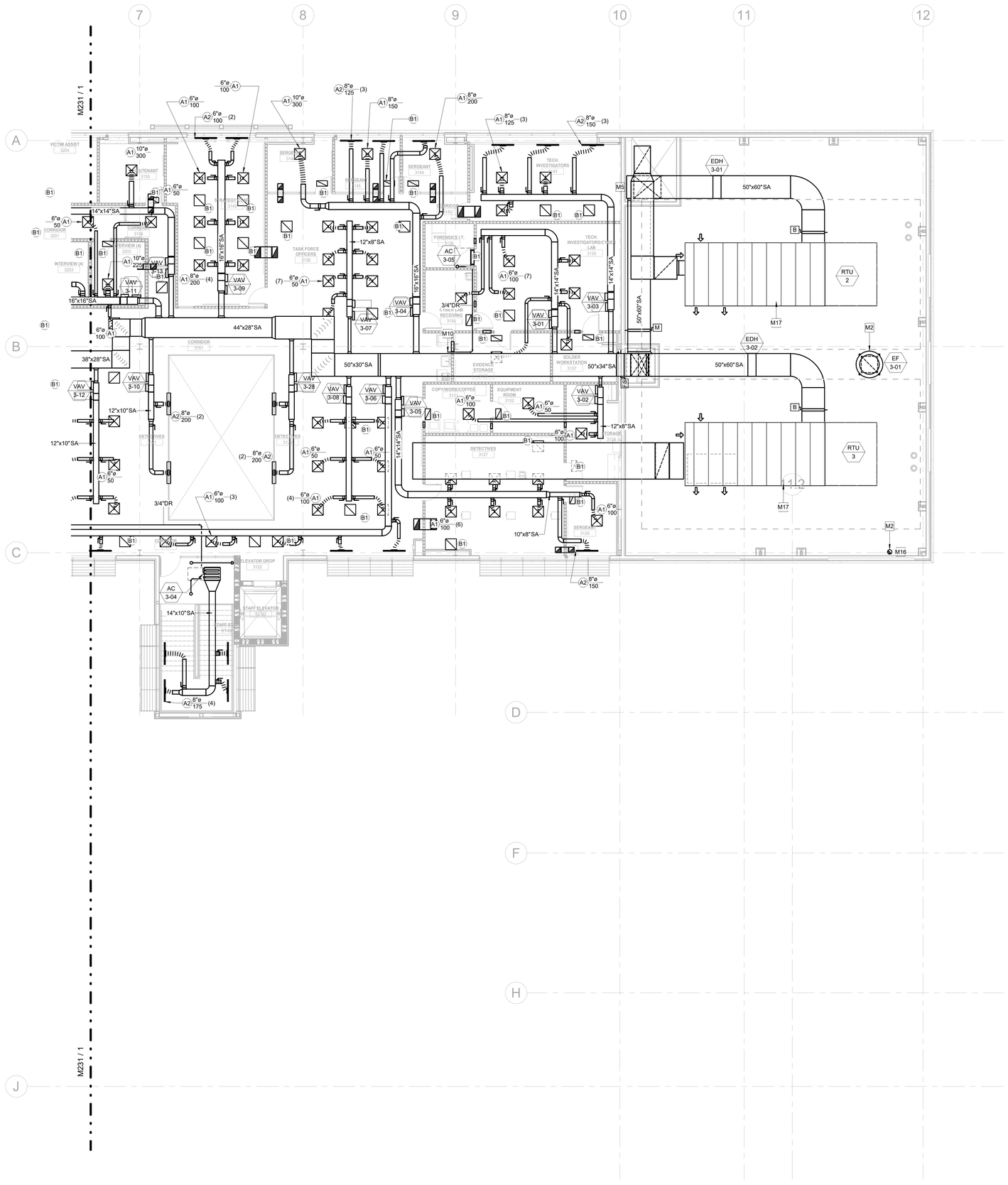

1 LEVEL 3 - MECHANICAL PLAN - EAST
1/8" = 1'-0"

GENERAL NOTES:

1. THE DRAWINGS ARE DIAGRAMMATIC IN NATURE. THE CONTRACTOR IS RESPONSIBLE FOR ALL OFFSETS, TRANSITIONS, ELBOWS, ETC. AS REQUIRED IN DUCTWORK, PIPING, SUPPORTS, ETC. TO COMPLETE THE WORK IN A CLEAN FUNCTIONAL INSTALLATION THAT IS FULLY COORDINATED WITH ALL OTHER TRADES. ANY PRICING EFFORT SHALL TAKE THESE FACTORS INTO ACCOUNT.

2. MAINTAIN CODE REQUIRED AREA OF SEPARATION FROM OUTSIDE AIR INTAKES TO TERMINATIONS OF EXHAUST, COMBUSTION AIR, PLUMBING VENTS, ETC.

3. COORDINATE EQUIPMENT HOUSEKEEPING PAD DIMENSIONS AND LAYOUT WITH THE GENERAL CONTRACTOR BASED ON FINAL EQUIPMENT SIZES.

4. PROVIDE MANUAL BALANCE DAMPERS IN ALL SUPPLY DUCT BRANCH TAPS DOWNSTREAM OF VAV BOXES.

5. PROVIDE MANUAL BALANCE DAMPERS IN ALL EXHAUST DUCT BRANCH TAPS.

6. PROVIDE TRANSFER "Z" BOOT DUCTS IN FULL HEIGHT WALLS WHERE A PLENUM RETURN SYSTEM IS UTILIZED. BOOTS SHALL BE SIZED TO MAINTAIN A MAXIMUM OF 400 FPM. PROVIDE A GRILLE FOR ALL TRANSFERS IN EXPOSED AREAS. RE: ARCH.

7. COORDINATE SPACE TEMPERATURE SENSORS AND THERMOSTAT LOCATIONS TO ALIGN VERTICALLY WITH LIGHT SWITCHES. PROVIDE COMBINATION TEMPERATURE AND CO SENSORS AT ALL LOATIONS WHERE TEMPERATURE SENSORS ARE SHOWN.

8. TEMPERATURE CONTROLS CONTRACTOR SHALL SUBMIT PLANS INDICATING ALL SPACE TEMPERATURE SENSORS, T-STATS, HUMIDITY SENSORS, ETC. AS PART OF SUBMITTAL PROCESS FOR A/E REVIEW PRIOR TO ROUGH-IN.

9. PROVIDE THROUGH FACE BALANCING FOR ALL DIFFUSERS, REGISTERS, AND GRILLES ABOVE INACCESSIBLE AREAS.

10. PROVIDE TURNING VANES IN ALL 90" DUCT ELBOWS.

11. INSTALL EXPOSED DUCTWORK AS HIGH AS POSSIBLE.

13. ALL DUCT/PIPE PENETRATIONS THROUGH FIRE RATED/SMOKE RATED PARTITIONS SHALL BE CAULKED AND SEALED TO MEET THE RATING REQUIRED. REFER TO LIFE SAFETY DRAWINGS FOR FIRE/SMOKE RATING REQUIREMENTS.

14. REFER TO ACHITECTURAL PLANS FOR SECURE WALL LOCATIONS. IN ADDITION TO THE MANBARS SHOWN ON PLAN PROVIDE MANBARS IN ALL DUCTS LARGER THEN 12"x12" PENETRATING SECURE WALLS.

15. PROVIDE CONDENSATE DRAIN FROM ALL DX EVAPORATOR COILS TO NEAREST MOP SINK OR MECHANICAL ROOM FLOOR DRAIN. PROVIDE CONDENSATE PUMP FOR WALL MOUNTED UNITS AND CONCEALED UNITS THAT CANNOT BE GRAVITY DRAINED TO TERMINATION LOCATION

KEYNOTES

M2	DUCT DOWN.
M5	SYSTEM HEADED TOGETHER FOR BACKUP OPERATION.
M10	ROUTE CONDENSATE TO HUB DRAIN. PROVIDE AND COORDINATE HUB DRAIN.
M16	DRYER VENT. ROUTE FROM DRYER TO ROOF. SIZE AND TERMINATE PER MANUFACTURERS RECOMMENDATION.
M17	ROUTE CONDENSATE TO PRIMARY ROOF DRAIN. DO NOT TERMINATE AT OVERFLOW ROOF DRAIN.

Architect: Brinkley Sargent Wigginton Architects (972) 960-9970
Landscape: Kendall Landscape Architecture (214) 739-3226
Structural: L.A. Fuess Partners, Inc (214) 593-1118
MEP: M-E Engineers (214) 741-1589
Civil: KSA Engineers, Inc (903) 236-7700
Technology: M-E Engineers (303) 421-6656

BRINKLEY SARGENT WIGINTON ARCHITECTS

LONGVIEW POLICE DEPARTMENT

518 W. SOUTH ST. LONGVIEW, TEXAS 75601

History		
#	Date	Description

STATE OF TEXAS
LAUREN F. BERRY
117369
LICENSED PROFESSIONAL ENGINEER
ME Engineers, Inc.
F-10231
08/19/2020

LEVEL 3 - MECHANICAL PLAN - EAST

BID ISSUE

20513
08/19/2020
M232

8/19/2020 11:04:41 AM

E:\Revit Projects\2015\LPD_CENTRAL_M1B_christopher.hoell@CLK.rvt

© 2020 Brinkley Sargent Wigginton Architects, Inc.

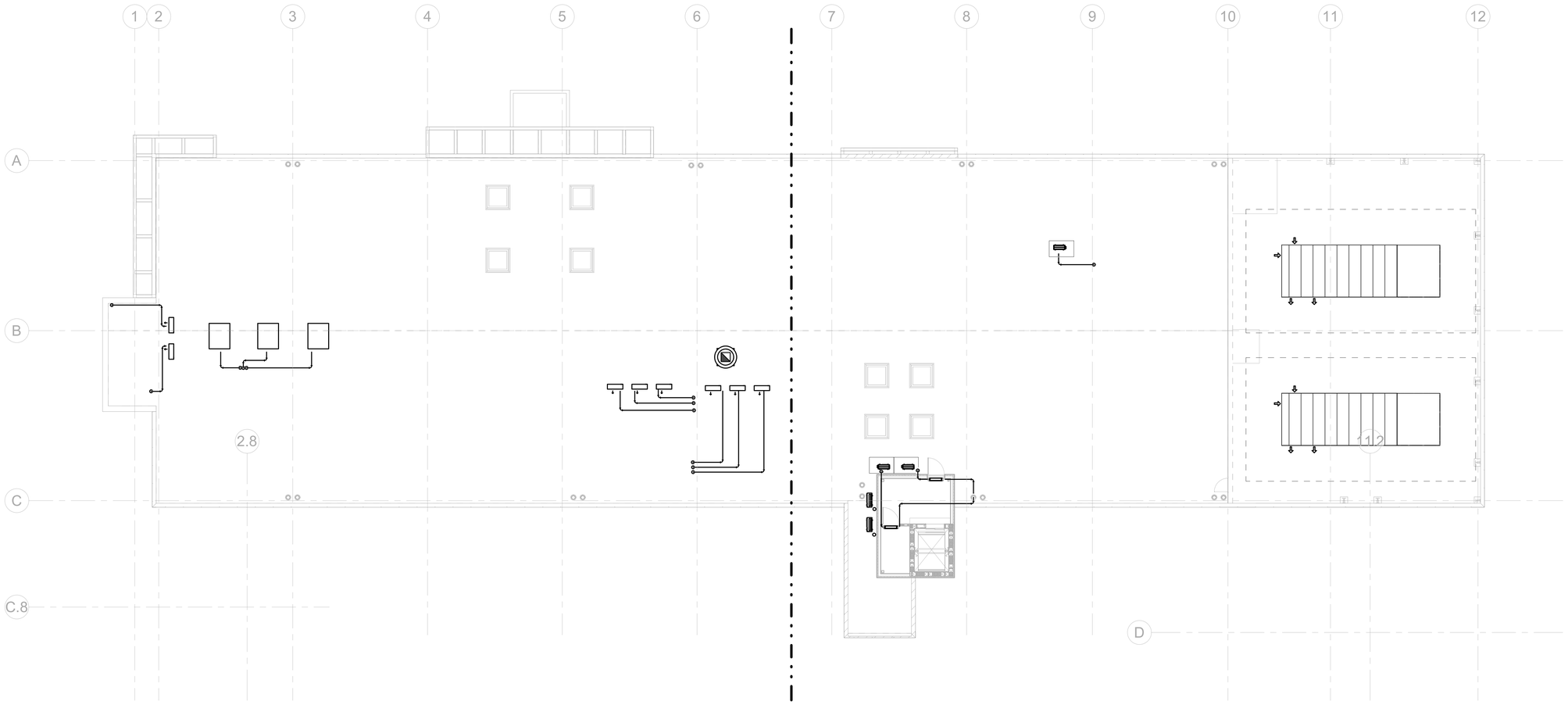

1 ROOF - MECHANICAL OVERALL PLAN
3/32" = 1'-0"

GENERAL NOTES:

1. THE DRAWINGS ARE DIAGRAMMATIC IN NATURE. THE CONTRACTOR IS RESPONSIBLE FOR ALL OFFSETS, TRANSITIONS, ELBOWS, ETC. AS REQUIRED IN DUCTWORK, PIPING, SUPPORTS, ETC. TO COMPLETE THE WORK IN A CLEAN FUNCTIONAL INSTALLATION THAT IS FULLY COORDINATED WITH ALL OTHER TRADES. ANY PRICING EFFORT SHALL TAKE THESE FACTORS INTO ACCOUNT.

2. MAINTAIN CODE REQUIRED AREA OF SEPARATION FROM OUTSIDE AIR INTAKES TO TERMINATIONS OF EXHAUST, COMBUSTION AIR, PLUMBING VENTS, ETC.

3. COORDINATE EQUIPMENT HOUSEKEEPING PAD DIMENSIONS AND LAYOUT WITH THE GENERAL CONTRACTOR BASED ON FINAL EQUIPMENT SIZES.

4. PROVIDE MANUAL BALANCE DAMPERS IN ALL SUPPLY DUCT BRANCH TAPS DOWNSTREAM OF VAV BOXES.

5. PROVIDE MANUAL BALANCE DAMPERS IN ALL EXHAUST DUCT BRANCH TAPS.

6. PROVIDE TRANSFER "Z" BOOT DUCTS IN FULL HEIGHT WALLS WHERE A PLENUM RETURN SYSTEM IS UTILIZED. BOOTS SHALL BE SIZED TO MAINTAIN A MAXIMUM OF 400 FPM. PROVIDE A GRILLE FOR ALL TRANSFERS IN EXPOSED AREAS. RE: ARCH.

7. COORDINATE SPACE TEMPERATURE SENSORS AND THERMOSTAT LOCATIONS TO ALIGN VERTICALLY WITH LIGHT SWITCHES. PROVIDE COMBINATION TEMPERATURE AND CO SENSORS AT ALL LOATIONS WHERE TEMPERATURE SENSORS ARE SHOWN.

8. TEMPERATURE CONTROLS CONTRACTOR SHALL SUBMIT PLANS INDICATING ALL SPACE TEMPERATURE SENSORS, T-STATS, HUMIDITY SENSORS, ETC. AS PART OF SUBMITTAL PROCESS FOR A/E REVIEW PRIOR TO ROUGH-IN.

9. PROVIDE THROUGH FACE BALANCING FOR ALL DIFFUSERS, REGISTERS, AND GRILLES ABOVE INACCESSIBLE AREAS.

10. PROVIDE TURNING VANES IN ALL 90° DUCT ELBOWS.

11. INSTALL EXPOSED DUCTWORK AS HIGH AS POSSIBLE.

13. ALL DUCT/PIPE PENETRATIONS THROUGH FIRE RATED/SMOKE RATED PARTITIONS SHALL BE CAULKED AND SEALED TO MEET THE RATING REQUIRED. REFER TO LIFE SAFETY DRAWINGS FOR FIRE/SMOKE RATING REQUIREMENTS.

14. REFER TO ACHITECTURAL PLANS FOR SECURE WALL LOCATIONS. IN ADDITION TO THE MANBARS SHOWN ON PLAN PROVIDE MANBARS IN ALL DUCTS LARGER THEN 12"x12" PENETRATING SECURE WALLS.

15. PROVIDE CONDENSATE DRAIN FROM ALL DX EVAPORATOR COILS TO NEAREST MOP SINK OR MECHANICAL ROOM FLOOR DRAIN. PROVIDE CONDENSATE PUMP FOR WALL MOUNTED UNITS AND CONCEALED UNITS THAT CANNOT BE GRAVITY DRAINED TO TERMINATION LOCATION

KEYNOTES

BRINKLEY SARGENT WIGINTON ARCHITECTS

Architect: Brinkley Sargent Wigginton Architects (972) 960-9970
Landscape: Kendall Landscape Architecture (214) 739-3226
Structural: L.A. Fuess Partners, Inc (214) 593-1118
MEP: M-E Engineers (214) 741-1589
Civil: KSA Engineers, Inc (903) 236-7700
Technology: M-E Engineers (303) 421-6656

LONGVIEW POLICE DEPARTMENT

518 W. SOUTH ST. LONGVIEW, TEXAS 75601

History		
#	Date	Description

STATE OF TEXAS
LAUREN F. BERRY
117369
LICENSED
PROFESSIONAL ENGINEER

ME Engineers, Inc.
F-10231
08/19/2020

ROOF - MECHANICAL OVERALL PLAN

BID ISSUE

20513
08/19/2020
M240

8/14/2020 11:04:43 AM

C:\Revit Projects\2015\LRL_CENTRAL_MYB_christopher.hoff2CLR.rvt

© 2020 Brinkley Sargent Wigginton Architects, Inc.

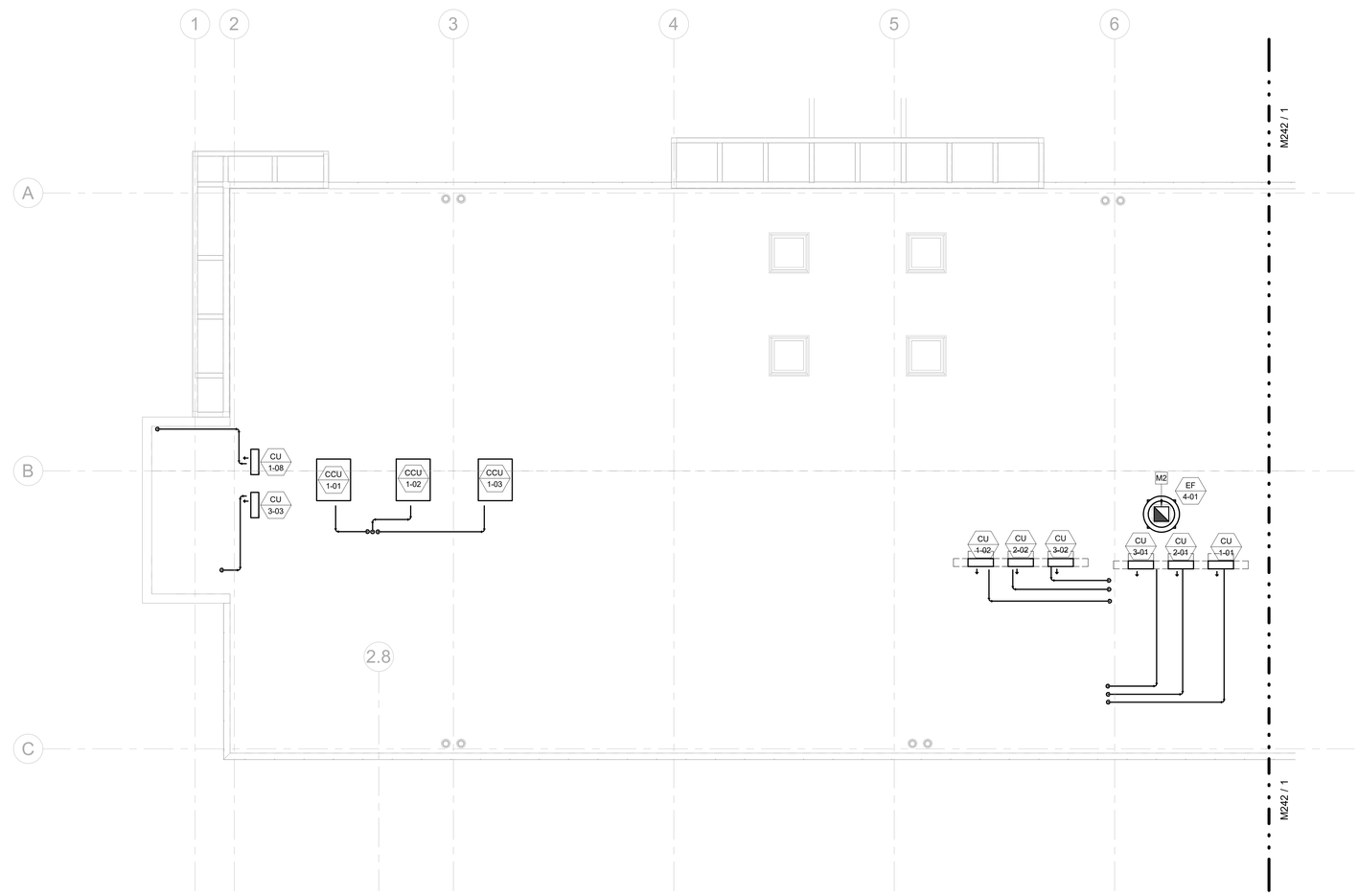

1 ROOF - MECHANICAL PLAN - WEST
1/8" = 1'-0"

GENERAL NOTES:

1. THE DRAWINGS ARE DIAGRAMMATIC IN NATURE. THE CONTRACTOR IS RESPONSIBLE FOR ALL OFFSETS, TRANSITIONS, ELBOWS, ETC. AS REQUIRED IN DUCTWORK, PIPING, SUPPORTS, ETC. TO COMPLETE THE WORK IN A CLEAN FUNCTIONAL INSTALLATION THAT IS FULLY COORDINATED WITH ALL OTHER TRADES. ANY PRICING EFFORT SHALL TAKE THESE FACTORS INTO ACCOUNT.

2. MAINTAIN CODE REQUIRED AREA OF SEPARATION FROM OUTSIDE AIR INTAKES TO TERMINATIONS OF EXHAUST, COMBUSTION AIR, PLUMBING VENTS, ETC.

3. COORDINATE EQUIPMENT HOUSEKEEPING PAD DIMENSIONS AND LAYOUT WITH THE GENERAL CONTRACTOR BASED ON FINAL EQUIPMENT SIZES.

4. PROVIDE MANUAL BALANCE DAMPERS IN ALL SUPPLY DUCT BRANCH TAPS DOWNSTREAM OF VAV BOXES.

5. PROVIDE MANUAL BALANCE DAMPERS IN ALL EXHAUST DUCT BRANCH TAPS.

6. PROVIDE TRANSFER "Z" BOOT DUCTS IN FULL HEIGHT WALLS WHERE A PLENUM RETURN SYSTEM IS UTILIZED. BOOTS SHALL BE SIZED TO MAINTAIN A MAXIMUM OF 400 FPM. PROVIDE A GRILLE FOR ALL TRANSFERS IN EXPOSED AREAS. RE: ARCH.

7. COORDINATE SPACE TEMPERATURE SENSORS AND THERMOSTAT LOCATIONS TO ALIGN VERTICALLY WITH LIGHT SWITCHES. PROVIDE COMBINATION TEMPERATURE AND CO SENSORS AT ALL LOATIONS WHERE TEMPERATURE SENSORS ARE SHOWN.

8. TEMPERATURE CONTROLS CONTRACTOR SHALL SUBMIT PLANS INDICATING ALL SPACE TEMPERATURE SENSORS, T-STATS, HUMIDITY SENSORS, ETC. AS PART OF SUBMITTAL PROCESS FOR A/E REVIEW PRIOR TO ROUGH-IN.

9. PROVIDE THROUGH FACE BALANCING FOR ALL DIFFUSERS, REGISTERS, AND GRILLES ABOVE INACCESSIBLE AREAS.

10. PROVIDE TURNING VANES IN ALL 90" DUCT ELBOWS.

11. INSTALL EXPOSED DUCTWORK AS HIGH AS POSSIBLE.

13. ALL DUCT/PIPE PENETRATIONS THROUGH FIRE RATED/SMOKE RATED PARTITIONS SHALL BE CAULKED AND SEALED TO MEET THE RATING REQUIRED. REFER TO LIFE SAFETY DRAWINGS FOR FIRE/SMOKE RATING REQUIREMENTS.

14. REFER TO ACHITECTURAL PLANS FOR SECURE WALL LOCATIONS. IN ADDITION TO THE MANBARS SHOWN ON PLAN PROVIDE MANBARS IN ALL DUCTS LARGER THEN 12"x12" PENETRATING SECURE WALLS.

15. PROVIDE CONDENSATE DRAIN FROM ALL DX EVAPORATOR COILS TO NEAREST MOP SINK OR MECHANICAL ROOM FLOOR DRAIN. PROVIDE CONDENSATE PUMP FOR WALL MOUNTED UNITS AND CONCEALED UNITS THAT CANNOT BE GRAVITY DRAINED TO TERMINATION LOCATION.

KEYNOTES	
M2	DUCT DOWN.

BRINKLEY SARGENT WIGINTON ARCHITECTS

Architect: Brinkley Sargent Wigginton Architects (972) 960-9970
Landscape: Kendall Landscape Architecture (214) 739-3226
Structural: L.A. Fuess Partners, Inc (214) 593-1118
MEP: M-E Engineers (214) 741-1589
Civil: KSA Engineers, Inc (903) 236-7700
Technology: M-E Engineers (303) 421-6656

LONGVIEW POLICE DEPARTMENT

518 W. SOUTH ST. LONGVIEW, TEXAS 75601

History		
#	Date	Description

STATE OF TEXAS
LAUREN F. BERRY
117369
LICENSED
PROFESSIONAL ENGINEER
ME Engineers, Inc.
F-10231
08/19/2020

ROOF - MECHANICAL PLAN - WEST

BID ISSUE

20513
08/19/2020
M241

8/14/2020 11:04:44 AM

C:\Revit Projects\2018\LPD_CENTRAL_M19_centralpwr-mep(PDC)R.rvt

© 2020 Brinkley Sargent Wigginton Architects, Inc.

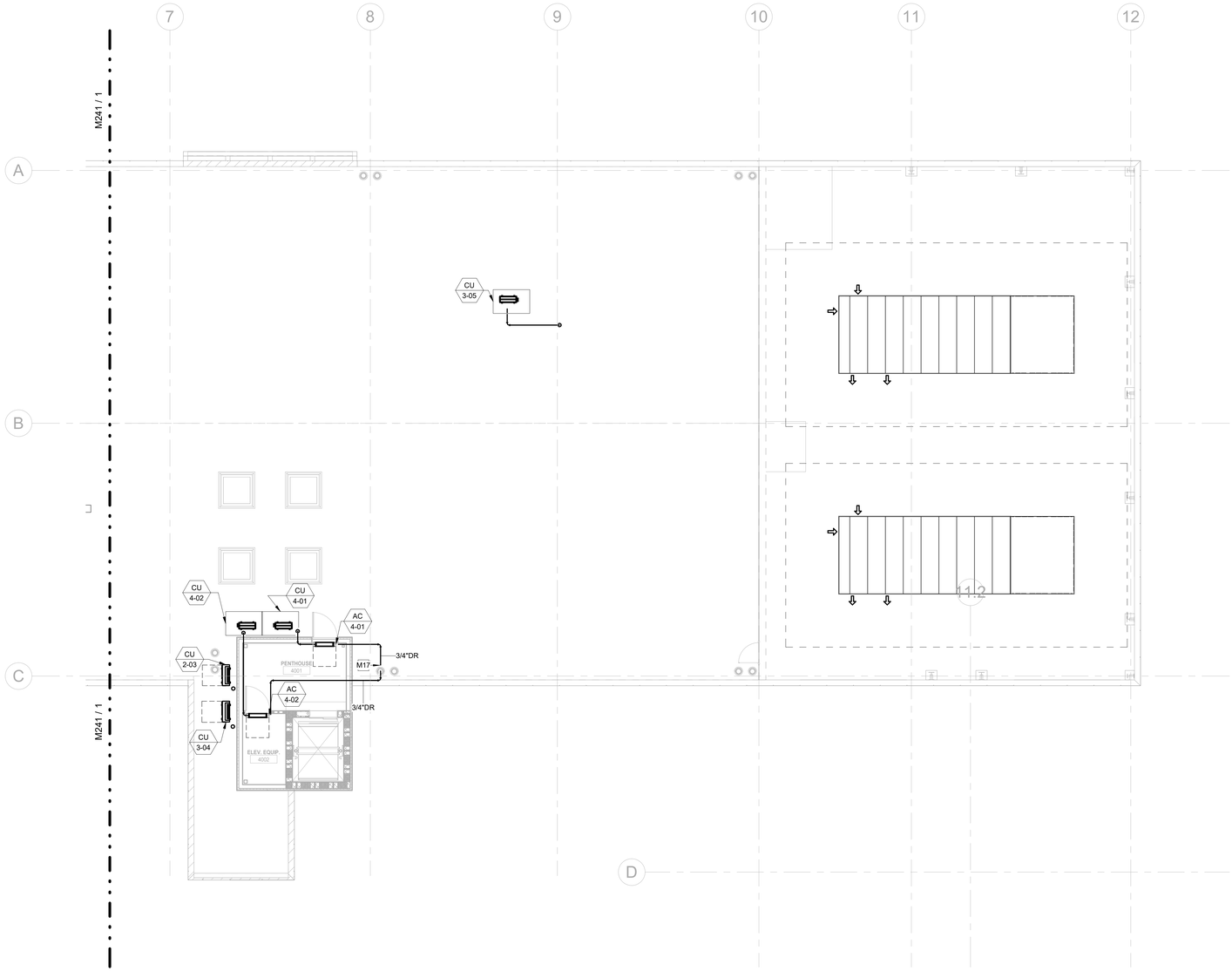

1 ROOF - MECHANICAL PLAN - EAST
1/8" = 1'-0"

Architect: Brinkley Sargent Wigginton Architects (972) 960-9970
Landscape: Kendall Landscape Architecture (214) 739-3226
Structural: L.A. Fuess Partners, Inc (214) 593-1118
MEP: M-E Engineers (214) 741-1589
Civil: KSA Engineers, Inc (903) 236-7700
Technology: M-E Engineers (303) 421-6656

BRINKLEY SARGENT WIGINTON ARCHITECTS

LONGVIEW POLICE DEPARTMENT

518 W. SOUTH ST. LONGVIEW, TEXAS 75601

History

#	Date	Description

STATE OF TEXAS
LAUREN F. BERRY
117369
LICENSED
PROFESSIONAL ENGINEER
ME Engineers, Inc.
F-10231
08/19/2020

ROOF - MECHANICAL PLAN - EAST

20513
08/19/2020
M242

BID ISSUE

8/14/2020 11:04:48 AM

C:\Revit Projects\2019\LPD_CENTRAL_MTG_christopher.nuj@PCI.rvt

© 2020 Brinkley Sargent Wigginton Architects, Inc.

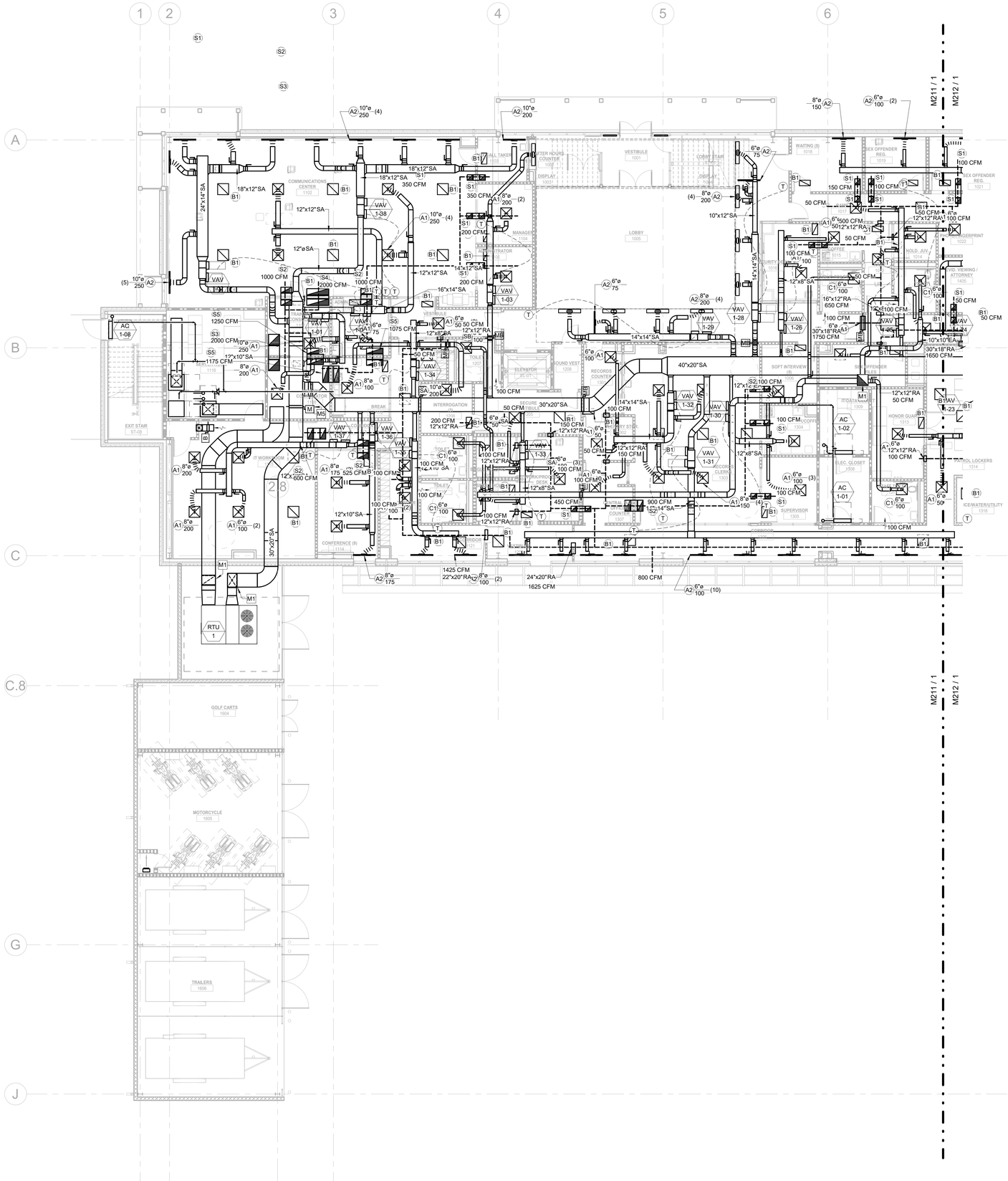

1 LEVEL 1 - MECHANICAL PLAN RETURN - WEST
1/8" = 1'-0"

GENERAL NOTES:

1. THE DRAWINGS ARE DIAGRAMMATIC IN NATURE. THE CONTRACTOR IS RESPONSIBLE FOR ALL OFFSETS, TRANSITIONS, ELBOWS, ETC. AS REQUIRED IN DUCTWORK, PIPING, SUPPORTS, ETC. TO COMPLETE THE WORK IN A CLEAN FUNCTIONAL INSTALLATION THAT IS FULLY COORDINATED WITH ALL OTHER TRADES. ANY PRICING EFFORT SHALL TAKE THESE FACTORS INTO ACCOUNT.

2. MAINTAIN CODE REQUIRED AREA OF SEPARATION FROM OUTSIDE AIR INTAKES TO TERMINATIONS OF EXHAUST, COMBUSTION AIR, PLUMBING VENTS, ETC.

3. COORDINATE EQUIPMENT HOUSEKEEPING PAD DIMENSIONS AND LAYOUT WITH THE GENERAL CONTRACTOR BASED ON FINAL EQUIPMENT SIZES.

4. PROVIDE MANUAL BALANCE DAMPERS IN ALL SUPPLY DUCT BRANCH TAPS DOWNSTREAM OF VAV BOXES.

5. PROVIDE MANUAL BALANCE DAMPERS IN ALL EXHAUST DUCT BRANCH TAPS.

6. PROVIDE TRANSFER "Z" BOOT DUCTS IN FULL HEIGHT WALLS WHERE A PLENUM RETURN SYSTEM IS UTILIZED. BOOTS SHALL BE SIZED TO MAINTAIN A MAXIMUM OF 400 FPM. PROVIDE A GRILLE FOR ALL TRANSFERS IN EXPOSED AREAS. RE: ARCH.

7. COORDINATE SPACE TEMPERATURE SENSORS AND THERMOSTAT LOCATIONS TO ALIGN VERTICALLY WITH LIGHT SWITCHES. PROVIDE COMBINATION TEMPERATURE AND CO SENSORS AT ALL LOATIONS WHERE TEMPERATURE SENSORS ARE SHOWN.

8. TEMPERATURE CONTROLS CONTRACTOR SHALL SUBMIT PLANS INDICATING ALL SPACE TEMPERATURE SENSORS, T-STATS, HUMIDITY SENSORS, ETC. AS PART OF SUBMITTAL PROCESS FOR A/E REVIEW PRIOR TO ROUGH-IN.

9. PROVIDE THROUGH FACE BALANCING FOR ALL DIFFUSERS, REGISTERS, AND GRILLES ABOVE INACCESSIBLE AREAS.

10. PROVIDE TURNING VANES IN ALL 90° DUCT ELBOWS.

11. INSTALL EXPOSED DUCTWORK AS HIGH AS POSSIBLE.

13. ALL DUCT/PIPE PENETRATIONS THROUGH FIRE RATED/SMOKE RATED PARTITIONS SHALL BE CAULKED AND SEALED TO MEET THE RATING REQUIRED. REFER TO LIFE SAFETY DRAWINGS FOR FIRE/SMOKE RATING REQUIREMENTS.

14. REFER TO ACHITECTURAL PLANS FOR SECURE WALL LOCATIONS. IN ADDITION TO THE MANBARS SHOWN ON PLAN PROVIDE MANBARS IN ALL DUCTS LARGER THEN 12"x12" PENETRATING SECURE WALLS.

15. PROVIDE CONDENSATE DRAIN FROM ALL DX EVAPORATOR COILS TO NEAREST MOP SINK OR MECHANICAL ROOM FLOOR DRAIN. PROVIDE CONDENSATE PUMP FOR WALL MOUNTED UNITS AND CONCEALED UNITS THAT CANNOT BE GRAVITY DRAINED TO TERMINATION LOCATION.

KEYNOTES

M1	DUCT UP.
M5	SYSTEM HEADED TOGETHER FOR BACKUP OPERATION.

Architect: Brinkley Sargent Wigginton Architects (972) 960-9970
Landscape: Kendall Landscape Architecture (214) 739-3226
Structural: L.A. Fuess Partners, Inc (214) 593-1118
MEP: M-E Engineers (214) 741-1589
Civil: KSA Engineers, Inc (903) 236-7700
Technology: M-E Engineers (303) 421-6656

BRINKLEY SARGENT WIGINTON ARCHITECTS

LONGVIEW POLICE DEPARTMENT

518 W. SOUTH ST. LONGVIEW, TEXAS 75601

History		
#	Date	Description

STATE OF TEXAS
LAUREN F. BERRY
117369
LICENSED PROFESSIONAL ENGINEER
ME Engineers, Inc.
F-10231
08/19/2020

LEVEL 1 - MECHANICAL PLAN RETURN - WEST

BID ISSUE

20513
08/19/2020
M311

8/14/2020 11:04:52 AM

C:\Revit Projects\20513\LPD_CENTRAL_M1B_christopher.hall@CLK.rvt

© 2020 Brinkley Sargent Wigginton Architects, Inc.

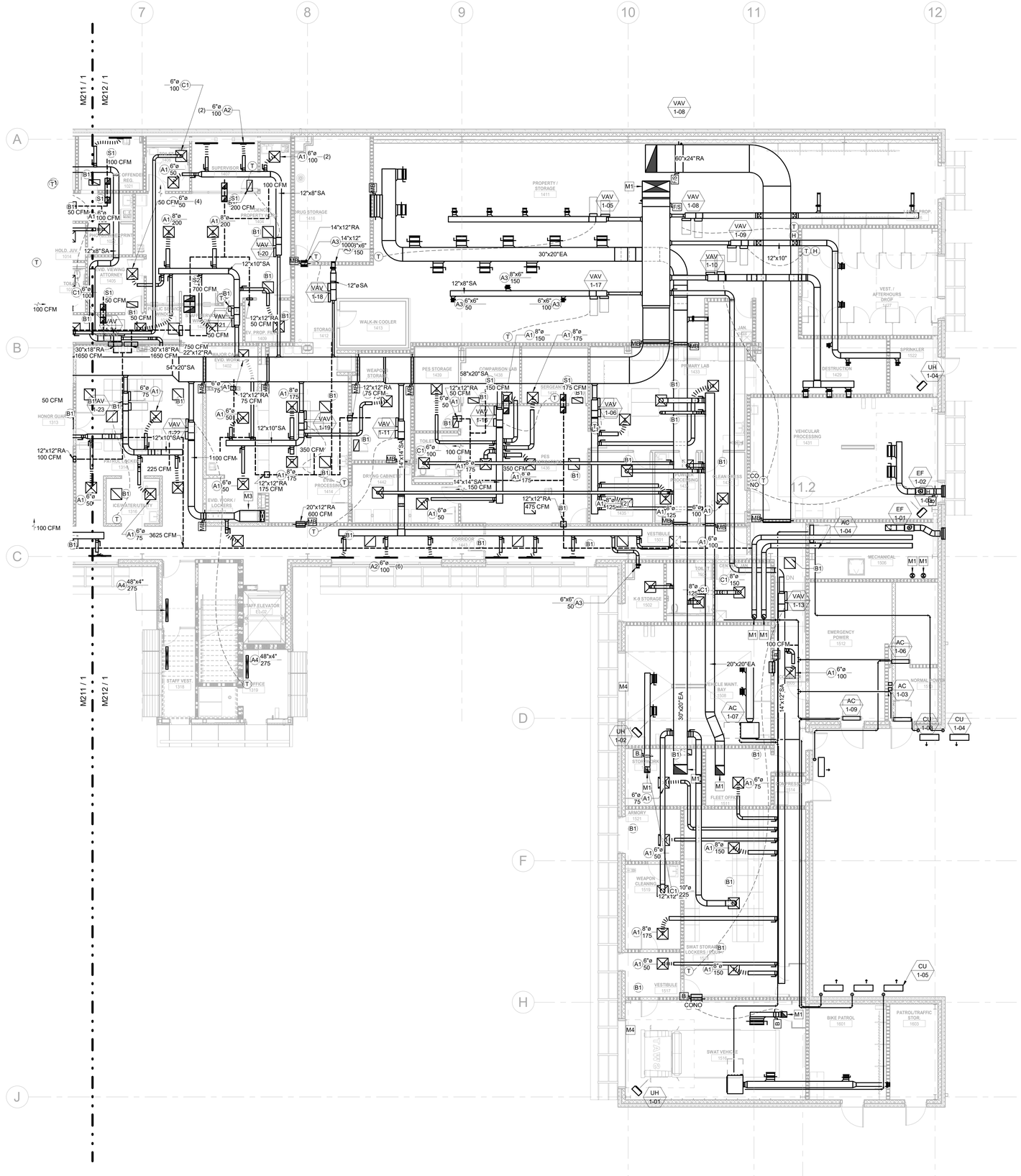

1 LEVEL 1 - MECHANICAL PLAN RETURN - EAST
1/8" = 1'-0"

GENERAL NOTES:

1. THE DRAWINGS ARE DIAGRAMMATIC IN NATURE. THE CONTRACTOR IS RESPONSIBLE FOR ALL OFFSETS, TRANSITIONS, ELBOWS, ETC. AS REQUIRED IN DUCTWORK, PIPING, SUPPORTS, ETC. TO COMPLETE THE WORK IN A CLEAN FUNCTIONAL INSTALLATION THAT IS FULLY COORDINATED WITH ALL OTHER TRADES. ANY PRICING EFFORT SHALL TAKE THESE FACTORS INTO ACCOUNT.

2. MAINTAIN CODE REQUIRED AREA OF SEPARATION FROM OUTSIDE AIR INTAKES TO TERMINATIONS OF EXHAUST, COMBUSTION AIR, PLUMBING VENTS, ETC.

3. COORDINATE EQUIPMENT HOUSEKEEPING PAD DIMENSIONS AND LAYOUT WITH THE GENERAL CONTRACTOR BASED ON FINAL EQUIPMENT SIZES.

4. PROVIDE MANUAL BALANCE DAMPERS IN ALL SUPPLY DUCT BRANCH TAPS DOWNSTREAM OF VAV BOXES.

5. PROVIDE MANUAL BALANCE DAMPERS IN ALL EXHAUST DUCT BRANCH TAPS.

6. PROVIDE TRANSFER "Z" BOOT DUCTS IN FULL HEIGHT WALLS WHERE A PLENUM RETURN SYSTEM IS UTILIZED. BOOTS SHALL BE SIZED TO MAINTAIN A MAXIMUM OF 400 FPM. PROVIDE A GRILLE FOR ALL TRANSFERS IN EXPOSED AREAS. RE: ARCH.

7. COORDINATE SPACE TEMPERATURE SENSORS AND THERMOSTAT LOCATIONS TO ALIGN VERTICALLY WITH LIGHT SWITCHES. PROVIDE COMBINATION TEMPERATURE AND CO SENSORS AT ALL LOATIONS WHERE TEMPERATURE SENSORS ARE SHOWN.

8. TEMPERATURE CONTROLS CONTRACTOR SHALL SUBMIT PLANS INDICATING ALL SPACE TEMPERATURE SENSORS, T-STATS, HUMIDITY SENSORS, ETC. AS PART OF SUBMITTAL PROCESS FOR A/E REVIEW PRIOR TO ROUGH-IN.

9. PROVIDE THROUGH FACE BALANCING FOR ALL DIFFUSERS, REGISTERS, AND GRILLES ABOVE INACCESSIBLE AREAS.

10. PROVIDE TURNING VANES IN ALL 90° DUCT ELBOWS.

11. INSTALL EXPOSED DUCTWORK AS HIGH AS POSSIBLE.

13. ALL DUCT/PIPE PENETRATIONS THROUGH FIRE RATED/SMOKE RATED PARTITIONS SHALL BE CAULKED AND SEALED TO MEET THE RATING REQUIRED. REFER TO LIFE SAFETY DRAWINGS FOR FIRE/SMOKE RATING REQUIREMENTS.

14. REFER TO ACHITECTURAL PLANS FOR SECURE WALL LOCATIONS. IN ADDITION TO THE MANBARS SHOWN ON PLAN PROVIDE MANBARS IN ALL DUCTS LARGER THEN 12"x12" PENETRATING SECURE WALLS.

15. PROVIDE CONDENSATE DRAIN FROM ALL DX EVAPORATOR COILS TO NEAREST MOP SINK OR MECHANICAL ROOM FLOOR DRAIN. PROVIDE CONDENSATE PUMP FOR WALL MOUNTED UNITS AND CONCEALED UNITS THAT CANNOT BE GRAVITY DRAINED TO TERMINATION LOCATION.

KEYNOTES	
M1	DUCT UP.
M3	VENTLESS HOOD.
M4	MOTORIZED DOOR INTERLOCKED WITH EXHAUST FAN.

BRINKLEY SARGENT WIGINTON ARCHITECTS

Architect: Brinkley Sargent Wigginton Architects (972) 960-9970
Landscape: Kendall Landscape Architecture (214) 739-3226
Structural: L.A. Fuess Partners, Inc (214) 593-1118
MEP: M-E Engineers (214) 741-1589
Civil: KSA Engineers, Inc (903) 236-7700
Technology: M-E Engineers (303) 421-6656

LONGVIEW POLICE DEPARTMENT

518 W. SOUTH ST. LONGVIEW, TEXAS 75601

History		
#	Date	Description

STATE OF TEXAS
LAUREN F. BERRY
117369
LICENSED
PROFESSIONAL ENGINEER
ME Engineers, Inc.
F-10231
08/19/2020

LEVEL 1 - MECHANICAL PLAN RETURN - EAST

20513
08/19/2020
M312

BID ISSUE

8/19/2020 11:04:59 AM

C:\Revit Projects\2019\LVPD_CENTRAL_MYB_christopher.ruiz@PCUK.rvt

© 2020 Brinkley Sargent Wigginton Architects, Inc.

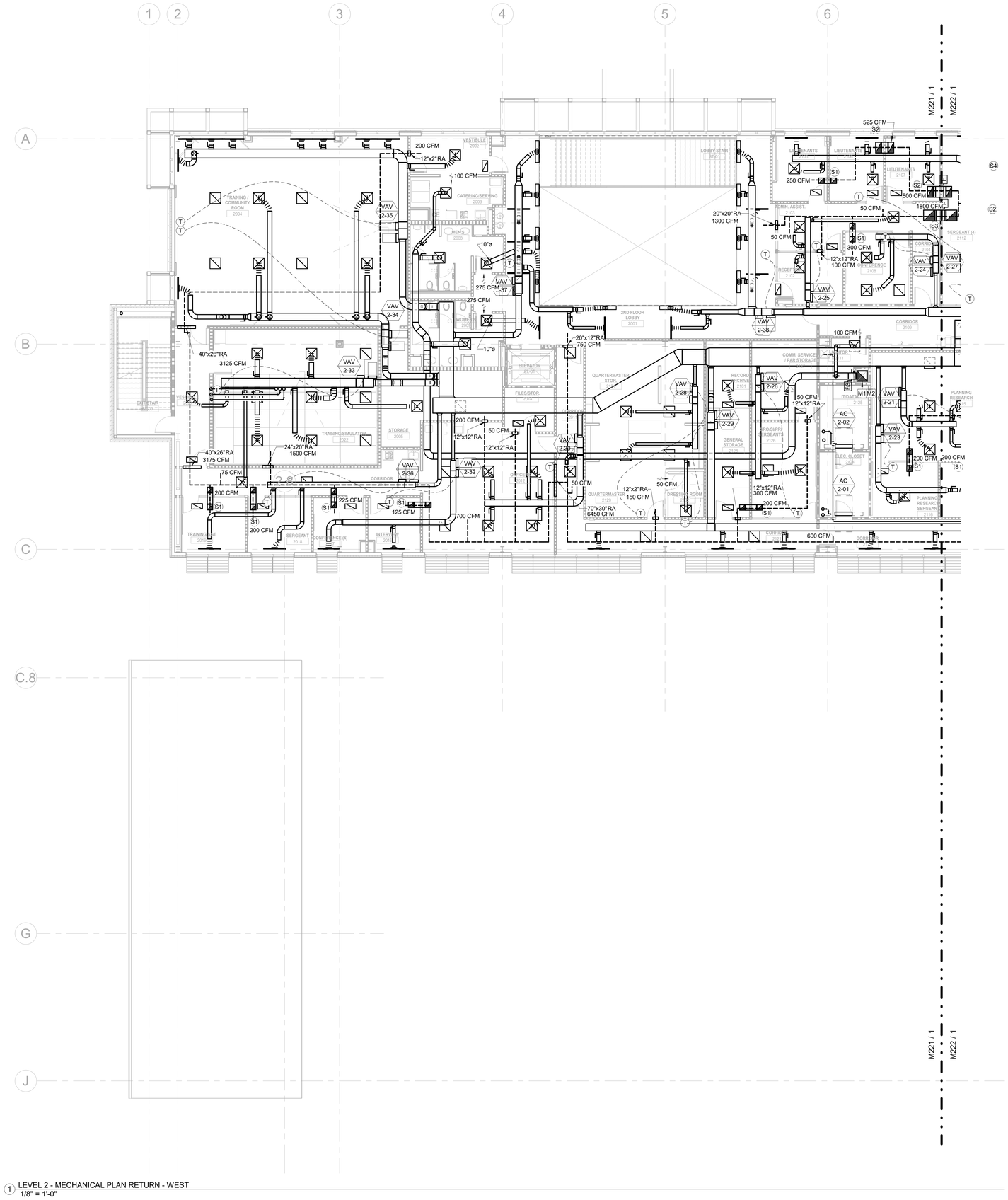

1 LEVEL 2 - MECHANICAL PLAN RETURN - WEST
1/8" = 1'-0"

GENERAL NOTES:

1. THE DRAWINGS ARE DIAGRAMMATIC IN NATURE. THE CONTRACTOR IS RESPONSIBLE FOR ALL OFFSETS, TRANSITIONS, ELBOWS, ETC. AS REQUIRED IN DUCTWORK, PIPING, SUPPORTS, ETC. TO COMPLETE THE WORK IN A CLEAN FUNCTIONAL INSTALLATION THAT IS FULLY COORDINATED WITH ALL OTHER TRADES. ANY PRICING EFFORT SHALL TAKE THESE FACTORS INTO ACCOUNT.

2. MAINTAIN CODE REQUIRED AREA OF SEPARATION FROM OUTSIDE AIR INTAKES TO TERMINATIONS OF EXHAUST, COMBUSTION AIR, PLUMBING VENTS, ETC.

3. COORDINATE EQUIPMENT HOUSEKEEPING PAD DIMENSIONS AND LAYOUT WITH THE GENERAL CONTRACTOR BASED ON FINAL EQUIPMENT SIZES.

4. PROVIDE MANUAL BALANCE DAMPERS IN ALL SUPPLY DUCT BRANCH TAPS DOWNSTREAM OF VAV BOXES.

5. PROVIDE MANUAL BALANCE DAMPERS IN ALL EXHAUST DUCT BRANCH TAPS.

6. PROVIDE TRANSFER "Z" BOOT DUCTS IN FULL HEIGHT WALLS WHERE A PLENUM RETURN SYSTEM IS UTILIZED. BOOTS SHALL BE SIZED TO MAINTAIN A MAXIMUM OF 400 FPM. PROVIDE A GRILLE FOR ALL TRANSFERS IN EXPOSED AREAS. RE: ARCH.

7. COORDINATE SPACE TEMPERATURE SENSORS AND THERMOSTAT LOCATIONS TO ALIGN VERTICALLY WITH LIGHT SWITCHES. PROVIDE COMBINATION TEMPERATURE AND CO SENSORS AT ALL LOATIONS WHERE TEMPERATURE SENSORS ARE SHOWN.

8. TEMPERATURE CONTROLS CONTRACTOR SHALL SUBMIT PLANS INDICATING ALL SPACE TEMPERATURE SENSORS, T-STATS, HUMIDITY SENSORS, ETC. AS PART OF SUBMITTAL PROCESS FOR A/E REVIEW PRIOR TO ROUGH-IN.

9. PROVIDE THROUGH FACE BALANCING FOR ALL DIFFUSERS, REGISTERS, AND GRILLES ABOVE INACCESSIBLE AREAS.

10. PROVIDE TURNING VANES IN ALL 90" DUCT ELBOWS.

11. INSTALL EXPOSED DUCTWORK AS HIGH AS POSSIBLE.

13. ALL DUCT/PIPE PENETRATIONS THROUGH FIRE RATED/SMOKE RATED PARTITIONS SHALL BE CAULKED AND SEALED TO MEET THE RATING REQUIRED. REFER TO LIFE SAFETY DRAWINGS FOR FIRE/SMOKE RATING REQUIREMENTS.

14. REFER TO ACHITECTURAL PLANS FOR SECURE WALL LOCATIONS. IN ADDITION TO THE MANBARS SHOWN ON PLAN PROVIDE MANBARS IN ALL DUCTS LARGER THEN 12"x12" PENETRATING SECURE WALLS.

15. PROVIDE CONDENSATE DRAIN FROM ALL DX EVAPORATOR COILS TO NEAREST MOP SINK OR MECHANICAL ROOM FLOOR DRAIN. PROVIDE CONDENSATE PUMP FOR WALL MOUNTED UNITS AND CONCEALED UNITS THAT CANNOT BE GRAVITY DRAINED TO TERMINATION LOCATION.

KEYNOTES	
M1	DUCT UP.
M2	DUCT DOWN.

BRINKLEY SARGENT WIGINTON ARCHITECTS

Architect: Brinkley Sargent Wigginton Architects (972) 960-9970
Landscape: Kendall Landscape Architecture (214) 739-3226
Structural: L.A. Fuess Partners, Inc (214) 593-1118
MEP: M-E Engineers (214) 741-1589
Civil: KSA Engineers, Inc (903) 236-7700
Technology: M-E Engineers (303) 421-6656

LONGVIEW POLICE DEPARTMENT

518 W. SOUTH ST. LONGVIEW, TEXAS 75601

History		
#	Date	Description

STATE OF TEXAS
LAUREN F. BERRY
117369
LICENSED
PROFESSIONAL ENGINEER

ME Engineers, Inc.
F-10231
08/19/2020

LEVEL 2 - MECHANICAL PLAN RETURN - WEST

20513
08/19/2020

M321

BID ISSUE

8/14/2020 11:05:02 AM

C:\Revit Projects\2019\URL_CENTRAL_M19_christopher.hoff@TCA.net

© 2020 Brinkley Sargent Wigginton Architects, Inc.

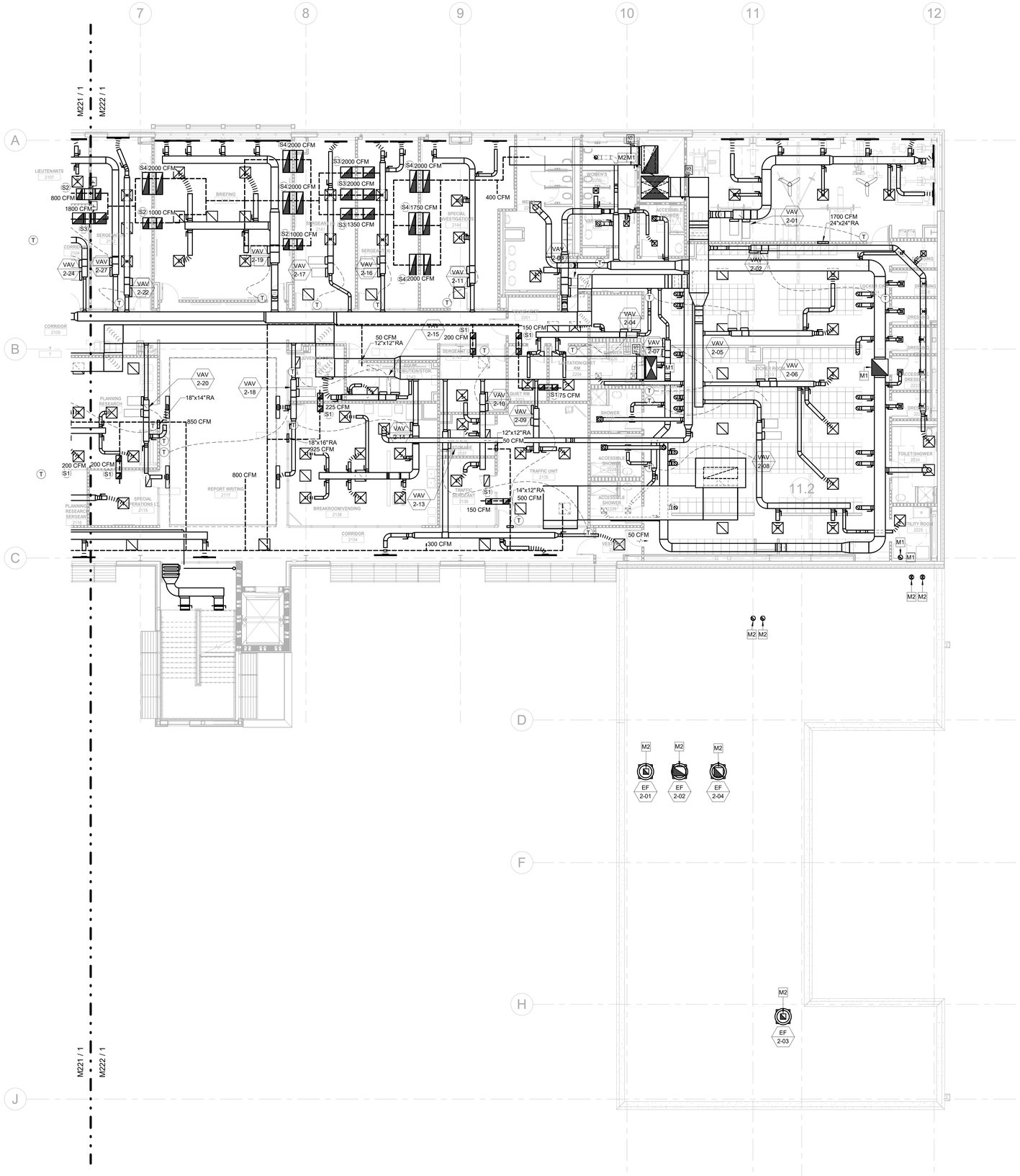

1 LEVEL 2 - MECHANICAL PLAN RETURN - EAST
1/8" = 1'-0"

GENERAL NOTES:

1. THE DRAWINGS ARE DIAGRAMMATIC IN NATURE. THE CONTRACTOR IS RESPONSIBLE FOR ALL OFFSETS, TRANSITIONS, ELBOWS, ETC. AS REQUIRED IN DUCTWORK, PIPING, SUPPORTS, ETC. TO COMPLETE THE WORK IN A CLEAN FUNCTIONAL INSTALLATION THAT IS FULLY COORDINATED WITH ALL OTHER TRADES. ANY PRICING EFFORT SHALL TAKE THESE FACTORS INTO ACCOUNT.

2. MAINTAIN CODE REQUIRED AREA OF SEPARATION FROM OUTSIDE AIR INTAKES TO TERMINATIONS OF EXHAUST, COMBUSTION AIR, PLUMBING VENTS, ETC.

3. COORDINATE EQUIPMENT HOUSEKEEPING PAD DIMENSIONS AND LAYOUT WITH THE GENERAL CONTRACTOR BASED ON FINAL EQUIPMENT SIZES.

4. PROVIDE MANUAL BALANCE DAMPERS IN ALL SUPPLY DUCT BRANCH TAPS DOWNSTREAM OF VAV BOXES.

5. PROVIDE MANUAL BALANCE DAMPERS IN ALL EXHAUST DUCT BRANCH TAPS.

6. PROVIDE TRANSFER "Z" BOOT DUCTS IN FULL HEIGHT WALLS WHERE A PLENUM RETURN SYSTEM IS UTILIZED. BOOTS SHALL BE SIZED TO MAINTAIN A MAXIMUM OF 400 FPM. PROVIDE A GRILLE FOR ALL TRANSFERS IN EXPOSED AREAS. RE: ARCH.

7. COORDINATE SPACE TEMPERATURE SENSORS AND THERMOSTAT LOCATIONS TO ALIGN VERTICALLY WITH LIGHT SWITCHES. PROVIDE COMBINATION TEMPERATURE AND CO SENSORS AT ALL LOATIONS WHERE TEMPERATURE SENSORS ARE SHOWN.

8. TEMPERATURE CONTROLS CONTRACTOR SHALL SUBMIT PLANS INDICATING ALL SPACE TEMPERATURE SENSORS, T-STATS, HUMIDITY SENSORS, ETC. AS PART OF SUBMITTAL PROCESS FOR A/E REVIEW PRIOR TO ROUGH-IN.

9. PROVIDE THROUGH FACE BALANCING FOR ALL DIFFUSERS, REGISTERS, AND GRILLES ABOVE INACCESSIBLE AREAS.

10. PROVIDE TURNING VANES IN ALL 90° DUCT ELBOWS.

11. INSTALL EXPOSED DUCTWORK AS HIGH AS POSSIBLE.

13. ALL DUCT/PIPE PENETRATIONS THROUGH FIRE RATED/SMOKE RATED PARTITIONS SHALL BE CAULKED AND SEALED TO MEET THE RATING REQUIRED. REFER TO LIFE SAFETY DRAWINGS FOR FIRE/SMOKE RATING REQUIREMENTS.

14. REFER TO ACHITECTURAL PLANS FOR SECURE WALL LOCATIONS. IN ADDITION TO THE MANBARS SHOWN ON PLAN PROVIDE MANBARS IN ALL DUCTS LARGER THEN 12"x12" PENETRATING SECURE WALLS.

15. PROVIDE CONDENSATE DRAIN FROM ALL DX EVAPORATOR COILS TO NEAREST MOP SINK OR MECHANICAL ROOM FLOOR DRAIN. PROVIDE CONDENSATE PUMP FOR WALL MOUNTED UNITS AND CONCEALED UNITS THAT CANNOT BE GRAVITY DRAINED TO TERMINATION LOCATION

KEYNOTES	
M1	DUCT UP.
M2	DUCT DOWN.

Architect: Brinkley Sargent Wigginton Architects (972) 960-9970
Landscape: Kendall Landscape Architecture (214) 739-3226
Structural: L.A. Fuess Partners, Inc (214) 593-1118
MEP: M-E Engineers (214) 741-1589
Civil: KSA Engineers, Inc (903) 236-7700
Technology: M-E Engineers (303) 421-6656

BRINKLEY SARGENT WIGINTON ARCHITECTS

LONGVIEW POLICE DEPARTMENT

518 W. SOUTH ST. LONGVIEW, TEXAS 75601

History		
#	Date	Description

STATE OF TEXAS
LAUREN F. BERRY
117369
LICENSED PROFESSIONAL ENGINEER
ME Engineers, Inc.
F-10231
08/19/2020

LEVEL 2 - MECHANICAL PLAN RETURN - EAST

BID ISSUE

20513
08/19/2020
M322

E:\Revit Projects\2019\LPD_CENTRAL_M19_christopher.hoell@SLW.rvt
8/14/2020 11:05:07 AM

© 2020 Brinkley Sargent Wigginton Architects, Inc.

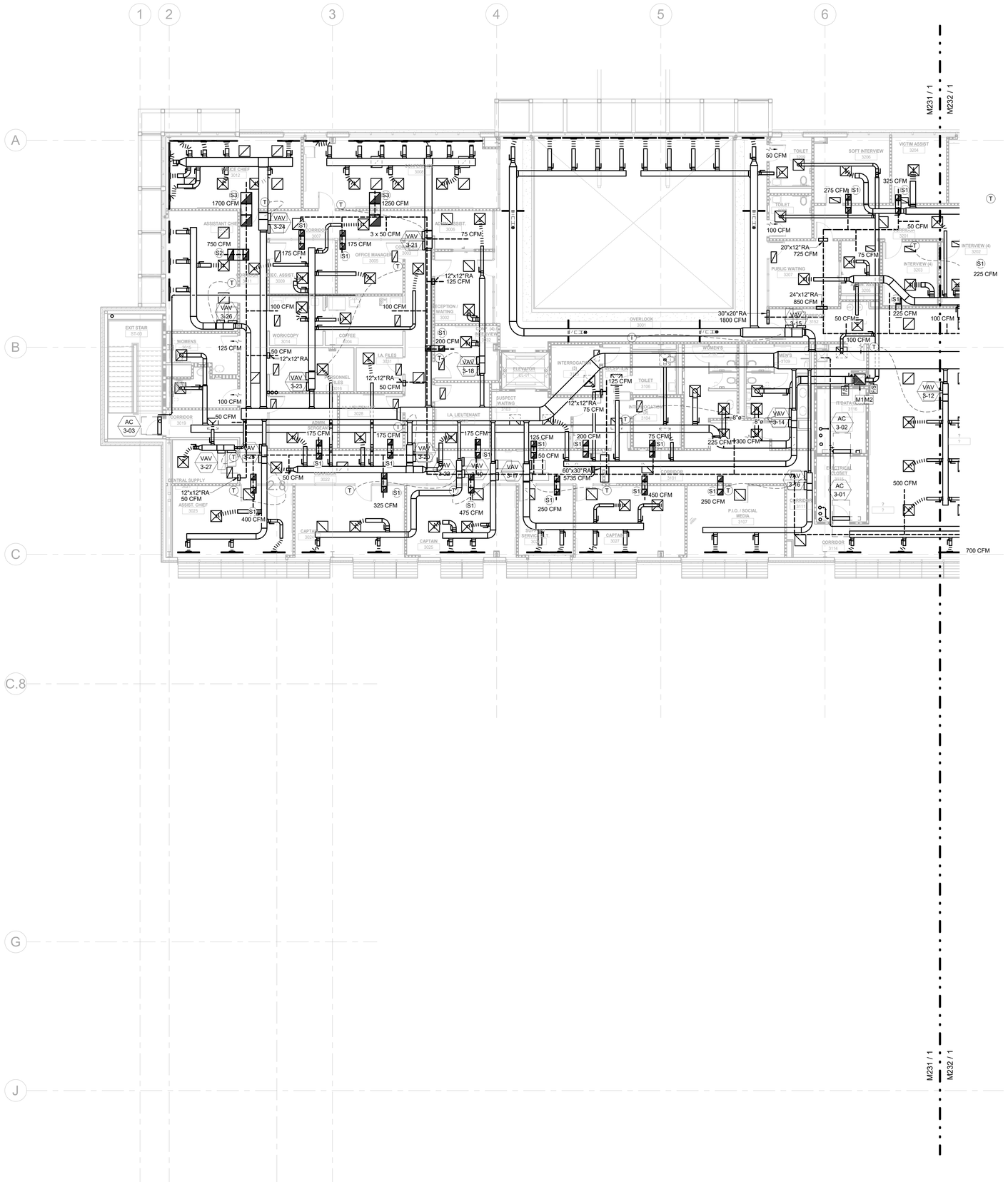

1 LEVEL 3 - MECHANICAL PLAN RETURN - WEST
1/8" = 1'-0"

GENERAL NOTES:

1. THE DRAWINGS ARE DIAGRAMMATIC IN NATURE. THE CONTRACTOR IS RESPONSIBLE FOR ALL OFFSETS, TRANSITIONS, ELBOWS, ETC. AS REQUIRED IN DUCTWORK, PIPING, SUPPORTS, ETC. TO COMPLETE THE WORK IN A CLEAN FUNCTIONAL INSTALLATION THAT IS FULLY COORDINATED WITH ALL OTHER TRADES. ANY PRICING EFFORT SHALL TAKE THESE FACTORS INTO ACCOUNT.

2. MAINTAIN CODE REQUIRED AREA OF SEPARATION FROM OUTSIDE AIR INTAKES TO TERMINATIONS OF EXHAUST, COMBUSTION AIR, PLUMBING VENTS, ETC.

3. COORDINATE EQUIPMENT HOUSEKEEPING PAD DIMENSIONS AND LAYOUT WITH THE GENERAL CONTRACTOR BASED ON FINAL EQUIPMENT SIZES.

4. PROVIDE MANUAL BALANCE DAMPERS IN ALL SUPPLY DUCT BRANCH TAPS DOWNSTREAM OF VAV BOXES.

5. PROVIDE MANUAL BALANCE DAMPERS IN ALL EXHAUST DUCT BRANCH TAPS.

6. PROVIDE TRANSFER "Z" BOOT DUCTS IN FULL HEIGHT WALLS WHERE A PLENUM RETURN SYSTEM IS UTILIZED. BOOTS SHALL BE SIZED TO MAINTAIN A MAXIMUM OF 400 FPM. PROVIDE A GRILLE FOR ALL TRANSFERS IN EXPOSED AREAS. RE: ARCH.

7. COORDINATE SPACE TEMPERATURE SENSORS AND THERMOSTAT LOCATIONS TO ALIGN VERTICALLY WITH LIGHT SWITCHES. PROVIDE COMBINATION TEMPERATURE AND CO SENSORS AT ALL LOATIONS WHERE TEMPERATURE SENSORS ARE SHOWN.

8. TEMPERATURE CONTROLS CONTRACTOR SHALL SUBMIT PLANS INDICATING ALL SPACE TEMPERATURE SENSORS, T-STATS, HUMIDITY SENSORS, ETC. AS PART OF SUBMITTAL PROCESS FOR A/E REVIEW PRIOR TO ROUGH-IN.

9. PROVIDE THROUGH FACE BALANCING FOR ALL DIFFUSERS, REGISTERS, AND GRILLES ABOVE INACCESSIBLE AREAS.

10. PROVIDE TURNING VANES IN ALL 90° DUCT ELBOWS.

11. INSTALL EXPOSED DUCTWORK AS HIGH AS POSSIBLE.

13. ALL DUCT/PIPE PENETRATIONS THROUGH FIRE RATED/SMOKE RATED PARTITIONS SHALL BE CAULKED AND SEALED TO MEET THE RATING REQUIRED. REFER TO LIFE SAFETY DRAWINGS FOR FIRE/SMOKE RATING REQUIREMENTS.

14. REFER TO ACHITECTURAL PLANS FOR SECURE WALL LOCATIONS. IN ADDITION TO THE MANBARS SHOWN ON PLAN PROVIDE MANBARS IN ALL DUCTS LARGER THEN 12"x12" PENETRATING SECURE WALLS.

15. PROVIDE CONDENSATE DRAIN FROM ALL DX EVAPORATOR COILS TO NEAREST MOP SINK OR MECHANICAL ROOM FLOOR DRAIN. PROVIDE CONDENSATE PUMP FOR WALL MOUNTED UNITS AND CONCEALED UNITS THAT CANNOT BE GRAVITY DRAINED TO TERMINATION LOCATION.

KEYNOTES

M1	DUCT UP.
M2	DUCT DOWN.

Architect: Brinkley Sargent Wigginton Architects (972) 960-9970
Landscape: Kendall Landscape Architecture (214) 739-3226
Structural: L.A. Fuess Partners, Inc (214) 593-1118
MEP: M-E Engineers (214) 741-1589
Civil: KSA Engineers, Inc (903) 236-7700
Technology: M-E Engineers (303) 421-6656

BRINKLEY SARGENT WIGINTON ARCHITECTS

LONGVIEW POLICE DEPARTMENT

518 W. SOUTH ST. LONGVIEW, TEXAS 75601

History

#	Date	Description

STATE OF TEXAS
LAUREN F. BERRY
117369
LICENSED
PROFESSIONAL ENGINEER
ME Engineers, Inc.
F-10231
08/19/2020

LEVEL 3 - MECHANICAL PLAN RETURN - WEST

20513
08/19/2020
M331

BID ISSUE

8/14/2020 11:05:12 AM

C:\Revit Projects\2019\URL_CENTRAL_M19_christopher.hoff@TCLA.rvt

© 2020 Brinkley Sargent Wigginton Architects, Inc.

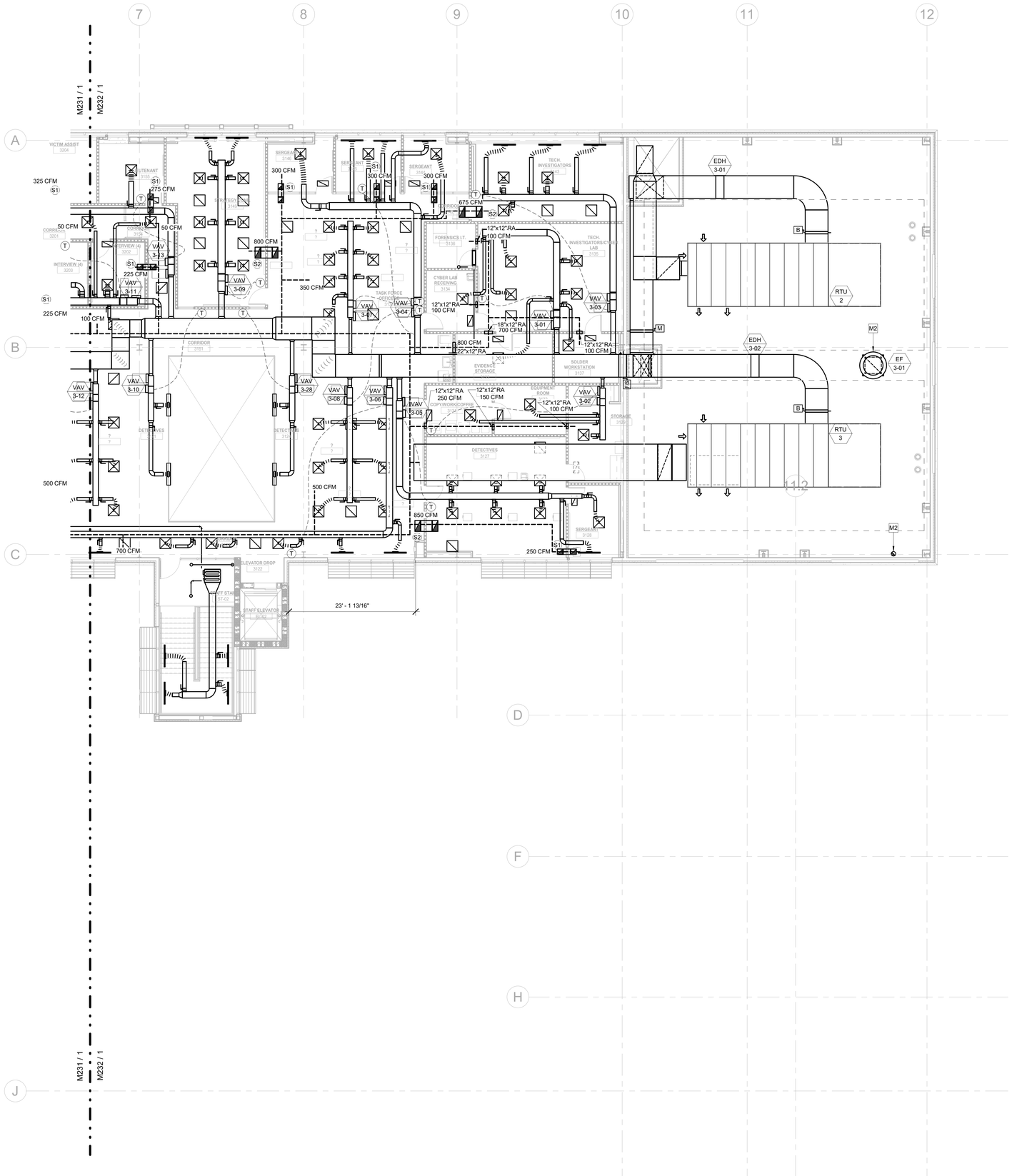

1 LEVEL 3 - MECHANICAL PLAN RETURN - EAST
1/8" = 1'-0"

GENERAL NOTES:

1. THE DRAWINGS ARE DIAGRAMMATIC IN NATURE. THE CONTRACTOR IS RESPONSIBLE FOR ALL OFFSETS, TRANSITIONS, ELBOWS, ETC. AS REQUIRED IN DUCTWORK, PIPING, SUPPORTS, ETC. TO COMPLETE THE WORK IN A CLEAN FUNCTIONAL INSTALLATION THAT IS FULLY COORDINATED WITH ALL OTHER TRADES. ANY PRICING EFFORT SHALL TAKE THESE FACTORS INTO ACCOUNT.

2. MAINTAIN CODE REQUIRED AREA OF SEPARATION FROM OUTSIDE AIR INTAKES TO TERMINATIONS OF EXHAUST, COMBUSTION AIR, PLUMBING VENTS, ETC.

3. COORDINATE EQUIPMENT HOUSEKEEPING PAD DIMENSIONS AND LAYOUT WITH THE GENERAL CONTRACTOR BASED ON FINAL EQUIPMENT SIZES.

4. PROVIDE MANUAL BALANCE DAMPERS IN ALL SUPPLY DUCT BRANCH TAPS DOWNSTREAM OF VAV BOXES.

5. PROVIDE MANUAL BALANCE DAMPERS IN ALL EXHAUST DUCT BRANCH TAPS.

6. PROVIDE TRANSFER "Z" BOOT DUCTS IN FULL HEIGHT WALLS WHERE A PLENUM RETURN SYSTEM IS UTILIZED. BOOTS SHALL BE SIZED TO MAINTAIN A MAXIMUM OF 400 FPM. PROVIDE A GRILLE FOR ALL TRANSFERS IN EXPOSED AREAS. RE: ARCH.

7. COORDINATE SPACE TEMPERATURE SENSORS AND THERMOSTAT LOCATIONS TO ALIGN VERTICALLY WITH LIGHT SWITCHES. PROVIDE COMBINATION TEMPERATURE AND CO SENSORS AT ALL LOATIONS WHERE TEMPERATURE SENSORS ARE SHOWN.

8. TEMPERATURE CONTROLS CONTRACTOR SHALL SUBMIT PLANS INDICATING ALL SPACE TEMPERATURE SENSORS, T-STATS, HUMIDITY SENSORS, ETC. AS PART OF SUBMITTAL PROCESS FOR A/E REVIEW PRIOR TO ROUGH-IN.

9. PROVIDE THROUGH FACE BALANCING FOR ALL DIFFUSERS, REGISTERS, AND GRILLES ABOVE INACCESSIBLE AREAS.

10. PROVIDE TURNING VANES IN ALL 90° DUCT ELBOWS.

11. INSTALL EXPOSED DUCTWORK AS HIGH AS POSSIBLE.

13. ALL DUCT/PIPE PENETRATIONS THROUGH FIRE RATED/SMOKE RATED PARTITIONS SHALL BE CAULKED AND SEALED TO MEET THE RATING REQUIRED. REFER TO LIFE SAFETY DRAWINGS FOR FIRE/SMOKE RATING REQUIREMENTS.

14. REFER TO ACHITECTURAL PLANS FOR SECURE WALL LOCATIONS. IN ADDITION TO THE MANBARS SHOWN ON PLAN PROVIDE MANBARS IN ALL DUCTS LARGER THEN 12"x12" PENETRATING SECURE WALLS.

15. PROVIDE CONDENSATE DRAIN FROM ALL DX EVAPORATOR COILS TO NEAREST MOP SINK OR MECHANICAL ROOM FLOOR DRAIN. PROVIDE CONDENSATE PUMP FOR WALL MOUNTED UNITS AND CONCEALED UNITS THAT CANNOT BE GRAVITY DRAINED TO TERMINATION LOCATION.

KEYNOTES	
M2	DUCT DOWN.

BRINKLEY SARGENT WIGINTON ARCHITECTS

Architect: Brinkley Sargent Wigginton Architects (972) 960-9970
Landscape: Kendall Landscape Architecture (214) 739-3226
Structural: L.A. Fuess Partners, Inc (214) 593-1118
MEP: M-E Engineers (214) 741-1589
Civil: KSA Engineers, Inc (903) 236-7700
Technology: M-E Engineers (303) 421-6656

LONGVIEW POLICE DEPARTMENT

518 W. SOUTH ST. LONGVIEW, TEXAS 75601

History		
#	Date	Description

STATE OF TEXAS
LAUREN F. BERRY
117369
LICENSED
PROFESSIONAL ENGINEER
ME Engineers, Inc.
F-10231
08/19/2020

LEVEL 3 - MECHANICAL PLAN RETURN - EAST

20513
08/19/2020
M332

BID ISSUE

C:\Revit Projects\2018\JPD_CENTRAL_M19_centralpwr-mdPRCUR.rvt
8/14/2020 11:06:15 AM

© 2020 Brinkley Sargent Wiginton Architects, Inc.

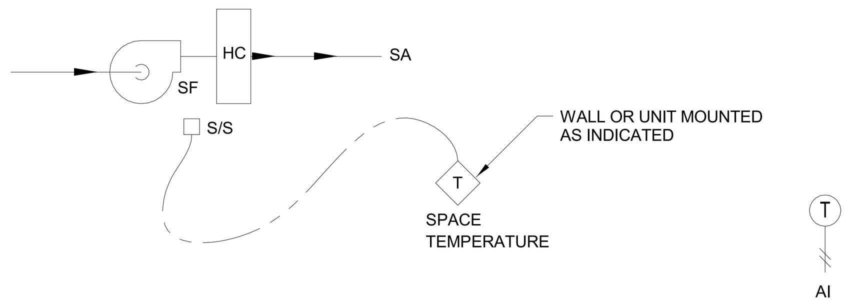

THERMOSTAT SHALL CYCLE FAN & ENERGIZE ELECTRIC HEAT TO MAINTAIN SPACE SETPOINT.

E UNIT HEATER CONTROL

NO SCALE

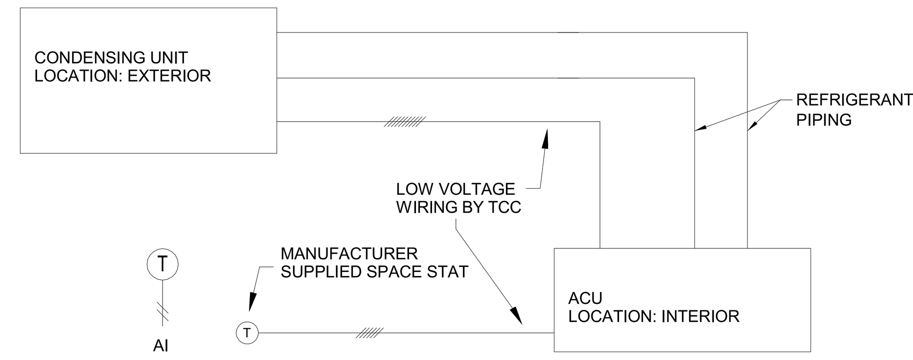

SPLIT SYSTEM CONTROL:

A. THE TC CONTRACTOR IS RESPONSIBLE FOR WIRING ALL LOW VOLTAGE CONTROL WIRING REQUIRED FOR OUTDOOR WIRING.

B. THE TC CONTRACTOR IS RESPONSIBLE FOR MOUNTING THE MANUFACTURER SUPPLIED THERMOSTAT AND WIRING BACK TO THE MANUFACTURER SUPPLIED CONTROLLER.

B SPLIT SYSTEM CONTROL

NO SCALE

CONTROL LEGEND

ABBR	DESCRIPTION	ABBR	DESCRIPTION	ABBR	DESCRIPTION
AFS	AIR FLOW MEASUREMENT STATION	FM	FLOW METER	PT	PRESSURE TRANSMITTER
AI	ANALOG INPUT	FR	FREEZESTAT	RA	RETURN AIR
AO	ANALOG OUTPUT	FS	FLOW SWITCH	RF	RETURN FAN
BDD	BACKDRAFT DAMPER	FSCP	FIREFIGHTER'S SMOKE CONTROL PANEL	S	SPACE TEMPERATURE SENSOR
C	CONTROLLER	FT	FLOW TRANSDUCER	SA	SUPPLY AIR
CC	COOLING COIL	HC	HEATING COIL	SD	SMOKE DETECTOR (BY ELECTRICAL)
CD	CONTROL DAMPER	HH	HIGH LIMIT HUMIDITY SWITCH	SF	SUPPLY FAN
CHR	CHILLED WATER RETURN	HT	HUMIDITY TRANSMITTER	SPT	STATIC PRESSURE TRANSMITTER
CHS	CHILLED WATER SUPPLY	HWR	HOT WATER RETURN	SR	SWITCHING RELAY
COND	CONDENSATE OVERFLOW	HWS	HOT WATER SUPPLY	T	THERMOSTAT
CSEN	CURRENT SENSOR	IR	INTERLOCK RELAY	TT	TEMPERATURE TRANSMITTER
DI	DIGITAL INPUT	M	MOTORIZED CONTROL	TTAB	TEMPERATURE TRANSMITTER W/AVERAGING BULB
DO	DIGITAL OUTPUT	MIN	MINIMUM	V	VALVE
DP	DIFFERENTIAL PRESSURE SWITCH	OA	OUTSIDE AIR	VFD	VARIABLE FREQUENCY DRIVE
F	FILTER ASSEMBLY	P-E	PNEUMATIC ELECTRIC SWITCH	VS	VELOCITY SENSOR
FACP	FIRE ALARM CONTROL PANEL	PHC	PREHEAT COIL	WBT	WET BULB TEMPERATURE TRANSMITTER
FCU	FAN COIL UNIT				

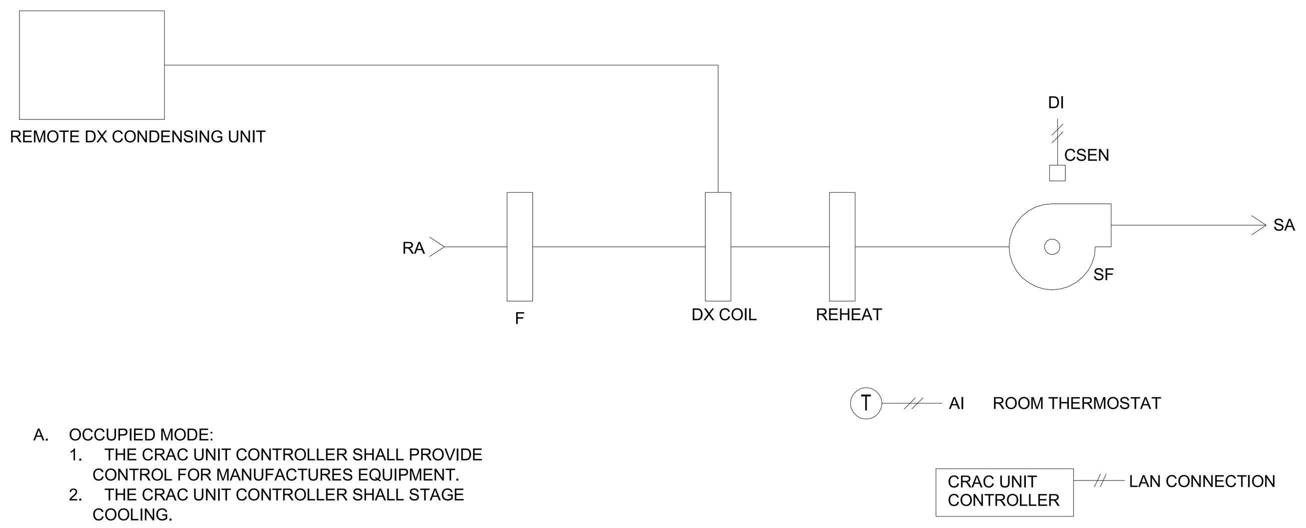

A. OCCUPIED MODE:
1. THE CRAC UNIT CONTROLLER SHALL PROVIDE CONTROL FOR MANUFACTURES EQUIPMENT.
2. THE CRAC UNIT CONTROLLER SHALL STAGE COOLING.

B. SUPPLY FAN:
1. ALARMS SHALL BE PROVIDED AS FOLLOWS:
- SUPPLY FAN FAILURE: COMMANDED ON, BUT THE STATUS IS OFF.
- HIGH SPACE TEMPERATURE: 25% GREATER THAN SETPOINT.
- LOW SPACE TEMPERATURE: 25% LOWER THAN SETPOINT.

B COMUPUTER ROOM AIR CONDITIONING UNIT

NO SCALE

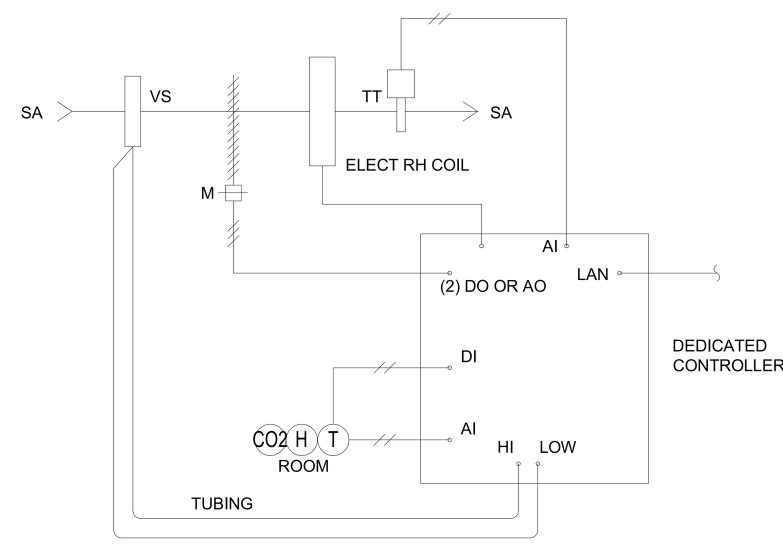

VARIABLE AIR VOLUME (VAV) REHEAT UNITS:
D. ALARMS:

A. OCCUPIED MODE:
1. ON A RISE IN SPACE TEMPERATURE ABOVE THE COOLING SETPOINT, THE UNIT SHALL MODULATE UP TO ITS MAXIMUM CFM TO MAINTAIN SETPOINT. AS SPACE TEMPERATURE DECREASES, THE UNIT SHALL MODULATE DOWN TO ITS MINIMUM COOLING CFM TO MAINTAIN SETPOINT. UPON A FURTHER DECREASE IN SPACE TEMPERATURE, THE UNIT SHALL MODULATE TO ITS FIXED HEATING MINIMUM CFM AND THE ELECT HEAT SHALL MAINTAIN HEATING SETPOINT.
2. FOR UNITS SERVING SPACES EQUIPPED WITH CO2 DETECTORS, ON A RISE IN SPACE CO2 LEVEL ABOVE THE SETPOINT, THE UNIT SHALL MODULATE UP TO ITS MAXIMUM CFM. THE HEATING COIL SHALL THEN MODULATE TO MAINTAIN SPACE TEMPERATURE SETPOINT. UNIT SHALL RETURN TO NORMAL OCCUPIED MODE WHEN CO2 SETPOINT IS SATISFIED.

B. UNOCCUPIED MODE:
1. UNIT'S VOLUME DAMPER SHALL BE FULLY CLOSED.

C. NIGHT SETBACK MODE:
1. REF. AHU CONTROL.
1. ALARM THE TIME, VAV BOX DESIGNATION AND DURATION OF ALL VAV OVER-RIDES.

C VAV BOX WITH ELECTRIC REHEAT CONTROL

NO SCALE

SEQUENCE OF OPERATION GENERAL NOTES:

GENERAL:

A. BMS CONTRACTOR SHALL COORDINATE ALL INTERFACE REQUIREMENTS.

B. ALTHOUGH EACH SEPARATE CONTROL DIAGRAM INDICATES AN OUTDOOR AIR TEMPERATURE SENSOR AND OUTDOOR AIR HUMIDITY SENSOR, TC CONTRACTOR MAY UTILIZE ONE OF EACH SENSOR AS A COMMON INPUT TO THE SYSTEM. COORDINATE LOCATION WITH ARCHITECT/ENGINEER PRIOR TO INSTALLATION.

C. PROVIDE INDIVIDUAL INPUTS OR OUTPUTS FOR EACH POINT LISTED IN THE POINTS LISTS. PROVIDE ANY ADDITIONAL POINTS NOT LISTED IN THE POINTS LIST, BUT REQUIRED TO MEET THE SEQUENCES OF OPERATION, AT NO ADDITIONAL COST TO THE OWNER. ALL ANALOG OUTPUTS SHALL BE 4-20MA, 0-10VDC OR 0-20VDC UNLESS OTHERWISE INDICATED. AO=ANALOG OUTPUT, AI=ANALOG INPUT, DO=DIGITAL (BINARY) OUTPUT, DI=DIGITAL (BINARY) INPUT.

D. ALL SET-POINTS SHALL BE FULLY ADJUSTABLE AT THE OPERATOR WORKSTATION.

E. PROVIDE OVERRIDE CONTROL OF ALL POINTS AT THE OPERATOR WORKSTATION.

F. PROVIDE TWO-HOUR (ADJ.) TIMED OVERRIDE FROM EACH SPACE TEMPERATURE SENSOR OR T'STAT IN NON-PUBLIC AREAS. OVERRIDE NOT REQUIRED FOR PUBLIC SPACES.

G. REFER TO THE SPECIFICATIONS FOR OPERATOR WORKSTATION REQUIREMENTS.

H. IN THE EVENT OF A POWER OUTAGE OR OTHER MALFUNCTION, THE CURRENTLY ENABLED CONTROLS SEQUENCES SHALL BE MAINTAINED- RE: SPECIFICATIONS.

OCCUPANCY SCHEDULES:

I. THE FOLLOWING SPECIAL OCCUPANCY SCHEDULE TYPES ARE HEREBY DEFINED:
1. OCCUPANCY: BASED ON SCHEDULES BY THE OPERATOR.

J. ANY DEVICE UTILIZING ON/OFF CONTROL OR SCHEDULING SHALL BE CAPABLE OF BEING PROGRAMMED TO CONFORM TO ANY OF THESE SCHEDULES.

K. THE BMS SHALL STAGE ROOFTOP UNITS TO/FROM OCCUPIED MODE TO MINIMIZE SUDDEN CHANGES IN SYSTEM FLOW REQUIREMENTS.

L. ALL SETPOINTS SHALL BE FULLY ADJUSTABLE AT THE OPERATOR WORKSTATION.

M. PROVIDE OVERRIDE CONTROL OF ALL POINTS AT THE OPERATOR WORKSTATION.

MISCELLANEOUS NON-DDC CONTROL:

A. REFER TO INDIVIDUAL CONTROL DIAGRAMS FOR ADDITIONAL EQUIPMENT NOT ON BMS.

MISCELLANEOUS DDC CONTROL:

A. PUMPS SHALL OPERATE PER OTHER APPLICABLE CONTROL SECTIONS. BMS SHALL MONITOR ALL PUMPS. DOMESTIC HOT WATER RECIRCULATION PUMP(S) ARE EXCLUDED.

B. REFERENCE MECHANICAL EQUIPMENT SCHEDULES (ESPECIALLY "FANS") FOR ADDITIONAL CONTROL SEQUENCES.

C. EMERGENCY GENERATOR
1. PROVIDE REMOTE COMMUNICATION, MONITORED BY BMS SYSTEM.
2. PROVIDE REMOTE NOTIFICATION OF GENERATOR STARTING TO OPERATIONS PERSONNEL.

D. FANS
1. PROVIDE START, STOP, AND STATUS FOR ALL FANS U.N.O.
2. PROVIDE STATUS ONLY FOR FANS OPERATED VIA LINE VOLTAGE THERMOSTAT.
3. RE: SCHEDULES FOR ADDITIONAL REQUIREMENTS.

E. EXHAUST AND INTAKE DAMPERS
1. RELIEF AND INTAKE LOCATIONS THAT CONTAIN MOTORIZED DAMPERS SHALL INTERLOCK THE POSITION OF THE DAMPER WITH THE OPERATION OF ITS ASSOCIATED EQUIPMENT: WHEN THE EQUIPMENT IS ENABLED, THE DAMPER SHALL BE OPEN, WHEN THE EQUIPMENT IS DISABLED, THE DAMPER SHALL BE CLOSED. ALL DAMPERS TO BE FAST-ACTING OR AN EQUIPMENT DELAY SHALL BE PROVIDED TO PREVENT FULL AIRFLOW PRIOR TO DAMPER REACHING FULL OPEN POSITION. DAMPERS MAY BE UTILIZED AT EQUIPMENT (SUCH AS RTU OA DAMPERS AND RELIEF DAMPERS) RATHER THAN AT EXTERIOR TERMINATION.

FIRE ALARM INTEGRATION CONTROL:

A. FIRE ALARM CONTRACTOR AND TEMPERATURE CONTROL CONTRACTOR SHALL COORDINATE FOR SEAMLESS INTEGRATION REQUIRED FOR EQUIPMENT SHUT DOWN.

B. BUILDING IS EQUIPPED WITH DUCT SMOKE DETECTION. FIRE ALARM SHALL SHUT DOWN ASSOCIATED AIR HANDLING UNITS UPON ACTIVATION OF FIRE ALARM SYSTEM.

EXHAUST FAN CONTROL SEQUENCE:

A. THE SEQUENCE OF OPERATIONS, INPUT/OUTPUT MATRIX AND CONTROL DIAGRAMS ARE ALL COMPLEMENTARY. IF A DEVICE IS CALLED FOR OR IMPLIED IN ONE LOCATION BUT NOT OTHERS, THE CONTRACTOR IS REQUIRED TO PROVIDE THIS POINT.
B. ALL POINTS LISTED IN THE INPUT/OUTPUT MATRIX ARE NOT NECESSARILY DETAILED IN THE CONTROL DIAGRAMS OR SPECIFIED IN THE SEQUENCE.
C. ALL POINTS DETAILED IN THE CONTROL DIAGRAMS ARE NOT NECESSARILY LISTED IN THE INPUT/OUTPUT MATRIX OR SPECIFIED IN THE SEQUENCE.
D. ALL POINTS SPECIFIED IN THE SEQUENCE ARE NOT NECESSARILY LISTED IN THE INPUT/OUTPUT MATRIX OR DETAILED IN THE CONTROL DIAGRAMS
E. GENERALLY, EXHAUST FANS TO BE CONTROLLED PER THE SCHEDULE. FANS INTERLOCKED ON TIME OF DAY, TEMPERATURE, OR IN OCCUPIED MODE SHALL BE CONTROLLED THROUGH THE BMS SYSTEM.
F. REFERENCE SCHEDULES FOR MORE INFORMATION REGARDING FAN CONTROL.
G. PROVIDE A CURRENT SENSOR STATUS ON ALL EXHAUST FANS FOR DDC SYSTEM MONITORING.
H. TEMPERATURE CONTROLLED EXHAUST FANS:
H.A. ENERGIZE EXHAUST FAN ON RISE OF SPACE TEMPERATURE.
H.B. ALARM BMS IF SPACE TEMPERATURE IS +5F ABOVE SET POINT.

I. WALL SWITCH ENERGIZED EXHAUST FANS: ENERGIZE EXHAUST FAN ON WALL SWITCH (BY CONTROL CONTRACTOR)
J. TOILET/LOCKER EXHAUST: INTERLOCK WITH RESPECTIVE AIR HANDLING SYSTEM.
K. VEHICLE STORAGE EXHAUST FANS:
1. ONE EXHAUST FAN TO OPERATE FOR MINIMUM FLOW. REFER TO PLANS AND SCHEDULES FOR WHICH FANS TO OPERATE TO MAINTAIN MINIMUM FLOW. INTAKE THROUGH DOOR LOUVER.
2. ADDITIONAL EXHAUST FAN TO ENERGIZE AND INCREASE AIR FLOW UPON RISE IN CO OR NOx LEVELS IN RESPECTIVE ZONE (RE: PLANS). MONITOR VIA BMS.

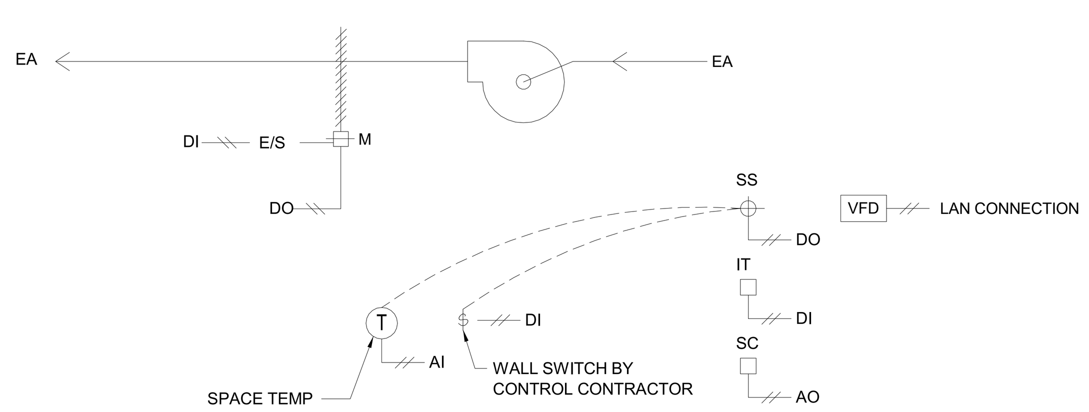

NOTE: NOT ALL DEVICES ARE ASSOCIATED WITH ALL FANS. REFERENCE SCHEDULE MORE INFORMATION.

EXHAUST FAN SERVING GENERAL AREAS:

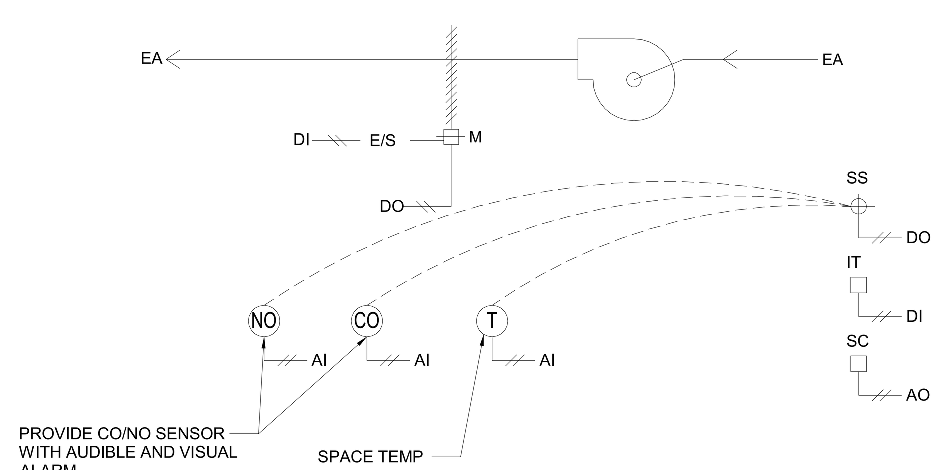

EXHAUST FAN SERVING VEHICLE STORAGE AREAS:

F EXHAUST FAN CONTROL

NO SCALE

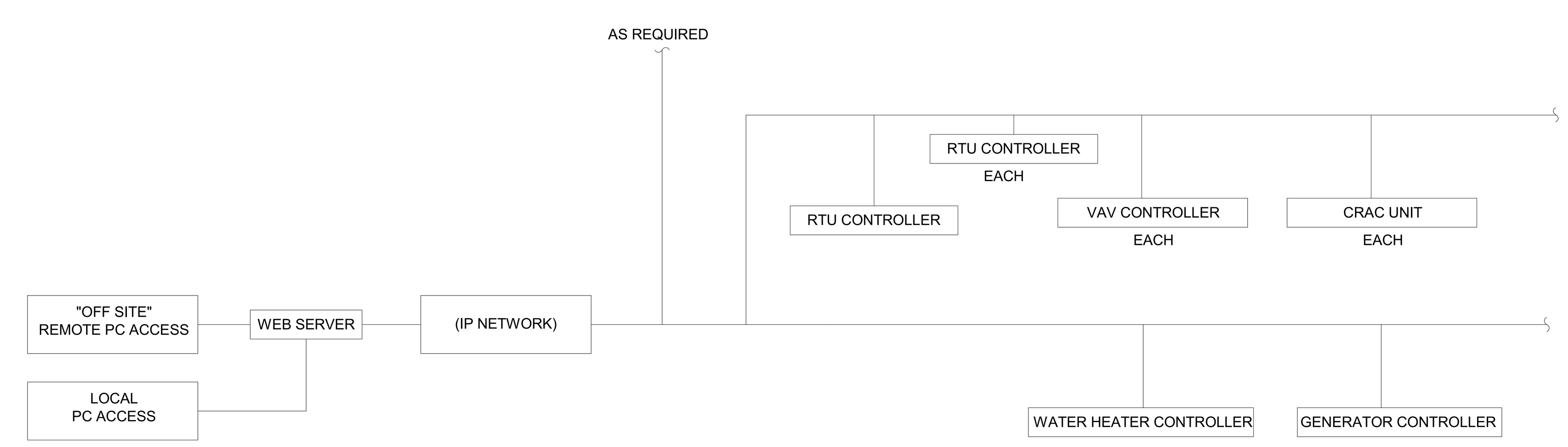

CONTROL SYSTEM ARCHITECTURE

ALL CONTROLS AND SEQUENCES TO BE COORDINATED WITH OWNER

A GENERAL CONTROL

NO SCALE

Architect: Brinkley Sargent Wiginton Architects (972) 960-9970
Landscape: Kendall Landscape Architecture (214) 739-3226
Structural: L.A. Fuess Partners, Inc (214) 593-1118
MEP: M-E Engineers (214) 741-1589
Civil: KSA Engineers, Inc (903) 236-7700
Technology: M-E Engineers (303) 421-6656

BRINKLEY SARGENT WIGINTON ARCHITECTS

LONGVIEW POLICE DEPARTMENT

518 W. SOUTH ST. LONGVIEW, TEXAS 75601

History

#	Date	Description

STATE OF TEXAS
LAUREN F. BERRY
117369
LICENSED
PROFESSIONAL ENGINEER
ME Engineers, Inc.
F-10231
08/19/2020

MECHANICAL CONTROLS

20513
08/19/2020
M401

BID ISSUE

C:\Revit Projects\2019\LPD_CENTRAL_M19_christopher.hallPZCUX.rvt
8/14/2020 11:05:16 AM

© 2020 Brinkley Sargent Wigginton Architects, Inc.

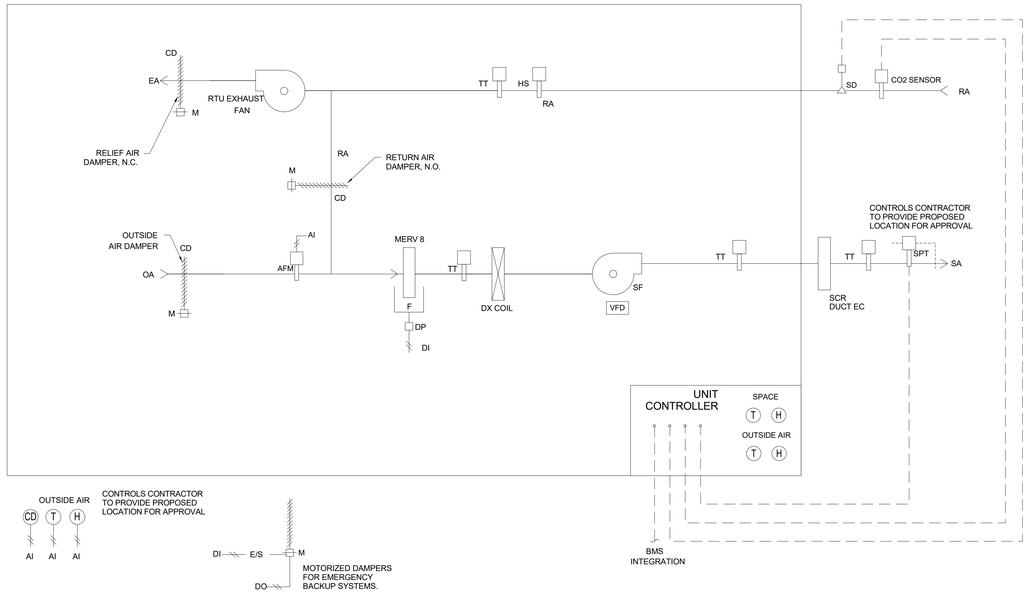

1. OPERATING MODE:
   - IF COMMUNICATION WITH THE BAS IS LOST, THE RTU CONTROLLERS SHALL USE THEIR DEFAULT SETPOINTS AND OPERATE IN THE OCCUPIED MODE.
   - THE FANS SPEED SHALL SLOWLY RAMP FROM ZERO TO THE FINAL DUCT STATIC PRESSURE SET POINT.
   - THE SUPPLY FANS SPEED SHALL MODULATE TO MAINTAIN THE DUCT STATIC PRESSURE SET POINT AS DETERMINED BY THE CONTRACTOR (ADJUSTABLE). THE SUPPLY FANS SPEED SHALL NOT DROP BELOW 20% (ADJUSTABLE).
   - A HIGH LIMIT SHALL DE-ENERGIZE THE SUPPLY FANS WHENEVER THE SUPPLY DUCT STATIC PRESSURE EXCEEDS 125% OF SET POINT (ADJUSTABLE).
   - MODULATE THE RELIEF AIR FAN AND DAMPERSTO MAINTAIN SPACE DIFFERENTIAL PRESSURE SETPOINT 0.1" WC (ADJ.). AND TO PROVIDE AIR ECONOMIZER CONTROL BASED ON SUPPLY AIR TEMPERATURE DISCHARGE.
3. UNOCCUPIED MODE:
   - WHEN THE RTU IS IN THE UNOCCUPIED MODE, THE SUPPLY AND RETURN FANS SHALL BE OFF. THE OUTSIDE AIR AND RELIEF AIR DAMPERS SHALL BE CLOSED, COMPRESSORS SHALL BE OFF. THE HEATING GAS VALVE SHALL BE CLOSED, UNLESS NIGHT SETBACK OVERRIDES.
   - DE-ENERGIZE ASSOCIATED EXHAUST FANS.
4. NIGHT SETBACK MODE:
   - CYCLE SUPPLY FAN TO MAINTAIN SET-BACK SPACE TEMPERATURE SETPOINT.
   - RELIEF AIR AND O.A. DAMPERS SHALL BE CLOSED.
   - COOLING SHALL BE AVAILABLE WITH OFFSET.
   - MAINTAIN A 6°F (ADJ.) OFFSET TO SETPOINT. OPEN HEATING VALVE FULLY AND ENERGIZE FANS AT OFFSET. RUN UNTIL SETPOINT IS REACHED, THEN DE-ENERGIZE FANS, CLOSE HEATING VALVE OR SHUT-OFF COMPRESSORS.
   - DE-ENERGIZE ASSOCIATED EXHAUST FANS.
5. MORNING WARM-UP MODE:
   - SUPPLY FAN SHALL RUN CONTINUOUSLY AND BE ENERGIZED ONE HOUR (ADJ. THROUGH OPTIMIZED START) PRIOR TO SCHEDULED OCCUPIED MODE START. ENERGIZE HEATING TO WARM-UP OCCUPIED SPACE TO OCCUPIED SETPOINT OF SPACE STAT.
   - O.A. AND RELIEF AIR DAMPERS SHALL BE CLOSED.
   - REVERT TO OCCUPIED MODE WHEN SPACE STAT HAS REACHED OCCUPIED HEATING SETPOINT.
6. DEMAND CONTROL VENTILATION:
   - WHEN THE UNIT IS IN THE OCCUPIED MODE, THE OUTDOOR-AIR (OA) DAMPER OPENS TO THE DCV MIN POSITION SETPOINT.
   - IF THE SPACE CO2 LEVEL IS LESS THAN OR EQUAL TO THE LOWER LIMIT CO2 SETPOINT, THE OA DAMPER WILL CLOSE TO THE DCV MIN POSITION SETPOINT.
   - IF THE SPACE CO2 LEVEL IS GREATER THAN OR EQUAL TO THE UPPER LEVEL CO2 SETPOINT, THE OA DAMPER WILL OPEN TO THE DESIGN MIN POSITION SETPOINT.
   - IF THE SPACE CO2 LEVEL IS GREATER THAN THE LOWER LIMIT CO2 SETPOINT AND LESS THAN THE UPPER LIMIT CO2 SETPOINT, THE OA DAMPER POSITION IS MODULATED PROPORTIONALLY BETWEEN THE DCV MIN AND THE DESIGN MIN POSITION SETPOINTS.
   - IF THERE IS A CALL FOR ECONOMIZER COOLING, THE OUTDOOR AIR DAMPER MAY BE OPENED FURTHER TO SATISFY THE COOLING REQUEST.
7. ECONOMIZER CONTROL:
   - WHEN THE OUTSIDE AIR ENTHALPY IS LESS THAN THE RETURN AIR ENTHALPY AND COOLING IS REQUIRED, THE ECONOMIZER CONTROL SHALL BE ENABLED. THE OUTSIDE AIR DAMPERS SHALL MODULATE BETWEEN THE ADJUSTABLE MINIMUM POSITION AND FULL OPEN TO MAINTAIN THE DISCHARGE AIR TEMPERATURE (BASED ON RESET CONTROL) AT THE ECONOMIZER SETPOINT. COOLING VIA THE DX COOLING COIL SHALL BE ALLOWED TO RUN WITH THE OUTSIDE AIR DAMPERS FULLY OPEN AS LONG AS OUTSIDE AIR ENTHALPY IS LESS THAN RETURN AIR ENTHALPY. HEATING SHALL BE LOCKED OUT UNTIL OUTSIDER AIR DAMPER HAS RETURNED TO THE MINIMUM VENTILATION POSITION. WHEN OUTSIDE AIR ENTHALPY EXCEEDS RETURN AIR ENTHALPY, ECONOMIZER CONTROL SHALL BE DISABLED. UNIT CONTROLLER SHALL CALCULATE ENTHALPY CONDITIONS.
8. DISCHARGE AIR TEMPERATURE:
   - MODULATE RTU COOLING AND DUCT ELECTRIC HEATING COIL TO MAINTAIN DISCHARGE AIR TEMPERATURE OF 55(ADJ).
9. HEATING CONTROL:
   - THE HEATING COIL SHALL MODULATE TO MAINTAIN THE D.A.T. (ADJ.). THE HEATING COIL SHALL BE OFF IF FANS ARE OFF.
10. COOLING CONTROL:
   - THE COMPRESSORS SHALL MODULATE TO MAINTAIN THE DISCHARGE AIR TEMPERATURE (ADJ.). IF THE ECONOMIZER CONTROL IS ENABLED AND THE OUTSIDE AIR DAMPERS ARE NOT FULLY OPEN, THE COMPRESSORS SHALL BE OFF. THE COMPRESSOR SHALL BE OFF IF THE AIR HANDLERS ARE IN THE HEATING MODE, THE FANS ARE OFF, OR THE DISCHARGE AIR SENSORS HAVE FAILED.
   - PACKAGED MICROPROCESSOR SHALL STAGE COMPRESSORS AND MODULATE HOT GAS RE-HEAT TO MAINTAIN DISCHARGE AIR TEMP AND HUMIDITY LEVELS.
12. DEHUMIDIFICATION:
   - THE CONTROLLER SHALL MEASURE THE RETURN AIR HUMIDITY AND OVERRIDE THE COOLING SEQUENCE TO MAINTAIN RETURN AIR HUMIDITY AT OR BELOW 60% RH (ADJ).
   - UPON RISE IN RETURN OR SPACE HUMIDITY THE CONTROLLER SHALL MODULATE COMPRESSORS TO MAINTAIN DISCHARGE AIR TEMPERATURE OF 52F.
13. SMOKE DETECTORS:
   - SMOKE DETECTORS PROVIDED UNDER DIVISION 16. WIRE FROM NC AUXILIARY CONTROLS TO SUPPLY AND RETURN FOR START CIRCUITS TO SHUTDOWN FANS UPON DETECTION OF PRODUCTS OF COMBUSTION.
13. FAN SAFETY CONTROLS:
   - DE-ENERGIZE THE SUPPLY FAN WHENEVER THE STOP/AUTO INTERLOCK IS OPEN OR DISCHARGE AIR LOW LIMIT IS TRIPPED, THE HIGH STATIC LIMIT HAS TRIPPED, A SMOKE DETECTOR HAS TRIPPED, OR THE SUPPLY FAN STATUS INDICATES A FAILURE (AFTER A TWO MINUTE DELAY). THE SMOKE DETECTORS, AND FAN FAILURES REQUIRE A MANUAL RESET.
   - DE-ENERGIZE THE SUPPLY AND RETURN FANS WHEN THE DISCHARGE STATIC PRESSURE HIGH-LIMIT REACHES 4.0 INCHES WC (ADJ.). ALARM THE BMS WITH AN APPROPRIATE ALARM MESSAGE.
14. EMERGENCY BACK UP:
   - UPON LOSS OF POWER AND ACTIVATION OF GENERATOR ONLY 1 RTU (RTU-2 OR RTU-3) SHALL BE ALLOWED TO RUN .
   - RTU-1 DISPATCH BACKUP SYSTEM: PROVIDE OPEN CLOSE CONTROL OF ASSOCIATED MOTORIZED DAMPERS FOR OWNER CONTROL THROUGH BMS INTERFACE.
   - RTU-2/3 BACKUP SYSTEM: PROVIDE OPEN CLOSE CONTROL OF ASSOCIATED MOTORIZED DAMPERS FOR OWNER CONTROL THROUGH BMS INTERFACE.
   - ALL RTUS SHALL BE SHUT DOWN PRIOR TO REVERSING MOTORIZED DAMPER POSITION.

A

NO SCALE

Architect: Brinkley Sargent Wigginton Architects (972) 960-9970
Landscape: Kendall Landscape Architecture (214) 739-3226
Structural: L.A. Fuess Partners, Inc (214) 593-1118
MEP: M-E Engineers (214) 741-1589
Civil: KSA Engineers, Inc (903) 236-7700
Technology: M-E Engineers (303) 421-6656

BRINKLEY SARGENT WIGINTON ARCHITECTS

LONGVIEW POLICE DEPARTMENT

518 W. SOUTH ST. LONGVIEW, TEXAS 75601

History

#	Date	Description

ME Engineers, Inc.
F-10231
08/19/2020

MECHANICAL CONTROLS

BID ISSUE

20513
08/19/2020

M402

8/19/2020 11:05:16 AM

C:\Revit Projects\2019\RL_CENTRAL_M19_mmalpine.rvt#PZCLK.rvt

© 2020 Brinkley Sargent Wigginton Architects, Inc.

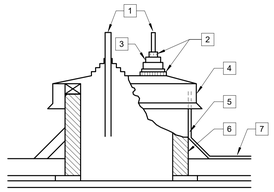

DETAIL NOTES:

1. RIGERANT LINES,GAS PIPE, ETC. PASSING THRU. WALL TO EQUIPMENT
2. STAINLESS STEEL DRAWBANDS
3. RUBBER BOOTS
4. A.I.B.S. COVER
5. FLASHING
6. PREFAB CURB
7. SIDE WALL LINE

9 ROOF CURB FOR REFRIGERANT, GAS AND CONDUIT PENETRATIONS
NO SCALE

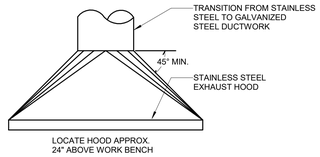

11 FUME EXHAUST HOOD DETAIL
NO SCALE

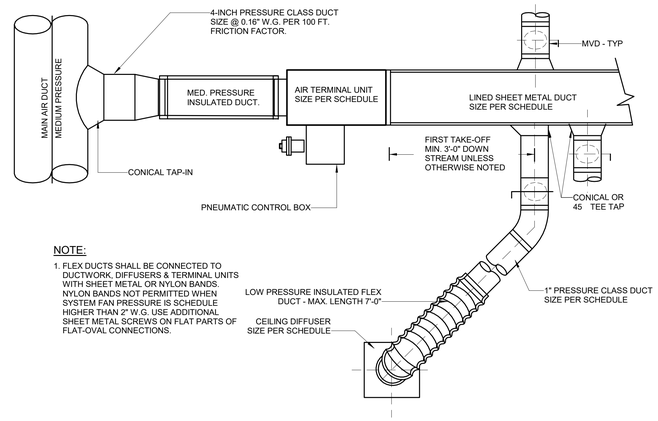

NOTE:

1. FLEX DUCTS SHALL BE CONNECTED TO DUCTWORK, DIFFUSERS & TERMINAL UNITS WITH SHEET METAL OR NYLON BANDS. NYLON BANDS NOT PERMITTED WHEN SYSTEM FAN PRESSURE IS SCHEDULE HIGHER THAN 2" W.G. USE ADDITIONAL SHEET METAL SCREWS ON FLAT PARTS OF FLAT-OVAL CONNECTIONS.

6 SINGLE DUCT AIR TERMINAL UNIT
NO SCALE

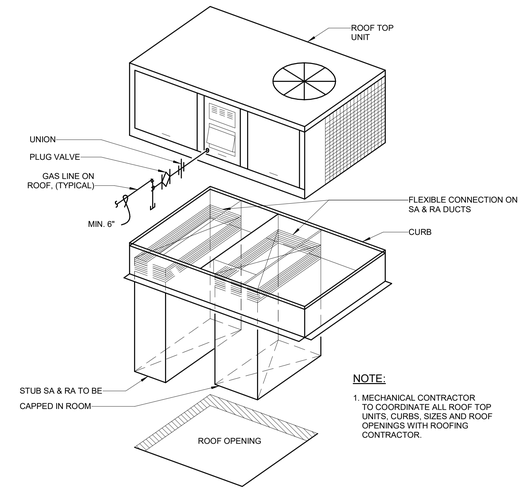

NOTE:

1. MECHANICAL CONTRACTOR TO COORDINATE ALL ROOF TOP UNITS, CURBS, SIZES AND ROOF OPENINGS WITH ROOFING CONTRACTOR.

3 ROOFTOP UNIT AND CURB DETAIL
NO SCALE

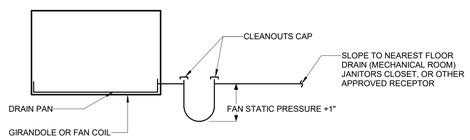

NOTE:

1. INSULATE CONDENSATE DRAIN WHEN ABOVE CEILINGS.

10 CONDENSATE DRAIN DETAIL
NO SCALE

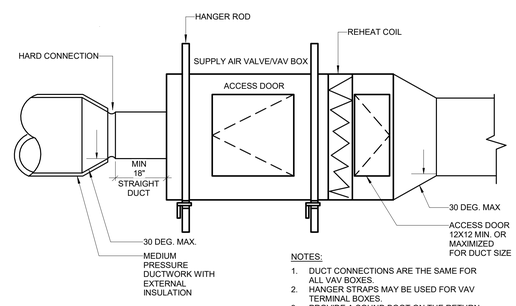

NOTES:

1. DUCT CONNECTIONS ARE THE SAME FOR ALL VAV BOXES.
2. HANGER STRAPS MAY BE USED FOR VAV TERMINAL BOXES.
3. PROVIDE A SOUND BOOT ON THE RETURN AIR INTAKE OF ALL FAN POWERED VAV BOXES.
4. FLEX CONNECTION PERMITTED AT INLET. VERIFY INLET CONFIGURATION WITH MANUFACTURER.

5 VAV BOX DETAIL-1
NO SCALE

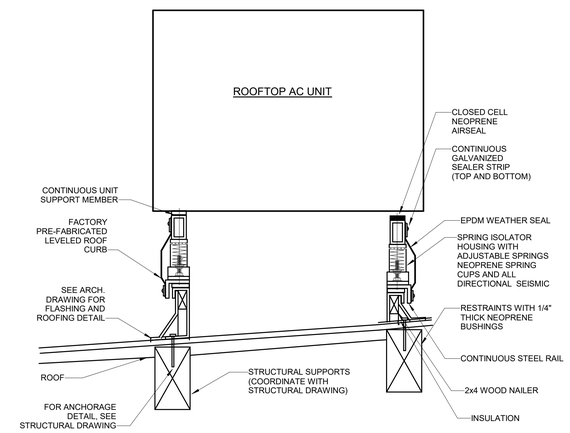

2 ROOFTOP AC UNIT SUPPORT & VIBRATION ISOLATION SYSTEM
NO SCALE

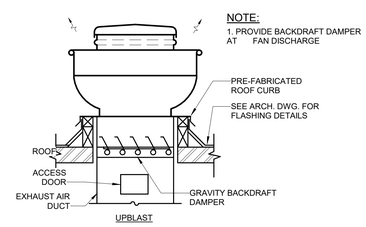

NOTE:

1. PROVIDE BACKDRAFT DAMPER AT FAN DISCHARGE

8 EXHAUST AIR FAN INSTALLATION (FOR GENERAL APPLICATION)
NO SCALE

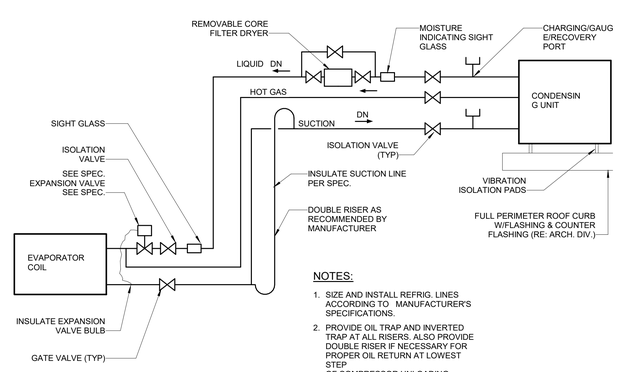

NOTES:

1. SIZE AND INSTALL REFRIG. LINES ACCORDING TO MANUFACTURER'S SPECIFICATIONS.
2. PROVIDE OIL TRAP AND INVERTED TRAP AT ALL RISERS. ALSO PROVIDE DOUBLE RISER IF NECESSARY FOR PROPER OIL RETURN AT LOWEST STEP OF COMPRESSOR UNLOADING.
3. PITCH REFRIGERANT LINES IN DIRECTION INDICATED @ 1/2" PER 10FT.
4. ALL CONNECTIONS SHALL BE BRAZED INCLUDING CONNECTIONS AT COIL AND CONDENSING UNIT.

4 SPLIT SYSTEM AC UNIT DETAIL
NO SCALE

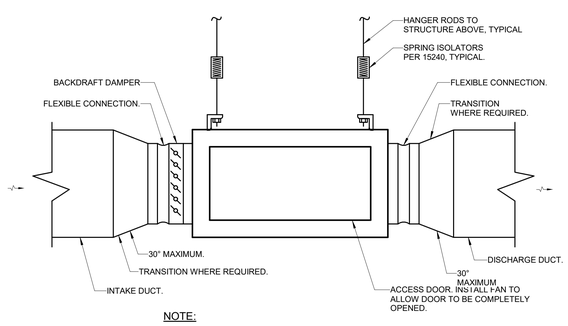

NOTE:

1. INSTALL FAN WITH PROPER SERVICE CLEARANCE TO MOTOR AND ALL PARTS FOR PROPER AIR MOVEMENT AS RECOMMENDED BY THE MANUFACTURER.

7 INLINE FAN DETAIL
NO SCALE

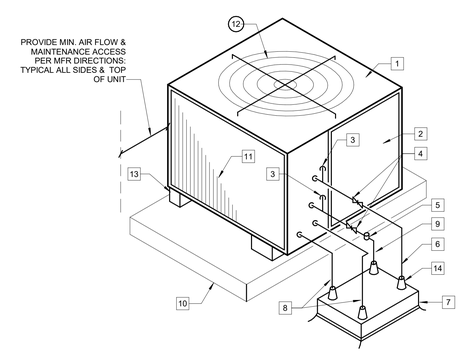

DETAIL NOTES :

1. CONDENSING UNIT
2. COMPRESSOR ACCESS
3. REFRIGERANT GAUGE CONNECTIONS.
4. BACK-SEATED REFRIGERANT VALVE.
5. SIGHT GLASS WITH MOISTURE INDICATOR.
6. SUCTION LINE WITH INSULATION.
7. ROOF CAP AND CURB.
8. CONDUIT - POWER AND CONTROL.
9. REFRIGERANT LIQUID LINE
10. FULL PERIMETER ROOF CURB WITH SHEET METAL CAP.
11. CONDENSER COIL.
12. FAN GUARD.
13. VIBRATION ISOLATORS.
14. FLASH PENETRATION WATER TIGHT SEE DETAIL.

NOTES :

1. REFRIGERANT LIQUID LINE & SUCTION LINE TO BE SIZED PER MANUFACTURER'S RECOMMENDATIONS.
2. PROVIDE OIL TRAPS AT RS LOW POINTS AND/OR PITCH HORIZONTAL PIPING FOR PROPER OIL RETURN.

1 AIR-COOLED CONDENSING UNIT
NO SCALE

BRINKLEY SARGENT WIGINTON ARCHITECTS

Architect: Brinkley Sargent Wigginton Architects (972) 960-9970
Landscape: Kendall Landscape Architecture (214) 739-3226
Structural: L.A. Fuess Partners, Inc (214) 593-1118
MEP: M-E Engineers (214) 741-1589
Civil: KSA Engineers, Inc (903) 236-7700
Technology: M-E Engineers (303) 421-6656

LONGVIEW POLICE DEPARTMENT

518 W. SOUTH ST. LONGVIEW, TEXAS 75601

History		
#	Date	Description

STATE OF TEXAS
LAUREN F. BERRY
117369
LICENSED PROFESSIONAL ENGINEER
ME Engineers, Inc.
F-10231
08/19/2020

MECHANICAL DETAILS

20513
08/19/2020
M501

BID ISSUE

8/14/2020 11:05:18 AM

C:\Revit Projects\2019\LPD_CENTRAL_MTG_christopher.sullivan.rvt

© 2020 Brinkley Sargent Wigintion Architects, Inc.

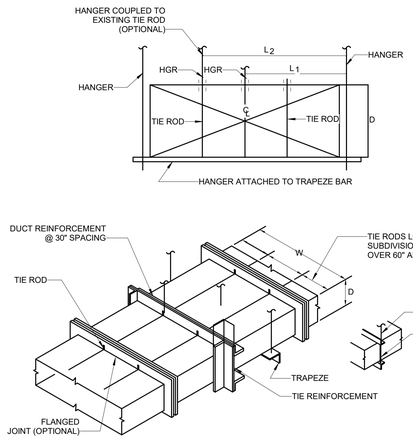

14 LARGE DUCT REINFORCEMENT DETAIL
NO SCALE

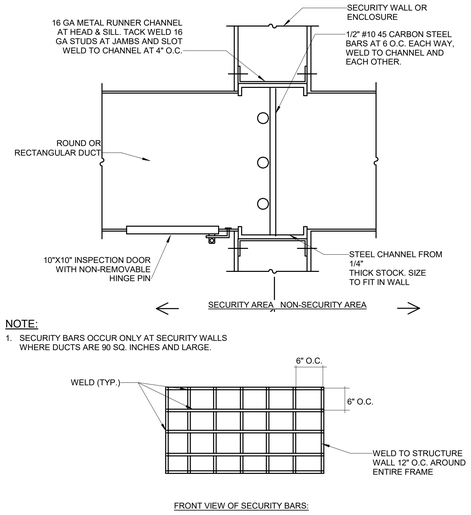

NOTE:
1. SECURITY BARS OCCUR ONLY AT SECURITY WALLS WHERE DUCTS ARE 90 SQ. INCHES AND LARGE.

FRONT VIEW OF SECURITY BARS:

9 DUCT PENETRATION THROUGH SECURITY WALL
NO SCALE

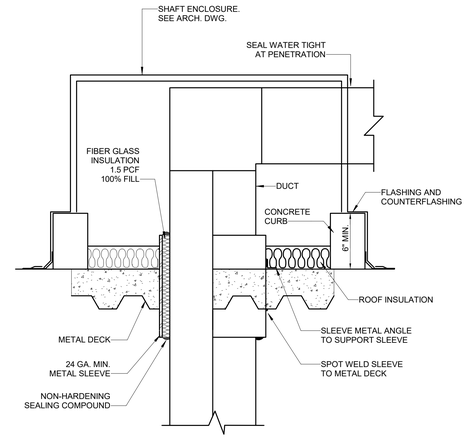

8 DUCT PENETRATION THROUGH ROOF 2
NO SCALE

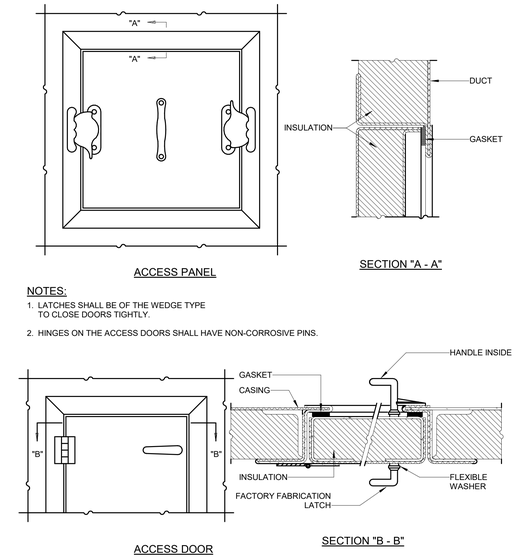

NOTES:
1. LATCHES SHALL BE OF THE WEDGE TYPE TO CLOSE DOORS TIGHTLY.
2. HINGES ON THE ACCESS DOORS SHALL HAVE NON-CORROSIVE PINS.

1 ACCESS PANEL AND ACCESS DOOR
NO SCALE

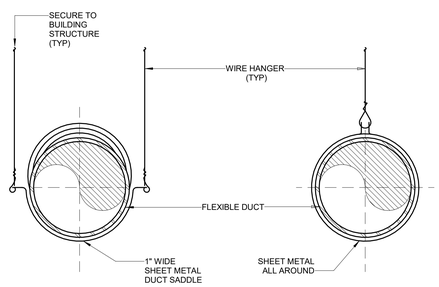

NOTE:
1. SUPPORT AT 3' MAX.

13 FLEXIBLE DUCT SUPPORT
NO SCALE

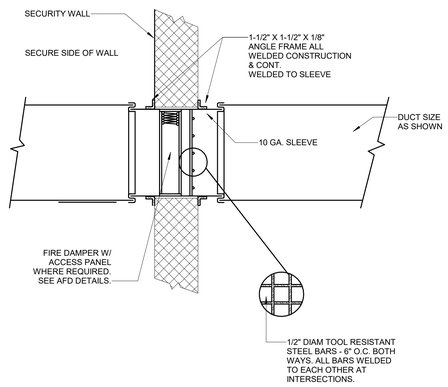

11 DUCT WITH FIRE DAMPER PENETRATION THROUGH SECURITY WALL
NO SCALE

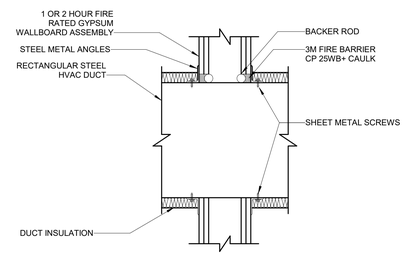

NOTE:
1. UL SYSTEM NO. WL7008

7 DUCT PENETRATION THROUGH ONE OR TWO HOUR FIRE RELATED WALL
NO SCALE

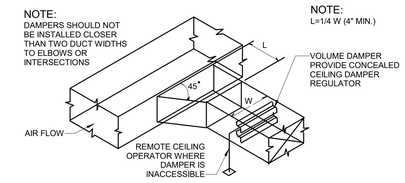

2 BRANCH DUCT TAKE-OFF DETAIL
NO SCALE

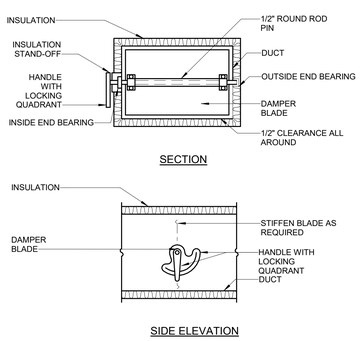

NOTES:
1.DELETE INSULATION STAND-OFF ON DUCTWORK WITHOUT EXTERIOR INSULATION.
2.DETAIL SHOWS SINGLE BLADE DAMPER. DAMPER INSTALLATION SHALL BE SIMILAR FOR MULTI-BLADE DAMPERS AND ROUND DAMPERS.

15 VOLUME DAMPER
NO SCALE

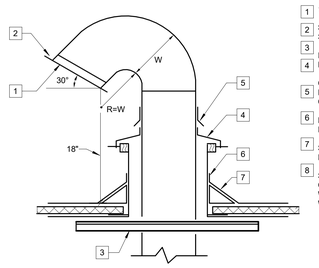

DETAIL NOTES::EN
1. 1(1/2)X1(1/2)" ANGLE
2. SUPPORT DUCT FROM STRUCTURE.
3. FLASHING, ALL SEAMS WELDED. DO NOT ATTACH TO DUCT.
4. COUNTER FLASHING. FASTEN TO DUCT AND SEAL W/SILICONE CAULK.
5. PRE-FAB CURB ATTACHED TO ROOF DECK (NOT INSULATION).
6. SEE ARCH FOR CANT AND ROOFING REQUIREMENTS.
7. SMACNA 2" PRESSURE CLASS CONSTRUCTION SEAMS SEALED WITH UNITED McGILL UNI-WEATHER OR EQUAL

10 DUCT THROUGH ROOF DETAIL
NO SCALE

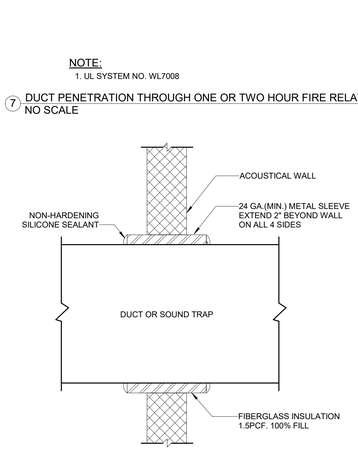

6 DUCT PENETRATION THROUGH ACOUSTICAL WALL
NO SCALE

3 CEILING DIFFUSER DETAIL
NO SCALE

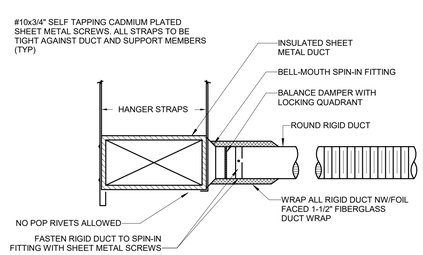

12 FLEX DUCT/ SPIN-IN FITTING DETAIL
NO SCALE

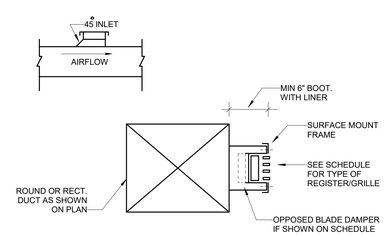

5 DUCT MOUNTED AIR DEVICE DETAIL
NO SCALE

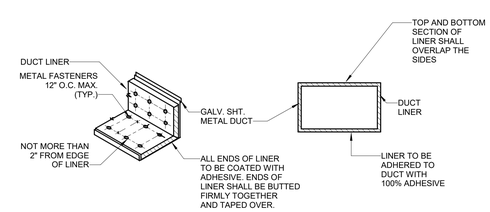

4 DUCT LINER DETAIL
NO SCALE

Architect: Brinkley Sargent Wigintion Architects (972) 960-9970
Landscape: Kendall Landscape Architecture (214) 739-3226
Structural: L.A. Fuess Partners, Inc (214) 593-1118
MEP: M-E Engineers (214) 741-1589
Civil: KSA Engineers, Inc (903) 236-7700
Technology: M-E Engineers (303) 421-6656

BRINKLEY SARGENT WIGINTON ARCHITECTS

LONGVIEW POLICE DEPARTMENT

518 W. SOUTH ST. LONGVIEW, TEXAS 75601

History		
#	Date	Description

STATE OF TEXAS
LAUREN F. BERRY
117369
LICENSED
PROFESSIONAL ENGINEER
ME Engineers, Inc.
F-10231
08/19/2020

MECHANICAL DETAILS

BID ISSUE

20513
08/19/2020
M502

8/14/2020 11:05:19 AM

C:\Revit Projects\2015\RL_CENTRAL_MYB_christopher.hoff2CLX.rvt

© 2020 Brinkley Sargent Wigginton Architects, Inc.

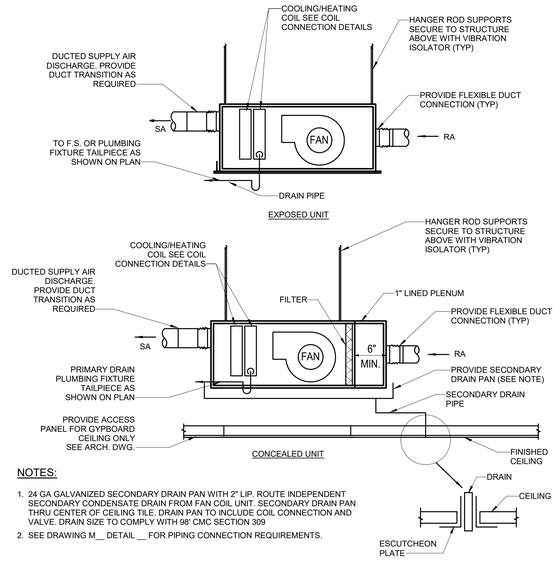

NOTES:

1. 24 GA GALVANIZED SECONDARY DRAIN PAN WITH 2" LIP. ROUTE INDEPENDENT SECONDARY CONDENSATE DRAIN FROM FAN COIL UNIT. SECONDARY DRAIN PAN THRU CENTER OF CEILING TILE. DRAIN PAN TO INCLUDE COIL CONNECTION AND VALVE. DRAIN SIZE TO COMPLY WITH 98' CMC SECTION 309
2. SEE DRAWING M__ DETAIL __ FOR PIPING CONNECTION REQUIREMENTS.

12 FAN COIL UNIT INSTALLATION
NO SCALE

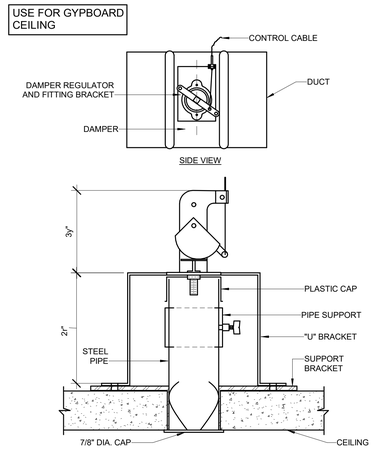

NOTES:

1. PROVIDE REMOTE MANUAL VOLUME DAMPER REGULATOR FOR THE MANUAL VOLUME DAMPER LOCATED ABOVE INACCESSIBLE CEILING AND AT LOCATION NOT READILY ACCESSIBLE.
2. LOCATE DAMPER REGULATOR AT LOCATION AS SHOWN ON PLANS AND COORDINATE WITH REFLECTED CEILING PLANS.

10 REMOTE MANUAL VOLUME DAMPER REGULATOR GYPBOARD CEILING
NO SCALE

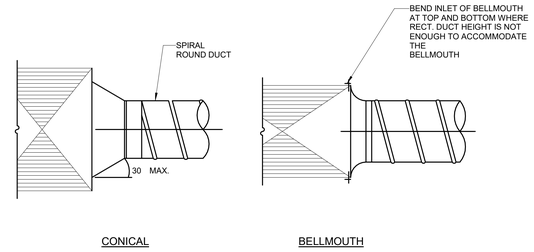

NOTES:

1. SECURE ALL CONNECTIONS TO COMPLY WITH THE REQUIREMENTS OF THE PRESSURE CLASS SPECIFIED.
2. SUPPLY ROUND DUCT TAKE-OFF IS SHOWN. RETURN/EXHAUST SIMILAR.
3. "SPIN-INS" PERMITTED ONLY W/DUCT CONSTRUCTION OF 2" W.C. OR LESS.

6 ROUND DUCT TAKE OFF CONNECTIONS TO RECTANGULAR DUCT
NO SCALE

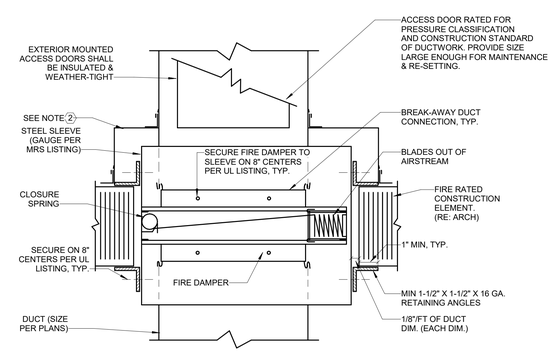

NOTES:

1. REFER TO FIRE DAMPER MANUFACTURER'S INSTALLATION DETAILS. CONFORM TO MOST STRINGENT REQUIREMENT IF THIS DETAIL CONFLICTS WITH UL LISTING INSTALLATION INSTRUCTIONS.
2. PROVIDE MIN 14" HO CURB WITH FLASHING & COUNTERFLASHING @ ROOF & DUCT FOR PENETRATIONS THRU ROOFS

3 HORIZONTAL FIRE DAMPER DETAIL
NO SCALE

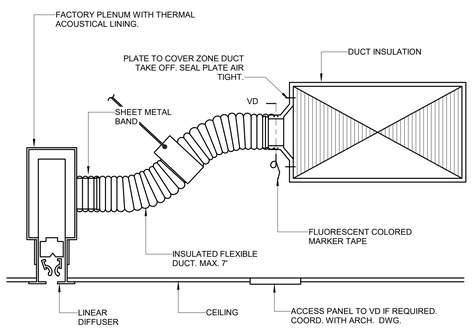

11 LINEAR DIFFUSER CONNECTION USE IN NON-HOSPITAL
NO SCALE

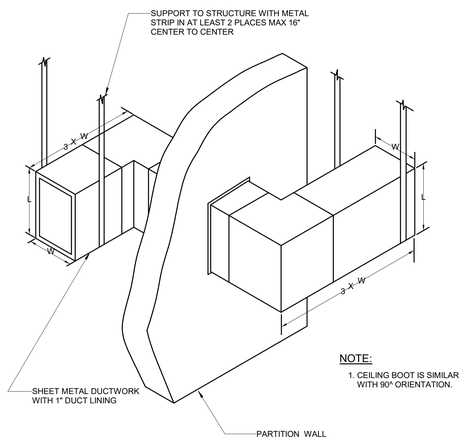

NOTE:

1. CEILING BOOT IS SIMILAR WITH 90^ ORIENTATION.

7 PARTITION RETURN AIR BOOT DETAIL
NO SCALE

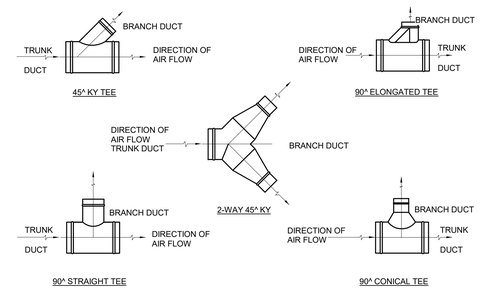

5 ROUND DUCT BRANCH TAKE- OFF DETAIL
NO SCALE

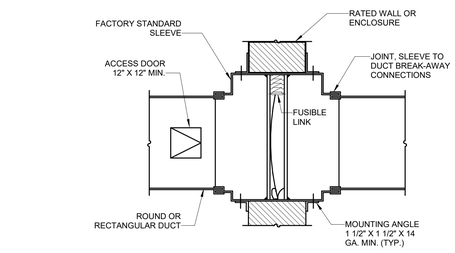

NOTES:

1. DYNAMIC FIRE DAMPER SHALL BE USED.
2. FIRE DAMPERS SHALL BE INSTALLED STRICTLY PER MANUFACTURER'S PRINTED INSTRUCTIONS. (RUSKIN DIBD2 STYLE C SFM LISTING NO. 3225-245:005)
3. FIRE DAMPERS SHALL COMPLY WITH THE REQUIREMENTS OF CBC SECTION 713.
4. MANUFACTURER'S INSTALLATION INSTRUCTIONS SHALL BE MADE AVAILABLE TO INSPECTING AUTHORITIES.

2 FIRE DAMPER
NO SCALE

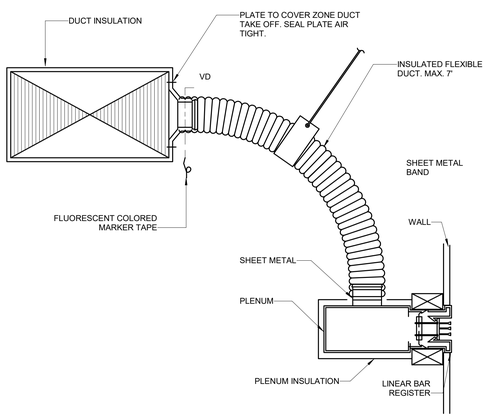

9 SIDEWALL REGISTER CONNECTION USE IN NON-HOSPITAL
NO SCALE

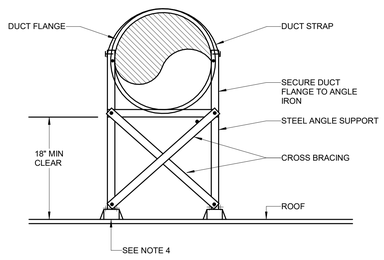

NOTES:

1. DUCT SUPPORT MUST COMPLY WITH APPLICABLE CODES.
2. PROVIDE LATERAL BRACING AS REQUIRED.
3. ROUND DUCT SHOWN. SQUARE AND RECTANGULAR DUCTS SIMILAR.
4. PROVIDE PACKAGED GALVANIZED STEEL EQUIPMENT SLEEPERS WITH CANTS AND FLANGES SECURELY AFFIXED TO ROOF STRUCTURE, INTEGRATED SLEEPERS INTO ROOF MEMBRANE SUCH THAT THE SLEEPERS ARE ANCHORED TO STRUCTURE AND COMPLETELY WATER SEALED. ANCHOR SUPPORTS TO METAL SLEEPERS TO METAL SLEEPERS TO PREVENT LATERAL OR VERTICAL MOVEMENT. OBTAIN APPROVAL FROM STRUCTURAL ENGINEER FOR SUPPORT AND ANCHORING METHOD.

8 ROOF DUCT SUPPORT
NO SCALE

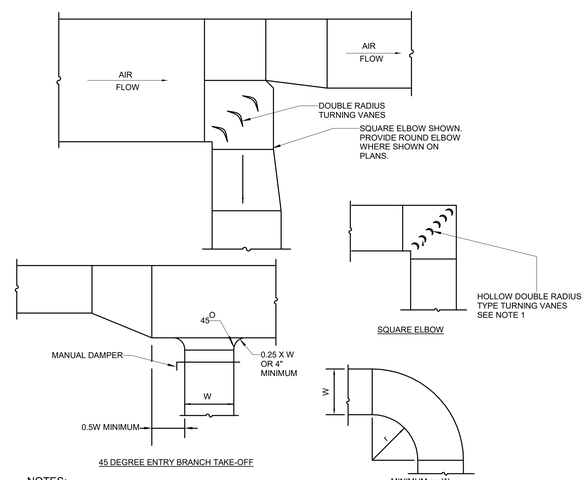

NOTES:

1. FOR DUCT WIDTH LESS THAN 18", USE MINIMUM 26 GA VANES AT 2-1/8" O.C. FOR DUCT 18" AND WIDER, USE MINIMUM 24 GA VANES AT 3-1/4" O.C.
2. FITTINGS TO BE 2 GAGES HEAVIER THAN CONNECTED DUCT.

4 RECTANGULAR DUCT FITTINGS AND TAKE-OFF
NO SCALE

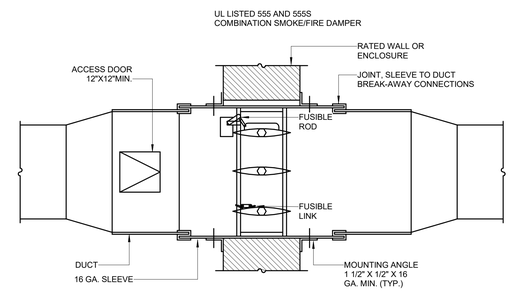

NOTES:

1. DAMPER DETAILS FOR REFERENCE ONLY. REFER TO MANUFACTURER INSTALLATION MANUAL.
2. COMBINATION SMOKE/FIRE DAMPERS SHALL BE STATE FIRE MARSHALL (SF) APPROVED (LISTING NO. 3225-245:102) INSTALLED STRICTLY PER MANUFACTURER'S PRINTED INSTRUCTIONS
3. LABEL ACCESS DOOR "SMOKE/FIRE DAMPER".
4. COMBINATION SMOKE/FIRE DAMPERS SHALL COMPLY WITH THE REQUIREMENTS OF IC.
5. MANUFACTURER'S INSTALLATION INSTRUCTIONS SHALL BE MADE AVAILABLE TO INSPECTING AUTHORITIES.
6. COORDINATE POWER REQUIREMENT AND LOCAL DISCONNECT SWITCH LOCATION WITH DIVISION 16.
7. PROVIDE COMBINATION SMOKE/FIRE DAMPER 4 INCHES LARGER IN LENGTH AND IN WIDTH THAN THE CONNECTING DUCT. PROVIDE CONCENTRIC DUCT TRANSITIONS AS REQUIRED.
8. SEE SPECIFICATION AND SEQUENCE OF CONTROLS UNDER CONTROL DRAWING SECTION FOR DAMPER CONTROL SEQUENCE.

1 COMBINATION SMOKE/FIRE DAMPER
NO SCALE

BRINKLEY SARGENT WIGGINTON ARCHITECTS

Architect: Brinkley Sargent Wigginton Architects (972) 960-9970
Landscape: Kendall Landscape Architecture (214) 739-3226
Structural: L.A. Fuess Partners, Inc (214) 593-1118
MEP: M-E Engineers (214) 741-1589
Civil: KSA Engineers, Inc (903) 236-7700
Technology: M-E Engineers (303) 421-6656

LONGVIEW POLICE DEPARTMENT

518 W. SOUTH ST. LONGVIEW, TEXAS 75601

History		
#	Date	Description

STATE OF TEXAS
LAUREN F. BERRY
117369
LICENSED PROFESSIONAL ENGINEER
ME Engineers, Inc.
F-10231
08/19/2020

MECHANICAL DETAILS

20513
08/19/2020
M503

BID ISSUE

8/14/2020 11:05:21 AM

C:\Users\Projects\2019\LPD_CENTRAL_MFR_Johnson.rvt\M503UK.rvt

© 2020 Brinkley Sargent Wiginton Architects, Inc.

NOTES:

1. ALL EXPOSED RACEWAYS ARE TO BE INSTALLED PARALLEL OR PERPENDICULAR TO WALLS OR STRUCTURAL MEMBERS SUCH THAT THEY FOLLOW STRUCTURAL SURFACE CONTOURS AND SHALL BE INSTALLED SUCH THAT THEY DO NOT OBSTRUCT PASSAGEWAYS OR ACCESS TO EQUIPMENT. MULTIPLE RACEWAYS SHOULD BE INSTALLED GROUPED TOGETHER. THE LOCATION OF PUBLICLY VISIBLE RACEWAYS SHALL BE APPROVED BY THE ARCHITECT PRIOR TO INSTALLATION. (EXTRA TIME SHOULD BE ALLOWED FOR THIS REVIEW AND APPROVAL.)

2. THE DISCONNECTING MEANS FOR ALL MECHANICAL EQUIPMENT SHALL BE ACCESSIBLE AND HAVE THE CLEARANCE IN FRONT AS REQUIRED BY NEC AMENDMENTS.

3. ALL CEILING ATTACHED OBJECTS AND FLOOR ATTACHED EQUIPMENT INCLUDING BUT NOT LIMITED TO PENDANT LIGHTING FIXTURES, GENERAL LIGHTING, MULTIPLE RACEWAYS, GENERATOR, TRANSFORMER ELECTRICAL SWITCHGEAR, AND SWITCHBOARDS SHALL BE INSTALLED IN ACCORDANCE WITH SUPPORTING OBJECTS FOR SEISMIC ZONE AS REQUIRED BY STATE AND LOCAL CODES.

4. ALL SWITCHGEAR, SWITCHBOARDS AND TRANSFORMERS SHALL HAVE A 4 INCH HOUSE KEEPING PAD. UNDER NO CONDITION SHALL THE HIGHEST SWITCH OR BREAKER EXCEED 6'-6" AFF.

5. DATA GIVEN ON THE DRAWINGS IS AS EXACT AS COULD BE SECURED. ABSOLUTE ACCURACY IS NOT GUARANTEED AND THE CONTRACTOR SHALL OBTAIN AND VERIFY EXACT LOCATIONS, MEASUREMENTS, LEVELS, SPACE REQUIREMENTS, POTENTIAL CONFLICTS WITH OTHER TRADES, ETC. AT THE SITE AND SHALL SATISFACTORILY ADAPT HIS WORK TO ACTUAL CONDITIONS AT THE BUILDINGS. THE DRAWINGS ARE DIAGRAMMATICAL IN NATURE AND SHALL NOT BE SCALED. HOWEVER THIS DOES NOT RELIEVE ANY SUB-CONTRACTOR FROM COORDINATING HIS WORK WITH ALL OTHER TRADES AND FROM ADJUSTING HIS WORK AS REQUIRED BY THE ACTUAL CONDITIONS OF THE PROJECT. THE CONTRACTOR SHALL VISIT THE SITE BEFORE SUBMITTING COSTS TO BECOME THOROUGHLY FAMILIAR WITH THE ACTUAL CONDITIONS OF THE PROJECT.

6. COORDINATE AND ADJUST ALL WORK BETWEEN TRADES AND EXISTING CONDITIONS IN ORDER TO ACCOMPLISH A NEAT, INTEGRATED AND EFFICIENT INSTALLATION WHICH INCLUDE BUT ARE NOT LIMITED TO:

   a.EXAMINE THE CONTRACT DOCUMENTS OF ALL TRADES (IE. THE ARCHITECTURAL REFLECTED CEILING PLAN, MECHANICAL HVAC DRAWINGS, ELECTRICAL LIGHTING PLAN, FIRE PROTECTION PLAN, ETC.).

   b. COORDINATE NECESSARY EQUIPMENT, FIXTURES, ETC. SO THAT THE FINAL INSTALLATION IS COMPATIBLE WITH THE MATERIALS AND EQUIPMENT OF THE OTHER TRADES.

   c. THIS CONTRACTOR SHALL ASSIST THE DIVISION 23 CONTRACTOR IN PREPARING SHOP DRAWINGS FOR COORDINATING INSTALLATION OF ALL WORK (IE. LOCATING ALL LIGHTING FIXTURES IN CEILING WITH CEILING CLEARANCES, RACEWAYS, PIPING, EQUIPMENT FOR CLEARANCE THROUGHOUT).

   d. THE ELECTRICAL DRAWINGS INDICATE THE ELECTRICAL REQUIREMENTS FOR A SIGNIFICANT PORTION OF THE MECHANICAL AND PLUMBING SYSTEMS. ADDITIONAL MECHANICAL AND PLUMBING EQUIPMENT IS INDICATED ON THE DIVISION 23 DRAWINGS. REFER TO MECHANICAL DRAWINGS AND SPECIFICATIONS FOR ADDITIONAL INFORMATION. PROVIDE COMPLETE WIRING AND FUSIBLE DISCONNECTING MEANS FOR ALL MECHANICAL AND PLUMBING EQUIPMENT.

7. DEFINITIONS:

   a. "FURNISH" MEANS TO "SUPPLY" AND USUALLY REFERS TO AN ITEM OF EQUIPMENT.

   b. "INSTALL" MEANS TO "SET IN PLACE, CONNECT AND PLACE IN FULL OPERATIONAL ORDER".

   c. "PROVIDE" MEANS TO "FURNISH AND INSTALL".

   d. "EQUIVALENT" MEANS "MEETS THE SPECIFICATIONS OF THE REFERENCE PRODUCT OR ITEM IN ALL SIGNIFICANT ASPECTS." SIGNIFICANT ASPECTS SHALL BE DETERMINED BY THE ENGINEER.

   e. "RE:_____DIVISION", AND SIMILAR EXPRESSIONS MEANS WORK TO BE PERFORMED UNDER THE CONTRACT DOCUMENTS, BUT NOT NECESSARILY UNDER THE DIVISION OR SECTION OF THE WORK ON WHICH THE NOTE APPEARS. IT IS THE CONTRACTORS SOLE RESPONSIBILITY TO COORDINATE THE WORK OF THE CONTRACT BETWEEN HIS/HER SUPPLIERS, SUBCONTRACTORS, AND EMPLOYEES. IF CLARIFICATION IS REQUIRED, CONSULT ARCHITECT.

8. "FIRESTOPPING" REQUIREMENT. ALL PENETRATIONS THROUGH RATED WALLS AND FLOORS SHALL BE SEALED WITH MATERIAL CAPABLE OF PREVENTING THE PASSAGE OF FLAMES AND HOT GASSES WHEN SUBJECTED TO THE REQUIREMENTS OF THE TEST STANDARD SPECIFIC FOR FIRE STOPS ASTM-E-814. ALL PENETRATIONS SHALL MEET F AND T RATINGS AS REQUIRED BY THE BUILDING CODE.

9. WHERE DISCONNECTS ARE INDICATED ON DRAWINGS CONTRACTOR SHALL PROVIDE FINAL CONNECTION TO EQUIPMENT BEING SERVED BY DISCONNECT.

10. CONTRACTOR PROVIDE ALL MISCELLANEOUS SUPPORTS AS REQUIRED FOR A COMPLETE OPERABLE ELECTRICAL INSTALLATION INCLUDING MISCELLANEOUS STEEL, UNI-STRUT, ALL-THREAD, AIRCRAFT CABLE, ETC.

11. PROVIDE A DEDICATED NEUTRAL CONDUCTOR FOR ALL SINGLE PHASE CIRCUITS. A SHARED NEUTRAL CONDUCTOR IS NOT ACCEPTABLE ON SINGLE PHASE CIRCUITS.

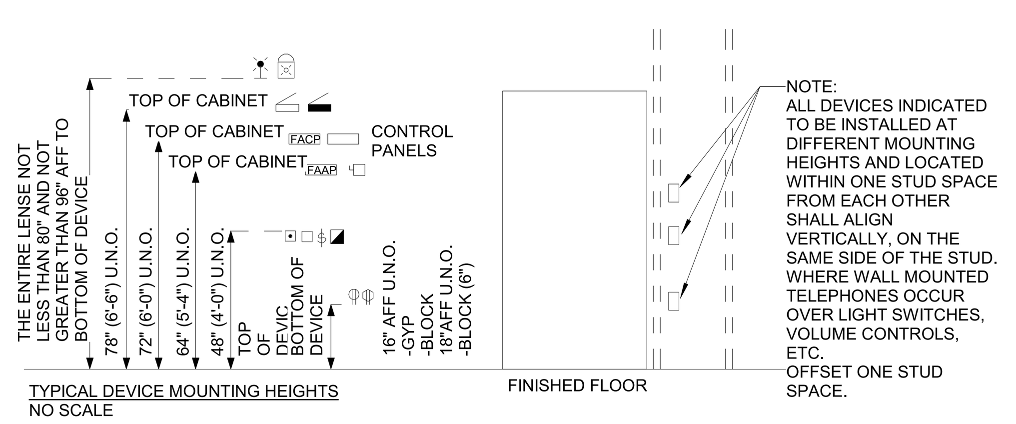

TYPICAL DEVICE MOUNTING HEIGHTS
NO SCALE

NOTES:

1. MOUNTING HEIGHTS SHOWN ON ARCHITECTURAL ELEVATIONS SHALL GOVERN OVER THOSE SHOWN ABOVE.
2. CONTRACTOR SHALL ENSURE THAT ALL MOUNTING HEIGHTS COMPLY WITH CURRENT ADA REQUIREMENTS.
3. WHERE EVER DEVICES ARE INDICATED TO BE ABOVE DOORS, DEVICE SHALL BE CENTERED BETWEEN TOP OF DOOR TRIM AND CEILING LINE.
4. ALL ABOVE COUNTER (DESIGNATED BY "AC") SHALL BE MOUNTED 8" ABOVE COUNTER, HORIZONTALLY, OR MAXIMUM HEIGHT OF 44" TO TOP OF DEVICE. VERIFY HEIGHTS WITH ARCHITECT.
5. FOR CEILINGS BELOW 7'-4", FIRE ALARM STROBE OR HORN/STROBES SHALL BE WALL MOUNTED 6" BELOW FINISHED CEILING.

ABBREVIATIONS

A,AMP	AMPERE
AC	ABOVE COUNTER
AF	AMPERE FUSE/FRAME
AFF	ABOVE FINISHED FLOOR
AFG	ABOVE FINISHED GRADE
AHU	AIR HANDLING UNIT
AIC	AVAILABLE INTERRUPT CURRENT
AL	ALUMINUM
AM	AMMETER
ANN	ANNUNCIATOR
ANT	ANTENNA
ASC	AVAILABLE SHORT-CIRCUIT CURRENT
ATS	AUTOMATIC TRANSFER SWITCH
AUTO	AUTOMATIC
AUX	AUXILIARY
AWG	AMERICAN WIRE GAUGE
BCST	BROADCAST
BFC	BELOW FINISHED CEILING
BFG	BELOW FINISHED GRADE
BKR	BREAKER
BOH	BACK OF HOUSE
C	CONDUIT
CAB	CABINET
CAM	CAMERA
CB	CIRCUIT BREAKER
CCTV	CLOSED CIRCUIT TELEVISION
CKT	CIRCUIT
CO	CONDUIT ONLY
COMB	COMBINATION
COMP	COMPUTER
COND	CONDUCTOR
CT	CURRENT TRANSFORMER
CU	COPPER
D	DEMOLISH
dB	DECIBEL
DEMARC	DEMARCATION
DISC	DISCONNECT
DL	DAMP LABEL
DP	DISTRIBUTION PANEL
DWG	DRAWING
DVR	DIGITAL VIDEO RECORDER
E, EX	EXISTING
EA	EACH
EC	ELECTRICAL CONTRACTOR
EF	EXHAUST FAN
EG	EQUIPMENT GROUND
EHC	ELECTRIC HEATING COIL
ELEC	ELECTRIC OR ELECTRICAL
ELEV	ELEVATOR
EMERG	EMERGENCY
EMT	ELECTRIC METALLIC TUBING
ENG	ELECTRONIC NEWS GATHERING
EOL	F/A END OF LINE RESISTOR
EQUIP	EQUIPMENT
ER	EXISTING TO BE REMOVED/RELOCATED
EWC	ELECTRIC WATER COOLER
EWH	ELECTRIC WATER HEATER
EXH	EXHAUST
EX	EXISTING
F	FUSE
F/A	FIRE ALARM
FACP	FIRE ALARM CONTROL PANEL
FATC	FIRE ALARM TERMINAL CABINET
FBO	FURNISHED BY OTHERS
FC	FOOTCANDLES
FDR	FEEDER
FCU	FAN COIL UNIT
FLEX	FLEXIBLE
FLR	FLOOR
FLUOR	FLUORESCENT
GALV	GALVANIZED
GB	GROUNDING BAR
GEN	GENERATOR
GFCI	GROUND FAULT CIRCUIT INTERRUPTER
GND	GROUND
HC	HORIZONTAL CROSS CONNECT
HD	HEAVY DUTY
HH	HAND HOLE
HOA	HAND-OFF-AUTO
HP	HORSEPOWER
HPF	HIGH POWER FACTOR
HPS	HIGH PRESSURE SODIUM
HTR	HEATER
IC	INTERMEDIATE CROSS CONNECT
ID	INSIDE DIAMETER
IDF	INTERMEDIATE DISTRIBUTION FRAME
IMC	INTERMEDIATE GRADE METALLIC CONDUIT
INCAND	INCANDESCENT
J-BOX	JUNCTION BOX
JBA	AUDIO CONNECTION BOX
JBC	COACHES JUNCTION BOX
JBE	ENG BROADCAST BOX
JBT	NETWORK BROADCAST CONNECTION BOX
KCMIL	THOUSAND OF CIRCULAR MILLS
KVA	KILOVOLT AMPERE
KW	KILOWATT
KWH	KILOWATT HOUR
LA	LIGHTNING ARRESTOR
LAN	LOCAL AREA NETWORK
LCP	LIGHTING CONTROL PANEL
LED	LIGHT EMITTING DIODE
LFC	LIQUID TIGHT FLEXIBLE CONDUIT
LTG	LIGHTING

ABBREVIATIONS

LV	LOW VOLTAGE
MA	MILLIAMPERE
MAX	MAXIMUM
MB	MAIN BREAKERS
MC	MECHANICAL CONTRACTOR
MC	MAIN CROSS CONNECT
MCC	MOTOR CONTROL CENTER
MCP	MOTOR CIRCUIT PROTECTOR
MDF	MAIN DISTRIBUTION FRAME
MDP	MAIN DISTRIBUTION PANEL
MECH	MECHANICAL
MFR	MANUFACTURER
MG	MOTOR GENERATOR
MH	MANHOLE OR METAL HALIDE
MIN	MINIMUM
MLO	MAIN LUGS ONLY
MOV	MOTOR OPERATED VALVE
MPOE	MAIN POINT OF ENTRY
MTG	MOUNTING HEIGHT
MS	MOTOR STARTER
MSB	MAIN SWITCHBOARD
MTB	MAIN TERMINAL BOARD
MTD	MOUNTED
MTG	MOUNTING
MTGB	MAIN TELECOMMUNICATIONS GROUND BUS
MV	MEDIUM VOLTAGE
N	NEUTRAL
NEC	NATIONAL ELECTRICAL CODE
NEMA	NATIONAL ELECTRICAL MANUFACTURERS ASSOCIATION
NF	NON FUSED
NIC	NOT IN CONTRACT
NC	NORMALLY CLOSED
NO	NORMALLY OPEN
NTS	NOT TO SCALE
OC	ON CENTER
OD	OUTSIDE DIAMETER
P	POLE
PA	PUBLIC ADDRESS
PB	PUSH BUTTON
PBX	PRIVATE BRANCH EXCHANGE
PE	PHOTOELECTRIC
PF	POWER FACTOR
PH	PHASE
PNL	PANEL
PR	PAIR
PRI	PRIMARY
PT	POTENTIAL TRANSFORMER
PVC	POLYVINYL CHLORIDE
PWR	POWER
QR	QUARTZ RESTRIKE
R	EXISTING TO RELOCATE
REC	RECEPTACLE
RGS	RIGID GALVANIZED STEEL
RM	ROOM
RPM	REVOLUTIONS PER MINUTE
SCP	SECURITY CONTROL PANEL
SEC	SECONDARY/SECOND
SECT	SECTION
SHT	SHEET
SMPOE	SECONDARY MAIN POINT OF ENTRY
SP	SERVICE PROVIDER
SPD	SURGE PROTECTIVE DEVICE
SPDT	SINGLE POLE, DOUBLE THROW
ST	SHUNT TRIP
STD	STANDARD
SW	SWITCH
SWBD	SWITCHBOARD
T	TWIST LOCK
TBB	TELECOMMUNICATIONS BONDING BACKBONE
TBD	TO BE DETERMINED
TC	TIME CLOCK
TTC	TELEPHONE TERMINAL CABINET OR CLOSET
TTB	TELEPHONE TERMINAL BOARD
TEL	TELEPHONE
TELCO	TELEPHONE COMPANY
TELCOM	TELECOMMUNICATIONS
TEMP	TEMPERATURE
TGB	TELECOMMUNICATIONS GROUND BUS
TO	THERMAL OVERLOAD
TR	TAMPER RESISTANT
TYP	TYPICAL
UC	UNDER COUNTER
U/G	UNDER GROUND
UH	UNIT HEATER
UL	UNDERWRITER LABORATORIES
UNO	UNLESS NOTED OTHERWISE
UPS	UNINTERRUPTIBLE POWER SUPPLY
USB	UNIVERSAL SERIAL BUS
UTP	UNSHIELDED TWISTED PAIR
V	VOLT
VAV	VARIABLE AIR VOLUME
VFD	VARIABLE FREQUENCY DRIVE
VM	VOLTMETER
W	WATT
W/	WITH
WH	WATT HOUR
WHM	WATT HOUR METER
WLAN	WIRELESS-LOCAL AREA NETWORK
WP	WEATHERPROOF
WPL	WEATHER PROOF LOCKABLE ENCLOSURE.
WT	WATERTIGHT
XFMR	TRANSFORMER
XP	EXPLOSION PROOF

LIGHTING

- STRIP LIGHT
- WALL MOUNTED LINEAR
- RECESSED 2'X4'
- RECESSED 1'X4'
- RECESSED 2'X2'
- SURFACE MOUNTED 2'X4'
- SURFACE MOUNTED 2'X2'
- SURFACE MOUNTED 1'X4'
- RECESSED STEP LIGHT
- WALL MOUNTED FLOODLIGHT
- WALL MOUNTED SCONCE
- SURFACE MOUNTED DOWN LIGHT
- SURFACE MOUNTED WALL WASH
- RECESSED DOWN LIGHT
- RECESSED WALL WASH
- RECESSED 1X4 WALL WASH
- PENDANT LIGHT
- MONOPOINT TRAC HEAD
- LINEAR LIGHT STRIP
- TRACK WITH TRACKHEADS
- POLE MOUNTED LUMINAIRE WITH ARM
- POLE MOUNTED LUMINAIRE POST TOP MOUNTING
- CEILING MOUNTED EXIT SIGN
- EXIT SIGN WITH DIRECTIONAL
- WALL MOUNTED EXIT SIGN ARROWS (CHEVRONS)
- EMERGENCY LIGHTING UNIT
- EM — UL924 EMERGENCY AUTOMATIC TRANSFER DEVICE
- OCCUPANCY SENSOR - CEILING MOUNTED
- DAYLIGHT SENSOR - CEILING MOUNTED
- COMBINATION OCCUPANCY SENSOR - WALL SWITCH
- DL — OCCUPANCY SENSOR - COMBINATION DUAL LEVEL WALL SWITCH
- OCCUPANCY SENSOR - WALL MOUNTED
- DIMMER SWITCH
- SINGLE POLE SWITCH
- 3 — 3-WAY SWITCH
- 4 — 4-WAY SWITCH
- W — WIRELESS SWITCH

SHADED SYMBOLS DENOTE EMERGENCY FIXTURES

FIRE ALARM

- SMOKE DETECTOR
- WALL SMOKE DETECTOR
- CO — SMOKE/CARBON MONOXIDE DETECTOR
- CO — WALL SMOKE/CARBON MONOXIDE DETECTOR
- HEAT DETECTOR
- DUCT DETECTOR
- BR — BEAM DETECTOR RECEIVER
- BT — BEAM DETECTOR TRANSMITTER
- EVAC — VOICE EVAC PANEL
- ESR — ELEVATOR STATUS PANEL
- CEILING MOUNTED [SPEAKER]
- WALL MOUNTED [SPEAKER]
- CEILING MOUNTED [SPEAKER]/STROBE
- WALL MOUNTED [SPEAKER]/STROBE
- S — WALL MOUNTED SILENTONE
- H — FIRE SERVICE PHONE
- J — FIREMAN'S PHONE JACK
- ROTATING BEACON
- MANUAL PULL STATION
- DH — MAGNETIC DOOR HOLD OPEN DEVICE
- TAMPER SWITCH
- FLOW SWITCH
- RTS — CEILING MOUNTED REMOTE INDICATOR LIGHT
- RTS — WALL MOUNTED REMOTE INDICATOR LIGHT
- WALL MOUNTED ADA STROBE
- CEILING MOUNTED STROBE
- IM — ADDRESSABLE INPUT MODULE
- FR — FIRE ALARM ADDRESSABLE RELAY
- ALARM BELL
- FIRE SMOKE DAMPER
- FR — SMOKE CONTROL DAMPER
- CO — CARBON MONOXIDE DETECTOR
- FAAP — FIRE ALARM ANNUNCIATOR PANEL
- FACP — FIRE ALARM CONTROL PANEL
- TWC — TWO-WAY COMMUNICATION CALL BUTTON
- TWCP — TWO-WAY COMMUNICATION PANEL

EQUIPMENT

- MOTOR
- MOTOR AND DISCONNECT
- MOTOR AND FUSED DISCONNECT
- MOTOR STARTER
- MAG-MSTR
- UN-FUSED DISCONNECT
- FUSED DISCONNECT
- CIRCUIT BREAKER
- BRANCH CIRCUIT OR POWER PANEL
- LIGHTING CONTROL PANEL
- M — METER
- CURRENT TRANSFORMER
- GROUND
- DELTA/WYE WITH GROUND
- T — POWER TRANSFORMER
- FUSE & SWITCH
- CIRCUIT BREAKER
- DRAWOUT CIRCUIT BREAKER
- K — KIRK-KEY INTERLOCK
- G — GROUND FAULT INTERRUPTER BREAKER
- D — CIRCUIT MONITORING DEVICE
- MECHANICAL EQUIPMENT IDENTIFICATION TAG
- X — SHORT CIRCUIT FAULT CALCULATION TAG REFER TO TABLE ON ONE-LINE DIAGRAM
- SPD — SURGE PROTECTION DEVICE
- TO — THERMAL OVERLOAD
- TO — MOTOR AND THERMAL OVERLOAD
- AUTOMATIC TRANSFER SWITCH

RACEWAY LEGEND

- A:2,4 — BRANCH CIRCUIT HOMERUN TO PANELBOARD, NUMBER OF ARROWS INDICATES NUMBER OF CIRCUITS, NUMERICAL INDICATES CIRCUIT NUMBER.
- A:2,4 (A) — BRANCH CIRCUIT HOMERUN CONTROLLED BY LIGHTING CONTROL SYSTEM. FIRST HEXAGON LETTER CORRESPONDS TO FIRST CIRCUIT NUMBER. (ie. CIRCUIT #2 IS ON ZONE A)
- UNDERGROUND FEEDER
- UNDERGROUND BRANCH CIRCUIT HOMERUN
- CONDUIT UP
- CONDUIT DOWN
- CONDUIT RUNS UNDERFLOOR OR BELOW GRADE
- CONDUIT RUN CONCEALED IN WALLS OR CEILING, OR EXPOSED WHEN CEILING ARE NOT PRESENT.
- MOTOR CONNECTION

POWER DEVICES

- WALL RECEPTACLE
- WALL DUPLEX RECEPTACLE
- WALL DUPLEX RECEPTACLE (UPS POWER)
- WALL FOURPLEX RECEPTACLE
- WALL FOURPLEX RECEPTACLE (UPS POWER)
- X — WALL SPECIAL RECEPTACLE (FOR "X" SEE TABLE BELOW)
- TV — WALL COMBINATION TV / POWER OUTLET
- WALL CLOCK RECEPTACLE
- J — WALL JUNCTION BOX
- J — WALL FURNITURE FEED
- FLOOR DUPLEX RECEPTACLE
- FLOOR FOURPLEX RECEPTACLE (POWER/DATA/AV COMBO DEVICE. REFER TO TECHNOLOGY DRAWINGS)
- AV — FLOOR FOURPLEX RECEPTACLE WITH AV (POWER/DATA/AV COMBO DEVICE. REFER TO TECHNOLOGY DRAWINGS)
- J — FLOOR JUNCTION BOX
- FLOOR FURNITURE FEED
- CEILING RECEPTACLE
- CEILING DUPLEX RECEPTACLE
- CEILING FOURPLEX RECEPTACLE
- X — CEILING / FLOOR SPECIAL RECEPTACLE (FOR "X" SEE TABLE BELOW)
- J — CEILING JUNCTION BOX
- TV — CEILING TV OUTLET
- POWER POLE
- SINGLE TOGGLE SWITCH
- PLUGMOLD
- EMERGENCY POWER OFF
- SINGLE PUSH BUTTON
- DUPLEX PUSH BUTTON
- WALL BUZZER

GENERAL NOTES:

1. REFER TO SPECIFICATION SECTION 26 27 26 FOR SPECIFIC FLOOR PRODUCT INFORMATION.
2. REFER TO TECHNOLOGY LEGEND AND FLOOR PLANS TO CONFIRM ALL LOCATIONS THAT HAVE DATA OR DATA/AV REQUIREMENTS COMBINED WITH POWER IN FLOOR BOXES.
3. REFER TO TECHNOLOGY (AND/OR AV) DRAWINGS FOR DEDICATED LOW VOLTAGE CONDUIT AND FLOOR BOX DEVICE MOUNTING PLATE REQUIREMENTS. LOW VOLTAGE CONDUIT REQUIREMENTS ARE NOT DOCUMENTED ON POWER DRAWINGS.

RECEPTACLE MODIFIER TAGS

TAG	OUTLET RATING	NEMA/CAT NO	FEEDER (NOTE 1)	WIRING NOTES
A	NON-LOCKING, 20A, 125V, 1PH	5-20R	2#12,#12G,3/4"C (50FT)	DEDICATED, SINGLE OUTLET
B	NON-LOCKING, 30A, 125V, 1PH	5-30R	2#10,#10G,3/4"C (60FT)	HOT-NEUT-GND
C	NON-LOCKING, 20A, 250V, 1PH	6-20R	2#12,#12G,3/4"C (100FT)	HOT-HOT-GND
D	NON-LOCKING, 30A, 250V, 1PH	6-30R	2#10,#10G,3/4"C (120FT)	HOT-HOT-GND
E	NON-LOCKING, 50A, 250V, 1PH	6-50R	2#6,#10G,3/4"C (150FT)	HOT-HOT-GND
F	TBD	-	-	-
G	NON-LOCKING, 20A, 125/250V, 1PH	14-20R	3#12,#12G,3/4"C (100FT)	HOT-HOT-NEUT-GND
H	TBD	-	-	-
I	NOT USED	-	-	-
J	LOCKING, 20A, 125V, 1PH	L5-20R	2#12,#12G,3/4"C (50FT)	HOT-NEUT-GND
K	LOCKING, 30A, 125V, 1PH	L5-30R	2#10,#10G,3/4"C (60FT)	HOT-NEUT-GND
L	LOCKING, 20A, 250V, 1PH	L6-20R	2#12,#12G,3/4"C (100FT)	HOT-HOT-GND
M	LOCKING, 30A, 250V, 1PH	L6-30R	2#10,#10G,3/4"C (120FT)	HOT-HOT-GND
N	TBD	-	-	-
O	NOT USED	-	-	-
P	LOCKING, 20A, 125/250V, 1PH	L14-20R	3#12,#12G,3/4"C (100FT)	HOT-HOT-NEUT-GND
Q	LOCKING, 30A, 125/250V, 1PH	L14-30R	3#10,#10G,3/4"C (120FT)	HOT-HOT-NEUT-GND
R	TBD	-	-	-
S	LOCKING, 20A, 208Y/120V, 3PH	L21-20R	4#12,#12G,3/4"C (120FT)	HOT-HOT-HOT-NEUT-GND
T	LOCKING, 30A, 208Y/120V, 3PH	L21-30R	4#10,#10G,3/4"C (130FT)	HOT-HOT-HOT-NEUT-GND
U	LOCKING, 50A, 250V, 3PH	HBL CS8369	3#6,#10G,1"C (175FT)	HOT-HOT-HOT-GND
V	NOT USED	-	-	-
W	PIN & SLEEVE, 60A, 208Y/120V, 3PH	HBL 560R9W	4#4,#10G,1-1/4"C (200FT)	HOT-HOT-HOT-NEUT-GND
X	PIN & SLEEVE, 100A, 208Y/120V, 3PH	HBL 5100R9W	4#1,#8G,1-1/2"C (250FT)	HOT-HOT-HOT-NEUT-GND
Y	TBD	-	-	-
Z	TBD	-	-	-

NOTE 1: DISTANCE NOTED IS MAXIMUM RUN LENGTH FOR WIRE SIZE. INCREASE PER NEC, INCLUDING GROUND, FOR LONGER RUNS OR FOR DERATING FACTORS (AMB TEMP, EXTERIOR, ETC.)

BRINKLEY SARGENT WIGINTON ARCHITECTS

Architect: Brinkley Sargent Wiginton Architects (972) 960-9970
Landscape: Kendall Landscape Architecture (214) 739-3226
Structural: L.A. Fuess Partners, Inc (214) 593-1118
MEP: M-E Engineers (214) 741-1589
Civil: KSA Engineers, Inc (903) 236-7700
Technology: M-E Engineers (303) 421-6656

LONGVIEW POLICE DEPARTMENT

518 W. SOUTH ST. LONGVIEW, TEXAS 75601

History

#	Date	Description

STATE OF TEXAS
ANDREW SHIVLEY
109010
LICENSED
PROFESSIONAL ENGINEER
ME Engineers, Inc.
F-10231
08/19/2020

ELECTRICAL LEGEND AND NOTES

20513
08/19/2020
E001

BID ISSUE

8/17/2020 9:48:17 AM
C:\Revit Projects\2019\LPD_CENTRAL_E19_Derek.White97PLE.rvt

© 2020 Brinkley Sargent Wiginton Architects, Inc.

FEEDER TABLE - CONDUCTORS

Bkr/OCPD	TAG	Sets	PIPE	COPPER FDR/PIPE [3W]	ALUMINUM FDR/PIPE [3W]	TAG	Sets	PIPE	COPPER FDR/PIPE [4 W]	ALUMINUM FDR/PIPE [4 W]
20	F1	1	3/4"	3#12,#12G	-	FA1	1	3/4"	4#12,#12G	-
30	F2	1	3/4"	3#10,#10G	-	FA2	1	3/4"	4#10,#10G	-
40	F3	1	3/4"	3#8,#10G	-	FA3	1	1"	4#8,#10G	-
50	F4	1	1"	3#6,#10G	-	FA4	1	1"	4#6,#10G	-
50	-	-	-	-	-	FA4A	1	1-1/4"	4#6,#8G	-
60	F5	1	1-1/4"	3#4,#8G	-	FA5	1	1-1/4"	4#4,#8G	-
70	F5	1	1-1/4"	3#4,#8G	-	FA5	1	1-1/4"	4#4,#8G	-
80	F6	1	1-1/4"	3#3,#8G	-	FA6	1	1-1/4"	4#3,#8G	-
90	F7	1	1-1/4"	3#2,#8G	-	FA7	1	1-1/2"	4#2,#8G	-
100	F8	1	1-1/2"	3#1,#8G	-	FA8	1	2"	4#1,#8G	-
100	-	-	-	-	-	FA8A	1	2"	4#1,#6G	-
110	F8A	1	1-1/2"	3#1,#6G	-	-	-	-	-	-
125	F9	1	1-1/2"	3#1/0,#6G	-	FA9	1	2"	4#1/0,#6G	-
150	F9	1	1-1/2"	3#1/0,#6G	-	FA9	1	2"	4#1/0,#6G	-
175	F10	1	2"	3#2/0,#6G	-	FA10	1	2"	4#2/0,#6G	-
200	F11	1	2"	3#3/0,#6G	3#250,#6G	FA11	1	2-1/2"	4#3/0,#6G	4#250,#6G
225	F12	1	2-1/2"	3#4/0,#4G	3#300,#4G	FA12	1	2-1/2"	4#4/0,#4G	4#300,#4G
250	F13	1	2-1/2"	3#250,#4G	3#350,#4G	FA13	1	3"	4#250,#4G	4#350,#4G
250	-	-	-	-	-	FA13A	1	3	4#250,#2G	4#350,#2G
300	F14	1	3"	3#350,#4G	3#500,#4G	FA14	1	3"	4#350,#4G	4#500,#4G
350	F15	1	3"	3#500,#3G	3#700,#3G	FA15	1	3-1/2"	4#500,#3G	4#700,#3G
400	F16	2	2"	3#3/0,#3G	3#250,#2G	FA16	2	2-1/2"	4#3/0,#3G	4#250,#3G
400	-	-	-	-	-	FA16A	2	2-1/2"	4#3/0,#1/0G	4#250,#1/0G
400	F16B	1	3"	3#500,#3G	-	FA16B	1	3-1/2"	4#500,#3G	-
400	-	-	-	-	-	FA16C	1	4"	4#600,#3G	-
400	-	-	-	-	-	FA16D	1	4"	4#600,#1/0G	-
450	F17	2	2-1/2"	3#4/0,#2G	3#300,#2G	FA17	2	2-1/2"	4#4/0,#2G	4#300,#2G
500	F18	2	2-1/2"	3#250,#2G	3#350,#2G	FA18	2	3"	4#250,#2G	4#350,#2G
500	-	-	-	-	-	FA18A	2	3"	4#250,#1/0G	4#350,#1/0G
600	F19	2	3"	3#350,#1G	3#500,#1G	FA19	2	3"	4#350,#1G	4#500,#1G
700	F20	2	3"	3#500,#1/0G	3#700,#1/0G	FA20	2	3-1/2"	4#500,#1/0G	4#700,#1/0G
750	F20	2	3"	3#500,#1/0G	3#700,#1/0G	-	-	-	-	
800	F21	3	3"	3#300,#1/0G	3#400,#1/0G	FA21	3	3"	4#300,#1/0G	4#400,#1/0G
800	-	-	-	-	-	FA21A	3	3"	4#300,#2/0G	4#400,#2/0G
800	F21C	2	3-1/2"	3#600,#1/0G	-	FA21C	2	4"	4#600,#1/0G	-
1000	F22	3	3"	3#400,#2/0G	3#600,#2/0G	FA22	3	3-1/2"	4#400,#2/0G	4#600,#2/0G
1000	-	-	-	-	-	FA22A	3	3-1/2"	4#400,#3/0G	4#600,#3/0G
1200	F23	4	3"	3#350,#3/0G	3#500,#3/0G	FA23	4	3"	4#350,#3/0G	4#500,3/0G
1200	F23C	3	3-1/2"	3#600,#3/0G	-	FA23C	3	4"	4#600,#3/0G	-
1600	F24	5	3"	3#400,#4/0G	3#600,#4/0G	FA24	5	3-1/2"	4#400,#4/0G	4#600,#4/0G
1600	-	-	-	-	-	FA24A	5	3-1/2"	4#400,#250G	4#600,#250G
1600	F24C	4	3-1/2"	3#600,#4/0G	-	FA24C	4	4"	4#600,#4/0G	-
2000	F25	6	3"	3#400,#250G	3#600,#250G	FA25	6	3-1/2"	4#400,#250G	4#600,#250G
2000	F25C	5	4"	3#600,#250G	-	FA25C	5	4"	4#600,#250G	-
2500	F26	7	3-1/2"	3#500,#350G	3#700,#350G	FA26	7	3-1/2"	4#500,#350G	4#700,#350G
2500	-	-	-	-	-	FA26A	7	4"	4#500,#500G	4#700,#500G
2500	F26C	6	4"	3#600,#350G	-	FA26C	6	4"	4#600,#350G	-
3000	F27	8	3-1/2"	3#500,#400G	3#700,#400G	FA27	8	4"	4#500,#400G	4#700,#400G
3500	F28	10	3-1/2"	3#500,#500G	3#700,#500G	FA28	10	4"	4#500,#500G	4#700,#500G
3500	F28C	9	4"	3#600,#500G	-	FA28C	9	4"	4#600,#500G	-
4000	F29	11	4"	3#500,#500G	3#700,#500G	FA29	11	4"	4#500,#500G	4#700,#500G
4000	F29C	10	4"	3#600,#500G	-	FA29C	10	4"	4#600,#500G	-

1. ALL CONDUCTORS ARE WITH THHN/THWN WIRE WITH 60DEG TERMINATIONS UP TO #1AWG AND 75DEG FOR LARGER SIZES.
2. ALL ALUMINUM FEEDERS SHALL INCLUDE COPPER EQUIPMENT GROUND CONDUCTORS

TRANSFORMER TABLE
480V PRIMARY - 208/120V SECONDARY

KVA	FL AMPS	BKR SIZE	FDR	TRANSFORMER GROUNDING ELECTRODE (3)		FL AMPS	BKR SIZE	FDR
KVA	480V	(1)	(2)	WIRE AWG	CONDUIT IN	208V	(1)	(2)
15	18	30	F2	8	3/4"	41.7	50	FA4A
30	36.1	50	F4	6	3/4"	83.3	100	FA8A
45	54.1	70	F5	6	3/4"	124.9	150	FA9
75	90.2	125	F9	2	3/4"	208.2	250	FA13A
112.5	135.3	175	F10	1/0	1"	312.3	400	FA16A
150	180.4	225	F12	1/0	1"	416.4	500	FA18A
225	270.6	350	F15	2/0	1"	625.5	800	FA21A
300	360.8	450	F17	3/0	1"	832.7	1000	FA22A
500	601.4	800	F21	250	1"	1387.9	1600	FA24A

1. USE DEVICE TYPES INDICATED ON SINGLE LINE DIAGRAM.
2. REFERENCE FEEDER TABLE FOR FEEDER SIZE(S).
3. PROVIDE COPPER GROUNDING ELECTRODE.

ATS SCHEDULE

ATS NAME	LOADS SERVED	PRIORITY
ATS-E	EMERGENCY	1
ATS-SCC	CALL CENTER, IT LOADS	2
ATS-S1	SWAT, STRATEGIC OFFICE/CONF. SPACES	3
ATS-S2	RANKING POLICE OFFICES	4
ATS-S3	REMAINING BALANCE OF BUILDING LOADS	5

PANEL NAME KEY

S2-R3B

ATS SWITCH — SERIES

LOAD SERVED — LEVEL

R - (208/120V)

L - (480/277V)

U - DESIGNATES UPSTREAM UPS BACKUP

S3-D1A

Location: EMERGENCY POWE... Volts: 480/277 Wye S.C.C.R. Rating: 65,000
Supply From: ATS-S3 Phases: 3 Mains Type: MLO
Mounting: Surface Wires: 4 Mains Rating: 800 A
Enclosure: Type 1 Ground: Copper

LOADS SUMMARY	LTG	RCPT	MOTOR	MISC.	KITCHEN	ELECTRIC HEAT	Load	
TS3-R1A		14700	19052	3240			36992 VA	44 A
S3-L1B	9051	21280	2000	2000	5600	120823 VA	159713 VA	192 A
S3-L1A	1160	6412		1000		4988 VA	13297 VA	16 A
S3-L2B	9858	76966	7982	46910	6200	185809 VA	335024 VA	403 A
CONNECTED TOTALS (V-A)	18945	119266	29034	53129	11800	311620 VA	544978 VA	656 A
DIVERSITY FACTORS	125.00%	54.19%	105.01%	100.00%	65.00%	100.00%	--	--
DEMAND TOTAL (V-A)	23681	64633	30490	53129	7670	311620	492027 VA	592 A

S1-D1A

Location: EMERGENCY POWE... Volts: 480/277 Wye S.C.C.R. Rating: 65000
Supply From: ATS-S1 Phases: 3 Mains Type: MLO
Mounting: Pad Wires: 4 Mains Rating: 1600 A
Enclosure: Type 1 Ground: Copper

LOADS SUMMARY	LTG	RCPT	MOTOR	MISC.	KITCHEN	ELECTRIC HEAT	Load	
S1-L1A		720		87297		59955 VA	147829 VA	178 A
S1-L2B	4269	65757	3500	22807	12900	21973 VA	131862 VA	159 A
TS1-R1A	120	15291	6172	44968			66250 VA	80 A
RTU-2			178249				178249 VA	214 A
RTU-3			178249				178249 VA	214 A
STAFF ELEVATOR			66510				66510 VA	80 A
LOBBY ELEVATOR			63186				63186 VA	76 A
S1-L3B	1519			6984		214212 VA	222715 VA	268 A
CONNECTED TOTALS (V-A)	5903	80969	495866	162055	12900	296140 VA	1054624 VA	1269 A
DIVERSITY FACTORS	125.00%	56.18%	108.99%	100.00%	65.00%	100.00%	--	--
DEMAND TOTAL (V-A)	7379	45485	540428	162055	8385	296140	1060817 VA	1276 A

MSA

Location: NORMAL POWER 1513 Volts: 480/277 Wye S.C.C.R. Rating: 65,000
Supply From: Phases: 3 Mains Type: MCB
Mounting: PAD Wires: 4 Mains Rating: 3000 A
Enclosure: TYPE 1 Ground: Copper

LOADS SUMMARY	LTG	RCPT	MOTOR	MISC.	KITCHEN	ELECTRIC HEAT	Load	
ATS-E	6086	540	12233	8448			27389 VA	33 A
ATS-SCC							0 VA	0 A
ATS-S1	5903	80969	495866	162055	12900	296140 VA	1054624 VA	1269 A
ATS-S2	5728	43509	500	12520	840	123540 VA	186780 VA	225 A
ATS-S3	18945	119266	29034	53129	11800	311620 VA	544978 VA	656 A
CONNECTED TOTALS (V-A)	36080	244213	536094	234966	25540	731300 VA	1810573 VA	2178 A
DIVERSITY FACTORS	125.00%	52.05%	108.68%	100.00%	65.00%	100.00%	--	--
DEMAND TOTAL (V-A)	45100	127107	582622	234966	16601	731300	1739767 VA	2093 A

SHORT CIRCUIT CALCULATION VALUES (E001)

ID	AMP RMS	ID	AMP RMS	ID	AMP RMS	ID	AMP RMS
1	63,567	11	61,393	21	18,047	31	7,330
2	64,837	12	60,095	22	16,348	32	7,305
3	46,541	13	21,277	23	14,861	33	
4	43,324	14	23,112	24	56,352	34	
5	12,044	15	4,837	25	54,597	35	
6	10,267	16	7,695	26	6,596	36	
7	46,772	17	23,356	27	22,521	37	
8	44,935	18	21,476	28	20,764	38	
9	42,426	19	59,664	29	19,178	39	
10	1,626	20	48,631	30	7,508	40	

BASED ON 2MW (3.75%Z) UTILITY XFMR

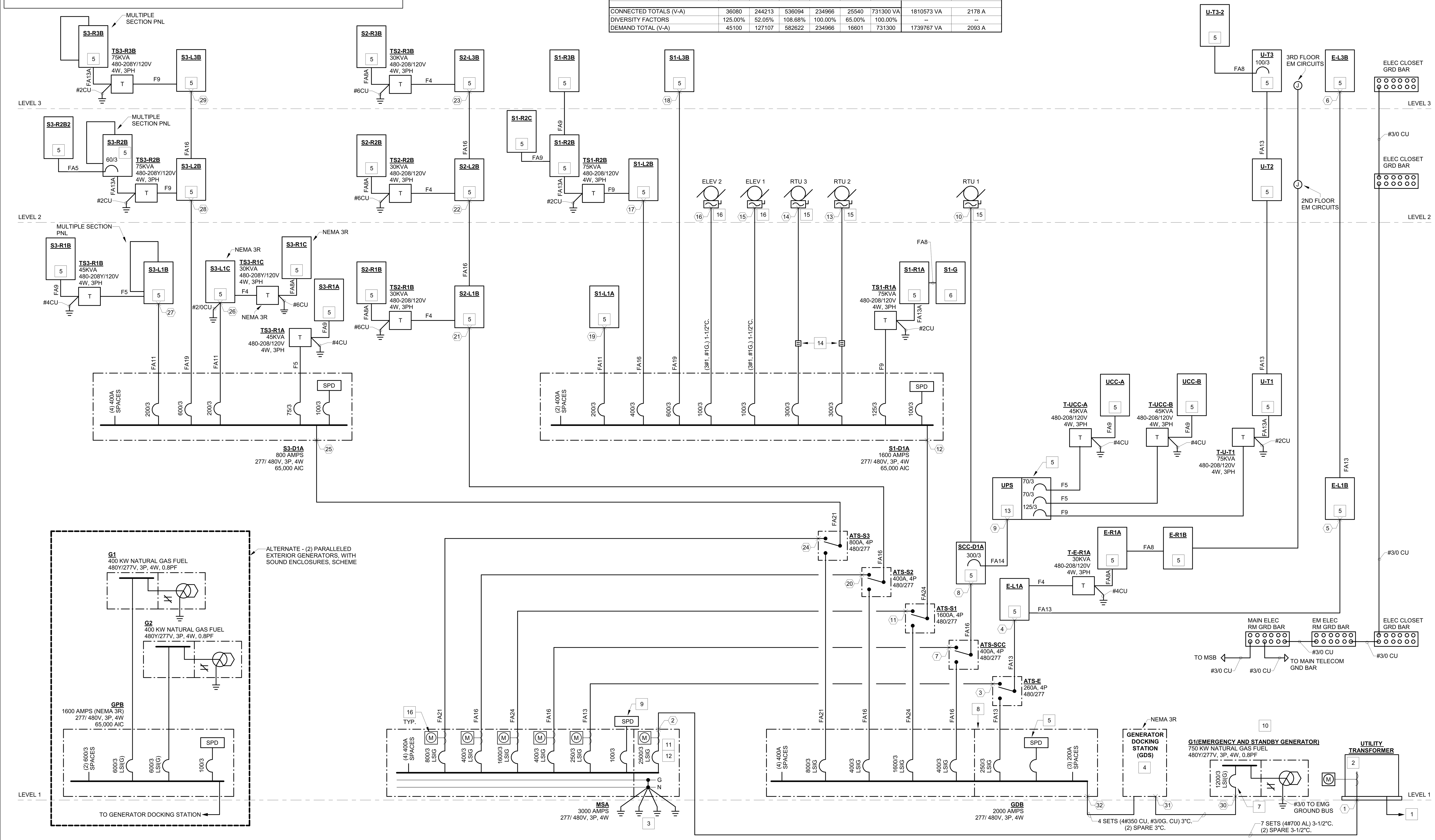

GENERAL NOTES:

1. ALL FEEDERS AND TERMINATIONS SHALL BE COPPER 75 DEGREE RATED.

2. FEEDER LENGTHS ARE INDICATED FOR CALCULATION PURPOSES ONLY. THIS DRAWING IS NOT TO SCALE, FEEDERS LENGTHS MUST BE CONFIRMED WITH THE CONTRACTOR.

3. ALL CONDUIT RUNS SHALL BE RAN PERPENDICULAR AND PARALLEL TO COLUMNS AND BEAMS. ALL EXPOSED CONDUIT RUNS SHALL BE COORDINATED WITH ARCHITECT PRIOR TO INSTALLATION.

4. FOR CALCULATION PURPOSES THE FOLLOWING TRANSFORMER (2016 DOE) IMPEDANCES AND MAXIMUM SHORT CIRCUIT VALUES WERE USED:
15 KVA-3.1%Z, ISC=1,343A.
30 KVA-2.5%Z, ISC=1,665A.
45 KVA-3.2%Z, ISC=3,903A.
75 KVA-2.8%Z, ISC=7,330A.
112.5 KVA-3.4%Z, ISC=9,184A.
150 KVA-3.0%Z, ISC=13,787A.
225 KVA-3.5%Z, ISC=17,844A.
300 KVA-3.5%Z, ISC=23,929A.
500 KVA-4.6%Z, ISC=30,171A.

5. PROVIDE FULL BUSSING FOR ALL SPACES INDICATED ON PANEL BOARDS AND DISTRIBUTION BOARDS.

6. CONNECT ALL TRANSFORMER GROUNDING ELECTRODES TO GROUND BUS RISER.

7. REFER TO FEEDER TABLE FOR FEEDER SIZE CORRESPONDING TO OVERCURRENT PROTECTION DEVICE (BREAKER OR FUSE) SHOWN ON ONE-LINE.

8. ALL EQUIPMENT TO BE FULLY RATED FOR THE AVAILABLE FAULT. ASSUME 65,000 AMPS AVAILABLE AT THE MAIN SERVICE.

9. REFER TO DETAIL 3 ON SHEET E602 FOR GROUND BUS BAR DETAIL.

10. REFER TO DETAIL 8 &11 ON SHEET E601 FOR PANELBOARD AND SWITCHBOARD NAMEPLATE DETAILS.

11. REFER TO DETAIL 3 ON SHEET E601 FOR TRANSFORMER NAMEPLATE DETAILS.

KEYNOTES

1	COORDINATE WITH UTILITY PROVIDER FOR ROUTING, SIZE, AND QUANTITY OF PRIMARY CONDUITS.
2	UTILITY TRANSFORMER PROVIDED BY UTILITY COMPANY. CONCRETE PAD IS TO BE PROVIDED BY THE PROJECT. REFER TO E102 FOR PROPOSED LOCATION FOR EXTERNAL METER TRANSOCKET WALL MOUNTED ON THE BUILDING, COORDINATE FINAL LOCATION OF METER WITH UTILITY FOR INSTALLATION BY THIS CONTRACTOR.
3	PROVIDE COMMON GROUND ELECTRODES, TIED TO BUILDING STEEL, WATER ENTRANCE PIPE, GROUND LOOP, AND UFER GROUND.
4	PROVIDE DUAL TEMPORARY GENERATOR AND LOAD BANK CONNECTION CABINET. REFER TO DETAIL E603/DETAIL 1 FOR SPECIFIC REQUIREMENTS. DOCKING STATION TO BE SUBMITTED FOR REVIEW BY EOR.
5	PROVIDE INTERNALLY MOUNTED SURGE PROTECTION DEVICE. REFER TO SPECIFICATION SECTION 264314.
6	GENERATOR LOAD CENTER PANEL(S) TO BE PROVIDED BY GENERATOR MANUFACTURER AS PART OF THE GENERATOR SUBMITTAL PACKAGE. LOAD CENTER PANEL TO BE COORDINATED WITH SELECTED GENERATOR MANUFACTURER TO PROVIDE ALL AUXILIARY GENERATOR POWER LOADS INCLUDING, THE BATTERY CHARGER, JACKET HEATERS, MAINTENANCE RECEPTACLES AND LIGHTING.
7	PROVIDE BREAKER WITH LSI TRIP FUNCTIONS AND GROUND FAULT NOTIFICATION ONLY. THIS CONTRACTOR IS TO COORDINATE WITH SELECTED GENERATOR MANUFACTURER TO PROVIDE BREAKER MAKE TO BE THE SAME AS THE ELECTRICAL EQUIPMENT DISTRIBUTION GEAR ON THE PROJECT. THIS BREAKER IS TO BE SELECTIVELY COORDINATED WITH OTHER BREAKERS PER THE TESTING SPECIFICATION AND NEC REQUIREMENTS.
8	PROVIDE PHYSICAL BARRIER, CONFORMING TO THE REQUIREMENTS OF ARTICLE 700 OF THE NEC FOR SEPARATION OF EMERGENCY AND STANDBY SYSTEMS.
9	PROVIDE EXTERNAL SPD, REFER TO SPECIFICATION SECTION 264313.
10	PROVIDE GENERATOR ANNUNCIATOR PANEL, WITH START/STOP, AT DISPATCH CALL CENTER. REFER TO PLANS. ANNUNCIATOR PANEL TO ALSO HAVE STATUS INDICATION OF ATS POWER AND SWITCH POSITIONS.
11	PROVIDE 100% RATED MAIN BREAKER WITH ENERGY REDUCING MAINTENANCE SWITCH.
12	PROVIDE MAIN METER AND METERING OF EACH FEEDER BREAKER WITHIN THIS BOARD. PROVIDE INTEGRATED METERING SOLUTION FOR LOCAL AND REMOTE VIEWING OF ALL METERS. PROVIDE SQUARE-D PM500 SERIES OR APPROVED EQUIVALENT.
13	PROVIDE A 150KW, SCALABLE, HOT SWAPPABLE MODULAR BASED UPS UNIT. THE UPS SHALL HAVE N+1 REDUNDANCY WITH AN EXTERNAL MAINTENANCE BYPASS CABINET. AT FULL LOAD THE UPS UNIT SHALL HAVE A 9 MINUTE RUNTIME. PROVIDE A BREAKER BASED DISTRIBUTION CABINET FOR LOAD FEEDS.
14	PROVIDE 3 POLE CONTACTORS TO DISCONNECT 1 OF THE BUILDINGS HVAC RTU'S DURING GENERATOR POWER EVENTS.
15	REFER TO CORRESPONDING MECHANICAL SCHEDULES FOR FEEDER SIZE, CONDUIT AND DISCONNECT REQUIREMENTS. THIS CONTRACTOR IS TO PROVIDE FUSED DISCONNECTS WHERE SCHEDULED IN ORDER TO MEET AIC/SCCR RATINGS OF HVAC EQUIPMENT.
16	METER EQUIPMENT MANUFACTURER TO COORDINATE METER SYSTEM INTEGRATION WITH SWITCHBOARD. SUBMIT METER SYSTEM AS PART OF SWITCHBOARD SUBMITTAL

BRINKLEY SARGENT WIGINTON ARCHITECTS

Architect: Brinkley Sargent Wiginton Architects (972) 960-9970
Landscape: Kendall Landscape Architecture (214) 739-3226
Structural: L.A. Fuess Partners, Inc (214) 593-1118
MEP: M-E Engineers (214) 741-1589
Civil: KSA Engineers, Inc (903) 236-7700
Technology: M-E Engineers (303) 421-6656

LONGVIEW POLICE DEPARTMENT

518 W. SOUTH ST. LONGVIEW, TEXAS 75601

History

#	Date	Description

STATE OF TEXAS ANDREW SHIVLEY 109010 LICENSED PROFESSIONAL ENGINEER

ME Engineers, Inc. F-10231 08/19/2020

ELECTRICAL ONE-LINE

20513

08/19/2020

E002

BID ISSUE

C:\Revit Projects\2019\LPD_CENTRAL_E19_Derek.White97PLE.rvt 8/17/2020 9:48:20 AM

© 2020 Brinkley Sargent Wiginton Architects, Inc.

SCC-D1A

Location:	EMERGENCY POWE...	Volts:	480/277 Wye	S.C.C.R. Rating:	REFER TO ONE-LINE
Supply From:		Phases:	3	Mains Type:	MLO
Mounting:	Surface	Wires:	4	Mains Rating:	400 A
Enclosure:	TYPE 1	Ground:	Copper		

LOADS SUMMARY	LTG	RCPT	MOTOR	MISC.	KITCHEN	ELECTRIC HEAT	Load	
UPS		49519		74257			122765 VA	148 A
RTU-1			23279				23279 VA	28 A
CONNECTED TOTALS (V-A)		49519	23279	74257			143586 VA	173 A
DIVERSITY FACTORS		60.10%	125.00%	100.00%			--	--
DEMAND TOTAL (V-A)		29759	29099	74257			129189 VA	155 A

E-L1A

<LONGVIEW POLICE>
LONGVIEW POLICE DEPARTMENT — M-E Engineers Inc. — PANEL: **E-L1A**

480/277 Wye; 3 Phase, 4 Wire + Gnd. 60Hz.; SCCR: REFER TO ONE-LINE kA
BUS: 250 A TIN PLATED COPPER; MAINS: MLO; GROUD BAR: Copper
ENCLOSURE: Type 1; MOUTING: Surface; FED FROM: ATS-E; LEVEL: Level 1; LOCATION: EMERGENCY POWER 1512; ISSUE DATE: 08/19/2020
NOTES:
OPTIONS: Subfeed Lugs: Yes; "SPD"
REFER TO DETAILS AND SPECIFICATION SECTION FOR PANELBOARD LAMINATED PLAQUE REQUIREMENTS.

N	DESCRIPTION	P	BRK	CKT	A (V-A)		B (V-A)		C (V-A)		CKT	BRK	P	DESCRIPTION	N
	STAFF STAIR LTG	1	20	1	864	270					2	20	1	SWAT STORAGE LTG	
	EL-02 SHAFT LTG	1	20	3			96	1120			4	20	1	EGRESS WALL PACKS	
	Spare	1	20	5					0	0	6	20	1	Spare	
	Spare	1	20	7	0	0					8	20	1	Spare	
	Spare	1	20	9			0	0			10	20	1	Spare	
	Spare	1	20	11					0	0	12	20	1	Spare	
	Spare	1	20	13	0	0					14	20	1	Spare	
	Spare	1	20	15			0	0			16	20	1	Spare	
	Spare	1	20	17					0	0	18	20	1	Spare	
	Spare	1	20	19	0	0					20	20	1	Spare	
	Spare	1	20	21			0	0			22	20	1	Spare	
	Spare	1	20	23					0	0	24	20	1	Spare	
	Spare	1	20	25	0	7305					26	50	3	TE-R1A	
	Spare	1	20	27			0	6676			28	--	--	--	--
	Spare	1	20	29					0	5069	30	--	--	--	--

CONNECTED (DOWNSTREAM LOADS INCLUDED)

PHASE	A	B	C	TOTALS
V-A	11652	9176	6588	27389
AMPS	44	35	24	33

DOWNSTREAM LOADS: E-L1B, E-L3B

LOAD SUMMARY WITH DOWNSTREAM LOADS INCLUDED

CATEGORY	CONNECTED	FACTOR	CALC. V-A	AMPS @ 480/277 Wye
LIGHTING	6086	125%	7607	9
RECEPTACLE	540	100.00%	540	1
MOTOR	12233	108.60%	13285	16
MISCELLANEOUS	8448	100.00%	8448	10
KITCHEN				
ELECTRIC HEAT				
TOTAL	27389 VA		29963 VA	36 A

CONDUCTOR COLORS (EC TO LABEL IN PANEL)

	208Y/120	480Y/277
A	BLACK	BROWN
B	RED	ORANGE
C	BLUE	YELLOW
N	WHITE	WHITE/GRAY STRIPE
G	GREEN	GREEN

S1-L1A

<LONGVIEW POLICE>
LONGVIEW POLICE DEPARTMENT — M-E Engineers Inc. — PANEL: **S1-L1A**

480/277 Wye; 3 Phase, 4 Wire + Gnd. 60Hz.; SCCR: REFER TO ONE-LINE kA
BUS: 250 A TIN PLATED COPPER; MAINS: MLO; GROUD BAR: Copper
ENCLOSURE: Type 1; MOUTING: Surface; FED FROM: S1-D1A; LEVEL: Level 1; LOCATION: EMERGENCY POWER 1512; ISSUE DATE: 08/19/2020
NOTES:
OPTIONS: Subfeed Lugs: No; "SPD"
REFER TO DETAILS AND SPECIFICATION SECTION FOR PANELBOARD LAMINATED PLAQUE REQUIREMENTS.

N	DESCRIPTION	P	BRK	CKT	A (V-A)		B (V-A)		C (V-A)		CKT	BRK	P	DESCRIPTION	N
	VAV 1-01	1	20	1	2992	9700					2	50	3	CRAC 1-01	
	VAV 1-02	1	40	3			8005	9700			4	--	--	--	--
	VAV 1-03	1	20	5					3989	9700	6	--	--	--	--
	VAV 1-04	1	40	7	7008	4988					8	30	3	EDH 1-01	
	VAV 1-38	1	40	9			8005	4988			10	--	--	--	--
	VAV 1-13	1	30	11					5014	4988	12	--	--	--	--
	UH 1-01	3	20	13	3326	9700					14	50	3	CRAC 1-02	
--	--	--	--	15			3326	9700			16	--	--	--	--
--	--	--	--	17					3326	9700	18	--	--	--	--
	VEHICLE 1508 - BUSWAY	3	60	19	120	9700					20	50	3	CRAC 1-03	
--	--	--	--	21			120	9700			22	--	--	--	--
--	--	--	--	23					120	9700	24	--	--	--	--
	VEHICLE PROCESS. 1431 - BUSWAY	3	60	25	120	0					26	--	--	Space	--
--	--	--	--	27			120	0			28	--	--	Space	--
--	--	--	--	29					120	0	30	--	--	Space	--
--	Space	--	--	31	0	0					32	--	--	Space	--
--	Space	--	--	33			0	0			34	--	--	Space	--
--	Space	--	--	35					0	0	36	--	--	Space	--
--	Space	--	--	37	0	0					38	--	--	Space	--
--	Space	--	--	39			0	0			40	--	--	Space	--
--	Space	--	--	41					0	0	42	--	--	Space	--

CONNECTED (DOWNSTREAM LOADS INCLUDED)

PHASE	A	B	C	TOTALS
V-A	47605	53615	46608	147829
AMPS	172	194	168	178

DOWNSTREAM LOADS

LOAD SUMMARY WITH DOWNSTREAM LOADS INCLUDED

CATEGORY	CONNECTED	FACTOR	CALC. V-A	AMPS @ 480/277 Wye
LIGHTING				
RECEPTACLE	720	100.00%	720	1
MOTOR				
MISCELLANEOUS	87297	100.00%	87297	105
KITCHEN				
ELECTRIC HEAT	59955	100.00%	59955	72
TOTAL	147829 VA		147829 VA	178 A

CONDUCTOR COLORS (EC TO LABEL IN PANEL)

	208Y/120	480Y/277
A	BLACK	BROWN
B	RED	ORANGE
C	BLUE	YELLOW
N	WHITE	WHITE/GRAY STRIPE
G	GREEN	GREEN

UCC-A

<LONGVIEW POLICE>
LONGVIEW POLICE DEPARTMENT — M-E Engineers Inc. — PANEL: **UCC-A**

120/208 Wye; 3 Phase, 4 Wire + Gnd. 60Hz.; SCCR: REFER TO ONE-LINE kA
BUS: 150 A TIN PLATED COPPER; MAINS: 150 A - MCB; GROUD BAR: Copper
ENCLOSURE: Type 1; MOUTING: Recessed; FED FROM: TUCC-A; LEVEL: Level 1; LOCATION: CORRIDOR 1113; ISSUE DATE: 08/19/2020
NOTES:
OPTIONS: Subfeed Lugs: No; "SPD"
REFER TO DETAILS AND SPECIFICATION SECTION FOR PANELBOARD LAMINATED PLAQUE REQUIREMENTS.

N	DESCRIPTION	P	BRK	CKT	A (V-A)		B (V-A)		C (V-A)		CKT	BRK	P	DESCRIPTION	N
	ADMIN 1105 - RCPTS	1	20	1	720	833					2	30	2	SERVER RM RACK RCPTS	
	AUX CALL TAKER 1103 - RCPTS	1	20	3			540	833			4	--	--	--	--
	COMM CENTER - COPIER	1	20	5					1600	833	6	30	2	SERVER RM RACK RCPTS	
	CALL TAKER 1103 - RCPTS	1	20	7	1900	833					8	--	--	--	--
	DISPATCH WORKSTATION	1	20	9			360	833			10	30	2	SERVER RM RACK RCPTS	
	DISPATCH WORKSTATION	1	20	11					360	833	12	--	--	--	--
	DISPATCH WORKSTATION	1	20	13	360	833					14	30	2	SERVER RM RACK RCPTS	
	DISPATCH WORKSTATION	1	20	15			360	833			16	--	--	--	--
	DISPATCH WORKSTATION	1	20	17					360	833	18	30	2	SERVER RM RACK RCPTS	
	DISPATCH WORKSTATION	1	20	19	360	833					20	--	--	--	--
	DISPATCH WORKSTATION	1	20	21			360	833			22	30	2	SERVER RM RACK RCPTS	
	DISPATCH WORKSTATION	1	20	23					360	833	24	--	--	--	--
	DISPATCH WORKSTATION	1	20	25	360	833					26	30	2	SERVER RM RACK RCPTS	
	DISPATCH WORKSTATION	1	20	27			360	833			28	--	--	--	--
	DISPATCH WORKSTATION	1	20	29					360	833	30	30	2	SERVER RM RACK RCPTS	
	DISPATCH WORKSTATION	1	20	31	360	833					32	--	--	--	--
	DISPATCH WORKSTATION	1	20	33			360	833			34	30	2	SERVER RM RACK RCPTS	
	DISPATCH WORKSTATION	1	20	35					360	833	36	--	--	--	--
	DISPATCH WORKSTATION	1	20	37	360	833					38	30	2	SERVER RM RACK RCPTS	
	DISPATCH WORKSTATION	1	20	39			360	833			40	--	--	--	--
	DISPATCH WORKSTATION	1	20	41					360	360	42	20	1	DISPATCH FLRBOX	
	DISPATCH WORKSTATION	1	20	43	360	360					44	20	1	DISPATCH FLRBOX	
	DISPATCH WORKSTATION	1	20	45			360	1080			46	20	1	DISPATCH FLRBOX	
	DISPATCH WORKSTATION	1	20	47					360	360	48	20	1	DISPATCH RCPTS	
	DISPATCH WORKSTATION	1	20	49	360	800					50	20	1	DISPATCH TVS	
	DISPATCH WORKSTATION	1	20	51			360	1080			52	20	1	TRAINING CONSOLES 1107 RCPTS	
	MANAGER 1104 - RCPTS	1	20	53					180	900	54	20	1	TRAINING CONSOLES 1107 RCPTS	
	Spare	1	20	55	0	1100					56	20	1	TRAINING COORDINATOR 1108...	
	Spare	1	20	57			0	360			58	20	1	COMM CENTER - RCPTS	
	Spare	1	20	59					0	0	60	20	1	Spare	
	Spare	1	20	61	0	0					62	20	1	Spare	
	Spare	1	20	63			0	0			64	20	1	Spare	
	Spare	2	30	65					0	0	66	20	1	Spare	
--	--	--	--	67	0	0					68	20	1	Spare	
	Spare	2	30	69			0	0			70	20	1	Spare	
--	--	--	--	71					0	0	72	20	1	Spare	

CONNECTED (DOWNSTREAM LOADS INCLUDED)

PHASE	A	B	C	TOTALS
V-A	12685	11437	10470	34572
AMPS	107	97	87	96

DOWNSTREAM LOADS

LOAD SUMMARY WITH DOWNSTREAM LOADS INCLUDED

CATEGORY	CONNECTED	FACTOR	CALC. V-A	AMPS @ 120/208 Wye
LIGHTING				
RECEPTACLE	14904	83.55%	12452	35
MOTOR				
MISCELLANEOUS	19772	100.00%	19772	55
KITCHEN				
ELECTRIC HEAT				
TOTAL	34572 VA		32130 VA	89 A

CONDUCTOR COLORS (EC TO LABEL IN PANEL)

	208Y/120	480Y/277
A	BLACK	BROWN
B	RED	ORANGE
C	BLUE	YELLOW
N	WHITE	WHITE/GRAY STRIPE
G	GREEN	GREEN

E-R1A

<LONGVIEW POLICE>
LONGVIEW POLICE DEPARTMENT — M-E Engineers Inc. — PANEL: **E-R1A**

120/208 Wye; 3 Phase, 4 Wire + Gnd. 60Hz.; SCCR: REFER TO ONE-LINE kA
BUS: 100 A TIN PLATED COPPER; MAINS: 100 A - MCB; GROUD BAR: Copper
ENCLOSURE: Type 1; MOUTING: Surface; FED FROM: TE-R1A; LEVEL: Level 1; LOCATION: EMERGENCY POWER 1512; ISSUE DATE: 08/19/2020
NOTES:
OPTIONS: Subfeed Lugs: Yes; "SPD"
REFER TO DETAILS AND SPECIFICATION SECTION FOR PANELBOARD LAMINATED PLAQUE REQUIREMENTS.

N	DESCRIPTION	P	BRK	CKT	A (V-A)		B (V-A)		C (V-A)		CKT	BRK	P	DESCRIPTION	N
	Spare	1	20	1	0	180					2	20	1	SPRINKLER 1522 - RCPT	
	Spare	1	20	3			0	540			4	20	1	EM ELEC RM RCPTS	
	Spare	1	20	5					0	0	6	20	1	Spare	
	Spare	1	20	7	0	0					8	20	1	Spare	
	Spare	1	20	9			0	0			10	20	1	Spare	
	Spare	1	20	11					0	0	12	20	1	Spare	
	Spare	1	20	13	0	0					14	20	1	Spare	
	Spare	1	20	15			0	0			16	20	1	Spare	
	Spare	1	20	17					0	0	18	20	1	Spare	
	Spare	1	20	19	0	0					20	20	1	Spare	
	Spare	1	20	21			0	0			22	20	1	Spare	
	Spare	1	20	23					0	0	24	20	1	Spare	
	Spare	1	20	25	0	0					26	20	1	Spare	
	Spare	1	20	27			0	0			28	20	1	Spare	
	Spare	1	20	29					0	0	30	20	1	Spare	

CONNECTED (DOWNSTREAM LOADS INCLUDED)

PHASE	A	B	C	TOTALS
V-A	7305	6676	5069	19023
AMPS	63	58	42	53

DOWNSTREAM LOADS: E-R1B

LOAD SUMMARY WITH DOWNSTREAM LOADS INCLUDED

CATEGORY	CONNECTED	FACTOR	CALC. V-A	AMPS @ 120/208 Wye
LIGHTING				
RECEPTACLE	540	100.00%	540	1
MOTOR	10000	106.25%	10625	29
MISCELLANEOUS	8448	100.00%	8448	23
KITCHEN				
ELECTRIC HEAT				
TOTAL	19023 VA		19646 VA	55 A

CONDUCTOR COLORS (EC TO LABEL IN PANEL)

	208Y/120	480Y/277
A	BLACK	BROWN
B	RED	ORANGE
C	BLUE	YELLOW
N	WHITE	WHITE/GRAY STRIPE
G	GREEN	GREEN

S1-R1A

<LONGVIEW POLICE>
LONGVIEW POLICE DEPARTMENT — M-E Engineers Inc. — PANEL: **S1-R1A**

120/208 Wye; 3 Phase, 4 Wire + Gnd. 60Hz.; SCCR: REFER TO ONE-LINE kA
BUS: 250 A TIN PLATED COPPER; MAINS: 250 A - MCB; GROUD BAR: Copper
ENCLOSURE: Type 1; MOUTING: Surface; FED FROM: TS1-R1A; LEVEL: Level 1; LOCATION: EMERGENCY POWER 1512; ISSUE DATE: 08/19/2020
NOTES:
G - GFCI PROTECTED CIRCUIT BREAKER
1 - THIS BREAKER TO BE COORDINATED WITH GENERATOR SET MANUFACTURER
OPTIONS: Subfeed Lugs: Yes; "SPD"
REFER TO DETAILS AND SPECIFICATION SECTION FOR PANELBOARD LAMINATED PLAQUE REQUIREMENTS.

N	DESCRIPTION	P	BRK	CKT	A (V-A)		B (V-A)		C (V-A)		CKT	BRK	P	DESCRIPTION	N
	ARMORY 1521 - RCPTS	1	20	1	180	500					2	20	1	FUME HOOD 1401	G
	WEAPON CLEANING 1519 - RCPTS	1	20	3			720	1200			4	20	1	FREEZER 1414	G
	SWAT LOCKERS 1518 - RCPTS	1	20	5					900	400	6	20	1	PRIMARY LAB 1433 - UC FRIDGE	G
	SWAT LOCKERS 1518 - RCPTS	1	20	7	1440	3994					8	20	2	PRIMARY LAB 1433 - DISHWASHER	G
	SWAT LOCKERS 1518 - RCPTS	1	20	9			1440	3994			10	--	--	--	--
	SWAT LOCKERS 1518 - RCPTS	1	20	11					1440	500	12	20	1	RTU-2 CONTROL PWR	
	SWAT VEHICLE 1516 - RCPTS	1	20	13	540	500					14	20	1	RTU-3 CONTROL PWR	
	SWAT VEHICLE 1516 - RCPTS	1	20	15			720	1581			16	30	2	CU 1-04	
	OVERHEAD DOOR 1516	1	20	17					1000	1581	18	--	--	--	--
	SWAT VEHICLE 1516 - SHORE PWR	1	30	19	2000	1581					20	30	2	CU 1-06	
	SWAT VEHICLE 1516 - PROJECTOR	1	20	21			1200	1581			22	--	--	--	--
	ELEVATOR PIT PWR	1	20	23					180	1581	24	30	2	CU 1-03	
	ELEVATOR CAB PWR	1	20	25	500	1581					26	--	--	--	--
	DISPATCH MOTORIZED SHADES	1	20	27			1000	1581			28	30	2	CU 1-09	
	DISPATCH MOTORIZED SHADES	1	20	29					500	1581	30	--	--	--	--
	WALK-IN COOLER	3	20	31	1224	3328					32	40	2	CU 1-07	
--	--	--	--	33			1224	3328			34	--	--	--	--
--	--	--	--	35					1224	3328	36	40	2	CU 1-05	
	DISPATCH WORKSTATION	1	20	37	360	3328					38	--	--	--	--
	DISPATCH WORKSTATION	1	20	39			360	720			40	20	1	SOUTH SITE RCPTS	
	DISPATCH WORKSTATION	1	20	41					360	0	42	20	1	WALK-IN COOLER LIGHTING	
	DISPATCH WORKSTATION	1	20	43	360	180					44	20	1	STAFF ELEVATOR PIT POWER	
	DISPATCH WORKSTATION	1	20	45			360	920			46	100	3	S1-G	1
	DISPATCH WORKSTATION	1	20	47					360	2400	48	--	--	--	--
	DISPATCH WORKSTATION	1	20	49	360	1960					50	--	--	--	--
	DISPATCH WORKSTATION	1	20	51			360	360			52	20	1	DISPATCH WORKSTATION	
	DISPATCH WORKSTATION	1	20	53					360	360	54	20	1	DISPATCH WORKSTATION	
	DISPATCH WORKSTATION	1	20	55	360	0					56	20	1	Spare	
	DISPATCH WORKSTATION	1	20	57			360	0			58	20	1	Spare	
	DISPATCH WORKSTATION	1	20	59					360	0	60	20	1	Spare	
	DISPATCH WORKSTATION	1	20	61	360	0					62	20	1	Spare	
	DISPATCH WORKSTATION	1	20	63			360	0			64	20	1	Spare	
	DISPATCH WORKSTATION	1	20	65					360	0	66	20	1	Spare	
	DISPATCH WORKSTATION	1	20	67	360	0					68	20	1	Spare	
	DISPATCH WORKSTATION	1	20	69			360	0			70	20	1	Spare	
	DISPATCH WORKSTATION	1	20	71					360	0	72	20	1	Spare	

CONNECTED (DOWNSTREAM LOADS INCLUDED)

PHASE	A	B	C	TOTALS
V-A	24293	23274	18692	66250
AMPS	208	200	156	184

DOWNSTREAM LOADS: S1-G

LOAD SUMMARY WITH DOWNSTREAM LOADS INCLUDED

CATEGORY	CONNECTED	FACTOR	CALC. V-A	AMPS @ 120/208 Wye
LIGHTING	120	125%	150	0
RECEPTACLE	15291	82.70%	12646	35
MOTOR	6172	114.87%	7090	20
MISCELLANEOUS	44968	100.00%	44968	125
KITCHEN				
ELECTRIC HEAT				
TOTAL	66250 VA		64662 VA	179 A

CONDUCTOR COLORS (EC TO LABEL IN PANEL)

	208Y/120	480Y/277
A	BLACK	BROWN
B	RED	ORANGE
C	BLUE	YELLOW
N	WHITE	WHITE/GRAY STRIPE
G	GREEN	GREEN

S3-R1A

<LONGVIEW POLICE>
LONGVIEW POLICE DEPARTMENT — M-E Engineers Inc. — PANEL: **S3-R1A**

120/208 Wye; 3 Phase, 4 Wire + Gnd. 60Hz.; SCCR: REFER TO ONE-LINE kA
BUS: 150 A TIN PLATED COPPER; MAINS: 150 A - MCB; GROUD BAR: Copper
ENCLOSURE: Type 1; MOUTING: Surface; FED FROM: TS3-R1A; LEVEL: Level 1; LOCATION: EMERGENCY POWER 1512; ISSUE DATE: 08/19/2020
NOTES:
G - GFCI PROTECED CIRCUIT BREAKER
OPTIONS: Subfeed Lugs: No; "SPD"
REFER TO DETAILS AND SPECIFICATION SECTION FOR PANELBOARD LAMINATED PLAQUE REQUIREMENTS.

N	DESCRIPTION	P	BRK	CKT	A (V-A)		B (V-A)		C (V-A)		CKT	BRK	P	DESCRIPTION	N
	FLEET OFFICE 1511 - RCPTS	1	20	1	920	180					2	20	1	DRYING CABINETS 1442	G
	VEHICLE MAINT. BAY - RCPTS	1	20	3			900	180			4	20	1	DRYING CABINETS 1442	G
	VEHICLE MAINT. BAY - RCPTS	1	20	5					540	180	6	20	1	DRYING CABINETS 1442	G
	CENTRAL JAN 1504 - RCPTS	1	20	7	1080	180					8	20	1	DRYING CABINETS 1442	G
	MECHANICAL 1506 - RCPTS	1	20	9			360	900			10	20	1	PES STORAGE 1439 - RCPTS	
	VEHICLE PROCESS 1431 - RCPTS	1	20	11					540	1320	12	20	1	GWH-2	
	CLEAN DRESS 1432 - RCPTS	1	20	13	900	1320					14	20	1	GWH-1	
	DESTRUCTION 1429 - RCPTS	1	20	15			1260	864			16	20	1	DWCP-1	
	OVERHEAD DOOR 1431	1	20	17					1000	864	18	20	1	DWCP-2	
	VEHICLE PROCESS. 1431 - CORD...	1	20	19	180	400					20	20	1	RR VALVE PWR	
	OVERHEAD DOOR 1427	1	20	21			1000	2912			22	40	2	AC-1	
	OVERHEAD DOOR 1427	1	20	23					1000	2912	24	--	--	--	--
	MOTORIZED SHELF	1	20	25	1000	500					26	20	1	AD-1	
	MOTORIZED SHELF	1	20	27			1000	180			28	20	1	NORTH GATE ENTRY PWR	
	SUPPLY 1418 - RCPTS	1	20	29					900	1000	30	20	2	NORTH GATE ENTRY PWR	
	CORRIDOR 1443 - RCPTS	1	20	31	900	1000					32	--	--	--	--
	K-9 OFFICE	1	20	33			720	1000			34	20	2	NORTH GATE ENTRY PWR	
	UTILITY YARD RCPTS	1	20	35					720	1000	36	--	--	--	--
	BIKE PATROL 1601 - PLUGMOLD	1	20	37	1200	720					38	20	1	NORTH GATE ENTRY PWR	
	UTILITY YARD RCPTS	1	20	39			1260	500			40	20	1	EF 1-02	
	Spare	1	20	41					0	500	42	20	1	EF 1-01	
	Spare	1	20	43	0	500					44	20	2	EAST GATE ENTRANCE	
	Spare	1	20	45			0	500			46	--	--	--	--
	Spare	1	20	47					0	0	48	20	1	Spare	
	Spare	1	20	49	0	0					50	20	1	Spare	
	Spare	1	20	51			0	0			52	20	1	Spare	
	Spare	1	20	53					0	0	54	20	1	Spare	
	Spare	1	20	55	0	0					56	20	1	Spare	
	Spare	1	20	57			0	0			58	20	1	Spare	
	Spare	1	20	59					0	0	60	20	1	Spare	
	Spare	1	20	61	0	0					62	20	1	Spare	
	Spare	1	20	63			0	0			64	20	1	Spare	
	Spare	1	20	65					0	0	66	20	1	Spare	
	Spare	1	20	67	0	0					68	20	1	Spare	
	Spare	1	20	69			0	0			70	20	1	Spare	
	Spare	1	20	71					0	0	72	20	1	Spare	

CONNECTED (DOWNSTREAM LOADS INCLUDED)

PHASE	A	B	C	TOTALS
V-A	10980	13536	12476	36992
AMPS	92	115	106	103

DOWNSTREAM LOADS

LOAD SUMMARY WITH DOWNSTREAM LOADS INCLUDED

CATEGORY	CONNECTED	FACTOR	CALC. V-A	AMPS @ 120/208 Wye
LIGHTING				
RECEPTACLE	14700	84.01%	12350	34
MOTOR	19052	107.64%	20508	57
MISCELLANEOUS	3240	100.00%	3240	9
KITCHEN				
ELECTRIC HEAT				
TOTAL	36992 VA		36098 VA	100 A

CONDUCTOR COLORS (EC TO LABEL IN PANEL)

	208Y/120	480Y/277
A	BLACK	BROWN
B	RED	ORANGE
C	BLUE	YELLOW
N	WHITE	WHITE/GRAY STRIPE
G	GREEN	GREEN

UCC-B

<LONGVIEW POLICE>
LONGVIEW POLICE DEPARTMENT — M-E Engineers Inc. — PANEL: **UCC-B**

120/208 Wye; 3 Phase, 4 Wire + Gnd. 60Hz.; SCCR: REFER TO ONE-LINE kA
BUS: 150 A TIN PLATED COPPER; MAINS: 150 A - MCB; GROUD BAR: Copper
ENCLOSURE: Type 1; MOUTING: Recessed; FED FROM: TUCC-B; LEVEL: Level 1; LOCATION: CORRIDOR 1113; ISSUE DATE: 08/19/2020
NOTES:
OPTIONS: Subfeed Lugs: No; "SPD"
REFER TO DETAILS AND SPECIFICATION SECTION FOR PANELBOARD LAMINATED PLAQUE REQUIREMENTS.

N	DESCRIPTION	P	BRK	CKT	A (V-A)		B (V-A)		C (V-A)		CKT	BRK	P	DESCRIPTION	N
	DISPATCH WORKSTATION	1	20	1	360	360					2	20	1	SERVER RM RACK RCPTS	
	DISPATCH WORKSTATION	1	20	3			360	833			4	30	2	SERVER RM RACK RCPTS	
	DISPATCH WORKSTATION	1	20	5					360	833	6	--	--	--	--
	DISPATCH WORKSTATION	1	20	7	360	360					8	20	1	SERVER RM RACK RCPTS	
	DISPATCH WORKSTATION	1	20	9			360	833			10	30	2	SERVER RM RACK RCPTS	
	DISPATCH WORKSTATION	1	20	11					360	833	12	--	--	--	--
	DISPATCH WORKSTATION	1	20	13	360	360					14	20	1	SERVER RM RACK RCPTS	
	DISPATCH WORKSTATION	1	20	15			360	833			16	30	2	SERVER RM RACK RCPTS	
	DISPATCH WORKSTATION	1	20	17					360	833	18	--	--	--	--
	DISPATCH WORKSTATION	1	20	19	360	360					20	20	1	SERVER RM RACK RCPTS	
	DISPATCH WORKSTATION	1	20	21			360	833			22	30	2	SERVER RM RACK RCPTS	
	DISPATCH WORKSTATION	1	20	23					360	833	24	--	--	--	--
	DISPATCH WORKSTATION	1	20	25	360	360					26	20	1	SERVER RM RACK RCPTS	
	DISPATCH WORKSTATION	1	20	27			360	833			28	30	2	SERVER RM RACK RCPTS	
	DISPATCH WORKSTATION	1	20	29					360	833	30	--	--	--	--
	DISPATCH WORKSTATION	1	20	31	360	360					32	20	1	SERVER RM RACK RCPTS	
	DISPATCH WORKSTATION	1	20	33			360	833			34	30	2	SERVER RM RACK RCPTS	
	DISPATCH WORKSTATION	1	20	35					360	833	36	--	--	--	--
	SERVER RM RACK RCPTS	1	20	37	360	833					38	30	2	SERVER RM RACK RCPTS	
	SERVER RM RACK RCPTS	1	20	39			360	833			40	--	--	--	--
	SERVER RM RACK RCPTS	2	30	41					833	833	42	30	2	SERVER RM RACK RCPTS	
--	--	--	--	43	833	833					44	--	--	--	--
	SERVER RM RCPTS	1	20	45			720	360			46	20	1	SERVER RM RACK RCPTS	
	SERVER RM RCPTS	1	20	47					720	833	48	30	2	SERVER RM RACK RCPTS	
	SERVER RM RCPTS	1	20	49	720	833					50	--	--	--	--
	SECURITY PANEL 1116	1	20	51			360	0			52	20	1	Spare	
	SECURITY PANEL 1116	1	20	53					360	0	54	20	1	Spare	
	SERVER RM RCPTS	1	20	55	360	0					56	20	1	Spare	
	SERVER RM RACK RCPTS	1	20	57			360	0			58	20	1	Spare	
	Spare	1	20	59					0	0	60	20	1	Spare	
	Spare	1	20	61	0	0					62	20	1	Spare	
	Spare	1	20	63			0	0			64	20	1	Spare	
	Spare	2	30	65					0	0	66	20	1	Spare	
--	--	--	--	67	0	0					68	20	1	Spare	
	Spare	2	30	69			0	0			70	20	1	Spare	
--	--	--	--	71					0	0	72	20	1	Spare	

CONNECTED (DOWNSTREAM LOADS INCLUDED)

PHASE	A	B	C	TOTALS
V-A	8900	9956	10541	29396
AMPS	74	84	89	82

DOWNSTREAM LOADS

LOAD SUMMARY WITH DOWNSTREAM LOADS INCLUDED

CATEGORY	CONNECTED	FACTOR	CALC. V-A	AMPS @ 120/208 Wye
LIGHTING				
RECEPTACLE	12820	89.00%	11410	32
MOTOR				
MISCELLANEOUS	16660	100.00%	16660	46
KITCHEN				
ELECTRIC HEAT				
TOTAL	29396 VA		27992 VA	78 A

CONDUCTOR COLORS (EC TO LABEL IN PANEL)

	208Y/120	480Y/277
A	BLACK	BROWN
B	RED	ORANGE
C	BLUE	YELLOW
N	WHITE	WHITE/GRAY STRIPE
G	GREEN	GREEN

S1-G

<LONGVIEW POLICE>
LONGVIEW POLICE DEPARTMENT — M-E Engineers Inc. — PANEL: **S1-G**

120/208 Wye; 3 Phase, 4 Wire + Gnd. 60Hz.; SCCR:
BUS: 100 A TIN PLATED COPPER; MAINS: MLO; GROUD BAR: Copper
ENCLOSURE: Type 1; MOUTING: Surface; FED FROM: S1-R1A; LEVEL: Level 1; LOCATION:; ISSUE DATE: 08/19/2020
NOTES:
1. COORDINATE REQUIRED BREAKERS WITH GENERATOR MANUFACTURER
2. COORDINATE PROVISION OF THIS PANEL WITH GENERATOR EQUIPMENT MANUFACTURER
OPTIONS: Subfeed Lugs: No; "SPD"
REFER TO DETAILS AND SPECIFICATION SECTION FOR PANELBOARD LAMINATED PLAQUE REQUIREMENTS.

N	DESCRIPTION	P	BRK	CKT	A (V-A)		B (V-A)		C (V-A)		CKT	BRK	P	DESCRIPTION	N
	BATTERY CHARGER	1	20	1	800	120					2	20	1	Lighting	
	BATTERY CHARGER	1	20	3			800	1600			4	30	2	JACKET HEATER	
	CONV RCPTS	1	20	5					360	1600	6	--	--	--	--
	Spare	1	20	7	0	0					8	20	1	Spare	
	Spare	1	20	9			0	0			10	20	1	Spare	
	Spare	1	20	11					0	0	12	20	1	Spare	
	Spare	1	20	13	0	0					14	20	1	Spare	
	Spare	1	20	15			0	0			16	20	1	Spare	
	Spare	1	20	17					0	0	18	20	1	Spare	
	Spare	1	20	19	0	0					20	20	1	Spare	
	Spare	1	20	21			0	0			22	20	1	Spare	
	Spare	1	20	23					0	0	24	20	1	Spare	
	Spare	1	20	25	0	0					26	20	1	Spare	
	Spare	1	20	27			0	0			28	20	1	Spare	
	Spare	1	20	29					0	0	30	20	1	Spare	

CONNECTED (DOWNSTREAM LOADS INCLUDED)

PHASE	A	B	C	TOTALS
V-A	920	2400	1960	5280
AMPS	8	21	18	15

DOWNSTREAM LOADS

LOAD SUMMARY WITH DOWNSTREAM LOADS INCLUDED

CATEGORY	CONNECTED	FACTOR	CALC. V-A	AMPS @ 120/208 Wye
LIGHTING	120	125%	150	0
RECEPTACLE	360	100.00%	360	1
MOTOR				
MISCELLANEOUS	4800	100.00%	4800	13
KITCHEN				
ELECTRIC HEAT				
TOTAL	5280 VA		5310 VA	15 A

CONDUCTOR COLORS (EC TO LABEL IN PANEL)

	208Y/120	480Y/277
A	BLACK	BROWN
B	RED	ORANGE
C	BLUE	YELLOW
N	WHITE	WHITE/GRAY STRIPE
G	GREEN	GREEN

SCC-D1A	E-L1A	S1-L1A
UCC-A	E-R1A	S1-R1A
UCC-B	S3-R1A	S1-G

BRINKLEY SARGENT WIGINTON ARCHITECTS

Architect: Brinkley Sargent Wiginton Architects (972) 960-9970
Landscape: Kendall Landscape Architecture (214) 739-3226
Structural: L.A. Fuess Partners, Inc (214) 593-1118
MEP: M-E Engineers (214) 741-1589
Civil: KSA Engineers, Inc (903) 236-7700
Technology: M-E Engineers (303) 421-6656

LONGVIEW POLICE DEPARTMENT

518 W. SOUTH ST. LONGVIEW, TEXAS 75601

History

#	Date	Description

STATE OF TEXAS
ANDREW SHIVLEY
109010
LICENSED PROFESSIONAL ENGINEER
ME Engineers, Inc.
F-10231
08/19/2020

ELECTRICAL SCHEDULES

20513
08/19/2020
E004

BID ISSUE

C:\Revit Projects\2019\LPD_CENTRAL_E19_Derek.White97PLE.rvt
8/17/2020 9:48:25 AM

© 2020 Brinkley Sargent Wiginton Architects, Inc.

<LONGVIEW POLICE> LONGVIEW POLICE DEPARTMENT	M-E Engineers Inc.	PANEL:	**S3-L1B**
480/277 Wye	BUS: 250 A TIN PLATED COPPER	ENCLOSURE:	Type 1
3 Phase, 4 Wire + Gnd. 60Hz.	MAINS: MLO	MOUTING:	Surface
SCCR: REFER TO ONE-LINE kA	GROUD BAR: Copper	FED FROM:	S3-D1A
NOTES:	OPTIONS:	LEVEL:	Level 1
	Subfeed Lugs: Yes	LOCATION:	ELEC. CLOSET 1308
		ISSUE DATE:	08/19/2020
	"SPD"	REFER TO DETAILS AND SPECIFICATION SECTION FOR PANELBOARD LAMINATED PLAQUE REQUIREMENTS.	

N	DESCRIPTION	P	BRK	CKT	A (V-A)		B (V-A)		C (V-A)		CKT	BRK	P	DESCRIPTION	N
	FRONT PARKING POLE LTG	1	20	1	1050	406					2	20	1	HOLDING CELL, INTERROGATION...	
	FRONT PEDESTRIAN POLE LTG	1	20	3			440	991			4	20	1	SEX OFFND REG LTG, EVDNCE...	
	FLAG POLE UPLIGHTS	1	20	5					96	1300	6	20	1	PROP. STORAGE LTG	
	MEMORIAL WALL INGRADES	1	20	7	504	600					8	20	1	CRAWL SPACE LTG	
	WEST DRIVE PARKING POLES	1	20	9			450	931			10	20	1	VEHICLE MAINT. BAY LTG	
	STAFF PARKING POLE LTG	1	20	11					2176	1994	12	20	1	VAV 1-08	
	EAST DRIVE PARKING LIGHTING	1	20	13	900	1995					14	20	3	VAV 1-09	
	STAFF CANOPY POLE LTG	1	20	15			160	1995			16	--	--	--	--
	MONUMENT SIGN LTG	1	20	17					272	1995	18	--	--	--	--
	VAV 1-36	3	20	19	1663	3989					20	20	1	VAV 1-10	
--	--	--	--	21			1663	998			22	20	3	VAV 1-17	
--	--	--	--	23					1663	998	24	--	--	--	--
	UH 1-02	3	20	25	3326	998					26	--	--	--	--
--	--	--	--	27			3326	1663			28	20	3	UH 1-04	
--	--	--	--	29					3326	1663	30	--	--	--	--
	UH 1-03	3	20	31	3326	1663					32	--	--	--	--
--	--	--	--	33			3326	998			34	20	1	BBR 1-01/1-02	
--	--	--	--	35					3326	4986	36	20	1	EWH-1	
	TS3-R1B	3	70	37	10980	7008					38	40	1	VAV 1-05	
--	--	--	--	39			9160	779			40	20	1	PATROL LOCKERS LTG	
--	--	--	--	41					11916	726	42	20	1	LEVEL 1 CORRIDORS	
	Spare	1	20	43	0	66					44	20	1	ELEC CLOSET 1308 LTG	
	Spare	1	20	45			0	0			46	20	1	Spare	
	Spare	1	20	47					0	0	48	20	1	Spare	
	Spare	1	20	49	0	0					50	20	1	Spare	
	Spare	1	20	51			0	0			52	20	1	Spare	
	Spare	1	20	53					0	0	54	20	1	Spare	

CONNECTED (DOWNSTREAM LOADS INCLUDED)

PHASE	A	B	C	TOTALS
V-A	57194	49691	52838	159713
AMPS	208	179	193	192

DOWNSTREAM LOADS

SL3-L1B2, S3-R1B

LOAD SUMMARY WITH DOWNSTREAM LOADS INCLUDED

CATEGORY	CONNECTED	FACTOR	CALC. V-A	AMPS @ 480/277 Wye
LIGHTING	9051	125%	11314	14
RECEPTACLE	21280	73.50%	15640	19
MOTOR	2000	112.50%	2250	3
MISCELLANEOUS	2000	100.00%	2000	2
KITCHEN	5600	65.00%	3640	4
ELECTRIC HEAT	120823	100.00%	120823	145
TOTAL	159713 VA		154136 VA	185 A

CONDUCTOR COLORS (EC TO LABEL IN PANEL)

	208Y/120	480Y/277
A	BLACK	BROWN
B	RED	ORANGE
C	BLUE	YELLOW
N	WHITE	WHITE/GRAY STRIPE
G	GREEN	GREEN

<LONGVIEW POLICE> LONGVIEW POLICE DEPARTMENT	M-E Engineers Inc.	PANEL:	**S3-L1B2**
480/277 Wye	BUS: 250 A TIN PLATED COPPER	ENCLOSURE:	Type 1
3 Phase, 4 Wire + Gnd. 60Hz.	MAINS: MLO	MOUTING:	Surface
SCCR: REFER TO ONE-LINE kA	GROUD BAR: Copper	FED FROM:	S3-L1B
NOTES:	OPTIONS:	LEVEL:	Level 1
	Subfeed Lugs: No	LOCATION:	ELEC. CLOSET 1308
		ISSUE DATE:	08/19/2020
	"SPD"	REFER TO DETAILS AND SPECIFICATION SECTION FOR PANELBOARD LAMINATED PLAQUE REQUIREMENTS.	

N	DESCRIPTION	P	BRK	CKT	A (V-A)		B (V-A)		C (V-A)		CKT	BRK	P	DESCRIPTION	N
	VAV 1-31	3	20	1	3658	6011					2	30	1	VAV 1-28	
--	--	--	--	3			3658	6011			4	30	1	VAV 1-29	
--	--	--	--	5					3658	1994	6	20	1	VAV 1-25	
	VAV 1-24	1	20	7	1994	3989					8	20	1	VAV 1-21	
	VAV 1-22	1	40	9			8005	1994			10	20	1	VAV 1-23	
	VAV 1-11	1	40	11					7008	1994	12	20	1	VAV 1-18	
	VAV 1-20	1	20	13	1994	1994					14	20	1	VAV 1-33	
	VAV 1-34	1	20	15			2992	998			16	20	3	VAV 1-36	
	VAV 1-35	1	20	17					2992	998	18	--	--	--	--
	Spare	1	20	19	0	998					20	--	--	--	--
	Spare	1	20	21			0	0			22	20	1	Spare	
	Spare	1	20	23					0	0	24	20	1	Spare	
	Spare	1	20	25	0	0					26	20	1	Spare	
	Spare	1	20	27			0	0			28	20	1	Spare	
	Spare	1	20	29					0	0	30	20	1	Spare	
--	Space	--	--	31	0	0					32	20	1	Spare	
--	Space	--	--	33			0	0			34	--	--	Space	--
--	Space	--	--	35					0	0	36	--	--	Space	--
--	Space	--	--	37	0	0					38	--	--	Space	--
--	Space	--	--	39			0	0			40	--	--	Space	--
--	Space	--	--	41					0	0	42	--	--	Space	--

CONNECTED (DOWNSTREAM LOADS INCLUDED)

PHASE	A	B	C	TOTALS
V-A	20638	23658	18644	62939
AMPS	76	87	67	76

DOWNSTREAM LOADS

LOAD SUMMARY WITH DOWNSTREAM LOADS INCLUDED

CATEGORY	CONNECTED	FACTOR	CALC. V-A	AMPS @ 480/277 Wye
LIGHTING				
RECEPTACLE				
MOTOR				
MISCELLANEOUS				
KITCHEN				
ELECTRIC HEAT	62939	100.00%	62939	76
TOTAL	62939 VA		62939 VA	76 A

CONDUCTOR COLORS (EC TO LABEL IN PANEL)

	208Y/120	480Y/277
A	BLACK	BROWN
B	RED	ORANGE
C	BLUE	YELLOW
N	WHITE	WHITE/GRAY STRIPE
G	GREEN	GREEN

<LONGVIEW POLICE> LONGVIEW POLICE DEPARTMENT	M-E Engineers Inc.	PANEL:	**S3-R1B**
120/208 Wye	BUS: 150 A TIN PLATED COPPER	ENCLOSURE:	Type 1
3 Phase, 4 Wire + Gnd. 60Hz.	MAINS: 150 A - MCB	MOUTING:	Surface
SCCR: REFER TO ONE-LINE kA	GROUD BAR: Copper	FED FROM:	TS3-R1B
NOTES:	OPTIONS:	LEVEL:	Level 1
	Subfeed Lugs: No	LOCATION:	ELEC. CLOSET 1308
G - GFCI PROTECTED CIRCUIT BREAKER		ISSUE DATE:	08/19/2020
	"SPD"	REFER TO DETAILS AND SPECIFICATION SECTION FOR PANELBOARD LAMINATED PLAQUE REQUIREMENTS.	

N	DESCRIPTION	P	BRK	CKT	A (V-A)		B (V-A)		C (V-A)		CKT	BRK	P	DESCRIPTION	N
	CORRIDOR 1306 - RCPTS	1	20	1	1260	180					2	20	1	SUPERVISOR 1407 - RCPTS	
G	LARGE ICE MACHINE 1316	1	20	3			1400	180			4	20	1	EVIDENCE WORK 1404 - RCPTS	
	ICE DISPENSOR 1316	1	20	5					600	500	6	20	1	EVIDENCE 1404 FEED	
	ELECTRONIC KEY CABINET	1	20	7	860	500					8	20	1	EVIDENCE 1404 FEED	
	SOFT INTERVIEW 1006 - RCPTS	1	20	9			360	500			10	20	1	EVIDENCE 1404 FEED	
	COPY 1304 - COFFEE MACHINE	1	20	11					1200	500	12	20	1	EVIDENCE 1404 FEED	
G	COPY 1304 - UC FRIDGE	1	20	13	400	400					14	20	1	EVIDENCE 1404 - UC FRIDGE	G
	COPY 1304 - RCPTS	1	20	15			360	900			16	20	1	EVIDENCE 1404 - RCPTS	
	COPY 1304 - SHREDDER	1	20	17					1000	1260	18	20	1	EVIDENCE 1404 - RCPTS	
	COPY 1304 - COPIER	1	20	19	1000	740					20	20	1	EVID. VIEWING 1405 - RCPTS	
	CORRIDOR 1306 - RCPTS	1	20	21			900	1080			22	20	1	LOBBY RCPTS	
	VESTIBULE 1201 - RCPTS	1	20	23					1080	1200	24	20	1	COFFEE 1015 - COFFEE MACHINE	
	CORRIDOR 1121 - RCPTS	1	20	25	900	500					26	20	1	LOBBY KIOSKS	
	ELEC CLOSET 1308 - RCPT	1	20	27			180	500			28	20	1	LOBBY KIOSKS	
	RR VALVE PWR	1	20	29					600	180	30	20	1	PHOTO 1022 - RCPTS	
	RR VALVE PWR	1	20	31	200	1200					32	20	1	PHOTO 1022 - COFFEE MACHINE	
	RR VALVE PWR	1	20	33			600	400			34	20	1	PHOTO 1022 - UC FRIDGE	G
	SITE CHRISTMAS TREE PWR	1	20	35					900	1800	36	20	1	SEX OFFENDER REG 1019 - RCPTS	
	SITE CHRISTMAS TREE PWR	1	20	37	1080	540					38	20	1	WAITING 1018 - RCPTS	
	FIRE PROTECTION SYSTEM PWR	1	20	39			180	760			40	20	1	LOBBY TVS	
	STAFF CANOPY LTG	1	20	41					96	0	42	20	1	Spare	
	STAFF CANOPY GRILL PWR	1	20	43	180	0					44	20	1	Spare	
	STAFF CANOPY CONV PWR	1	20	45			360	0			46	20	1	Spare	
	WEST GATE ENTRANCE	2	20	47					500	0	48	20	1	Spare	
--	--	--	--	49	500	0					50	20	1	Spare	
	WEST GATE ENTRANCE	2	20	51			500	0			52	20	1	Spare	
--	--	--	--	53					500	0	54	20	1	Spare	
	WEST GATE RCPT.	1	20	55	540	0					56	20	1	Spare	
	Spare	1	20	57			0	0			58	20	1	Spare	
	Spare	1	20	59					0	0	60	20	1	Spare	
	Spare	1	20	61	0	0					62	20	1	Spare	
	Spare	1	20	63			0	0			64	20	1	Spare	
	Spare	1	20	65					0	0	66	20	1	Spare	
	Spare	1	20	67	0	0					68	20	1	Spare	
	Spare	1	20	69			0	0			70	20	1	Spare	
	Spare	1	20	71					0	0	72	20	1	Spare	

CONNECTED (DOWNSTREAM LOADS INCLUDED)

PHASE	A	B	C	TOTALS
V-A	10980	9160	11916	32056
AMPS	94	76	102	89

DOWNSTREAM LOADS

S3-R1B2

LOAD SUMMARY WITH DOWNSTREAM LOADS INCLUDED

CATEGORY	CONNECTED	FACTOR	CALC. V-A	AMPS @ 120/208 Wye
LIGHTING	96	125%	120	0
RECEPTACLE	21280	73.50%	15640	43
MOTOR	2000	112.50%	2250	6
MISCELLANEOUS	2000	100.00%	2000	6
KITCHEN	5600	65.00%	3640	10
ELECTRIC HEAT				
TOTAL	32056 VA		24730 VA	69 A

CONDUCTOR COLORS (EC TO LABEL IN PANEL)

	208Y/120	480Y/277
A	BLACK	BROWN
B	RED	ORANGE
C	BLUE	YELLOW
N	WHITE	WHITE/GRAY STRIPE
G	GREEN	GREEN

<LONGVIEW POLICE> LONGVIEW POLICE DEPARTMENT	M-E Engineers Inc.	PANEL:	**S2-L1B**
480/277 Wye	BUS: 400 A TIN PLATED COPPER	ENCLOSURE:	Type 1
3 Phase, 4 Wire + Gnd. 60Hz.	MAINS: MLO	MOUTING:	Surface
SCCR: REFER TO ONE-LINE kA	GROUD BAR: Copper	FED FROM:	ATS-S2
NOTES:	OPTIONS:	LEVEL:	Level 1
	Subfeed Lugs: Yes	LOCATION:	ELEC. CLOSET 1308
		ISSUE DATE:	08/19/2020
	"SPD"	REFER TO DETAILS AND SPECIFICATION SECTION FOR PANELBOARD LAMINATED PLAQUE REQUIREMENTS.	

N	DESCRIPTION	P	BRK	CKT	A (V-A)		B (V-A)		C (V-A)		CKT	BRK	P	DESCRIPTION	N
	RECORD CLRKS, SEC. DESK LTG	1	20	1	482	8005					2	40	1	VAV 1-06	
	LAB, EVID PROC. LTG	1	20	3			1894	2660			4	20	3	VAV 1-16	
	VAV 1-30	1	20	5					1994	2660	6	--	--	--	--
	VAV 1-32	3	20	7	1995	2660					8	--	--	--	--
--	--	--	--	9			1995	3989			10	20	1	VAV 1-19	
--	--	--	--	11					1995	997	12	20	1	VAV 1-26	
	Spare	1	20	13	0	0					14	20	1	Spare	
	Spare	1	20	15			0	0			16	20	1	Spare	
	Spare	1	20	17					0	0	18	20	1	Spare	
	Spare	1	20	19	0	0					20	20	1	Spare	
	Spare	1	20	21			0	0			22	20	1	Spare	
	Spare	1	20	23					0	0	24	20	1	Spare	
--	Space	--	--	25	0	0					26	--	--	Space	--
--	Space	--	--	27			0	0			28	--	--	Space	--
--	Space	--	--	29					0	0	30	--	--	Space	--
--	Space	--	--	31	0	0					32	--	--	Space	--
--	Space	--	--	33			0	0			34	--	--	Space	--
--	Space	--	--	35					0	0	36	--	--	Space	--
--	Space	--	--	37	0	7851					38	50	3	TS2-R1B	
--	Space	--	--	39			0	5703			40	--	--	--	--
--	Space	--	--	41					0	5297	42	--	--	--	--

CONNECTED (DOWNSTREAM LOADS INCLUDED)

PHASE	A	B	C	TOTALS
V-A	74823	67006	44953	186780
AMPS	282	254	162	225

DOWNSTREAM LOADS

S2-L2B, S2-L3B, S2-R1B

LOAD SUMMARY WITH DOWNSTREAM LOADS INCLUDED

CATEGORY	CONNECTED	FACTOR	CALC. V-A	AMPS @ 480/277 Wye
LIGHTING	5728	125%	7160	9
RECEPTACLE	43509	61.49%	26754	32
MOTOR	500	125.00%	625	1
MISCELLANEOUS	12520	100.00%	12520	15
KITCHEN	840	100.00%	840	1
ELECTRIC HEAT	123540	100.00%	123540	149
TOTAL	186780 VA		171586 VA	206 A

CONDUCTOR COLORS (EC TO LABEL IN PANEL)

	208Y/120	480Y/277
A	BLACK	BROWN
B	RED	ORANGE
C	BLUE	YELLOW
N	WHITE	WHITE/GRAY STRIPE
G	GREEN	GREEN

<LONGVIEW POLICE> LONGVIEW POLICE DEPARTMENT	M-E Engineers Inc.	PANEL:	**S2-R1B**
120/208 Wye	BUS: 100 A TIN PLATED COPPER	ENCLOSURE:	Type 1
3 Phase, 4 Wire + Gnd. 60Hz.	MAINS: 100 A - MCB	MOUTING:	Surface
SCCR: REFER TO ONE-LINE kA	GROUD BAR: Copper	FED FROM:	TS2-R1B
NOTES:	OPTIONS:	LEVEL:	Level 1
	Subfeed Lugs: No	LOCATION:	ELEC. CLOSET 1308
		ISSUE DATE:	08/19/2020
	"SPD"	REFER TO DETAILS AND SPECIFICATION SECTION FOR PANELBOARD LAMINATED PLAQUE REQUIREMENTS.	

N	DESCRIPTION	P	BRK	CKT	A (V-A)		B (V-A)		C (V-A)		CKT	BRK	P	DESCRIPTION	N
	SUPERVISOR 1305 - RCPTS	1	20	1	920	1080					2	20	1	COMPARISON LAB 1438 - RCPTS	
	RECORD CLERKS 1303 FEED	1	20	3			700	920			4	20	1	SERGEANT 1437 - RCPTS	
	RECORD CLERKS 1303 FEED	1	20	5					700	500	6	20	1	PES INVESTIGATORS 1436 FEED	
	RECORD CLERKS 1303 FEED	1	20	7	700	500					8	20	1	PES INVESTIGATORS 1436 FEED	
	RECORD CLERKS 1303 FEED	1	20	9			180	500			10	20	1	PES INVESTIGATORS 1436 FEED	
	RECORD CLERKS 1303 - RCPTS	1	20	11					1200	500	12	20	1	PES INVESTIGATORS 1436 FEED	
	SECURITY DESK 1016 - RCPTS	1	20	13	900	720					14	20	1	PES INVESTIGATORS 1436 - RCPTS	
	SECURITY DESK 1016 - RCPTS	1	20	15			720	1180			16	20	1	RECORDS CLERK INTERCOM PWR	
	MAJOR CASE 1402 - RCPTS	1	20	17					720	1080	18	20	1	EVID PROCESSING 1414 - RCPTS	
	EVID. WORK 1401 - RCPTS	1	20	19	900	720					20	20	1	ALTERNATE LIGHT 1435 - RCPTS	
	Spare	1	20	21			0	540			22	20	1	POWER PROCESS 1434 - RCPTS	
	Spare	1	20	23					0	180	24	20	1	FUME HOOD 1434	
	Spare	1	20	25	0	1000					26	20	1	FUME CHAMBER 1433	
	Spare	1	20	27			0	500			28	20	1	FUME CHAMBER 1433	
	Spare	1	20	29					0	540	30	20	1	PRIMARY LAB 1433 - RCPTS	
	Spare	1	20	31	0	540					32	20	1	PRIMARY LAB 1433 - RCPTS	
	Spare	1	20	33			0	700			34	20	1	PRIMARY LAB 1433 - EXAM LTG	
	Spare	1	20	35					0	0	36	20	1	Spare	
	Spare	1	20	37	0	0					38	20	1	Spare	
	Spare	1	20	39			0	0			40	20	1	Spare	
	Spare	1	20	41					0	0	42	20	1	Spare	

CONNECTED (DOWNSTREAM LOADS INCLUDED)

PHASE	A	B	C	TOTALS
V-A	7851	5703	5297	18829
AMPS	66	48	44	52

DOWNSTREAM LOADS

LOAD SUMMARY WITH DOWNSTREAM LOADS INCLUDED

CATEGORY	CONNECTED	FACTOR	CALC. V-A	AMPS @ 120/208 Wye
LIGHTING	700	125%	875	2
RECEPTACLE	12340	90.52%	11170	31
MOTOR				
MISCELLANEOUS	4900	100.00%	4900	14
KITCHEN	840	100.00%	840	2
ELECTRIC HEAT				
TOTAL	18829 VA		17809 VA	49 A

CONDUCTOR COLORS (EC TO LABEL IN PANEL)

	208Y/120	480Y/277
A	BLACK	BROWN
B	RED	ORANGE
C	BLUE	YELLOW
N	WHITE	WHITE/GRAY STRIPE
G	GREEN	GREEN

<LONGVIEW POLICE> LONGVIEW POLICE DEPARTMENT	M-E Engineers Inc.	PANEL:	**S3-L1C**
480/277 Wye	BUS: 250 A TIN PLATED COPPER	ENCLOSURE:	NEMA 3R
3 Phase, 4 Wire + Gnd. 60Hz.	MAINS: 250 A - MCB	MOUTING:	Surface
SCCR: REFER TO ONE-LINE FO...	GROUD BAR: Copper	FED FROM:	S3-D1A
NOTES:	OPTIONS:	LEVEL:	Level 1
	Subfeed Lugs: No	LOCATION:	
		ISSUE DATE:	08/19/2020
	"SPD"	REFER TO DETAILS AND SPECIFICATION SECTION FOR PANELBOARD LAMINATED PLAQUE REQUIREMENTS.	

N	DESCRIPTION	P	BRK	CKT	A (V-A)		B (V-A)		C (V-A)		CKT	BRK	P	DESCRIPTION	N
	GOLF CARTS 1604 LTG	1	20	1	1160	1663					2	20	3	UH 1-05	
	Spare	1	20	3			0	1663			4	--	--	--	--
	Spare	1	20	5					0	1663	6	--	--	--	--
	Spare	1	20	7	0	180					8	20	1	MOTORCYCLE HEAT TRACE	
	Spare	1	20	9			0	0			10	20	1	Spare	
	Spare	1	20	11					0	0	12	20	1	Spare	
	Spare	1	20	13	0	0					14	20	1	Spare	
	Spare	1	20	15			0	0			16	--	--	Space	--
	Spare	1	20	17					0	0	18	--	--	Space	--
	Spare	1	20	19	0	0					20	--	--	Space	--
--	Space	--	--	21			0	0			22	--	--	Space	--
--	Space	--	--	23					0	0	24	--	--	Space	--
--	Space	--	--	25	0	3200					26	50	3	TS3-R1A2	
--	Space	--	--	27			0	2446			28	--	--	--	--
--	Space	--	--	29					0	1947	30	--	--	--	--

CONNECTED (DOWNSTREAM LOADS INCLUDED)

PHASE	A	B	C	TOTALS
V-A	5623	4108	3608	13297
AMPS	21	15	13	16

DOWNSTREAM LOADS

S3-R1C2

LOAD SUMMARY WITH DOWNSTREAM LOADS INCLUDED

CATEGORY	CONNECTED	FACTOR	CALC. V-A	AMPS @ 480/277 Wye
LIGHTING	1160	125%	1450	2
RECEPTACLE	6412	100.00%	6412	8
MOTOR				
MISCELLANEOUS	1000	100.00%	1000	1
KITCHEN				
ELECTRIC HEAT	4988	100.00%	4988	6
TOTAL	13297 VA		13444 VA	16 A

CONDUCTOR COLORS (EC TO LABEL IN PANEL)

	208Y/120	480Y/277
A	BLACK	BROWN
B	RED	ORANGE
C	BLUE	YELLOW
N	WHITE	WHITE/GRAY STRIPE
G	GREEN	GREEN

<LONGVIEW POLICE> LONGVIEW POLICE DEPARTMENT	M-E Engineers Inc.	PANEL:	**S3-R1C**
120/208 Wye	BUS: 100 A TIN PLATED COPPER	ENCLOSURE:	NEMA 3R
3 Phase, 4 Wire + Gnd. 60Hz.	MAINS: 100 A - MCB	MOUTING:	Surface
SCCR: REFER TO ONE-LINE FO...	GROUD BAR: Copper	FED FROM:	TS3-R1C
NOTES:	OPTIONS:	LEVEL:	Level 1
	Subfeed Lugs: No	LOCATION:	
		ISSUE DATE:	08/19/2020
	"SPD"	REFER TO DETAILS AND SPECIFICATION SECTION FOR PANELBOARD LAMINATED PLAQUE REQUIREMENTS.	

N	DESCRIPTION	P	BRK	CKT	A (V-A)		B (V-A)		C (V-A)		CKT	BRK	P	DESCRIPTION	N
	MECH YARD RCPTS	1	20	1	1080	500					2	20	1	IRRIGATION CONTROLLER	
	MOTORCYCLE RCPTS	1	20	3			540	720			4	20	1	SOUTH SITE RCPTS	
	MOTORCYCLE RCPTS	1	20	5					540	720	6	20	1	SITE CHRISTMAS TREE PWR	
	MOTORCYCLE RCPTS	1	20	7	360	180					8	20	1	FIRE PROTECTION SYSTEM PWR	
	MOTORCYCLE RCPTS	1	20	9			540	180			10	20	1	GOLF CARTS 1604 CORD REEL	
	MOTORCYCLE RCPTS	1	20	11					540	180	12	20	1	GOLF CARTS 1604 CORD REEL	
	TRAILERS RCPTS	1	20	13	1080	0					14	20	1	Spare	
	RTU-1 CONTROL PWR	1	20	15			500	0			16	20	1	Spare	
	Spare	1	20	17					0	0	18	20	1	Spare	
	Spare	1	20	19	0	0					20	20	1	Spare	
	Spare	1	20	21			0	0			22	20	1	Spare	
	Spare	1	20	23					0	0	24	20	1	Spare	
	Spare	1	20	25	0	0					26	20	1	Spare	
	Spare	1	20	27			0	0			28	20	1	Spare	
	Spare	1	20	29					0	0	30	20	1	Spare	
	Spare	1	20	31	0	0					32	20	1	Spare	
	Spare	1	20	33			0	0			34	20	1	Spare	
	Spare	1	20	35					0	0	36	20	1	Spare	
	Spare	1	20	37	0	0					38	20	1	Spare	
	Spare	1	20	39			0	0			40	20	1	Spare	
	Spare	1	20	41					0	0	42	20	1	Spare	

CONNECTED (DOWNSTREAM LOADS INCLUDED)

PHASE	A	B	C	TOTALS
V-A	3200	2446	1947	7591
AMPS	27	21	16	21

DOWNSTREAM LOADS

LOAD SUMMARY WITH DOWNSTREAM LOADS INCLUDED

CATEGORY	CONNECTED	FACTOR	CALC. V-A	AMPS @ 120/208 Wye
LIGHTING				
RECEPTACLE	6412	100.00%	6412	18
MOTOR				
MISCELLANEOUS	1000	100.00%	1000	3
KITCHEN				
ELECTRIC HEAT				
TOTAL	7591 VA		7591 VA	21 A

CONDUCTOR COLORS (EC TO LABEL IN PANEL)

	208Y/120	480Y/277
A	BLACK	BROWN
B	RED	ORANGE
C	BLUE	YELLOW
N	WHITE	WHITE/GRAY STRIPE
G	GREEN	GREEN

<LONGVIEW POLICE> LONGVIEW POLICE DEPARTMENT	M-E Engineers Inc.	PANEL:	**E-L1B**
480/277 Wye	BUS: 250 A TIN PLATED COPPER	ENCLOSURE:	Type 1
3 Phase, 4 Wire + Gnd. 60Hz.	MAINS: MLO	MOUTING:	Surface
SCCR: REFER TO ONE-LINE kA	GROUD BAR: Copper	FED FROM:	E-L1A
NOTES:	OPTIONS:	LEVEL:	Level 1
	Subfeed Lugs: Yes	LOCATION:	ELEC. CLOSET 1308
		ISSUE DATE:	08/19/2020
	"SPD"	REFER TO DETAILS AND SPECIFICATION SECTION FOR PANELBOARD LAMINATED PLAQUE REQUIREMENTS.	

N	DESCRIPTION	P	BRK	CKT	A (V-A)		B (V-A)		C (V-A)		CKT	BRK	P	DESCRIPTION	N
	LEVEL 1 CORRIDORS	1	20	1	973	55					2	20	1	FIRST FLOOR EXIT SIGNS	
	FACADE LTG	1	20	3			420	40			4	20	1	FIRST FLOOR EXIT SIGNS	
	STAIR 03 LTG	1	20	5					72	80	6	20	1	SECOND FLOOR EXIT SIGNS	
	EL-01 SHAFT LTG	1	20	7	96	580					8	20	1	LEVEL 1 CORRIDORS EM	
	SP-1	3	20	9			443	443			10	20	3	SP-2	
--	--	--	--	11					443	443	12	--	--	--	--
--	--	--	--	13	443	443					14	--	--	--	--
	Spare	1	20	15			0	0			16	20	1	Spare	
	Spare	1	20	17					0	0	18	20	1	Spare	
	Spare	1	20	19	0	0					20	20	1	Spare	
	Spare	1	20	21			0	0			22	20	1	Spare	
	Spare	1	20	23					0	0	24	20	1	Spare	
	Spare	1	20	25	0	0					26	20	1	Spare	
	Spare	1	20	27			0	0			28	20	1	Spare	
	Spare	1	20	29					0	0	30	20	1	Spare	

CONNECTED (DOWNSTREAM LOADS INCLUDED)

PHASE	A	B	C	TOTALS
V-A	4185	1915	1704	7763
AMPS	15	7	6	9

DOWNSTREAM LOADS

E-L3B

LOAD SUMMARY WITH DOWNSTREAM LOADS INCLUDED

CATEGORY	CONNECTED	FACTOR	CALC. V-A	AMPS @ 480/277 Wye
LIGHTING	5119	125%	6399	8
RECEPTACLE				
MOTOR	2660	112.50%	2993	4
MISCELLANEOUS				
KITCHEN				
ELECTRIC HEAT				
TOTAL	7763 VA		9373 VA	11 A

CONDUCTOR COLORS (EC TO LABEL IN PANEL)

	208Y/120	480Y/277
A	BLACK	BROWN
B	RED	ORANGE
C	BLUE	YELLOW
N	WHITE	WHITE/GRAY STRIPE
G	GREEN	GREEN

S3-L1B	S2-L1B	S3-L1A
S3-L1B2	S2-R1B	S3-R1A2
S3-R1B		E-L1B

BRINKLEY SARGENT WIGINTON ARCHITECTS

Architect: Brinkley Sargent Wiginton Architects (972) 960-9970
Landscape: Kendall Landscape Architecture (214) 739-3226
Structural: L.A. Fuess Partners, Inc (214) 593-1118
MEP: M-E Engineers (214) 741-1589
Civil: KSA Engineers, Inc (903) 236-7700
Technology: M-E Engineers (303) 421-6656

LONGVIEW POLICE DEPARTMENT

518 W. SOUTH ST. LONGVIEW, TEXAS 75601

History

#	Date	Description

STATE OF TEXAS
ANDREW SHIVLEY
109010
LICENSED
PROFESSIONAL ENGINEER
ME Engineers, Inc.
F-10231
08/19/2020

ELECTRICAL SCHEDULES

20513
08/19/2020
E005

BID ISSUE

8/17/2020 9:48:29 AM
C:\Revit Projects\2019\LPD_CENTRAL_E19_Derek.White97PLE.rvt

© 2020 Brinkley Sargent Wiginton Architects, Inc.

<LONGVIEW POLICE> — PANEL: S2-R2B

LONGVIEW POLICE DEPARTMENT — M-E Engineers Inc.

120/208 Wye	BUS: 100 A TIN PLATED COPPER	ENCLOSURE:	Type 1
3 Phase, 4 Wire + Gnd. 60Hz.	MAINS: 100 A - MCB	MOUTING:	Surface
SCCR: REFER TO ONE-LINE kA	GROUD BAR: Copper	FED FROM:	TS2-R2B
NOTES:	OPTIONS: Subfeed Lugs: No "SPD"	LEVEL:	Level 2
		LOCATION:	ELEC. CLOSET 2124
		ISSUE DATE:	08/19/2020
		REFER TO DETAILS AND SPECIFICATION SECTION FOR PANELBOARD LAMINATED PLAQUE REQUIREMENTS.	

N	DESCRIPTION	P	BRK	CKT	A (V-A)		B (V-A)		C (V-A)		CKT	BRK	P	DESCRIPTION	N
	SERGEANT 2112 - RCPTS	1	20	1	1080	720					2	20	1	TRAFFIC UNIT 2135 - RCPTS	
	SERGEANT 2112 - RCPTS	1	20	3			1080	720			4	20	1	TRAFFIC UNIT 2135 - RCPTS	
	SERGEANT 2112 - RCPTS	1	20	5					1080	900	6	20	1	TRAFFIC UNIT 2135 - RCPTS	
	SERGEANT 2141 - RCPTS	1	20	7	1080	515					8	20	1	TRAFFIC UNIT 2135 - RCPTS	
	SERGEANT 2141 - RCPTS	1	20	9			540	1080			10	20	1	TRAFFIC SERGEANT 2136 - RCPTS	
	SERGEANT 2141 - RCPTS	1	20	11					1080	540	12	20	1	SERGEANT 2142 - RCPTS	
	LOW ROOF RCPTS	1	20	13	720	1080					14	20	1	SERGEANT 2142 - RCPTS	
	DSF 2-01/2-02	1	20	15			360	540			16	20	1	SERGEANT 2142 - RCPTS	
	SERGEANT 2112 - RCPTS	1	20	17					540	1080	18	20	1	SERGEANT 2142 - RCPTS	
	Spare	1	20	19	0	600					20	20	1	SERGEANT 2142 - TVS	
	Spare	1	20	21			0	1080			22	20	1	SERGEANT 2145 - RCPTS	
	Spare	1	20	23					0	380	24	20	1	SERGEANT 2145 - RCPTS	
	Spare	1	20	25	0	500					26	20	1	EF 2-01	
	Spare	1	20	27			0	264			28	20	3	EF 2-04	
	Spare	1	20	29					0	264	30	--	--	--	--
	Spare	1	20	31	0	264					32	--	--	--	--
	Spare	1	20	33			0	0			34	20	1	Spare	
	Spare	1	20	35					0	0	36	20	1	Spare	
	Spare	1	20	37	0	0					38	20	1	Spare	
	Spare	1	20	39			0	0			40	20	1	Spare	
	Spare	1	20	41					0	0	42	20	1	Spare	

CONNECTED (DOWNSTREAM LOADS INCLUDED)

PHASE	A	B	C	TOTALS
V-A	6549	5597	5864	18008
AMPS	55	47	49	50

DOWNSTREAM LOADS

LOAD SUMMARY WITH DOWNSTREAM LOADS INCLUDED

CATEGORY	CONNECTED	FACTOR	CALC. V-A	AMPS @ 120/208 Wye
LIGHTING				
RECEPTACLE	15915	81.42%	12958	36
MOTOR	500	125.00%	625	2
MISCELLANEOUS	1593	100.00%	1593	4
KITCHEN				
ELECTRIC HEAT				
TOTAL	18008 VA		15175 VA	42 A

CONDUCTOR COLORS (EC TO LABEL IN PANEL)

	208Y/120	480Y/277
A	BLACK	BROWN
B	RED	ORANGE
C	BLUE	YELLOW
N	WHITE	WHITE/GRAY STRIPE
G	GREEN	GREEN

<LONGVIEW POLICE> — PANEL: S2-L2B

LONGVIEW POLICE DEPARTMENT — M-E Engineers Inc.

480/277 Wye	BUS: 400 A TIN PLATED COPPER	ENCLOSURE:	Type 1
3 Phase, 4 Wire + Gnd. 60Hz.	MAINS: MLO	MOUTING:	Surface
SCCR: REFER TO ONE-LINE kA	GROUD BAR: Copper	FED FROM:	S2-L1B
NOTES:	OPTIONS: Subfeed Lugs: Yes "SPD"	LEVEL:	Level 2
		LOCATION:	ELEC. CLOSET 2124
		ISSUE DATE:	08/19/2020
		REFER TO DETAILS AND SPECIFICATION SECTION FOR PANELBOARD LAMINATED PLAQUE REQUIREMENTS.	

N	DESCRIPTION	P	BRK	CKT	A (V-A)		B (V-A)		C (V-A)		CKT	BRK	P	DESCRIPTION	N
	LTNS, SARGEANT 2112 LTG	1	20	1	950	5014					2	30	1	VAV 2-02	
	TRAFFIC UNIT LTG	1	20	3			304	1330			4	20	3	VAV 2-05	
	VAV 2-24	1	20	5					1994	1330	6	--	--	--	--
	VAV 2-25	1	20	7	1994	1330					8	--	--	--	--
	VAV 2-27	1	30	9			5014	7008			10	40	1	VAV 2-06	
	VAV 2-09	1	20	11					1994	1662	12	30	1	VAV 2-08	
	VAV 2-10	1	20	13	2992	997					14	20	3	VAV 2-16	
	Spare	1	20	15			0	997			16	--	--	--	--
	Spare	1	20	17					0	997	18	--	--	--	--
	Spare	1	20	19	0	1994					20	20	1	VAV 2-17	
	Spare	1	20	21			0	2993			22	20	1	VAV 2-22	
	Spare	1	20	23					0	0	24	20	1	Spare	
	Spare	1	20	25	0	0					26	20	1	Spare	
	Spare	1	20	27			0	0			28	20	1	Spare	
	Spare	1	20	29					0	0	30	--	--	Space	--
	Spare	1	20	31	0	0					32	--	--	Space	--
--	Space	--	--	33			0	0			34	--	--	Space	--
--	Space	--	--	35					0	0	36	--	--	Space	--
--	Space	--	--	37	0	6549					38	50	3	TS2-R2B	
--	Space	--	--	39			0	5597			40	--	--	--	--
--	Space	--	--	41					0	5864	42	--	--	--	--

CONNECTED (DOWNSTREAM LOADS INCLUDED)

PHASE	A	B	C	TOTALS
V-A	53838	50834	32024	136696
AMPS	205	194	116	164

DOWNSTREAM LOADS

S2-L3B, S2-L2B

LOAD SUMMARY WITH DOWNSTREAM LOADS INCLUDED

CATEGORY	CONNECTED	FACTOR	CALC. V-A	AMPS @ 480/277 Wye
LIGHTING	2776	125%	3470	4
RECEPTACLE	31214	66.02%	20607	25
MOTOR	500	125.00%	625	1
MISCELLANEOUS	7620	100.00%	7620	9
KITCHEN				
ELECTRIC HEAT	94588	100.00%	94588	114
TOTAL	136696 VA		126909 VA	153 A

CONDUCTOR COLORS (EC TO LABEL IN PANEL)

	208Y/120	480Y/277
A	BLACK	BROWN
B	RED	ORANGE
C	BLUE	YELLOW
N	WHITE	WHITE/GRAY STRIPE
G	GREEN	GREEN

<LONGVIEW POLICE> — PANEL: S3-R2B2

LONGVIEW POLICE DEPARTMENT — M-E Engineers Inc.

120/208 Wye	BUS: 250 A TIN PLATED COPPER	ENCLOSURE:	Type 1
3 Phase, 4 Wire + Gnd. 60Hz.	MAINS: MLO	MOUTING:	Surface
SCCR: REFER TO ONE-LINE kA	GROUD BAR: Copper	FED FROM:	S3-R2B
NOTES:	OPTIONS: Subfeed Lugs: No "SPD"	LEVEL:	Level 2
		LOCATION:	ELEC. CLOSET 2124
		ISSUE DATE:	08/19/2020
		REFER TO DETAILS AND SPECIFICATION SECTION FOR PANELBOARD LAMINATED PLAQUE REQUIREMENTS.	

N	DESCRIPTION	P	BRK	CKT	A (V-A)		B (V-A)		C (V-A)		CKT	BRK	P	DESCRIPTION	N
	TRAINING RM 2004 - FLRBOX	1	20	1	1080	1080					2	20	1	TRAINING RM 2004 - FLRBOX	
	TRAINING RM 2004 - TVS	1	20	3			400	720			4	20	1	TRAINING RM 2004 - RCPTS	
	TRAINING RM 2004 - PROJECTOR	1	20	5					1200	1440	6	20	1	TRAINING RM 2004 - FLRBOX	
	TRAINING RM 2004 - FLRBOX	1	20	7	1080	540					8	20	1	TRAINING RM 2004 - RCPTS	
	TRAINING RM 2004 - TVS	1	20	9			400	540			10	20	1	2ND FLOOR LOBBY 2001 - RCPTS	
G	WATER COOLER 2007	1	20	11					500	1200	12	20	1	CATERING 2003 - VENDING	G
G	CATERING 2003 - UC ICE	1	20	13	400	180					14	20	1	CATERING 2003 - RCPT	
	CATERING 2003 - MICROWAVE	1	20	15			1100	1200			16	20	1	CATERING 2003 - COFFEE MACHINE	
G	CATERING 2003 - FRIDGE	1	20	17					900	600	18	20	1	ICE DISPENSOR 2003	
	MENS RR RCPTS	1	20	19	720	540					20	20	1	STORAGE 2005 - RCPTS	
	TRAINING SGT 2019 - RCPTS	1	20	21			920	920			22	20	1	SERGEANT 2018 - RCPTS	
	INTERVIEW 2016 - RCPTS	1	20	23					900	1120	24	20	1	INTERVIEW 2016 - TVs	
G	OFFICERS 2012 - UC FRIDGE	1	20	25	180	180					26	20	1	OFFICERS 2012 - COFFEE	
	OFFICE 2012 - SHREDDER	1	20	27			180	180			28	20	1	OFFICERS 2012 - PRINTER	
	OFFICERS 2012 - COPIER	1	20	29					180	900	30	20	1	OFFICERS 2012 - RCPTS	
	OFFICERS 2012 FEED	1	20	31	700	1260					32	20	1	GENERAL STORAGE 2128 - RCPTS	
	QUARTERMASTER STOR 2131 -...	1	20	33			900	1080			34	20	1	SRO SERGEANTS 2126 - RCPTS	
	SRO SERGEANTS 2126 - RCPTS	1	20	35					540	1260	36	20	1	SRO SERGEANTS 2126 - RCPTS	
	2ND FLOOR LOBBY 2001 - RCPTS	1	20	37	1080	1440					38	20	1	LIEUTENANTS 2106 - RCPTS	
	CONF/LIEUTENANTS - TVS	1	20	39			800	900			40	20	1	ADMIN ASSIST 2103 - RCPTS	
	CONFERENCE 2108 - RCPTS	1	20	41					1080	900	42	20	1	CORRIDOR 2104 - RCPTS	
	Spare	1	20	43	0	0					44	20	1	Spare	
	Spare	1	20	45			0	0			46	20	1	Spare	
	Spare	1	20	47					0	0	48	20	1	Spare	
	Spare	1	20	49	0	0					50	20	1	Spare	
	Spare	1	20	51			0	0			52	20	1	Spare	
	Spare	1	20	53					0	0	54	20	1	Spare	

CONNECTED (DOWNSTREAM LOADS INCLUDED)

PHASE	A	B	C	TOTALS
V-A	11860	10791	12501	35140
AMPS	100	90	106	98

DOWNSTREAM LOADS

LOAD SUMMARY WITH DOWNSTREAM LOADS INCLUDED

CATEGORY	CONNECTED	FACTOR	CALC. V-A	AMPS @ 120/208 Wye
LIGHTING				
RECEPTACLE	23791	71.02%	16895	47
MOTOR				
MISCELLANEOUS	5063	100.00%	5063	14
KITCHEN	5400	65.00%	3510	10
ELECTRIC HEAT				
TOTAL	35140 VA		26356 VA	73 A

CONDUCTOR COLORS (EC TO LABEL IN PANEL)

	208Y/120	480Y/277
A	BLACK	BROWN
B	RED	ORANGE
C	BLUE	YELLOW
N	WHITE	WHITE/GRAY STRIPE
G	GREEN	GREEN

<LONGVIEW POLICE> — PANEL: S3-R2B

LONGVIEW POLICE DEPARTMENT — M-E Engineers Inc.

120/208 Wye	BUS: 250 A TIN PLATED COPPER	ENCLOSURE:	Type 1
3 Phase, 4 Wire + Gnd. 60Hz.	MAINS: 250 A - MCB	MOUTING:	Surface
SCCR: REFER TO ONE-LINE kA	GROUD BAR: Copper	FED FROM:	TS3-R2B
NOTES: G - PROVIDE GFCI PROTECTED CIRCUIT BREAKER	OPTIONS: Subfeed Lugs: Yes "SPD"	LEVEL:	Level 2
		LOCATION:	ELEC. CLOSET 2124
		ISSUE DATE:	08/19/2020
		REFER TO DETAILS AND SPECIFICATION SECTION FOR PANELBOARD LAMINATED PLAQUE REQUIREMENTS.	

N	DESCRIPTION	P	BRK	CKT	A (V-A)		B (V-A)		C (V-A)		CKT	BRK	P	DESCRIPTION	N
	PLANNING RESEARCH 2115 - RCPTS	1	20	1	720	720					2	20	1	JUVENILE CONF 2139 - RCPTS	
	PLANNING RESEARCH 2115 -...	1	20	3			180	720			4	20	1	EQUIP STORAGE 2143 - RCPTS	
	PLANNING RESEARCH 2115 - RCPTS	1	20	5					720	720	6	20	1	STORAGE 2137 - RCPTS	
	PLANNING RESEARCH 2115 - RCPTS	1	20	7	940	900					8	20	1	SPECIAL INVESTIGATIONS 2144 -...	
	RESEARCH SERGEANT 2116 -...	1	20	9			1840	720			10	20	1	SPECIAL INVESTIGATIONS 2144 -...	
	CORRIDOR 2015 - RCPTS	1	20	11					360	900	12	20	1	SPECIAL INVESTIGATIONS 2144 -...	
	MENS/WOMENS RR VALVE PWR	1	20	13	660	760					14	20	1	SPECIAL INVESTIGATIONS 2144 -...	
	QUIET RM 2204 - RCPTS	1	20	15			720	720			16	20	1	SPECIAL INVESTIGATIONS 2144 -...	
	QUIET RM 2203 - TVs	1	20	17					400	720	18	20	1	SPECIAL INVESTIGATIONS 2144 -...	
G	QUIET RM 2204 - UC FRIDGE	1	20	19	400	720					20	20	1	MENS/WOMENS RR RCPTS	
	CORRIDOR 2109 - RCPTS	1	20	21			360	540			22	20	1	EXERCISE 2215 - RCPTS	
	Spare	1	20	23					0	500	24	20	1	WATER COOLER 2216	G
	Spare	1	20	25	0	720					26	20	1	ELLIPTICAL 2215	
	Spare	1	20	27			0	800			28	20	1	ROWLER 2215	
	Spare	1	20	29					0	800	30	20	1	ROWLER 2215	
	Spare	1	20	31	0	800					32	20	1	ROWLER 2215	
	Spare	1	20	33			0	1500			34	20	1	TREADMILL 2215	
	Spare	1	20	35					0	800	36	20	1	EXERCISE 2215 - TVS	
	Spare	1	20	37	0	0					38	20	1	Spare	
	Spare	1	20	39			0	0			40	20	1	Spare	
	Spare	1	20	41					0	0	42	20	1	Spare	
	Spare	1	20	43	0	0					44	20	1	Spare	
	Spare	1	20	45			0	0			46	20	1	Spare	
	Spare	1	20	47					0	0	48	20	1	Spare	
	Spare	1	20	49	0	0					50	20	1	Spare	
	Spare	1	20	51			0	0			52	20	1	Spare	
	Spare	1	20	53					0	0	54	20	1	Spare	
	Spare	1	20	55	0	0					56	20	1	Spare	
	Spare	1	20	57			0	0			58	20	1	Spare	
	Spare	1	20	59					0	0	60	20	1	Spare	
	Spare	1	20	61	0	0					62	20	1	Spare	
	Spare	1	20	63			0	0			64	20	1	Spare	
	Spare	1	20	65					0	0	66	20	1	Spare	
	S3-R2B2	3	60	67	2395	0					68	20	1	Spare	
--	--	--	--	69			1900	0			70	20	1	Spare	
--	--	--	--	71					2218	0	72	20	1	Spare	

CONNECTED (DOWNSTREAM LOADS INCLUDED)

PHASE	A	B	C	TOTALS
V-A	21371	20570	20302	62218
AMPS	178	172	169	173

DOWNSTREAM LOADS

S3-R2B2, S3-R2C

LOAD SUMMARY WITH DOWNSTREAM LOADS INCLUDED

CATEGORY	CONNECTED	FACTOR	CALC. V-A	AMPS @ 120/208 Wye
LIGHTING				
RECEPTACLE	43092	61.60%	26546	74
MOTOR				
MISCELLANEOUS	12391	100.00%	12391	34
KITCHEN	5800	65.00%	3770	10
ELECTRIC HEAT				
TOTAL	62218 VA		43693 VA	121 A

CONDUCTOR COLORS (EC TO LABEL IN PANEL)

	208Y/120	480Y/277
A	BLACK	BROWN
B	RED	ORANGE
C	BLUE	YELLOW
N	WHITE	WHITE/GRAY STRIPE
G	GREEN	GREEN

<LONGVIEW POLICE> — PANEL: S3-L2B

LONGVIEW POLICE DEPARTMENT — M-E Engineers Inc.

480/277 Wye	BUS: 600 A TIN PLATED COPPER	ENCLOSURE:	Type 1
3 Phase, 4 Wire + Gnd. 60Hz.	MAINS: MLO	MOUTING:	Surface
SCCR: REFER TO ONE-LINE kA	GROUD BAR: Copper	FED FROM:	S3-D1A
NOTES:	OPTIONS: Subfeed Lugs: Yes "SPD"	LEVEL:	Level 2
		LOCATION:	ELEC. CLOSET 2124
		ISSUE DATE:	08/19/2020
		REFER TO DETAILS AND SPECIFICATION SECTION FOR PANELBOARD LAMINATED PLAQUE REQUIREMENTS.	

N	DESCRIPTION	P	BRK	CKT	A (V-A)		B (V-A)		C (V-A)		CKT	BRK	P	DESCRIPTION	N
	LOCKER RR'S, QUIET RM LTG	1	20	1	1063	6346					2	30	3	VAV 2-01	
	EXERCISE RMS/DRESSING RM LTG	1	20	3			445	6346			4	--	--	--	--
	PLNNNG 2115, QRTMSTR LTG	1	20	5					829	6346	6	--	--	--	--
	ELEC RM 2124 LTG	1	20	7	66	3326					8	20	3	VAV 2-03	
	TRAINING 2004, RR, OFFICE LTG	1	20	9			1797	3326			10	--	--	--	--
	LEVEL 2 CORRIDOR LTG	1	20	11					306	3326	12	--	--	--	--
	LEVEL 2 CORRIDORS	1	20	13	564	1994					14	20	1	VAV 2-04	
	VAV 2-34	1	40	15			8005	2992			16	20	1	VAV 2-07	
	VAV 2-35	3	20	17					4323	3989	18	20	1	VAV 2-11	
--	--	--	--	19	4323	9003					20	50	1	VAV 2-38	
--	--	--	--	21			4323	1330			22	20	3	VAV 2-13	
	VAV 2-36	1	20	23					2993	1330	24	--	--	--	--
	VAV 2-37	3	20	25	3326	1330					26	--	--	--	--
--	--	--	--	27			3326	1994			28	20	1	VAV 2-15	
--	--	--	--	29					3326	998	30	20	3	VAV 2-20	
	VAV 2-28	1	20	31	1994	998					32	--	--	--	--
	VAV 2-29	3	20	33			2660	998			34	--	--	--	--
--	--	--	--	35					2660	998	36	20	3	VAV 2-21	
--	--	--	--	37	2660	998					38	--	--	--	--
	VAV 2-30	1	30	39			5014	998			40	--	--	--	--
	VAV 2-32	1	20	41					1994	2993	42	20	1	VAV 2-23	
	VAV 2-33	3	20	43	3991	1994					44	20	1	VAV 2-26	
--	--	--	--	45			3991	1330			46	20	3	EF 2-02	
--	--	--	--	47					3991	1330	48	--	--	--	--
	Spare	1	20	49	0	1330					50	--	--	--	--
	Spare	1	20	51			0	1330			52	20	3	EF 3-01	
	Spare	1	20	53					0	1330	54	--	--	--	--
	Spare	1	20	55	0	1330					56	--	--	--	--
	Spare	1	20	57			0	0			58	20	1	Spare	
	Spare	1	20	59					0	0	60	20	1	Spare	
	Spare	1	20	61	0	0					62	20	1	Spare	
	Spare	1	20	63			0	0			64	20	1	Spare	
	Spare	1	20	65					0	0	66	20	1	Spare	
	S3-L3B	3	400	67	39887	21371					68	125	3	TS3-R2B	
--	--	--	--	69			45490	20570			70	--	--	--	--
--	--	--	--	71					47688	20302	72	--	--	--	--

CONNECTED (DOWNSTREAM LOADS INCLUDED)

PHASE	A	B	C	TOTALS
V-A	107857	116218	110954	335024
AMPS	389	421	402	403

DOWNSTREAM LOADS

S3-L3B

LOAD SUMMARY WITH DOWNSTREAM LOADS INCLUDED

CATEGORY	CONNECTED	FACTOR	CALC. V-A	AMPS @ 480/277 Wye
LIGHTING	9858	125%	12322	15
RECEPTACLE	76966	56.50%	43483	52
MOTOR	7982	112.50%	8980	11
MISCELLANEOUS	46910	100.00%	46910	56
KITCHEN	6200	65.00%	4030	5
ELECTRIC HEAT	185809	100.00%	185809	223
TOTAL	335024 VA		302870 VA	364 A

CONDUCTOR COLORS (EC TO LABEL IN PANEL)

	208Y/120	480Y/277
A	BLACK	BROWN
B	RED	ORANGE
C	BLUE	YELLOW
N	WHITE	WHITE/GRAY STRIPE
G	GREEN	GREEN

<LONGVIEW POLICE> — PANEL: S3-R2C

LONGVIEW POLICE DEPARTMENT — M-E Engineers Inc.

120/208 Wye	BUS: 60 A TIN PLATED COPPER	ENCLOSURE:	Type 1
3 Phase, 4 Wire + Gnd. 60Hz.	MAINS: MLO	MOUTING:	Recessed
SCCR: REFER TO ONE-LINE kA	GROUD BAR: Copper	FED FROM:	S3-R2B
NOTES:	OPTIONS: Subfeed Lugs: No "SPD"	LEVEL:	Level 2
		LOCATION:	VESTIBULE 2021
		ISSUE DATE:	08/19/2020
		REFER TO DETAILS AND SPECIFICATION SECTION FOR PANELBOARD LAMINATED PLAQUE REQUIREMENTS.	

N	DESCRIPTION	P	BRK	CKT	A (V-A)		B (V-A)		C (V-A)		CKT	BRK	P	DESCRIPTION	N
	SIMULATOR 2022 RCPTS	1	20	1	720	1600					2	20	1	TRAINING SIM 2022	
	SIMULATOR 2022 CABINET	1	20	3			360	1600			4	20	1	TRAINING SIM 2022	
	SIMULATOR 2022 RCPTS	1	20	5					720	1600	6	20	1	TRAINING SIM 2022	
	SIMULATOR 2022 PROJECTOR	1	20	7	180	0					8	20	1	Spare	
	Spare	1	20	9			0	0			10	20	1	Spare	
	Spare	1	20	11					0	0	12	20	1	Spare	
	Spare	1	20	13	0	0					14	20	1	Spare	
	Spare	1	20	15			0	0			16	20	1	Spare	
	Spare	1	20	17					0	0	18	20	1	Spare	
	Spare	1	20	19	0	0					20	20	1	Spare	
	Spare	1	20	21			0	0			22	20	1	Spare	
	Spare	1	20	23					0	0	24	20	1	Spare	
	Spare	1	20	25	0	0					26	20	1	Spare	
	Spare	1	20	27			0	0			28	20	1	Spare	
	Spare	1	20	29					0	0	30	20	1	Spare	

CONNECTED (DOWNSTREAM LOADS INCLUDED)

PHASE	A	B	C	TOTALS
V-A	2395	1900	2218	6510
AMPS	20	16	19	18

DOWNSTREAM LOADS

LOAD SUMMARY WITH DOWNSTREAM LOADS INCLUDED

CATEGORY	CONNECTED	FACTOR	CALC. V-A	AMPS @ 120/208 Wye
LIGHTING				
RECEPTACLE	1947	100.00%	1947	5
MOTOR				
MISCELLANEOUS	4800	100.00%	4800	13
KITCHEN				
ELECTRIC HEAT				
TOTAL	6510 VA		6510 VA	18 A

CONDUCTOR COLORS (EC TO LABEL IN PANEL)

	208Y/120	480Y/277
A	BLACK	BROWN
B	RED	ORANGE
C	BLUE	YELLOW
N	WHITE	WHITE/GRAY STRIPE
G	GREEN	GREEN

<LONGVIEW POLICE> — PANEL: S1-R2B

LONGVIEW POLICE DEPARTMENT — M-E Engineers Inc.

120/208 Wye	BUS: 250 A TIN PLATED COPPER	ENCLOSURE:	Type 1
3 Phase, 4 Wire + Gnd. 60Hz.	MAINS: 250 A - MCB	MOUTING:	Surface
SCCR: REFER TO ONE-LINE kA	GROUD BAR: Copper	FED FROM:	TS1-R2B
NOTES: G - PROVIDE GFCI PROTECTED CIRCUIT BREAKER	OPTIONS: Subfeed Lugs: Yes "SPD"	LEVEL:	Level 2
		LOCATION:	ELEC. CLOSET 2124
		ISSUE DATE:	08/19/2020
		REFER TO DETAILS AND SPECIFICATION SECTION FOR PANELBOARD LAMINATED PLAQUE REQUIREMENTS.	

N	DESCRIPTION	P	BRK	CKT	A (V-A)		B (V-A)		C (V-A)		CKT	BRK	P	DESCRIPTION	N
	BRIEFING 2113 - FLRBOX	1	20	1	1800	180					2	20	1	VENDING MACHINE 2138	G
	BRIEFING 2113 - FLRBOX	1	20	3			1440	180			4	20	1	VENDING MACHINE 2138	G
	BRIEFING 2113 - RCPTS	1	20	5					600	360	6	20	1	BREAKROOM KIOSKS	
	BRIEFING 2113 - TVs	1	20	7	800	900					8	20	1	BREAKROOM 2138 - FRIDGE	G
	CORRIDOR 2109 - TVs	1	20	9			400	1200			10	20	2	BREAKROOM 2138 - OVEN	G
	CORRIDOR 2109 - RCPTS	1	20	11					1620	1200	12	--	--	--	--
	MAIL 2123 - COPIER	1	20	13	1100	1200					14	20	2	BREAKROOM 2138 - OVEN	G
	CORRIDOR 2109 - RCPTS	1	20	15			1040	1200			16	--	--	--	--
	REPORT WRITING 2117 FEED	1	20	17					700	1100	18	20	1	BREAKROOM 2138 - MICROWAVE	
	REPORT WRITING 2117 FEED	1	20	19	700	900					20	20	1	BREAKROOM 2138 - DISHWASHER	G
	REPORT WRITING 2117 FEED	1	20	21			700	1100			22	20	1	BREAKROOM 2138 - MICROWAVE	
	REPORT WRITING 2117 FEED	1	20	23					700	720	24	20	1	BREAKROOM 2138 - RCPTS	
	IT WORKROOM 1115 - RCPTS	1	20	25	1080	400					26	20	1	BREAKROOM 2138 - UC ICE	G
	IT WORKROOM 1115 - RCPTS	1	20	27			1080	1200			28	20	1	BREAK 1112 - MICROWAVE	
	IT WORKROOM 1115 - RCPTS	1	20	29					1080	1600	30	20	1	BREAK 1112 - COFFEE MACHINE	
	IT WORKROOM 1115 - RCPTS	1	20	31	720	200					32	20	1	BREAK 1112 - TV	
	CONF 1114 - RCPTS	1	20	33			1260	900			34	20	1	BREAK 1112 - FRIDGE	G
	CONF 1113 - TV	1	20	35					200	360	36	20	1	BREAK 1112 - RCPTS	
	Spare	1	20	37	0	1100					38	20	1	ADMIN ASSIST 1106 - RCPTS	
	Spare	1	20	39			0	692			40	20	1	BREAKROOM 2138 - ISLAND RCPTS	
	Spare	1	20	41					0	361	42	20	1	BREAKROOM 2138 - TV	
	Spare	1	20	43	0	360					44	20	1	CORRIDOR 2114 - RCPTS	
	Spare	1	20	45			0	180			46	20	1	ELEC CLOSET 2124 RCPT	
	Spare	1	20	47					0	500	48	20	1	EF 2-03	
	Spare	1	20	49	0	0					50	20	1	Spare	
	Spare	1	20	51			0	0			52	20	1	Spare	
	Spare	1	20	53					0	0	54	20	1	Spare	
	Spare	1	20	55	0	0					56	20	1	Spare	
	Spare	1	20	57			0	0			58	20	1	Spare	
	Spare	1	20	59					0	0	60	20	1	Spare	
	Spare	1	20	61	0	0					62	20	1	Spare	
	Spare	1	20	63			0	0			64	20	1	Spare	
	Spare	1	20	65					0	0	66	20	1	Spare	
	S1-R2C	3	125	67	13900	11842					68	125	3	S1-R3B	
--	--	--	--	69			17020	9702			70	--	--	--	--
--	--	--	--	71					10620	8262	72	--	--	--	--

CONNECTED (DOWNSTREAM LOADS INCLUDED)

PHASE	A	B	C	TOTALS
V-A	36871	39150	29698	105715
AMPS	316	335	247	293

DOWNSTREAM LOADS

S1-R3B, S1-R2C

LOAD SUMMARY WITH DOWNSTREAM LOADS INCLUDED

CATEGORY	CONNECTED	FACTOR	CALC. V-A	AMPS @ 120/208 Wye
LIGHTING	80	125%	100	0
RECEPTACLE	65757	57.60%	37879	105
MOTOR	3500	107.14%	3750	10
MISCELLANEOUS	22807	100.00%	22807	63
KITCHEN	12900	65.00%	8385	23
ELECTRIC HEAT				
TOTAL	105715 VA		73594 VA	204 A

CONDUCTOR COLORS (EC TO LABEL IN PANEL)

	208Y/120	480Y/277
A	BLACK	BROWN
B	RED	ORANGE
C	BLUE	YELLOW
N	WHITE	WHITE/GRAY STRIPE
G	GREEN	GREEN

<LONGVIEW POLICE> — PANEL: S1-L2B

LONGVIEW POLICE DEPARTMENT — M-E Engineers Inc.

480/277 Wye	BUS: 250 A TIN PLATED COPPER	ENCLOSURE:	Type 1
3 Phase, 4 Wire + Gnd. 60Hz.	MAINS: MLO	MOUTING:	Surface
SCCR: REFER TO ONE-LINE kA	GROUD BAR: Copper	FED FROM:	S1-D1A
NOTES:	OPTIONS: Subfeed Lugs: No "SPD"	LEVEL:	Level 2
		LOCATION:	ELEC. CLOSET 2124
		ISSUE DATE:	08/19/2020
		REFER TO DETAILS AND SPECIFICATION SECTION FOR PANELBOARD LAMINATED PLAQUE REQUIREMENTS.	

N	DESCRIPTION	P	BRK	CKT	A (V-A)		B (V-A)		C (V-A)		CKT	BRK	P	DESCRIPTION	N
	LOCKER ROOM LTG	1	20	1	575	594					2	20	1	LEVEL 1 IT WORKROOM	
	VAV 2-19	3	20	3			4323	1812			4	20	1	SERVER RM/COMM CENTER LTG	
--	--	--	--	5					4323	576	6	20	1	SWAT VEHICLE, WEAPON LTG	
--	--	--	--	7	4323	0					8	20	1	Spare	
	VAV 2-14	1	30	9			6011	0			10	20	1	Spare	
	VAV 2-18	1	20	11					2992	0	12	20	1	Spare	
	Spare	1	20	13	0	0					14	20	1	Spare	
	Spare	1	20	15			0	0			16	20	1	Spare	
	Spare	1	20	17					0	0	18	20	1	Spare	
	Spare	1	20	19	0	0					20	20	1	Spare	
--	Space	--	--	21			0	0			22	20	1	Spare	
--	Space	--	--	23					0	0	24	20	1	Spare	
--	Space	--	--	25	0	0					26	--	--	Space	--
--	Space	--	--	27			0	0			28	--	--	Space	--
--	Space	--	--	29					0	0	30	--	--	Space	--
--	Space	--	--	31	0	0					32	--	--	Space	--
--	Space	--	--	33			0	0			34	--	--	Space	--
--	Space	--	--	35					0	0	36	--	--	Space	--
	TS1-R2B	3	125	37	36871	0					38	--	--	Space	--
--	--	--	--	39			39150	0			40	--	--	Space	--
--	--	--	--	41					29698	0	42	--	--	Space	--

CONNECTED (DOWNSTREAM LOADS INCLUDED)

PHASE	A	B	C	TOTALS
V-A	43123	51295	37450	131862
AMPS	159	188	135	159

DOWNSTREAM LOADS

S1-R2B, S1-R2C, S1-R3B

LOAD SUMMARY WITH DOWNSTREAM LOADS INCLUDED

CATEGORY	CONNECTED	FACTOR	CALC. V-A	AMPS @ 480/277 Wye
LIGHTING	4269	125%	5337	6
RECEPTACLE	65757	57.60%	37879	46
MOTOR	3500	107.14%	3750	5
MISCELLANEOUS	22807	100.00%	22807	27
KITCHEN	12900	65.00%	8385	10
ELECTRIC HEAT	21973	100.00%	21973	26
TOTAL	131862 VA		100786 VA	121 A

CONDUCTOR COLORS (EC TO LABEL IN PANEL)

	208Y/120	480Y/277
A	BLACK	BROWN
B	RED	ORANGE
C	BLUE	YELLOW
N	WHITE	WHITE/GRAY STRIPE
G	GREEN	GREEN

<LONGVIEW POLICE> — PANEL: S1-R2C

LONGVIEW POLICE DEPARTMENT — M-E Engineers Inc.

120/208 Wye	BUS: 125 A TIN PLATED COPPER	ENCLOSURE:	Type 1
3 Phase, 4 Wire + Gnd. 60Hz.	MAINS: MLO	MOUTING:	Recessed
SCCR: REFER TO ONE-LINE kA	GROUD BAR: Copper	FED FROM:	S1-R2B
NOTES:	OPTIONS: Subfeed Lugs: No "SPD"	LEVEL:	Level 2
		LOCATION:	CORR. 2206
		ISSUE DATE:	08/19/2020
		REFER TO DETAILS AND SPECIFICATION SECTION FOR PANELBOARD LAMINATED PLAQUE REQUIREMENTS.	

N	DESCRIPTION	P	BRK	CKT	A (V-A)		B (V-A)		C (V-A)		CKT	BRK	P	DESCRIPTION	N
	LOCKER 2213 RCPTS	1	20	1	1800	1800					2	20	1	LOCKER 2213 RCPTS	
	LOCKER 2213 RCPTS	1	20	3			1800	1800			4	20	1	LOCKER 2213 RCPTS	
	ACCESSIBLE SHOWER 2211 - RCPTS	1	20	5					180	1620	6	20	1	LOCKER 2213 RCPTS	
	LOCKER 2213 RCPTS	1	20	7	1080	1080					8	20	1	LOCKER 2213 RCPTS	
	LOCKER 2213 RCPTS	1	20	9			1800	1800			10	20	1	LOCKER 2213 RCPTS	
	LOCKER 2213 RCPTS	1	20	11					1260	1080	12	20	1	LOCKER 2213 RCPTS	
	LOCKER 2213 RCPTS	1	20	13	1080	1260					14	20	1	LOCKER 2213 RCPTS	
	LOCKER 2213 RCPTS	1	20	15			1800	1800			16	20	1	LOCKER 2213 RCPTS	
	LOCKER 2213 RCPTS	1	20	17					720	1260	18	20	1	LOCKER 2213 RCPTS	
	LOCKER 2213 RCPTS	1	20	19	1080	1080					20	20	1	LOCKER 2213 RCPTS	
	LOCKER 2213 RCPTS	1	20	21			1800	1800			22	20	1	LOCKER 2213 RCPTS	
	LOCKER 2213 RCPTS	1	20	23					1800	1620	24	20	1	LOCKER 2213 RCPTS	
G	COMM DRYER	2	30	25	2080	1200					26	20	1	COMM WASHER	G
--	--	--	--	27			2080	360			28	20	1	SHOWER 2224 - RCPTS	
	LOCKER RM 2213 - RCPTS	1	20	29					900	180	30	20	1	SHOWER 2226 - RCPT	
	SHOWER 2227 - RCPT	1	20	31	180	180					32	20	1	ACCESSIBLE SHOWER 2228 - RCPT	
	ACCESSIBLE SHOWER 2229 - RCPT	1	20	33			180	0			34	20	1	Spare	
	Spare	1	20	35					0	0	36	20	1	Spare	
	Spare	1	20	37	0	0					38	20	1	Spare	
	Spare	1	20	39			0	0			40	20	1	Spare	
	Spare	1	20	41					0	0	42	20	1	Spare	
	Spare	1	20	43	0	0					44	20	1	Spare	
	Spare	1	20	45			0	0			46	20	1	Spare	
	Spare	1	20	47					0	0	48	20	1	Spare	
	Spare	1	20	49	0	0					50	20	1	Spare	
	Spare	1	20	51			0	0			52	20	1	Spare	
	Spare	1	20	53					0	0	54	20	1	Spare	

CONNECTED (DOWNSTREAM LOADS INCLUDED)

PHASE	A	B	C	TOTALS
V-A	13900	17020	10620	41540
AMPS	120	146	89	115

DOWNSTREAM LOADS

LOAD SUMMARY WITH DOWNSTREAM LOADS INCLUDED

CATEGORY	CONNECTED	FACTOR	CALC. V-A	AMPS @ 120/208 Wye
LIGHTING				
RECEPTACLE	41540	62.04%	25770	72
MOTOR				
MISCELLANEOUS				
KITCHEN				
ELECTRIC HEAT				
TOTAL	41540 VA		25770 VA	72 A

CONDUCTOR COLORS (EC TO LABEL IN PANEL)

	208Y/120	480Y/277
A	BLACK	BROWN
B	RED	ORANGE
C	BLUE	YELLOW
N	WHITE	WHITE/GRAY STRIPE
G	GREEN	GREEN

S2-R2B	S3-R2B	S1-R2B
S2-L2B	S3-L2B	S1-L2B
S3-R2B2	S3-R2C	S3-R2C

BRINKLEY SARGENT WIGINTON ARCHITECTS

Architect: Brinkley Sargent Wiginton Architects (972) 960-9970
Landscape: Kendall Landscape Architecture (214) 739-3226
Structural: L.A. Fuess Partners, Inc (214) 593-1118
MEP: M-E Engineers (214) 741-1589
Civil: KSA Engineers, Inc (903) 236-7700
Technology: M-E Engineers (303) 421-6656

LONGVIEW POLICE DEPARTMENT

518 W. SOUTH ST. LONGVIEW, TEXAS 75601

History

#	Date	Description

STATE OF TEXAS — ANDREW SHIVLEY — 109010 — LICENSED PROFESSIONAL ENGINEER

ME Engineers, Inc.
F-10231
08/19/2020

ELECTRICAL SCHEDULES

BID ISSUE

20513
08/19/2020
E006

C:\Revit Projects\2019\LPD_CENTRAL_E19_Derek.White97PLE.rvt
8/17/2020 9:48:33 AM

© 2020 Brinkley Sargent Wiginton Architects, Inc.

<LONGVIEW POLICE> — PANEL: S3-L3B

LONGVIEW POLICE DEPARTMENT	M-E Engineers Inc.	PANEL:	S3-L3B
480/277 Wye	BUS: 400 A TIN PLATED COPPER	ENCLOSURE:	Type 1
3 Phase, 4 Wire + Gnd. 60Hz.	MAINS: MLO	MOUTING:	Surface
SCCR: REFER TO ONE-LINE kA	GROUD BAR: Copper	FED FROM:	S3-L2B
NOTES:	OPTIONS: Subfeed Lugs: No	LEVEL:	Level 3
		LOCATION:	ELECTRICAL CLOSET 3115
	"SPD"	ISSUE DATE:	08/19/2020
		REFER TO DETAILS AND SPECIFICATION SECTION FOR PANELBOARD LAMINATED PLAQUE REQUIREMENTS.	

N	DESCRIPTION	P	BRK	CKT	A (V-A)		B (V-A)		C (V-A)		CKT	BRK	P	DESCRIPTION	N
	DETECTIVES, NARC STRG, TASK...	1	20	1	800	1994					2	20	1	VAV 3-02	
	LEVEL 3 IDF/ELEC RM	1	20	3			66	5014			4	30	1	VAV 3-03	
	LEVEL 3 RR, INTERROGATION LTG	1	20	5					776	1995	6	20	3	VAV 3-05	
	SOFT INTERVIEW, VICTIM ASSIST...	1	20	7	378	1995					8	--	--	--	--
	DETECTIVES OPEN OFFICE LTG	1	20	9			473	1995			10	--	--	--	--
	LEVEL 3 AREA A CORRIDOR LTG	1	20	11					786	5014	12	30	1	VAV 3-06	
	LEVEL 3 AREA B CORRIDOR LTG	1	20	13	544	1994					14	20	1	VAV 3-07	
	LOBBY PENDANT LIGHTING	1	20	15			540	998			16	20	3	VAV 3-08	
	BUILDING SIGNAGE BACKLIGHT	1	20	17					117	998	18	--	--	--	--
	REPORT WRITING PENDANT LTG	1	20	19	432	998					20	--	--	--	--
	MECH ROOF LTG	1	20	21			560	2992			22	20	1	VAV 3-10	
	VAV 3-28	1	20	23					2992	6011	24	30	1	VAV 3-11	
	VAV 3-27	1	20	25	997	1994					26	20	1	VAV 3-12	
	Spare	1	20	27			0	5014			28	30	1	VAV 3-14	
	Spare	1	20	29					0	4323	30	20	3	VAV 3-15	
	Spare	1	20	31	0	4323					32	--	--	--	--
	Spare	1	20	33			0	4323			34	--	--	--	--
	Spare	1	20	35					0	2992	36	20	1	VAV 3-18	
	Spare	1	20	37	0	0					38	--	--	Space	--
	Spare	1	20	39			0	0			40	--	--	Space	--
	Spare	1	20	41					0	0	42	--	--	Space	--
	Spare	1	20	43	0	0					44	--	--	Space	--
	Spare	1	20	45			0	0			46	--	--	Space	--
	Spare	1	20	47					0	0	48	--	--	Space	--
	TS3-R3B	3	125	49	23542	0					50	--	--	Space	--
--	--	--	--	51			24167	0			52	--	--	Space	--
--	--	--	--	53					21757	0	54	--	--	Space	--

CONNECTED (DOWNSTREAM LOADS INCLUDED)

PHASE	A	B	C	TOTALS
V-A	39887	45490	47688	133065
AMPS	144	167	175	160

DOWNSTREAM LOADS

LOAD SUMMARY WITH DOWNSTREAM LOADS INCLUDED

CATEGORY	CONNECTED	FACTOR	CALC. V-A	AMPS @ 480/277 Wye
LIGHTING	4855	125%	6069	7
RECEPTACLE	34090	64.67%	22045	27
MOTOR				
MISCELLANEOUS	35032	100.00%	35032	42
KITCHEN	400	100.00%	400	0
ELECTRIC HEAT	58957	100.00%	58957	71
TOTAL	133065 VA		122302 VA	147 A

CONDUCTOR COLORS (EC TO LABEL IN PANEL)

	208Y/120	480Y/277
A	BLACK	BROWN
B	RED	ORANGE
C	BLUE	YELLOW
N	WHITE	WHITE/GRAY STRIPE
G	GREEN	GREEN

<LONGVIEW POLICE> — PANEL: S3-R3B

LONGVIEW POLICE DEPARTMENT	M-E Engineers Inc.	PANEL:	S3-R3B
120/208 Wye	BUS: 250 A TIN PLATED COPPER	ENCLOSURE:	Type 1
3 Phase, 4 Wire + Gnd. 60Hz.	MAINS: 250 A - MCB	MOUTING:	Surface
SCCR: REFER TO ONE-LINE kA	GROUD BAR: Copper	FED FROM:	TS3-R3B
NOTES: G - PROVIDE GFCI PROTECTED BREAKER	OPTIONS: Subfeed Lugs: No	LEVEL:	Level 3
		LOCATION:	ELECTRICAL CLOSET 3115
	"SPD"	ISSUE DATE:	08/19/2020
		REFER TO DETAILS AND SPECIFICATION SECTION FOR PANELBOARD LAMINATED PLAQUE REQUIREMENTS.	

N	DESCRIPTION	P	BRK	CKT	A (V-A)		B (V-A)		C (V-A)		CKT	BRK	P	DESCRIPTION	N
	ADMIN ASSIST - RCPTS	1	20	1	1080	800					2	20	1	TASK FORCE OFFICERS FEED	
	CONF/INTERVIEW 3032 - RCPTS	1	20	3			1280	800			4	20	1	TASK FORCE OFFICERS FEED	
	COFFEE 3004 - MICROWAVE	1	20	5					900	800	6	20	1	TASK FORCE OFFICERS FEED	
	COFFEE 3004 - COFFEE MACHINE	1	20	7	1600	800					8	20	1	TASK FORCE OFFICERS FEED	
	COFFEE 3004 - RCPTS	1	20	9			720	1080			10	20	1	TECH INVESTIGATORS RCPTS	
G	COFFEE 3004 - FRIDGE	1	20	11					900	1080	12	20	1	TECH INVESTIGATORS RCPTS	
	WORK/COPY 3014 - SHREDDER	1	20	13	1600	480					14	20	1	CORRIDOR 3126 - UC FRIDGE	G
	WORK/COPY 3014 - PRINTER	1	20	15			1600	1600			16	20	1	CORRIDOR 3126 - COFFEE MACHINE	
	WORK/COPY 3014 - COPIER	1	20	17					1800	0	18	20	1	Spare	
	I.A. FILES - RCPTS	1	20	19	1080	480					20	20	1	CORRIDOR 3126 - UC FRIDGE	G
	CORRIDOR 3022 - RCPTS	1	20	21			180	400			22	20	1	CORRIDOR 3126 - ICE	
	RECEPTION 3102 - RCPTS	1	20	23					720	180	24	20	1	CORRIDOR 3126 - RCPT	
	CORRIDOR 3101 - RCPTS	1	20	25	900	540					26	20	1	EVIDENCE STORAGE 3133 - RCPT	
	STAIR 2 RCPT	1	20	27			540	180			28	20	1	LVL 3 - EWC	G
	MENS/WOMENS RR VALVE PWR	1	20	29					700	1260	30	20	1	PUBLIC WAITING 3207 - RCPTS	
	CU 1-01	2	20	31	1581	1260					32	20	1	CORRIDOR 3201 RCPTS	
--	--	--	--	33			1581	720			34	20	1	VICTIM ASSIST 3204 RCPTS	
	CU 1-08	2	20	35					1581	920	36	20	1	INTERVIEW 3203 - RCPTS	
--	--	--	--	37	1581	1581					38	20	2	CU 3-01	
	CU 2-01	2	20	39			1581	1581			40	--	--	--	--
--	--	--	--	41					1581	1581	42	20	2	CU 3-03	
	RR VALVE PWR	1	20	43	400	1581					44	--	--	--	--
	3RD LEVEL ROOF RCPTS	1	20	45			540	1581			46	20	2	CU 4-01	
	Spare	1	20	47					0	1581	48	--	--	--	--
	Spare	1	20	49	0	1080					50	20	1	ROOF RCPTS	
	Spare	1	20	51			0	1260			52	20	1	ROOF RCPTS	
	Spare	1	20	53					0	540	54	20	1	STAIR ST-03 RCPT	
	Spare	1	20	55	0	0					56	20	1	Spare	
	Spare	1	20	57			0	0			58	20	1	Spare	
	Spare	1	20	59					0	0	60	20	1	Spare	
	Spare	1	20	61	0	0					62	20	1	Spare	
	Spare	1	20	63			0	0			64	20	1	Spare	
	Spare	1	20	65					0	0	66	20	1	Spare	
	Spare	1	20	67	0	0					68	20	1	Spare	
	Spare	1	20	69			0	0			70	20	1	Spare	
	Spare	1	20	71					0	0	72	20	1	Spare	

CONNECTED (DOWNSTREAM LOADS INCLUDED)

PHASE	A	B	C	TOTALS
V-A	23542	24167	21757	69451
AMPS	198	204	181	193

DOWNSTREAM LOADS

S3-R3B2

LOAD SUMMARY WITH DOWNSTREAM LOADS INCLUDED

CATEGORY	CONNECTED	FACTOR	CALC. V-A	AMPS @ 120/208 Wye
LIGHTING				
RECEPTACLE	34090	64.67%	22045	61
MOTOR				
MISCELLANEOUS	35032	100.00%	35032	97
KITCHEN	400	100.00%	400	1
ELECTRIC HEAT				
TOTAL	69451 VA		57461 VA	159 A

CONDUCTOR COLORS (EC TO LABEL IN PANEL)

	208Y/120	480Y/277
A	BLACK	BROWN
B	RED	ORANGE
C	BLUE	YELLOW
N	WHITE	WHITE/GRAY STRIPE
G	GREEN	GREEN

<LONGVIEW POLICE> — PANEL: S2-L3B

LONGVIEW POLICE DEPARTMENT	M-E Engineers Inc.	PANEL:	S2-L3B
480/277 Wye	BUS: 400 A TIN PLATED COPPER	ENCLOSURE:	Type 1
3 Phase, 4 Wire + Gnd. 60Hz.	MAINS: MLO	MOUTING:	Surface
SCCR: REFER TO ONE-LINE kA	GROUD BAR: Copper	FED FROM:	S2-L2B
NOTES:	OPTIONS: Subfeed Lugs: No	LEVEL:	Level 3
		LOCATION:	ELECTRICAL CLOSET 3115
	"SPD"	ISSUE DATE:	08/19/2020
		REFER TO DETAILS AND SPECIFICATION SECTION FOR PANELBOARD LAMINATED PLAQUE REQUIREMENTS.	

N	DESCRIPTION	P	BRK	CKT	A (V-A)		B (V-A)		C (V-A)		CKT	BRK	P	DESCRIPTION	N
	POLICE CHIEF OFFICE LTG	1	20	1	474	2328					2	20	3	VAV 3-04	
	CAPTAIN, LTENANT OFFICE LTG	1	20	3			744	2328			4	--	--	--	--
	SERGEANT/LTNT 3155 LTG	1	20	5					304	2328	6	--	--	--	--
	EF 4-01	3	20	7	942	2328					8	20	3	VAV 3-13	
--	--	--	--	9			942	2328			10	--	--	--	--
--	--	--	--	11					942	2328	12	--	--	--	--
	VAV 3-24	3	20	13	3658	5014					14	30	1	VAV 3-17	
--	--	--	--	15			3658	2992			16	20	1	VAV 3-19	
--	--	--	--	17					3658	2328	18	20	3	VAV 3-20	
	VAV 3-25	1	20	19	2992	2328					20	--	--	--	--
	VAV 3-26	1	30	21			5014	2328			22	--	--	--	--
	Spare	1	20	23					0	1994	24	20	1	VAV 3-22	
	Spare	1	20	25	0	5014					26	30	1	VAV 3-23	
	Spare	1	20	27			0	0			28	--	--	Space	--
	Spare	1	20	29					0	0	30	--	--	Space	--
	Spare	1	20	31	0	0					32	--	--	Space	--
	Spare	1	20	33			0	0			34	--	--	Space	--
	Spare	1	20	35					0	0	36	--	--	Space	--
	TS2-R3B	3	50	37	6940	0					38	--	--	Space	--
--	--	--	--	39			7260	0			40	--	--	Space	--
--	--	--	--	41					4300	0	42	--	--	Space	--

CONNECTED (DOWNSTREAM LOADS INCLUDED)

PHASE	A	B	C	TOTALS
V-A	32018	27594	18182	77795
AMPS	121	105	66	94

DOWNSTREAM LOADS

S2-R3B

LOAD SUMMARY WITH DOWNSTREAM LOADS INCLUDED

CATEGORY	CONNECTED	FACTOR	CALC. V-A	AMPS @ 480/277 Wye
LIGHTING	1522	125%	1903	2
RECEPTACLE	15300	82.68%	12650	15
MOTOR				
MISCELLANEOUS	6027	100.00%	6027	7
KITCHEN				
ELECTRIC HEAT	54946	100.00%	54946	66
TOTAL	77795 VA		75526 VA	91 A

CONDUCTOR COLORS (EC TO LABEL IN PANEL)

	208Y/120	480Y/277
A	BLACK	BROWN
B	RED	ORANGE
C	BLUE	YELLOW
N	WHITE	WHITE/GRAY STRIPE
G	GREEN	GREEN

<LONGVIEW POLICE> — PANEL: S2-R3B

LONGVIEW POLICE DEPARTMENT	M-E Engineers Inc.	PANEL:	S2-R3B
120/208 Wye	BUS: 100 A TIN PLATED COPPER	ENCLOSURE:	Type 1
3 Phase, 4 Wire + Gnd. 60Hz.	MAINS: 100 A - MCB	MOUTING:	Surface
SCCR: REFER TO ONE-LINE kA	GROUD BAR: Copper	FED FROM:	TS2-R3B
NOTES:	OPTIONS: Subfeed Lugs: No	LEVEL:	Level 3
		LOCATION:	ELECTRICAL CLOSET 3115
	"SPD"	ISSUE DATE:	08/19/2020
		REFER TO DETAILS AND SPECIFICATION SECTION FOR PANELBOARD LAMINATED PLAQUE REQUIREMENTS.	

N	DESCRIPTION	P	BRK	CKT	A (V-A)		B (V-A)		C (V-A)		CKT	BRK	P	DESCRIPTION	N
	CAPTAIN 3027 - FLRBOX	1	20	1	360	920					2	20	1	LIEUTENANT 3155 - RCPTS	
	CAPTAIN 3027 - RCPTS	1	20	3			900	1440			4	20	1	SERGEANT 3146 - RCPTS	
	CAPTAIN 3027 - TVS	1	20	5					600	600	6	20	1	SERGEANT 3146 - TVS	
	SUPPORT SERVICES LT. 3026 -...	1	20	7	900	720					8	20	1	SERGEANT 3144 - RCPTS	
	CAPTAIN 3025 - RCPTS	1	20	9			900	360			10	20	1	MENS/WOMENS RR RCPTS	
	CAPTAIN 3025 - FLRBOX	1	20	11					1080	200	12	20	1	MENS/WOMENS RR VALVE PWR	
	CAPTAIN 3024 - RCPTS	1	20	13	1100	1100					14	20	1	ASSISTANT CHIEF 3013 - RCPTS	
	ASSIST. CHIEF 3023 - RCPTS	1	20	15			1100	720			16	20	1	ASSISTANT CHIEF 3013 - FLRBOX	
	I.A. LIEUTENANT 3029 - RCPTS	1	20	17					720	1100	18	20	1	POLICE CHIEF 3012 - RCPTS	
	I.A. LIEUTENANT 3029 - TVS	1	20	19	400	1440					20	20	1	OFFICE MANAGER 3005 - RCPTS	
	I.A. LIEUTENANT 3028 - RCPTS	1	20	21			1440	400			22	20	1	OFFICE MANAGER 3005 - TVS	
	Spare	1	20	23					0	0	24	20	1	Spare	
	Spare	1	20	25	0	0					26	20	1	Spare	
	Spare	1	20	27			0	0			28	20	1	Spare	
	Spare	1	20	29					0	0	30	20	1	Spare	
	Spare	1	20	31	0	0					32	20	1	Spare	
	Spare	1	20	33			0	0			34	20	1	Spare	
	Spare	1	20	35					0	0	36	20	1	Spare	
	Spare	1	20	37	0	0					38	20	1	Spare	
	Spare	1	20	39			0	0			40	20	1	Spare	
	Spare	1	20	41					0	0	42	20	1	Spare	

CONNECTED (DOWNSTREAM LOADS INCLUDED)

PHASE	A	B	C	TOTALS
V-A	6940	7260	4300	18500
AMPS	61	64	36	51

DOWNSTREAM LOADS

LOAD SUMMARY WITH DOWNSTREAM LOADS INCLUDED

CATEGORY	CONNECTED	FACTOR	CALC. V-A	AMPS @ 120/208 Wye
LIGHTING				
RECEPTACLE	15300	82.68%	12650	35
MOTOR				
MISCELLANEOUS	3200	100.00%	3200	9
KITCHEN				
ELECTRIC HEAT				
TOTAL	18500 VA		15850 VA	44 A

CONDUCTOR COLORS (EC TO LABEL IN PANEL)

	208Y/120	480Y/277
A	BLACK	BROWN
B	RED	ORANGE
C	BLUE	YELLOW
N	WHITE	WHITE/GRAY STRIPE
G	GREEN	GREEN

<LONGVIEW POLICE> — PANEL: S3-R3B2

LONGVIEW POLICE DEPARTMENT	M-E Engineers Inc.	PANEL:	S3-R3B2
120/208 Wye	BUS: 250 A TIN PLATED COPPER	ENCLOSURE:	Type 1
3 Phase, 4 Wire + Gnd. 60Hz.	MAINS: MLO	MOUTING:	Surface
SCCR: REFER TO ONE-LINE kA	GROUD BAR: Copper	FED FROM:	S3-R3B
NOTES:	OPTIONS: Subfeed Lugs: No	LEVEL:	Level 3
		LOCATION:	ELECTRICAL CLOSET 3115
	"SPD"	ISSUE DATE:	08/19/2020
		REFER TO DETAILS AND SPECIFICATION SECTION FOR PANELBOARD LAMINATED PLAQUE REQUIREMENTS.	

N	DESCRIPTION	P	BRK	CKT	A (V-A)		B (V-A)		C (V-A)		CKT	BRK	P	DESCRIPTION	N
	DETECTIVES 3125 FEED	1	20	1	800	800					2	20	1	DETECTIVES 3119 FEED	
	DETECTIVES 3125 FEED	1	20	3			800	800			4	20	1	DETECTIVES 3119 FEED	
	DETECTIVES 3125 FEED	1	20	5					800	800	6	20	1	DETECTIVES 3119 FEED	
	DETECTIVES 3125 FEED	1	20	7	800	800					8	20	1	DETECTIVES 3119 FEED	
	DETECTIVES 3127 - RCPTS	1	20	9			1080	360			10	20	1	DETECTIVES 3127 - RCPTS	
	DETECTIVES 3127 - RCPTS	1	20	11					1260	1080	12	20	1	DETECTIVES 3127 - RCPTS	
	NARCOTICS STORAGE 3129 - RCPT	1	20	13	720	900					14	20	1	CORRIDOR 3123 - RCPTS	
	COPY/WORK/COFFEE 3131 - RCPTS	1	20	15			360	1000			16	20	1	COPY/WORK/COFFEE 3131 -...	
	COPY/WORK/COFFEE 3131 -...	1	20	17					1000	1000	18	20	1	COPY/WORK/COFFEE 3131 -...	
	CORRIDOR 3126 - RCPTS	1	20	19	900	580					20	20	1	CORRIDOR 3151 - TVS	
	CORRIDOR 3151 - FLRBOX	1	20	21			360	920			22	20	1	INTERVIEW 3202 RCPTS	
	CORRIDOR 3114 - RCPTS	1	20	23					1440	0	24	20	1	Spare	
	Spare	1	20	25	0	0					26	20	1	Spare	
	Spare	1	20	27			0	0			28	20	1	Spare	
	Spare	1	20	29					0	0	30	20	1	Spare	
	Spare	1	20	31	0	0					32	20	1	Spare	
	Spare	1	20	33			0	0			34	20	1	Spare	
	Spare	1	20	35					0	0	36	20	1	Spare	
	Spare	1	20	37	0	0					38	20	1	Spare	
	Spare	1	20	39			0	0			40	20	1	Spare	
	Spare	1	20	41					0	0	42	20	1	Spare	
	Spare	1	20	43	0	0					44	20	1	Spare	
	Spare	1	20	45			0	0			46	20	1	Spare	
	Spare	1	20	47					0	0	48	20	1	Spare	
	Spare	1	20	49	0	0					50	20	1	Spare	
	Spare	1	20	51			0	0			52	20	1	Spare	
	Spare	1	20	53					0	0	54	20	1	Spare	

CONNECTED (DOWNSTREAM LOADS INCLUDED)

PHASE	A	B	C	TOTALS
V-A	5977	5445	7125	18483
AMPS	50	45	60	51

DOWNSTREAM LOADS

LOAD SUMMARY WITH DOWNSTREAM LOADS INCLUDED

CATEGORY	CONNECTED	FACTOR	CALC. V-A	AMPS @ 120/208 Wye
LIGHTING				
RECEPTACLE	14981	83.38%	12490	35
MOTOR				
MISCELLANEOUS	3600	100.00%	3600	10
KITCHEN				
ELECTRIC HEAT				
TOTAL	18483 VA		15997 VA	44 A

CONDUCTOR COLORS (EC TO LABEL IN PANEL)

	208Y/120	480Y/277
A	BLACK	BROWN
B	RED	ORANGE
C	BLUE	YELLOW
N	WHITE	WHITE/GRAY STRIPE
G	GREEN	GREEN

<LONGVIEW POLICE> — PANEL: S1-L3B

LONGVIEW POLICE DEPARTMENT	M-E Engineers Inc.	PANEL:	S1-L3B
480/277 Wye	BUS: 600 A TIN PLATED COPPER	ENCLOSURE:	Type 1
3 Phase, 4 Wire + Gnd. 60Hz.	MAINS: MLO	MOUTING:	Surface
SCCR: REFER TO ONE-LINE kA	GROUD BAR: Copper	FED FROM:	S1-D1A
NOTES:	OPTIONS: Subfeed Lugs: No	LEVEL:	Level 3
		LOCATION:	ELECTRICAL CLOSET 3115
	"SPD"	ISSUE DATE:	08/19/2020
		REFER TO DETAILS AND SPECIFICATION SECTION FOR PANELBOARD LAMINATED PLAQUE REQUIREMENTS.	

N	DESCRIPTION	P	BRK	CKT	A (V-A)		B (V-A)		C (V-A)		CKT	BRK	P	DESCRIPTION	N
	P.I.O./SOCIAL MEDIA 3107 - LTG	1	20	1	251	5014					2	30	1	VAV 3-01	
	EVIDENCE/STRATEGY CONF - LTG	1	20	3			480	8005			4	40	1	VAV 3-09	
	CONFERENCE 3008 LTG	1	20	5					401	1994	6	20	1	VAV 3-16	
	TECH INVEST. LAB LTG	1	20	7	387	2660					8	20	3	VAV 3-21	
	EDH 3-02	3	150	9			31870	2660			10	--	--	--	--
--	--	--	--	11					31870	2660	12	--	--	--	--
--	--	--	--	13	31870	776					14	20	3	CCU 1-01	
	EDH 3-01	3	150	15			31870	776			16	--	--	--	--
--	--	--	--	17					31870	776	18	--	--	--	--
--	--	--	--	19	31870	776					20	20	3	CCU 1-02	
	CCU 1-03	3	20	21			776	776			22	--	--	--	--
--	--	--	--	23					776	776	24	--	--	--	--
--	--	--	--	25	776	0					26	--	--	Space	--
	Spare	1	20	27			0	0			28	--	--	Space	--
	Spare	1	20	29					0	0	30	--	--	Space	--
	Spare	1	20	31	0	0					32	--	--	Space	--
	Spare	1	20	33			0	0			34	--	--	Space	--
	Spare	1	20	35					0	0	36	--	--	Space	--
	Spare	1	20	37	0	0					38	--	--	Space	--
	Spare	1	20	39			0	0			40	--	--	Space	--
	Spare	1	20	41					0	0	42	--	--	Space	--

CONNECTED (DOWNSTREAM LOADS INCLUDED)

PHASE	A	B	C	TOTALS
V-A	74379	77213	71123	222715
AMPS	270	281	257	268

DOWNSTREAM LOADS

LOAD SUMMARY WITH DOWNSTREAM LOADS INCLUDED

CATEGORY	CONNECTED	FACTOR	CALC. V-A	AMPS @ 480/277 Wye
LIGHTING	1519	125%	1898	2
RECEPTACLE				
MOTOR				
MISCELLANEOUS	6984	100.00%	6984	8
KITCHEN				
ELECTRIC HEAT	214212	100.00%	214212	258
TOTAL	222715 VA		223094 VA	268 A

CONDUCTOR COLORS (EC TO LABEL IN PANEL)

	208Y/120	480Y/277
A	BLACK	BROWN
B	RED	ORANGE
C	BLUE	YELLOW
N	WHITE	WHITE/GRAY STRIPE
G	GREEN	GREEN

<LONGVIEW POLICE> — PANEL: S1-R3B

LONGVIEW POLICE DEPARTMENT	M-E Engineers Inc.	PANEL:	S1-R3B
120/208 Wye	BUS: 125 A TIN PLATED COPPER	ENCLOSURE:	Type 1
3 Phase, 4 Wire + Gnd. 60Hz.	MAINS: MLO	MOUTING:	Surface
SCCR: REFER TO ONE-LINE kA	GROUD BAR: Copper	FED FROM:	S1-R2B
NOTES:	OPTIONS: Subfeed Lugs: No	LEVEL:	Level 3
		LOCATION:	ELECTRICAL CLOSET 3115
	"SPD"	ISSUE DATE:	08/19/2020
		REFER TO DETAILS AND SPECIFICATION SECTION FOR PANELBOARD LAMINATED PLAQUE REQUIREMENTS.	

N	DESCRIPTION	P	BRK	CKT	A (V-A)		B (V-A)		C (V-A)		CKT	BRK	P	DESCRIPTION	N
	P.I.O./SOCIAL MEDIA 3107 - RCPTS	1	20	1	1080	1000					2	20	1	MOTORIZED SHADES	
	P.I.O./SOCIAL MEDIA 3107 - RCPTS	1	20	3			720	1000			4	20	1	MOTORIZED SHADES	
	EVIDENCE/STRATEGY CONF -...	1	20	5					720	1581	6	30	2	CU 1-02	
	EVIDENCE/STRATEGY CONF -...	1	20	7	1080	1581					8	--	--	--	--
	EVIDENCE/STRATEGY CONF -...	1	20	9			1440	1581			10	30	2	CU 2-02	
	EVIDENCE/STRATEGY CONF - TV	1	20	11					580	1581	12	--	--	--	--
	EVIDENCE/STRATEGY CONF -...	1	20	13	1000	1581					14	30	2	CU 3-02	
	TECH INVESTIGATORS TRACK LTG	1	20	15			80	1581			16	--	--	--	--
	STAFF ELEVATOR SHAFT PWR	1	20	17					180	1040	18	20	2	CU 3-05	
	ELEVATOR EQUIP RM RCPT	1	20	19	180	1040					20	--	--	--	--
	ELEC CLOSET 3115 RCPT	1	20	21			180	1040			22	20	2	CU 4-02	
	ELEVATOR CAB PWR	1	20	23					500	1040	24	--	--	--	--
	ELEVATOR SHAFT PWR	1	20	25	180	2080					26	30	2	CU 2-03	
	Spare	1	20	27			0	2080			28	--	--	--	--
	Spare	1	20	29					0	1040	30	20	2	CU 3-04	
	Spare	1	20	31	0	1040					32	--	--	--	--
	Spare	1	20	33			0	0			34	20	1	Spare	
	Spare	1	20	35					0	0	36	20	1	Spare	
	Spare	1	20	37	0	0					38	20	1	Spare	
	Spare	1	20	39			0	0			40	20	1	Spare	
	Spare	1	20	41					0	0	42	20	1	Spare	

CONNECTED (DOWNSTREAM LOADS INCLUDED)

PHASE	A	B	C	TOTALS
V-A	11842	9702	8262	29806
AMPS	101	83	69	83

DOWNSTREAM LOADS

LOAD SUMMARY WITH DOWNSTREAM LOADS INCLUDED

CATEGORY	CONNECTED	FACTOR	CALC. V-A	AMPS @ 120/208 Wye
LIGHTING	80	125%	100	0
RECEPTACLE	5940	100.00%	5940	16
MOTOR	3000	108.33%	3250	9
MISCELLANEOUS	20286	100.00%	20286	56
KITCHEN				
ELECTRIC HEAT				
TOTAL	29806 VA		30076 VA	83 A

CONDUCTOR COLORS (EC TO LABEL IN PANEL)

	208Y/120	480Y/277
A	BLACK	BROWN
B	RED	ORANGE
C	BLUE	YELLOW
N	WHITE	WHITE/GRAY STRIPE
G	GREEN	GREEN

<LONGVIEW POLICE> — PANEL: E-L3B

LONGVIEW POLICE DEPARTMENT	M-E Engineers Inc.	PANEL:	E-L3B
480/277 Wye	BUS: 250 A TIN PLATED COPPER	ENCLOSURE:	Type 1
3 Phase, 4 Wire + Gnd. 60Hz.	MAINS: MLO	MOUTING:	Surface
SCCR: REFER TO ONE-LINE kA	GROUD BAR: Copper	FED FROM:	E-L1B
NOTES:	OPTIONS: Subfeed Lugs: No	LEVEL:	Level 3
		LOCATION:	ELECTRICAL CLOSET 3115
	"SPD"	ISSUE DATE:	08/19/2020
		REFER TO DETAILS AND SPECIFICATION SECTION FOR PANELBOARD LAMINATED PLAQUE REQUIREMENTS.	

N	DESCRIPTION	P	BRK	CKT	A (V-A)		B (V-A)		C (V-A)		CKT	BRK	P	DESCRIPTION	N
	LVL 3 CORRIDOR EM LTG	1	20	1	700	901					2	20	1	LEVEL 2 CORRIDOR LTG	
	RR/DET. OPEN OFFICE EM LTG	1	20	3			889	35			4	20	1	THIRD LEVEL EXIT SIGNS	
	LEVEL 2 - CORRIDOR LTG	1	20	5					701	35	6	20	1	THIRD LEVEL EXIT SIGNS	
	Spare	1	20	7	0	0					8	20	1	Spare	
	Spare	1	20	9			0	0			10	20	1	Spare	
	Spare	1	20	11					0	0	12	20	1	Spare	
	Spare	1	20	13	0	0					14	20	1	Spare	
	Spare	1	20	15			0	0			16	20	1	Spare	
	Spare	1	20	17					0	0	18	20	1	Spare	
	Spare	1	20	19	0	0					20	20	1	Spare	
	Spare	1	20	21			0	0			22	20	1	Spare	
	Spare	1	20	23					0	0	24	20	1	Spare	
	Spare	1	20	25	0	0					26	20	1	Spare	
	Spare	1	20	27			0	0			28	20	1	Spare	
	Spare	1	20	29					0	0	30	20	1	Spare	

CONNECTED (DOWNSTREAM LOADS INCLUDED)

PHASE	A	B	C	TOTALS
V-A	1597	924	736	3255
AMPS	6	3	3	4

DOWNSTREAM LOADS

LOAD SUMMARY WITH DOWNSTREAM LOADS INCLUDED

CATEGORY	CONNECTED	FACTOR	CALC. V-A	AMPS @ 480/277 Wye
LIGHTING	3255	125%	4068	5
RECEPTACLE				
MOTOR				
MISCELLANEOUS				
KITCHEN				
ELECTRIC HEAT				
TOTAL	3255 VA		4068 VA	5 A

CONDUCTOR COLORS (EC TO LABEL IN PANEL)

	208Y/120	480Y/277
A	BLACK	BROWN
B	RED	ORANGE
C	BLUE	YELLOW
N	WHITE	WHITE/GRAY STRIPE
G	GREEN	GREEN

S3-L3B	S2-L3B	S1-L3B
S3-R3B	S2-R3B	S1-R3B
	S3-R3B2	E-L3B

BRINKLEY SARGENT WIGINTON ARCHITECTS

Architect: Brinkley Sargent Wiginton Architects (972) 960-9970
Landscape: Kendall Landscape Architecture (214) 739-3226
Structural: L.A. Fuess Partners, Inc (214) 593-1118
MEP: M-E Engineers (214) 741-1589
Civil: KSA Engineers, Inc (903) 236-7700
Technology: M-E Engineers (303) 421-6656

LONGVIEW POLICE DEPARTMENT

518 W. SOUTH ST. LONGVIEW, TEXAS 75601

History

#	Date	Description

STATE OF TEXAS — ANDREW SHIVLEY — 109010 — LICENSED PROFESSIONAL ENGINEER

ME Engineers, Inc.
F-10231
08/19/2020

ELECTRICAL SCHEDULES

BID ISSUE

20513
08/19/2020
E007

8/17/2020 9:48:37 AM
C:\Revit Projects\2019\LPD_CENTRAL_E19_Derek.White97PLE.rvt

© 2020 Brinkley Sargent Wiginton Architects, Inc.

<LONGVIEW POLICE> LONGVIEW POLICE DEPARTMENT	M-E Engineers Inc.	PANEL:	U-T3-2
120/208 Wye 3 Phase, 4 Wire + Gnd. 60Hz. SCCR: REFER TO ONE-LINE kA	BUS: 100 A TIN PLATED COPPER MAINS: MLO GROUD BAR: Copper	ENCLOSURE: MOUTING: FED FROM:	Type 1 Surface U-T3
NOTES:	OPTIONS: Subfeed Lugs: No "SPD"	LEVEL: LOCATION: ISSUE DATE:	Level 3 FORENSICS I.T. 3136 08/19/2020
		REFER TO DETAILS AND SPECIFICATION SECTION FOR PANELBOARD LAMINATED PLAQUE REQUIREMENTS.	

N	DESCRIPTION	P	BRK	CKT	A (V-A)		B (V-A)		C (V-A)		CKT	BRK	P	DESCRIPTION	N
	FORENSICS IT - RCPTS	1	20	1	720	360					2	20	1	CYBER LAB 3135 - RCPTS	
	FORENSICS IT - RCPTS	1	20	3			720	360			4	20	1	CYBER LAB 3135 - RCPTS	
	FORENSICS IT - RACK RCPTS	1	20	5					360	360	6	20	1	CYBER LAB 3135 - RCPTS	
	FORENSICS IT - RACK RCPTS	1	20	7	360	360					8	20	1	CYBER LAB 3135 - RCPTS	
	FORENSICS IT - RACK RCPTS	2	30	9			833	360			10	20	1	CYBER LAB 3135 - RCPTS	
--	--	--	--	11					833	360	12	20	1	CYBER LAB 3135 - RCPTS	
	FORENSICS IT - RACK RCPTS	2	30	13	833	1200					14	20	1	CYBER LAB 3135 - PLUGMOLD	
--	--	--	--	15			833	720			16	20	1	CYBER LAB 3135 - RCPTS	
	FORENSICS IT - RACK RCPTS	2	30	17					833	4360	18	20	1	CYBER LAB 3135 - RCPTS	
--	--	--	--	19	833	720					20	20	1	SOLDER STATION 3137 - RCPTS	
	FORENSICS IT - RACK RCPTS	2	30	21			833	360			22	20	1	SOLDER STATION 3137 - RCPTS	
--	--	--	--	23					833	900	24	20	1	CYBER LAB 3134 - RCPTS	
	Spare	2	30	25	0	0					26	20	1	Spare	
--	--	--	--	27			0	0			28	20	1	Spare	
	Spare	2	30	29					0	0	30	20	1	Spare	
--	--	--	--	31	0	0					32	20	1	Spare	
	Spare	1	20	33			0	0			34	20	1	Spare	
	Spare	1	20	35					0	0	36	20	1	Spare	
	Spare	1	20	37	0	0					38	20	1	Spare	
	Spare	1	20	39			0	0			40	20	1	Spare	
	Spare	1	20	41					0	0	42	20	1	Spare	

CONNECTED (DOWNSTREAM LOADS INCLUDED)

PHASE	A	B	C	TOTALS
V-A	5127	4761	8570	18306
AMPS	43	40	72	51

DOWNSTREAM LOADS

LOAD SUMMARY WITH DOWNSTREAM LOADS INCLUDED

CATEGORY	CONNECTED	FACTOR	CALC. V-A	AMPS @ 120/208 Wye
LIGHTING				
RECEPTACLE	11959	91.81%	10979	30
MOTOR				
MISCELLANEOUS	6664	100.00%	6664	18
KITCHEN				
ELECTRIC HEAT				
TOTAL	18306 VA		17336 VA	48 A

CONDUCTOR COLORS (EC TO LABEL IN PANEL)

	208Y/120	480Y/277
A	BLACK	BROWN
B	RED	ORANGE
C	BLUE	YELLOW
N	WHITE	WHITE/GRAY STRIPE
G	GREEN	GREEN

<LONGVIEW POLICE> LONGVIEW POLICE DEPARTMENT	M-E Engineers Inc.	PANEL:	U-T1
120/208 Wye 3 Phase, 4 Wire + Gnd. 60Hz. SCCR: REFER TO ONE-LINE kA	BUS: 250 A TIN PLATED COPPER MAINS: 250 A - MCB GROUD BAR: Copper	ENCLOSURE: MOUTING: FED FROM:	Type 1 Surface TU-T1
NOTES:	OPTIONS: Subfeed Lugs: Yes "SPD"	LEVEL: LOCATION: ISSUE DATE:	Level 1 IT/DATA CLOSET 1309 08/19/2020
		REFER TO DETAILS AND SPECIFICATION SECTION FOR PANELBOARD LAMINATED PLAQUE REQUIREMENTS.	

N	DESCRIPTION	P	BRK	CKT	A (V-A)		B (V-A)		C (V-A)		CKT	BRK	P	DESCRIPTION	N
	IT CLOSET 1309 - RCPTS	1	20	1	360	833					2	30	2	IT CLOSET 1309 RACK RCPTS	
	IT CLOSET 1309 - RCPTS	1	20	3			720	833			4	--	--	--	--
	IT CLOSET 1309 - RCPTS	1	20	5					360	833	6	30	2	IT CLOSET 1309 RACK RCPTS	
	IT CLOSET 1309 RACK RCPTS	2	30	7	833	833					8	--	--	--	--
--	--	--	--	9			833	360			10	20	1	IT CLOSET 1309 RACK RCPTS	
	IT CLOSET 1309 RACK RCPTS	2	30	11					833	833	12	30	2	IT CLOSET 1309 RACK RCPTS	
--	--	--	--	13	833	833					14	--	--	--	--
	IT CLOSET 1309 RACK RCPTS	1	20	15			360	833			16	30	2	IT CLOSET 1309 RACK RCPTS	
	IT CLOSET 1309 RACK RCPTS	1	20	17					360	833	18	--	--	--	--
	Spare	2	30	19	0	0					20	20	1	Spare	
--	--	--	--	21			0	0			22	20	1	Spare	
	Spare	2	30	23					0	0	24	20	1	Spare	
--	--	--	--	25	0	0					26	20	1	Spare	
	Spare	2	30	27			0	0			28	20	1	Spare	
--	--	--	--	29					0	0	30	20	1	Spare	
	Spare	1	20	31	0	0					32	20	1	Spare	
	Spare	1	20	33			0	0			34	20	1	Spare	
	Spare	1	20	35					0	0	36	20	1	Spare	
	Spare	1	20	37	0	0					38	20	1	Spare	
	Spare	1	20	39			0	0			40	20	1	Spare	
	Spare	1	20	41					0	0	42	20	1	Spare	

CONNECTED (DOWNSTREAM LOADS INCLUDED)

PHASE	A	B	C	TOTALS
V-A	19990	19171	19783	58902
AMPS	167	160	166	163

DOWNSTREAM LOADS

U-T2, U-T3, U-T3-2

LOAD SUMMARY WITH DOWNSTREAM LOADS INCLUDED

CATEGORY	CONNECTED	FACTOR	CALC. V-A	AMPS @ 120/208 Wye
LIGHTING				
RECEPTACLE	22107	72.62%	16053	45
MOTOR				
MISCELLANEOUS	37863	100.00%	37863	105
KITCHEN				
ELECTRIC HEAT				
TOTAL	58902 VA		53054 VA	147 A

CONDUCTOR COLORS (EC TO LABEL IN PANEL)

	208Y/120	480Y/277
A	BLACK	BROWN
B	RED	ORANGE
C	BLUE	YELLOW
N	WHITE	WHITE/GRAY STRIPE
G	GREEN	GREEN

TAG	EQUIPMENT NAME	VOLTS	PHASE	OCPD	DISCONNECT	ELECTRICAL CONNECTION	FEEDERS	COMMENTS
EQ-01	COFFEE MAKER	120	1	20A/1P	PLUG & CORD	NEMA 5-20R	(2#12,#12G) 3/4"C.	
EQ-02	COPIER/PRINTER/SHREDDER	120	1	20A/1P	PLUG & CORD	NEMA 5-20R	(2#12,#12G) 3/4"C.	
EQ-03	REFRIGERATOR	120	1	20A/1P	PLUG & CORD	NEMA 5-20R	(2#12,#12G) 3/4"C.	PROVIDE GFCI AT BREAKER.
EQ-04	UNDER COUNTER FRIDGE	120	1	20A/1P	PLUG & CORD	NEMA 5-20R	(2#12,#12G) 3/4"C.	PROVIDE GFCI AT BREAKER.
EQ-05	VENDING MACHINE	120	1	20A/1P	PLUG & CORD	NEMA 5-20R	(2#12,#12G) 3/4"C.	PROVIDE GFCI AT BREAKER.
EQ-06	ICE MAKER	208	1	30A/2P	20A GFCI CB	J-BOX	(2#10,#10G) 3/4"C.	PROVIDE GFCI AT BREAKER.
EQ-07	INTERCOM SPEAKER MICROPHONE	120	1	20A/1P	PLUG & CORD	NEMA 5-20R	(2#12,#12G) 3/4"C.	
EQ-08	WASHER	120	1	20A/1P	PLUG & CORD	NEMA 5-20R	(2#12,#12G) 3/4"C.	PROVIDE GFCI AT BREAKER.
EQ-09	DRYER	208	1	30A/2P	PLUG & CORD	NEMA 14-30R	(2#10,#10G) 3/4"C.	PROVIDE GFCI AT BREAKER.
EQ-11	UNDER COUNTER ICE	120	1	20A/1P	PLUG & CORD	NEMA 5-20R	(2#12,#12G) 3/4"C.	PROVIDE GFCI AT BREAKER.
EQ-12	PROJECTOR	120	1	20A/1P	PLUG & CORD	NEMA 5-20R	(2#12,#12G) 3/4"C.	COORDINATE LOCATION WITH LOW VOLTAGE CONTRACTOR PRIOR TO ROUGH-IN.
EQ-13	MICROWAVE	120	1	20A/1P	PLUG & CORD	NEMA 5-20R	(2#12,#12G) 3/4"C.	
EQ-14	MOTORIZED WINDOW SHADE	120	1	20A/1P			(2#12,#12G) 3/4"C.	
EQ-15	DRYING CABINET	120	1	20A/1P	PLUG & CORD	NEMA 5-20R	(2#12,#12G) 3/4"C.	PROVIDE GFCI AT BREAKER.
EQ-16	SMALL FUMING CHAMBER	120	1	20A/1P	PLUG & CORD	NEMA 5-20R	(2#12,#12G) 3/4"C.	PROVIDE GFCI AT BREAKER.
EQ-17	LARGE FUMING CHAMBER	120	1	20A/1P	PLUG & CORD	NEMA 5-20R	(2#12,#12G) 3/4"C.	PROVIDE GFCI AT BREAKER.
EQ-18	KIOSK	120	1	20A/1P	PLUG & CORD	NEMA 5-20R	(2#12,#12G) 3/4"C.	
EQ-19	ICE/WATER DISPENSOR	120	1	20A/1P	PLUG & CORD	NEMA 5-20R	(2#12,#12G) 3/4"C.	
EQ-20	OVEN	208	1	30A/2P	PLUG & CORD	NEMA 14-30R	(2#10,#10G) 3/4"C.	PROVIDE GFCI AT BREAKER.
EQ-21	DEAL DRAWER	120	1	20A/1P	PLUG & CORD	NEMA 5-20R	(2#12,#12G) 3/4"C.	
EQ-22	FREEEZER	120	1	20A/1P	PLUG & CORD	NEMA 5-20R	(2#12,#12G) 3/4"C.	PROVIDE GFCI AT BREAKER
EQ-23	HIGH POWER DISHWASHER	208	1	50A/2P	PLUG & CORD	NEMA 6-50R	(2#6,#10G) 3/4"C.	PROVIDE GFCI AT BREAKER
EQ-24	EXAM LIGHT	120	1	20A/1P	SWITCH	J-BOX	(2#12,#12G) 3/4"C.	
EQ-25	BREAKROOM DISHWASHER	120	1	20A/1P	PLUG & CORD	NEMA 5-20R	(2#12,#12G) 3/4"C.	PROVIDE GFCI AT BREAKER

<LONGVIEW POLICE> LONGVIEW POLICE DEPARTMENT	M-E Engineers Inc.	PANEL:	U-T2
120/208 Wye 3 Phase, 4 Wire + Gnd. 60Hz. SCCR: REFER TO ONE-LINE kA	BUS: 250 A TIN PLATED COPPER MAINS: 250 A - MCB GROUD BAR: Copper	ENCLOSURE: MOUTING: FED FROM:	Type 1 Surface U-T1
NOTES:	OPTIONS: Subfeed Lugs: Yes "SPD"	LEVEL: LOCATION: ISSUE DATE:	Level 2 IT/DATA CLOSET 2125 08/19/2020
		REFER TO DETAILS AND SPECIFICATION SECTION FOR PANELBOARD LAMINATED PLAQUE REQUIREMENTS.	

N	DESCRIPTION	P	BRK	CKT	A (V-A)		B (V-A)		C (V-A)		CKT	BRK	P	DESCRIPTION	N
	IT CLOSET 2125 RCPTS	1	20	1	720	360					2	20	1	IT CLOSET 2125 RACK RCPTS	
	IT CLOSET 2125 RCPTS	1	20	3			720	833			4	30	2	IT CLOSET 2125 RACK RCPTS	
	IT CLOSET 2125 SECURTIY PNL	1	20	5					360	833	6	--	--	--	--
	IT CLOSET 2125 RACK RCPTS	1	20	7	360	833					8	30	2	IT CLOSET 2125 RACK RCPTS	
	IT CLOSET 2125 RACK RCPTS	2	30	9			833	833			10	--	--	--	--
--	--	--	--	11					833	360	12	20	1	IT CLOSET 2125 RACK RCPTS	
	IT CLOSET 2125 RACK RCPTS	2	30	13	833	833					14	30	2	IT CLOSET 2125 RACK RCPTS	
--	--	--	--	15			833	833			16	--	--	--	--
	Spare	2	30	17					0	833	18	30	2	IT CLOSET 2125 RACK RCPTS	
--	--	--	--	19	0	833					20	--	--	--	--
	Spare	2	30	21			0	0			22	20	1	Spare	
--	--	--	--	23					0	0	24	20	1	Spare	
	Spare	2	30	25	0	0					26	20	1	Spare	
--	--	--	--	27			0	0			28	20	1	Spare	
	Spare	1	20	29					0	0	30	20	1	Spare	
	Spare	1	20	31	0	0					32	20	1	Spare	
	Spare	1	20	33			0	0			34	20	1	Spare	
	Spare	1	20	35					0	0	36	20	1	Spare	
	Spare	1	20	37	0	0					38	20	1	Spare	
	Spare	1	20	39			0	0			40	20	1	Spare	
	Spare	1	20	41					0	0	42	20	1	Spare	

CONNECTED (DOWNSTREAM LOADS INCLUDED)

PHASE	A	B	C	TOTALS
V-A	15597	15365	15807	46716
AMPS	130	128	132	130

DOWNSTREAM LOADS

U-T3, U-T3-2

LOAD SUMMARY WITH DOWNSTREAM LOADS INCLUDED

CATEGORY	CONNECTED	FACTOR	CALC. V-A	AMPS @ 120/208 Wye
LIGHTING				
RECEPTACLE	19716	75.36%	14858	41
MOTOR				
MISCELLANEOUS	27871	100.00%	27871	77
KITCHEN				
ELECTRIC HEAT				
TOTAL	46716 VA		41998 VA	117 A

CONDUCTOR COLORS (EC TO LABEL IN PANEL)

	208Y/120	480Y/277
A	BLACK	BROWN
B	RED	ORANGE
C	BLUE	YELLOW
N	WHITE	WHITE/GRAY STRIPE
G	GREEN	GREEN

<LONGVIEW POLICE> LONGVIEW POLICE DEPARTMENT	M-E Engineers Inc.	PANEL:	U-T3
120/208 Wye 3 Phase, 4 Wire + Gnd. 60Hz. SCCR: REFER TO ONE-LINE kA	BUS: 250 A TIN PLATED COPPER MAINS: MLO GROUD BAR: Copper	ENCLOSURE: MOUTING: FED FROM:	Type 1 Surface U-T2
NOTES: G - GFCI PROTECTED CIRCUIT BREAKER	OPTIONS: Subfeed Lugs: Yes "SPD"	LEVEL: LOCATION: ISSUE DATE:	Level 3 IT/DATA CLOSET 3116 08/19/2020
		REFER TO DETAILS AND SPECIFICATION SECTION FOR PANELBOARD LAMINATED PLAQUE REQUIREMENTS.	

N	DESCRIPTION	P	BRK	CKT	A (V-A)		B (V-A)		C (V-A)		CKT	BRK	P	DESCRIPTION	N
	IT CLOSET 3116 RCPTS	1	20	1	720	1260					2	20	1	CONF 3008 - RCPTS	
	IT CLOSET 3116 RCPTS	1	20	3			720	800			4	20	1	CONF 3008 - TVs	
	IT CLOSET 3116 SECURITY PNL	1	20	5					360	360	6	20	1	CONF 3008 - RCPTS	
	IT CLOSET 3116 RACK RCPTS	1	20	7	360	200					8	20	1	CONF 3008 - TVs	
	IT CLOSET 3116 RACK RCPTS	2	30	9			833	500			10	20	1	CONF 3008 - UC FRIDGE	G
--	--	--	--	11					833	720	12	20	1	CONF 3008 - FLRBOX	
	IT CLOSET 3116 RACK RCPTS	2	30	13	833	360					14	20	1	IT CLOSET 3116 RACK RCPTS	
--	--	--	--	15			833	833			16	30	2	IT CLOSET 3116 RACK RCPTS	
	IT CLOSET 3116 RACK RCPTS	1	20	17					360	833	18	--	--	--	--
	IT CLOSET 3116 RACK RCPTS	2	30	19	833	833					20	30	2	IT CLOSET 3116 RACK RCPTS	
--	--	--	--	21			833	833			22	--	--	--	--
	IT CLOSET 3116 RACK RCPTS	2	30	23					833	0	24	30	2	Spare	
--	--	--	--	25	833	0					26	--	--	--	--
	Spare	1	20	27			0	0			28	30	2	Spare	
	Spare	1	20	29					0	0	30	--	--	--	--
	Spare	1	20	31	0	0					32	20	1	Spare	
	Spare	1	20	33			0	0			34	20	1	Spare	
	Spare	1	20	35					0	0	36	20	1	Spare	
	U-T3-2	3	100	37	5127	0					38	20	1	Spare	
--	--	--	--	39			4761	0			40	20	1	Spare	
--	--	--	--	41					8570	0	42	20	1	Spare	

CONNECTED (DOWNSTREAM LOADS INCLUDED)

PHASE	A	B	C	TOTALS
V-A	11023	10650	12660	34252
AMPS	92	89	106	95

DOWNSTREAM LOADS

U-T3-2

LOAD SUMMARY WITH DOWNSTREAM LOADS INCLUDED

CATEGORY	CONNECTED	FACTOR	CALC. V-A	AMPS @ 120/208 Wye
LIGHTING				
RECEPTACLE	16975	79.45%	13488	37
MOTOR				
MISCELLANEOUS	17883	100.00%	17883	50
KITCHEN				
ELECTRIC HEAT				
TOTAL	34252 VA		30835 VA	86 A

CONDUCTOR COLORS (EC TO LABEL IN PANEL)

	208Y/120	480Y/277
A	BLACK	BROWN
B	RED	ORANGE
C	BLUE	YELLOW
N	WHITE	WHITE/GRAY STRIPE
G	GREEN	GREEN

	U-T3-2	U-T1
		U-T2
		U-T3

BRINKLEY SARGENT WIGINTON ARCHITECTS

Architect: Brinkley Sargent Wiginton Architects (972) 960-9970
Landscape: Kendall Landscape Architecture (214) 739-3226
Structural: L.A. Fuess Partners, Inc (214) 593-1118
MEP: M-E Engineers (214) 741-1589
Civil: KSA Engineers, Inc (903) 236-7700
Technology: M-E Engineers (303) 421-6656

LONGVIEW POLICE DEPARTMENT

518 W. SOUTH ST. LONGVIEW, TEXAS 75601

History

#	Date	Description

STATE OF TEXAS
ANDREW SHIVLEY
109010
LICENSED
PROFESSIONAL ENGINEER
ME Engineers, Inc.
F-10231
08/19/2020

ELECTRICAL SCHEDULES

BID ISSUE

20513
08/19/2020
E008

8/17/2020 9:48:40 AM

C:\Revit Projects\2019\LPD_CENTRAL_E19_Derek.White97PLE.rvt

© 2020 Brinkley Sargent Wiginton Architects, Inc.

LED

Type	Lamp	Description	Finish	Voltage	Mounting	Manufacturer	Catalog Number	Alternate 1	Alternate 2	Control	Location	Comments
L1	33W/4' LED, 5000 DELIVERED LUMENS/4', 3500K, 80+ CRI, 50, 000+ HOURS L70	LENSED LED STRIP LIGHT, 22-GAUGE DIE-FORMED C.R.S., ROUND DIFFUSE ACRYLIC LENS, 4' OR 8' LENGTHS AS SHOWN ON PLAN, FIELD COORDINATE CHAIN HANG OR SURFACE MOUNT AS REQUIRED	STANDARD	120-277	CHAIN HUNG OR SURFACE	HE WILLIAMS	75R-X'-L50/4-8-FS-DIM-UNV	METALUX / 4SNLED-LD5-50SL-LW-UNV-L835-CDI-U/AYC-CHAIN-SET-U	LITHONIA / ZL1D-L48-5000LM-FST-MVOLT-35K-WH [HC36 IF NEEDED]	0-10V DIMMING	BOH	
L1A	20W/4' LED, 2550 DELIVERED LUMENS/4', 3500K, 80+ CRI, 50, 000+ HOURS L70	SIMILAR TO TYPE L1 WITH LOWER LUMEN OUTPUT	STANDARD	120-277	SURFACE OR PENDANT	HE WILLIAMS	75R-X'-L27/4'-8-FS-DRV-UNV	METALUX / 4SNLED-LD5-27SL-LW-UNV-L835-CDI-U/AYC-CHAIN-SET-U	LITHONIA / ZL1D L48 3000LM FST MVOLT 35K WH [HC36 IF NEEDED]	0-10V DIMMING	CRAWL SPACE	
L1-BATT	33W/4' LED, 4500 DELIVERED LUMENS/4', 3500K, 80+ CRI, 50, 000+ HOURS L70	SIMILAR TO TYPE L1 WITH 90-MINUTE EMERGENCY BATTERY PACK	STANDARD	120-277	CHAIN HUNG OR SURFACE	HE WILLIAMS	75R-X'-L45/4-8-FS-75R-X'-L45/4-8-FS-	METALUX / 4SNLED-LD5-27SL-LW-UNV-EL14W-L835-CDI-U/AYC-CHAIN-SET-U	LITHONIA / ZL1D L48 5000LM FST MVOLT 35K WH E10WLCP [HC36 IF NEEDED]	0-10V DIMMING	ELEC ROOMS	
L2	48W LED, 4900 DELIVERED LUMENS, 3500K, 80+ CRI, 50, 000+ HOURS L80	FLAT PANEL 2'X4' FOR GENERAL APPLICATIONS, 2-3/16" DEPTH, DIE-FORMED ALUMINUM HOUSING, EDGE LITE PMMA LIGHT GUIDE OPTICS, NON-GLARE MATTE WHITE POWDER COAT FINISH	MATTE WHITE	120-277	RECESSED	HE WILLIAMS	LP2-24-L50/835-DIM-UNV	METALUX / 24FP4735C	LITHONIA / CPANL 2X4 40/50/60LM 35K M2 (CI-250CSL)	0-10V DIMMING	BOH	
L3	38W LED, 4900 DELIVERED LUMENS, 3500K, 80+ CRI, 60, 000+ HOURS L80	ARCHITECTURAL DIRECT/INDIRECT 2'X4', 3-3/4" FIXTURE DEPTH, UNIFORM ILLUMINATION WITH GLARE CONTROL,	MATTE WHITE	120-277	RECESSED	DAY-O-LITE	HML-D-A-SI-35-LO-24-W-DIM10	METALUX / 24RLN-LD5-50-UNV-L835-CDI-U	MARK / WHSPR LCTR QS 2X4 4800LM 35K 80CRI MIN10 ZT MVOLT SWC	0-10V DIMMING	OFFICES	
L4	17W LED, 2000 NOMINAL LUMENS, 3500K, 80+ CRI, 50,000+ HOURS L70	4" OPEN LED DOWNLIGHT, 5-7/8" FIXTURE DEPTH, HEAVY DUTY GALVANIZED SHEET FRAME HOUSNG, INTEGRAL DRIVER ACCESSIBLE BELOW OR ABOVE CEILING.	CLEAR	120-277	RECESSED	INTENSE	SS4G4DR-L3-358-IC430-C-SF	HALO / HC420D0I0/HM412835/ 4IMDC	LITHONIA / LDN4 35/20 LO4AR LSS MVOLT GZ1	0-10V DIMMING TO 1%		
L4A		NOT USED										
L4B	12W LED, 850 DELIVERED LUMENS, 3500K, 82+ CRI, 50,000+ HOURS L70	4" LENSED DOWNLIGHT FOR SHOWER APPLICATION, 7-1/2" FIXTURE DEPTH, 40 DEGREE BEAM OPTICS, SELF FLANGED, CLEAR TEMPERED LENS	CLEAR	277	RECESSED	INTENSE	IHOL-4DR-M1-35-27-40 IRD402-C-SF-CR	HALO / HC420D010/HM412835/ 41PSMDW	GOTHAM / EVO4SH 35/10 DFF SMO MVOLT GZ10	NON-DIM	SHOWERS	
L5	9W/FT LED, 750 DELIVERED LUMENS/FT, 3500K, 80+ CRI, 80, 000+ HOURS L80	4" RECESSED LINEAR, 3.68" HOUSING DEPTH, EXTRUDED ALUMINUM HOUSING, PROVIDE CONTINUOUS LENGTHS TO 1' INCREMENT AS SHOWN ON PLAN	PER ARCH	120-277	RECESSED	DAY-O-LITE	PRFL-44-D-FL-35-HO-XX'-XX-W-DIM10	NULITE / RG4-06L35-UNV-D-1C-FRF-XX-XX	MARK / SL4L QS LOP [LENGTH] FLP [CEILING TRIM] 80CRI 35K 800LMF MIN1 [VOLTAGE] ZT	0-10V DIMMING TO 1% STANDARD		COORDINATE MOUNTING PER CEILING APPLICATION
L6	14W/FT LED, 1150 DELIVERED LUMENS/FT, 3500K, 80+ CRI, 80, 000+ HOURS L80	DECORATIVE DIRECT/INDIRECT SUSPENDED PENDANT, 22% DIRECT/78% INDIRECT DISTRIBUTION, STEEL HOUSING	PER ARCH	120-277	SUSPENDED	DAY-O-LITE	ELTL-1-XX-SI-35K-SO-XX'-ACY-FINISH PER ARCH-DIM10	CORELITE / J3-U-L-80L-8-35-I-D-UNV-STD-W-AC48-T9-XX'	FINELITE SERIES 16 LED / ID-DCO-[LENGTH]-3E-B-H-835-OPEN-[VOLTAGE]-SC-FA50"-FE-[CEILING]	0-10V DIMMING STANDARD	CONFERENCE ROOMS	COORDINATE MOUNTING PER CEILING TYPE
L7	48W/4' LED, 6400 DELIVERED LUMENS/4', 3500K, 80+ CRI, 50, 000+ HOURS L70	LED VAPOR TIGHT, PROVIDE LENGTHS AS SHOWN ON PLANS, FROSTED RIBBED, IMPACT-RESISTANT ACRYLIC LENS	STANDARD	120-277	SURFACE OR CHAIN HUNG	HE WILLIAMS	96-X'-L62/4'-835-HAIFR	METALUX / 4VT2-LF5-6-FR50-UNV-L835-CD1-WL-U	EELP / VT8-4X57L-QT-RFA-35K			
L8	7W/FT LED, 600 DELIVERED LUMENS/FT, 3500K, 80+ CRI, 50, 000 HOURS L85	SMALL PROFILE UNDER CABINET LIGHT, HARDWIRED, PROVIDE CONTINUOUS LENGTHS AS SHOWN ON PLAN, COORDINATE MOUNTING AND LENGTHS WITH MILLWORK SHOP DRAWINGS	STANDARD	120-277	SURFACE UNDER CABINET	HE WILLIAMS	1SF-X-L6-80-35-DMA-DIM-UNV	DL / DI-24V-VLX5-35-XX/DI-DM-24V100W-010V/DI-CPCHA-SL96/DI-CPCHC-PD96	LITHONIA / UCES [LENGTH] SWW4 90CRI WH M6	0-10V DIMMING		
L9	47W LED, 5500 NOMICAL LUMENS, 3500K, 80+ CRI, 50,000+ HOURS L80	VANDAL RESISTANT 2'X4', SINGLE PIECE DIE-FORMED AND WELDED, TAMPER RESISTANT TORX HEAD WITH CENTER PIN FASTENERS FOR SECURE DOOR FRAME HOUSING, OVER LAPPING DOOR FRAME, FROSTED ACRLIC INTERNAL LENS,.125 EXTERNAL LENS	STANDARD	120-277	RECESSED	CERTOLUX	VRUO2X4A/PLED835K055LUNV-P82/P45	FAIL-SAFE / SGI-G-4-LD4-2STD-35-FA-CP125-UNV-EDD1/VRSD	LITHONIA / 2VTRL F L48 7000LM ICW AP125FL MVOLT GZ1 35K 80CRI WH	0-10V DIMMING STANDARD		
L10		NOT USED										
L11	7W/FT LED, 691 DELIVERED LUMENS/FT, 3500K, 80+ CRI, 60, 000+ HOURS L70	PERIMETER COVE LIGHT, FIELD COORDINATE WALL TO WALL LENGTHS, CONTRACTOR RESPONSIBLE FOR SPECIFYING END CONDITIONS PER FIXTURE	WHITE	120-277	RECESSED	HE WILLIAMS	PX-CLG PER EC-62-LENGTH PER PLAN-L7-8-35-S-PER EC-PER EC-DIM-UNV	GAMMALUX / GPCA4N-1HOLED35-UNIV-ZTVL-XX'N-REC/XX/XX-OP-WH	MARK / SPRLED QS LOP [LENGTH] RLP [CEILING] 80CRI 35K 800LMF MIN1 MVOLT ZT	0-10V DIMMING	PUBLIC RESTROOMS	
L12		NOT USED										
L13	18W/FT LED, 1000LM/FT DIRECT, 1050LM/FT INDIRECT, 3500K, 80+ CRI,	WALL MOUNTED DIRECT/INDIRECT FIXTURE, WHITE ACRYLIC LENS, 6" DEPTH FROM WALL, MUST BE MOUNTED ABOVE ADA HEIGHT, PROVIDE 2-CIRCUIT FIXTURE FOR EMERGENCY SO DIRECT PORTION CAN BE ON EM POWER	PER ARCH	120-277	WALL	DAY-O-LITE	ADL-RO4-WRA-35-HO-XX'-WM-W-DIM10-TCW	SPI / SIW12109-L115W-120-277V-3500K-DF_-SSB-RUN-OALXX-B-AEF-PTXX	LUMIUM / O3.3 SMS [LENGTH] 35K HO HO UNV 10D SW MF 6" DUAL [OPTIONS]	0-10V DIMMING STANDARD	EGRESS STAIRS	
L14	53W LED, 5500 DELIVERED LUMENS, 4000K, 90+ CRI, 50, 000+ HOURS L80	1'X4' CLEAN RECESSED FIXTURE, 18 GAUGE COLD ROLLED STEEL DOOR, 20 GAUGE COLD ROLLED STEEL HOUSING, OVERLAPPING DOOR, TRIPLE GASKETED, IP65	STANDARD	120-277	RECESSED	CERTOLUX	CRU-O-A-1X4/P-LED-9-40K-055L-UNV	FAIL-SAFE / CLMX-12-4-OLS-A12125-LD4-2STD-40-UNV-EDD1-GSK	NEWSTAR / SC R 14 HC OC L2 40K 1C A UN DM 90C TGF	0-10V DIMMING STANDARD	LAB	
L15	3.2W LED, RED LETTER COLOR	"IN-USE" ILLUMINATED SIGNAGE, HIGH IMPACT THERMOPLASTIC HOUSING, UNIVERSAL MOUNTING FOR SIDE OR TOP INSTALLATION	WHITE	120-277	WALL	MULE LIGHTING	MX-A-1-R-W-SL3	EVENLITE / DCG-AC-1-XX-XX-RD-X	EELP / XE 2 R W 2C SWXE "IN USE"	ON/OFF	INTERVIEW ROOMS	
L16	10W, 950 DELIVERED LUMENS, 3500K, 82+ CRI, 50,000+ HOURS L70	LED TRACK HEAD, 36 DEGREE FLOOD OPTIC, FIELD CHANGEABLE OPTICS	PER ARCH	120	L16A TRACK	INTENSE	NXG2-L0-359-DIM-W-36	HALO / L815SML10FL935XX	JUNO / T261L G3 35K 90CRI PDIM SP BL	PHASE DIMMING	TECH LAB 3135	
L16A	N/A	COMPATIBLE SINGLE CIRCUIT 120V TRACK	WHITE	120	SURFACE	INTENSE	SINGLE CIRCUIT 120V TRACK	HALO / L65XP/L901P/L908P	JUNO / T TRACK		TECH LAB 3135	
L17	14W/FT LED, 1554 DELIVERED LUMENS/FT, 3500K, 80+CRI	SUSPENDED INDIRECT/DIRECT LINEAR, WELDED 20 GAUGE CRS HOUSING, LED OPTIMIZED SATIN ICE ACRYLIC, FINSISH IN BAKED WHITE ENAMEL	PER ARCH	120/277	SUSPENDED	DAY-O-LITE	PTPL-24-DI-SI/SI-35-S0-CX-AC-DIM10	LUMATO / S3-XXX'-H3-64-UNV-35-T9-W-SD-0-10V-CB48	APPROVED EQUAL	0-10V DIMMING	AFTER HOURS, DISPLAY	
L17A	7W/FT LED, 700 DELIVERED LUMENS/FT, 3500K, 80+CRI	12' NOMINAL RECESSED LINEAR, 3' 8-1/2" HOUSING DEPTH, DIE-FORMED STEEL HOUSING, LED OPTIMIZED SATIN ICE ACRYLIC REGRESSED LENS	PER ARCH	120/277	RECESSED	DAY-O-LITE	PTPL-24-D-SI-35-SO-CX-TRL-DIM10	LUMATO / R3-XXX'-H-01-UNV-35-SF-W-SD-0-10V	MARK / SL2L LOP [LENGTH] RLP [CEILING] 80CRI 35K 800LMF MIN1 [VOLTAGE] ZT	0-10V DIMMING	ENTRY VESTIBULE	CONTRACTOR TO VERIFY LENGTHS WITH CEILING
L17B	5W/FT LED, 500 DELIVERED LUMENS/FT, 3500K, 80+CRI	SIMILAR TO L17A WITH LOWER LUMEN OUTPUT, 90 DEGREE CORNER, ILLUMINATED CONNECTORS	PER ARCH	120/277	RECESSED	DAY-O-LITE	PTPL-24-D-SI-35-LO-CX-TRL-DIM10-ILC2(2)	LUMATO / R3-XXX'-M-01-UNV-35-SF-W-SD-0-10V-(2) 90 DEGREE CORNERS	MARK / SL2L LOP [LENGTH] RLP [CEILING] 80CRI 35K 600LMF MIN1 [VOLTAGE] ZT	0-10V DIMMING	ENTRY LOBBY STAIR	REFER TO FLOOR PLANS FOR DESIGN INTENT, CONTRACTOR TO VERIFY LENGTHS WITH STAIR
L18	5W/FT LED, 400 DELIVERED LUMENS/FT, 3500K, 80+CRI	RECESSED LINEAR, EXTRUDED ALUMINUM HOUSING W/STEEL END-PLATES AND TOP, LED OPTIMIZED OPAL ACRYLIC FLUSH LENS	PER ARCH	120/277	RECESSED	DAY-O-LITE	PRFL-24-D-FL-35-LO-CX-F-CC-DIM10-WTC	LUMATO / R2-XXX'-L-01-UNV-35-0F-W-SD-0-10V	MARK / SL4L LOP [LENGTH] FLP [CEILING] 80CRI 35K 400LMF MIN1 [VOLTAGE] ZT	0-10V DIMMING	RESTROOM SINKS	WALL TRANSFER CORNER PIECE FOR CORNER CONTINUOUS, ILLUMINATION, REFER TO DRAWINGS FOR DESIGN INTENT, CONTRACTOR TO VERIFY LENGTHS
L19	18W LED, 1944 DELIVERED LUMENS, 3500K, 80 CRI+	12" PENDANT, PRISMATIC REFRACTOR, DOMED FIXTURE HOUSING, MULTI-STAGE POLYSTER POWDER COAT, DIE-CAST ALUMINUM	WHITE	120/277	PENDANT	SPECTRUM	DD12GV-27L-35K-DS10X-TF1-PM-AL12/MWI-PR12-MW	BASELITE / PC12-44-LED25W-3K-ST18"-STC	PATHWAY / P47FL2X 30 35K DA P 1 W / PA12 M	0-10V DIMMING	EXERCISE	
L20	6W/FT LED, 458 DELIVERED LUMENS/FT, 3500K, 85CRI+	LED TAPE LIGHT IN RECESSED EXTRUDED ALUMINUM HOUSING, PROFILE FASTENING WINGS, FIXTURE TO REMAIN FLUSH WITH CEILING WITH ALL ALUMINUM CONCEALED	PER ARCH	120/277	RECESSED	KLUS LIGHTING	B6454-NA-GKF-35-1220/2-24-TBD-ADH-TBD-IP20	DL / DI-24V-VLX5-XX'/DI-CPCHBMUD1-96	Q-TRAN / SW/245.0-DRY-35-[CONNECTOR WIRE IN/OUT]-[LENGTH] / IQ-PH-80-120/24-[FINISH] / MDIN S ST SST DF [TYPE] [LENGTH]	0-10V DIMMING	TRAINING ROOM	CONTRACTOR TO VERIFY LENGTHS WITH CEILING AND ARCHTIECT, PROVIDE ILLUMINATED CORNERS
L21	3W/FT LED, 200 LUMENS/FT 3500K, 85CRI+	LED TAPE LIGHT FOR BACK-LIT OF EMBLEM, COORDINATE EXACT LENGTHS WITH SHOP DRAWING	PER ARCH	24V	SURFACE	KLUS LIGHTING	WP-K-35-1220-IP65-24V	DL / DI-24V-VLX2-XX'/DI-CPCHA-SL48	Q-TRAN / SW24/3.0-WET-35-[CONNECTOR WIRE IN/OUT]-[LENGTH] / IQ-PH-80-120/24-[FINISH]	REMOTE DRIVER	LOBBY	COORDINATE REMOTE DRIVER LOCATION NEARBY

DECORATIVE

Type	Lamp	Description	Finish	Voltage	Mounting	Manufacturer	Catalog Number	Alternate 1	Alternate 2	Control	Location	Comments
D1	25W LED,1334 DELIVERED LUMENS, 3000K, 80+ CRI	13"4.3"X3" VANITY LIGHT FOR PUBLIC RESTROOMS, UNINTERRUPTED LINEAR DIFFUSER, MOUNTED HORIZONTALLY CENTERED ABOVE MIRROR	PER ARCH	277	ABOVE MIRROR	TECH LIGHTING	700BCSAGW-13-S-LED930-277	EDGE / ALPHA-16-L1-30K-SN	TECH LIGHTING / 700DES12N-LED930		INDIVIDUAL RESTROOMS	
D3	5W/FT LED, 500 DELIVERED LUMENS/FT, 3500K, 84+ CRI, 80, 000+ HOURS L80	10'X10' SQUARE PENDANT WITH 4" LINEAR PROFILE, FULLY ILLUMINATED CORNERS, EXTRUDED ALUMINUM HOUSING, MUST BE CAPABLE OF LONG DISTANCES TO REMOTE DRIVER.	PER ARCH	120-277	SUSPENDED	DAY-O-LITE	PTPL-44-D-SI-35-LO-10X10-AC-W-DIM	NULITE / RP4-4D-05L35-UNV-D-1C-FRF-XX-XX-120-10'X10'SQ PATTERN	MARK / S4LDP [PLAN] [RUN LENGTH] [CONFIGURATION] 80CRI 600LMF MIN1 MVOLT [FINISH] ZT [MOUNTING] [SUSPENSION] RDCY [CANOPY COLOR] [CORD COLOR]	0-10V DIMMING	LVL 3 ATRIUM	REMOTE DRIVER TO POWER PANEL ENCLOSURE. REFER TO PLANS.
D3A	9W/FT LED, 1250 DELIVERED LUMENS/FT, 3500K, 84+ CRI, 80, 000+ HOURS L80	8'X8' SQUARE PENDANT WITH 4" LINEAR PROFILE, FULLY ILLUMINATED CORNERS, EXTRUDED ALUMINUM HOUSING, MUST BE CAPABLE OF LONG DISTANCES TO REMOTE DRIVER. CONTRACTOR TO COORDINATE WIRE GUAGES WITH MANUFACTURER IN SHOP DRAWINGS	PER ARCH	120-277	SUSPENDED	DAY-O-LITE	PTPL-44-D-SI-35-HO-8X8-AC-W-DIM	NULITE / RP4-4D-12L35-UNV-D-1C-FRF-XX-XX-120-8'X8' SQ PATTERN	MARK / S4LDP [PLAN] [RUN LENGTH] [CONFIGURATION] 80CRI 1200LMF MIN1 MVOLT [FINISH] ZT [MOUNTING] [SUSPENSION] RDCY [CANOPY COLOR] [CORD COLOR]	0-10V DIMMING	LVL 3 REPORT WRITING	REMOTE DRIVER TO POWER PANEL ENCLOSURE. REFER TO PLANS.
D5	6W/FT LED, 375 DELIVERED LUMENS/FT DIRECT, 375 DELIVERED LUMENS/FT INDIRECT, 3500K, 84+ CRI, 80,000+ HOURS L80	20'X4' RECTANGULAR PENDANT WITH 3" LINEAR PROFILE, FULLY ILLUMINATED CORNERS, EXTRUDED ALUMINUM HOUSING, MOUNTING PER CONTRACTOR	PER ARCH	120-277	SUSPENDED	DAY-O-LITE	PTPL-44-DI-SI-35-CLO-20X4-AC-W-DIM	NULITE / RP2-4B-03U03DL35-D1C-FRF-XX-XX-120-20'S4 RECT PATRN	MARK / S4LDP [PLAN] [RUN LENGTH] [CONFIGURATION] 80CRI 400LMF MIN1 MVOLT [FINISH] ZT [MOUNTING] [SUSPENSION] RDCY [CANOPY COLOR] [CORD COLOR]	0-10V DIMMING, SEPARATE DIRECT/ INDIRECT CONTROLS	WAR ROOM 3149	

SITE FAÇADE

Type	Lamp	Description	Finish	Voltage	Mounting	Manufacturer	Catalog Number	Alternate 1	Alternate 2	Control	Location	Comments
S1	70W LED, 5470 DELIVERED LUMENS, 3000K	EXTERIOR WALL PACK CYLINDER, CLEAR TEMPERED GLASS LENS, FORWARD THROW DISTRIBUTION, FULL CUT-FF	PER ARCH	120-277	WALL	HE WILLIAMS	VWP-H-L60-TFT-PER ARCH-CGL-UNV	MCGRAW-EDISON / GWC-AF-01-LED-E1-T4FT-XX	BROWNLEE / 7047 C49 30K	0-10V DIMMING STANDARD	EXTERIOR EGRESS DOORS	
S2A-T2	94W LED, 7350 DELIVERED LUMENS, 4000K, 70+ CRI, 100, 000+ HOURS L80	LED AREA LIGHT ON 20' TAPERED ROUND STEEL POLE, TYPE 2 DISTRIBUTION	PER ARCH	120-277	30' POLE ON 2.6" CONCRETE BASE	LSI	MRM-LED-18L-SIL-2-UNV-DIM-40-70CRI-ALSC	LUMARK / PRV-C60-D-UNV-T2-SA-XX-MS/DIM-L40W/RTS8A30XM1	LITHONIA / RSX2 LED P3 40K R2 MVOLT RPA NLTAIR2 [FINISH]	WIRELESS CONTROL	STAFF PARKING	
S2-T2	150W LED, 18900 DELIVERED LUMENS, 4000K, 70+ CRI, 100, 000+ HOURS L80	LED AREA LIGHT ON 30' TAPERED ROUND STEEL POLE, TYPE 2 DISTRIBUTION, PROVIDE HOUSE SIDE SHIELD	PER ARCH	120-277	30' POLE ON 2.6" CONCRETE BASE	LSI	MRM-LED-18L-SIL-2-UNV-DIM-40-70CRI-ALSC-HSS	COOPER / PRV-C60-D-UNV-T2-SA-XX-MS/DIM-L40W-RTS8A30SXM1	ALP / RTS-30-66-11-AB	WIRELESS CONTROL	PARKING PERIMETER	
S2-T3	150W LED, 19300 DELIVERED LUMENS, 4000K, 70+ CRI, 100, 000+ HOURS L80	LED AREA LIGHT ON 30' TAPERED ROUND STEEL POLE, TYPE 3 DISTRIBUTION	PER ARCH	120-277	30' POLE ON 2.6" CONCRETE BASE	LSI	MRM-LED-18L-SIL-3-UNV-DIM-40-70CRI-ALSC	LUMARK / PRV-C60-D-UNV-T3-SA-XX-MS/DIM-L40W/RTS8A30SXM1	LITHONIA / RSX2 LED P3 40K R3 MVOLT RPA NLTAIR2 [FINISH]	WIRELESS CONTRO	PARKING	
S3	27W LED, 2400 DELIVERED LUMENS, 3000K	EXTERIOR FLOOD LIGHT WITH 2 AXES OF ADJUSTABILITY, 10"X4.5", NARROW FLOOD DISTRIBUTION, WALL MOUNT INTEGRAL DRIVER CANOPY, DIE CAST ALUMINUM HOUSING, GLARE SHIELD	PER ARCH	120-277	WALL MOUNT	LUMASCAPE	LS421LED-27H6-NM-09-PER ARCH-LS6104	LIGMAN / UMI-50375-21W-VN-W30-XX-120/277V-LSL-DIM	TARGETTI / PY [TYPE] 10 FE L1 FL 30K	ON/OFF	FLAG POLES	
S4	6W LED, 512 DELIVERED LUMENS, 3000K	EXTERIOR SURFACE MOUNTED CYLINDER, 5.5" FIXTURE HEIGHT, COORDINATE REMOTE DRIVER IN WEATHER PROOF BOX, IP65 RATED	PER ARCH	24/277	SURFACE	LUMASCAPE	LS134LED-6H6-WD-23-PER ARCH	LIGMAN / UJE-80031-14W-XX-W30-XX-120/277V-DIM	INTERLUX / F CRD60 H 30 NR 24 [FINISH] [OPTIONS] /OT96-D010	0-10V DIMMING	EXTERIOR CANOPY	
S5	12W/FT LED, 5729 DELIVERED LUMENS, 3000K, 80+ CRI, 60, 000+ HOURS L70	HIGH OUTPUT LINEAR INGRADE LIGHT, 1P67 RATING, 60X10 DEGREE BEAM OPTICS	STANDARD	120-277	INGRADE	LUMASCAPE	LS3150-12W-830-LH-LENGTH PER PLAN-N-09-ND	LIGMAN / ULA-60002-57W-E-W30-120/277V	JE / R 10 WG [LENGTH] 30K [CABLE] [LOUVER OPTION] [INSTALLATION ACCESSORIES]	0-10V DIMMING	MEMORIAL	
S6	40W LED, 2500 DELIVERED LUMENS, 3500K, 80+ CRI	14'9"' SQUARE COLUMN PEDESTRIAN POLE, SYMMETRIC LIGHT DISTRIBUTION, DIE-CAST ALUMINUM HOUSING, MARINE GRADE, IP65 RATING	PER ARCH	120-277	ON GRADE	BEGA	84 065 + K35	LIGMAN / UVA-20001-39W-W35-XX-120/277V	APPROVED EQUAL		SITE WALKWAYS	
S7	3W/FT LED, 209LM/FT, 3000K, 90+ CRI	IP65 RATED TAPE LIGHT IN SILICONE SLEEVE AND ALUMINUM EXTRUSION, 120 DEGREE BEAM ANGLE, PROVIDE CONTINUOUS LENGTHS AS REQUIRED WITH ALL COMPONENTS NECESSARY FOR A COMPLETE SYSTEM	STANDARD	24/277	SURFACE IN EXTRUSIUM	KLUS LIGHTING	WP-35K-1220-24 + GIZA EXTRUSION	DL / DI-24V-BLX3-42-XX	Q-TRAN / SW24/3.0-WET-35-[CONNECTOR WIRE IN/OUT]-[LENGTH] / IQ-PH-80-120/24-[FINISH] / SLIM ST SST [LENS] [TYPE] LENGTH		LEVEL 3 SIGNAGE BACKLIGHT	REMOTE DRIVERS ABOVE NEARBY ACCESSIBLE CLG
S8	19.4 W LED, 1371 DELIVERED LUMENS, 3500K, 80+CRI	LED BOLLARD WITH ROTATIONALLY SYMMETRICAL LIGHT DISTRIBUTION FOR GLARE-FREE, DIE-CAST AND EXTRUDED MARINE GRADE	STANDARD	120/277	BOLLARD	BEGA	84-063 + K35	LIGMAN / UVA-10001-21W-W30-XX-120/277	APPROVED EQUAL		ENTRY SITE	
S9	10W/FT, 3993 DELIVEREDLUMENS, 3500K, 80+CRI	LINEAR GRAZER, EXTRUDED MARINE GRADE ALUMINUM, TEMPERED GLASS, IP66 RATED	STANDARD	120/277	SURFACE	LUMASCAPE	LS9032	ACCLAIM / LN-E-D-C-C	LUMENPULSE / LUMENFACADE EQUAL		MONUMENT SIGN	

EMERGENCY

Type	Lamp	Description	Finish	Voltage	Mounting	Manufacturer	Catalog Number	Alternate 1	Alternate 2	Control	Location	Comments
X1	5W LED	EDGE LIT EXIT SIGN, UNIVERSAL MOUNT, PROVIDE MOUNTING, QTY OF FACES, AND CHEVRON LOCATIONS PER PLAN, DAMP LOCATION, LETTER COLORS PER AHJ	BRUSHED ALUMINUM WITH MIRROR PANEL	120-277	UNIVERSAL	MULE LIGHTING	PVT SERIES	SURE-LITES / EUX7R	LITHONIA / EDG/EDGR [FACES] [GMR/RMR] EL	UNSWITCHED	THROUGHOUT	

BRINKLEY SARGENT WIGINTON ARCHITECTS

Architect: Brinkley Sargent Wiginton Architects (972) 960-9970
Landscape: Kendall Landscape Architecture (214) 739-3226
Structural: L.A. Fuess Partners, Inc (214) 593-1118
MEP: M-E Engineers (214) 741-1589
Civil: KSA Engineers, Inc (903) 236-7700
Technology: M-E Engineers (303) 421-6656

LONGVIEW POLICE DEPARTMENT

518 W. SOUTH ST. LONGVIEW, TEXAS 75601

History

#	Date	Description

STATE OF TEXAS
ANDREW SHIVLEY
109010
LICENSED
PROFESSIONAL ENGINEER
ME Engineers, Inc.
F-10231
08/19/2020

LIGHTING SCHEDULES

20513
08/19/2020
E040

BID ISSUE

8/17/2020 12:17:15 PM

C:\Revit Projects\2019\LPD_CENTRAL_E19_Derek.White97PLE.rvt

© 2020 Brinkley Sargent Wigginton Architects, Inc.

NETWORKED TIMECLOCK CONTROL ZONES			
ZONE	**DESCRIPTION**	**CONTROL TYPE**	**NOTES**
LEVEL 1			
1A	CORRIDORS	DISTRIBUTED POWER PACK	
1B	CORRIDOR - DAYLIGHT	DISTRIBUTED POWER PACK	PROVIDE DAYLIGHT HARVESTING
1C	24 HOUR AREA	DISTRIBUTED POWER PACK	
LEVEL 2			
2A	CORRIDORS	DISTRIBUTED POWER PACK	
2B	CORRIDOR - DAYLIGHT	DISTRIBUTED POWER PACK	PROVIDE DAYLIGHT HARVESTING
LEVEL 3			
3A	CORRIDORS	DISTRIBUTED POWER PACK	
3B	ENTRY LOBBY PENDANTS	DISTRIBUTED POWER PACK	PROVIDE DAYLIGHT HARVESTING
3C	RECORD WRITING PENDANTS	DISTRIBUTED POWER PACK	PROVIDE DAYLIGHT HARVESTING
SITE/FAÇADE			
S1	PEDESTRIAN POLES	RELAY PANEL	
S2	FLAG POLE UPLIGHTS	RELAY PANEL	
S3	MEMORIAL WALL INGRADES	RELAY PANEL	
S4	FAÇADE LIGHTING	RELAY PANEL	
S5	BUILDING SIGNAGE	DISTRIBUTED POWER PACK	
S6	MONUMENT SIGNAGE	RELAY PANEL	
S7	EXTERIOR CANOPY	RELAY PANEL	

LIGHTING CONTROL MATRIX [IECC 2015]

				Load Control						Control Devices										System Control Capabilities								
#	Typical Room	Fixture Level Control	Room (or Zone) Control	Local Switching	Local Dimming Control	Panel Based Relay	Distributed Network Control	Panel Based Dimming	UL924 control of emergency lights [1]	Wall Switch(es)	Dimmer Switch(es)	Wallbox Occupancy Sensor	Timer Switch	Key Switch	Room Combine Switch	Override Switch	PIR Wall/Ceiling Occupancy Sensor	Ultrasonic Wall/Ceiling Occupancy Sensor	Dual Tech Wall/Ceiling Occupancy Sensor	Photocell Sensor ON/OFF	Photocell Sensor Dimming	Exterior Photocell ON/OFF	Exterior Photocell Dimming	Timeclock ON/OFF	Warning Blink	After Hours Override	Vacancy Mode	Scene Control	AV Integration	Notes:
1	Site	X																				X		X		X				SITE PARKING LOT LED LIGHTING TO BE CONTROLLED VIA WIRELESS CONTROL SYSTEM. LIGHTS TO DIM TO 30% AFTERHOURS WITH AUTOMATIC FULL-ON VIA INTEGRAL OCCUPANY SENSORS
2	Façade		X			X			X													X		X		X				PROVIDE UL924 MODULES AT ALL EXTERIOR EMERGENCY FAÇADE LIGHTS.
3	Corridors / Lobbies / Vestibules		X				X		X							X	X			X				X	X	X				PROVIDE LOCAL PHOTOCELL DIMMING OF EXTERIOR CORRIDORS, VESTIBULES, ETC WHERE SHOWN ON PLAN. AFTER HOURS OVERRIDE VIA OCCUPANCY SENSORS IN CORRIDORS. PROVIDE TIMECLOCK CONTROL VIA DISTRIBUTED LIGHTING CONTROL SYSTEM IN LIEU OF RELAY PANEL.
4	Exit/Egress Stairs		X				X											X						X	X	X				LIGHTS TO DIM T0 50% AFTERHOURS. PROVIDE OCCUPANCY SENSOR AT EACH LANDING FOR AFTERHOURS OVERRIDE TO FULL-ON. PROVIDE DAYLIGHT HARVESTING WHERE SHOWN ON PLAN.
5	Private Office, Conf Room, Break Room, Work Room		X		X						X								X								X			PROVIDE WIRELESS SWITCH AND OCCUPANCY SENSOR, LUTRON VIVE OR APPROVED EQUAL, WHERE TAGGED "W" ON PLAN
6	Open Office (Interior)		X		X				X		X								X											
7	Large Restrooms		X	X					X					X					X											
8	Individual Restroom / Small Storage		X	X								X																		
9	Large Storage / Garages		X	X						X									X											
10	MEP Spaces		X	X						X																				
11	Training/EOC/Call Center		X		X						X								X		X						X	X		
12	Lockers/Toilets		X	X					X										X											
13	Conference Rooms - Perimeter		X		X						X								X		X						X			
14	Holding Cell		X	X						X																				REFER TO PLANS FOR APPROXIMATE SWITCH LOCATION AT PROCESS DESK, COORDINATE PRIOR TO ROUGH-IN.
15	Interogation/Holding Juv		X	X						X																				SWITCH TO BE LOCATED OUTSIDE DOOR.
16	Exercise		X		X				X		X								X		X						X			
17	Aux Call Taker		X				X	X											X					X		X				24 HOUR SECURITY ROOM, AFTER HOURS OVERRIDE VIA OCCUPANCY SENSORS. PROVIDE TIMECLOCK CONTROL VIA DISTRIBUTED LIGHTING CONTROL SYSTEM IN LIEU OF RELAY PANEL.

N : Refer to notes.
[1] : Refer to detail 4/E602 for UL924 control schematics.

Architect: Brinkley Sargent Wigginton Architects (972) 960-9970
Landscape: Kendall Landscape Architecture (214) 739-3226
Structural: L.A. Fuess Partners, Inc (214) 593-1118
MEP: M-E Engineers (214) 741-1589
Civil: KSA Engineers, Inc (903) 236-7700
Technology: M-E Engineers (303) 421-6656

BRINKLEY SARGENT WIGINTON ARCHITECTS

LONGVIEW POLICE DEPARTMENT

518 W. SOUTH ST. LONGVIEW, TEXAS 75601

History		
#	Date	Description

ANDREW SHIVLEY
109010
LICENSED
PROFESSIONAL ENGINEER
ME Engineers, Inc.
F-10231
08/19/2020

LIGHTING CONTROLS

BID ISSUE

20513
08/19/2020
E041

8/17/2020 9:48:43 AM

C:\Revit Projects\2015\LPD_CENTRAL_ES_Revit-WORKSTRIC.rvt

© 2020 Brinkley Sargent Wigintin Architects, Inc.

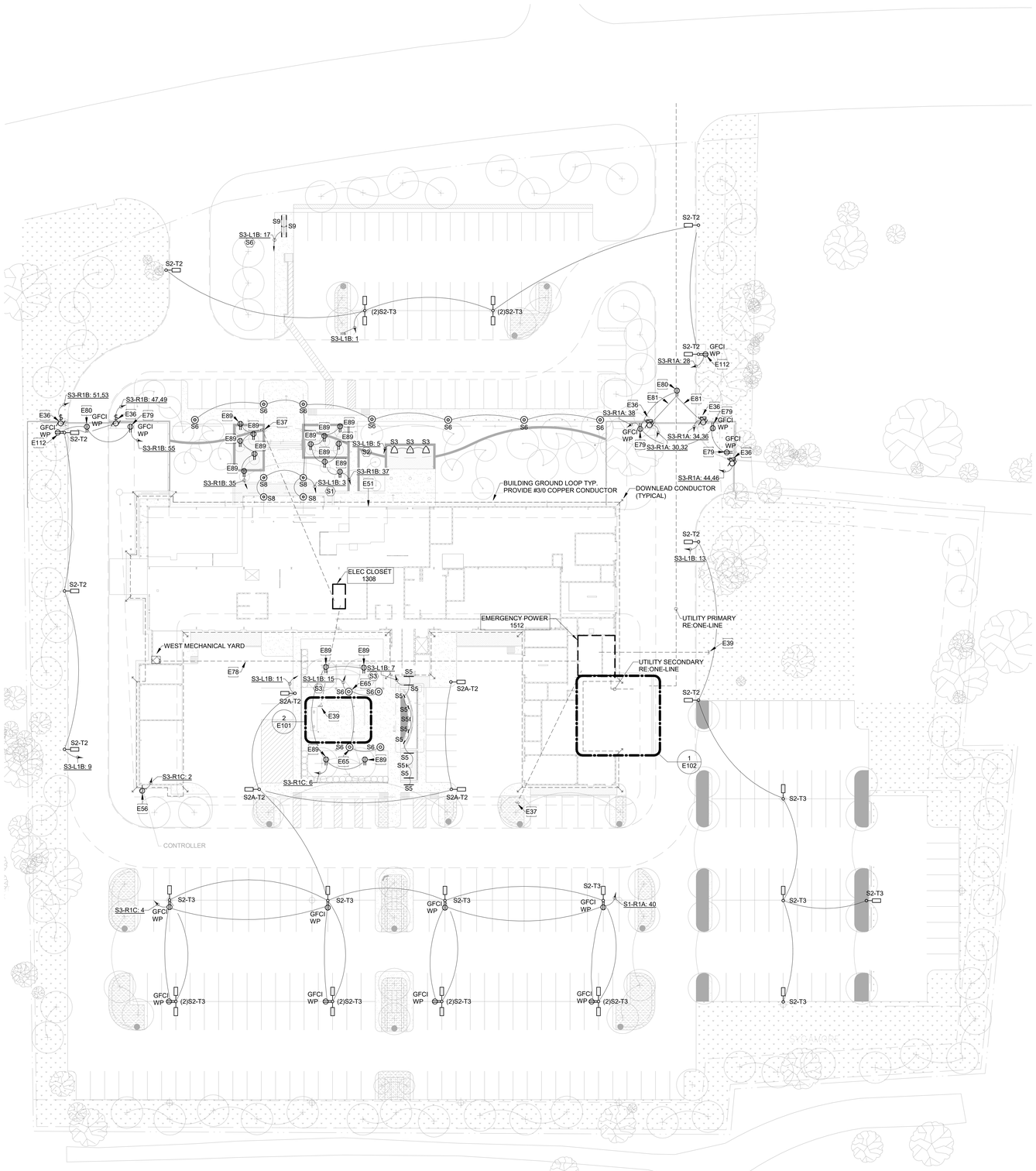

1 SITE ELECTRICAL PLAN
1" = 30'-0"

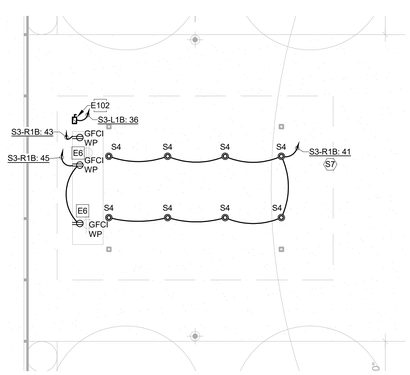

2 STAFF CANOPY PLAN DEDUCT ALTERNATE #3 ENLARGED
1/8" = 1'-0"

GENERAL NOTES:

1. REFER TO SHEET E040 FOR LIGHTING FIXTURE SCHEDULE.

2. REFER TO LANDSCAPE DRAWINGS FOR ALL SITE FIXTURE LOCATIONS MOUNTED IN HARDSCAPE OR SOFTSCAPE. FIXTURE LOCATIONS ARE DIAGRAMMATIC. THE INTENT IS TO ALIGN, CENTER, OR SPACE FIXTURES BETWEEN ARCHITECTURAL AND LANDSCAPE ELEMENTS.

3. ALL LANDSCAPE OR EXTERIOR BUILDING LIGHTING SHALL BE CONTROLLED VIA THE LIGHTING CONTROL SYSTEM.

4. REFER TO ARCHITECTURAL EXTERIOR ELEVATIONS FOR ALL FIXTURE LOCATIONS ON THE EXTERIOR OF THE BUILDING. FIXTURE LOCATIONS ARE DIAGRAMMATIC. THE INTENT IS TO ALIGN, CENTER, OR SPACE FIXTURES BETWEEN ARCHITECTURAL AND STRUCTURAL ELEMENTS.

5. PROVIDE A MINIMUM 1" PVC CONDUIT FOR ALL UNDERGROUND BRANCH CIRCUITS. ALL 90DEGREE ELBOWS SHALL BE PVC COATED RIGID.

6. PARKING LOT LIGHTS ARE TO BE FULLY SHIELDED AND WITH HOUSE-SIDE SHEILD TO NOT IMPACT ADJACENT RESIDENTIAL.

7. EXTERIOR JUNCTION BOX LOCATIONS ARE TO BE SUBMITTED FOR APPROVAL BY THE LANDSCAPE ARCHITECT AND ENGINEER OF RECORD.

KEYNOTES

E6	COORDINATE MOUNTING HEIGHT WITH ARCHITECT AT FURNITURE SUBMISSION.
E36	PROVIDE 208V POWER FOR MOTORIZED GATE. COORDINATE ALL INTERCONNECTING REQUIREMENTS WITH MANUFACTURER AND WITH SUBMITTED PRODUCT DATA.
E37	PROVIDE (2) 2" CONDUITS FROM ELECTRIC ROOM TO HANDHOLE FOR FUTURE EV CHARGING LOCATIONS. EXTERIOR LOCATION TO BE COORDINATED WITH LANDSCAOE ARCHITECT.
E39	PROVIDE (2) 2" CONDUITS TO HANDHOLE. CAP AND ENDS AND LABEL FOR FUTURE POWER AND LIGHTING TO OUTDOOR SITE AREA FROM MAIN EMERGENCY POWER 1512 ROOM.
E51	PROVIDE AN ALLOWANCE OF $60,000 FOR FAÇADE LIGHTING, MATERIALS ONLY. DESIGN TO BE ISSUED IN FUTURE PACKAGE.
E56	PROVIDE 120V/20A CIRCUIT FOR IRRIGATION CONTROLLER. COORDINATE EXACT LOCATION WITH ARCHITECT AND LANDSCAPE ARCHITECT PRIOR TO ROUGH-IN.
E65	LIGHT POLE NOT INCLUDED IN BASE BID. UPON ACCEPTANCE OF CANOPY LIGHTING DEDUCT ALTERNATE, LIGHT POLE TO BE ADDED.
E78	CONDUIT TO SERVE BUILDING, REFER TO ONE-LINE ON SHEET E002. PROVIDE (2) SPARE CONDUIT BETWEEN BUILDINGS. PROVIDE ENGRAVED LABEL IDENTIFYING SPARE CONDUIT WITH SIZE AND ORIGIN OR DESTINATION. ROUTE FROM MAIN EMERGENCY ROOM 1512.
E79	COORDINATE LOCATION OF RECEPTACLE WITH MOTORIZED GATE PRIOR TO INSTALLATION. PROVIDE ARLINGTON INDUSTRIES GPD19X. LANDSCAPE ARCHITECT TO CONFIRM FINISH COLOR, OR APPROVED EQUAL. REFER TO DETAIL 9/E603.
E80	COORDINATE ELECTRICAL CONNECTION AND PROVISIONS WITH SECURITY PEDESTAL MANUFACTURER PRIOR TO ROUGH-IN.
E81	PROVIDE (1) 1" CONDUIT FROM GATE MOTOR TO TOLL TAG POLE.
E89	PROVIDE ARLINGTON INDUSTRIES GARD-N-POST, GDP19X OR APPROVED EQUIVALENT, EXTERIOR, IN-USE, POWER ENCLOSURE FOR CHRISTMAS TREE LIGHTING. EXACT LOCATION AND FINISH COLOR TO BE STAKED BY LANDSCAPE ARCHITECT. REFER TO DETAIL 9/E603
E102	DISCONNECT FOR ELECTRIC WATER HEATER AT STAFF CANOPY LOCATION. COORDINATE FINAL EQUIPMENT LOCATION WITH DIVISION 22 PRIOR TO INSTALLATION.
E112	FUTURE CAMERA LOCATION. PROVIDE SPARE DEDICATED ½ INCH PVC OR EMT PATHWAY TO ¾" THREADED NIPPED AT 15' UP POLE. COORDINATE EXACT LOCATION WITH DIVISION 27 PRIOR TO ORDERING LIGHT POLE. REFER TO DETAIL 7 ON SHEET E603 FOR POLE BASE ENCLOSURE.

Architect: Brinkley Sargent Wigintin Architects (972) 960-9970
Landscape: Kendall Landscape Architecture (214) 739-3226
Structural: L.A. Fuess Partners, Inc (214) 593-1118
MEP: M-E Engineers (214) 741-1589
Civil: KSA Engineers, Inc (903) 236-7700
Technology: M-E Engineers (303) 421-6656

BRINKLEY SARGENT WIGINTON ARCHITECTS

LONGVIEW POLICE DEPARTMENT

518 W. SOUTH ST. LONGVIEW, TEXAS 75601

History

#	Date	Description

STATE OF TEXAS
ANDREW SHIVLEY
109010
LICENSED
PROFESSIONAL ENGINEER
ME Engineers, Inc.
F-10231
08/19/2020

SITE ELECTRICAL PLAN

20513
08/19/2020
E101

BID ISSUE

6/17/2020 12:17:18 PM

C:\Revit Projects\2015\JRL_CENTRAL_E19_Dave.Whites@PLT.rvt

© 2020 Brinkley Sargent Wigintion Architects, Inc.

GENERAL NOTES:

1. REFER TO SHEET E040 FOR LIGHTING FIXTURE SCHEDULE.

2. REFER TO LANDSCAPE DRAWINGS FOR ALL SITE FIXTURE LOCATIONS MOUNTED IN HARDSCAPE OR SOFTSCAPE. FIXTURE LOCATIONS ARE DIAGRAMMATIC. THE INTENT IS TO ALIGN, CENTER, OR SPACE FIXTURES BETWEEN ARCHITECTURAL AND LANDSCAPE ELEMENTS.

3. ALL LANDSCAPE OR EXTERIOR BUILDING LIGHTING SHALL BE CONTROLLED VIA THE LIGHTING CONTROL SYSTEM.

4. REFER TO ARCHITECTURAL EXTERIOR ELEVATIONS FOR ALL FIXTURE LOCATIONS ON THE EXTERIOR OF THE BUILDING. FIXTURE LOCATIONS ARE DIAGRAMMATIC. THE INTENT IS TO ALIGN, CENTER, OR SPACE FIXTURES BETWEEN ARCHITECTURAL AND STRUCTURAL ELEMENTS.

5. PROVIDE A MINIMUM 1" PVC CONDUIT FOR ALL UNDERGROUND BRANCH CIRCUITS. ALL 90DEGREE ELBOWS SHALL BE PVC COATED RIGID.

6. PARKING LOT LIGHTS ARE TO BE FULLY SHIELDED AND WITH HOUSE-SIDE SHEILD TO NOT IMPACT ADJACENT RESIDENTIAL.

7. EXTERIOR JUNCTION BOX LOCATIONS ARE TO BE SUBMITTED FOR APPROVAL BY THE LANDSCAPE ARCHITECT AND ENGINEER OF RECORD.

KEYNOTES

E55	COORDINATE SIZE AND CONSTRUCTION REQUIREMENTS OF UTILITY TRANSFORMER PAD WITH UTILITY SERVICE PROVIDER PRIOR TO ROUGH-IN.
E91	REMOTE EMERGENCY PUSH BUTTON FOR GENERATOR. COORDINATE FINAL LOCATION WITH ENGINEER AND OWNER PRIOR TO ROUGH-IN.
E113	UTILITY METER. EXACT LOCATION AND REQUIREMENTS FOR RACEWAY AND BOXES TO BE COORINDATED WITH UTILITY PROVIDER.
E116	ACCEPTANCE OF ALTERNATE PARALLEL GENERATOR SET IS TO BE COORDINATED DURING SUBMITTAL PHASE FOR FINAL PLACEMENT FOR CLEARANCE REQUIREMENTS OF UTILITY TRANSFORMER.

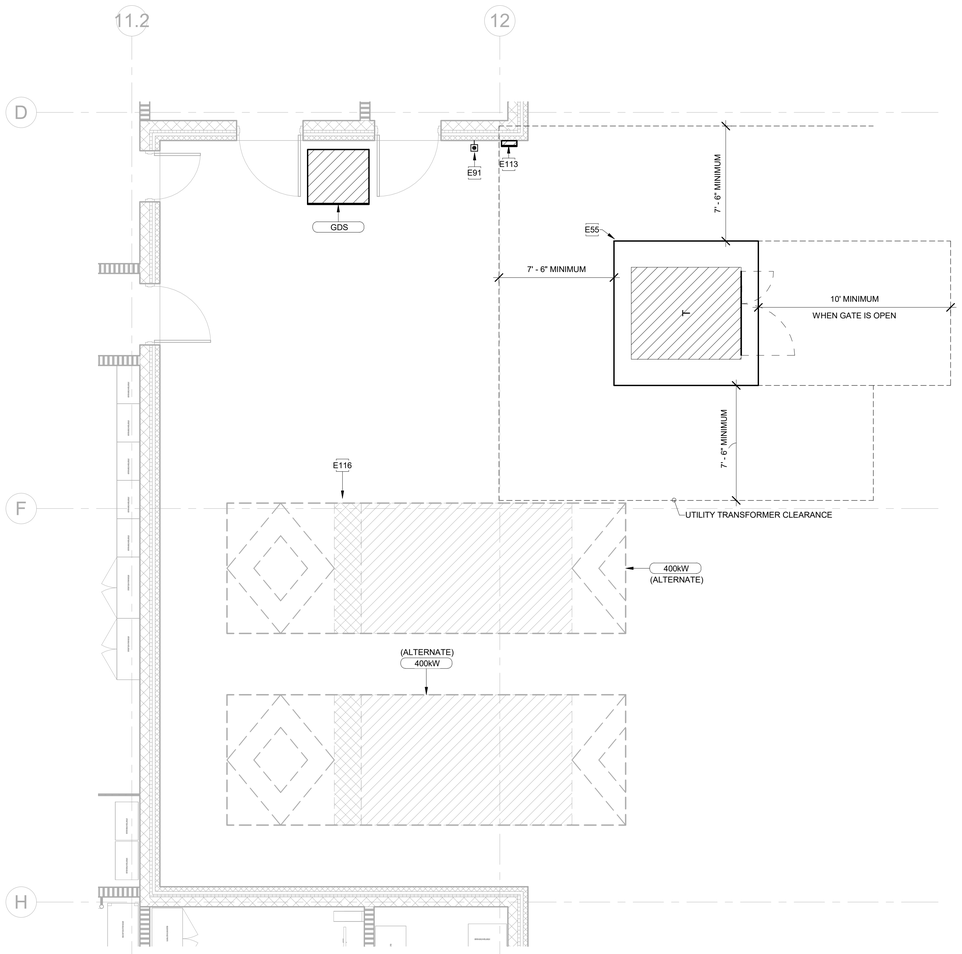

2 LEVEL 1 - ELECTRICAL ENLARGED PLAN - UTILITY YARD ALTERNATE
1/4" = 1'-0"

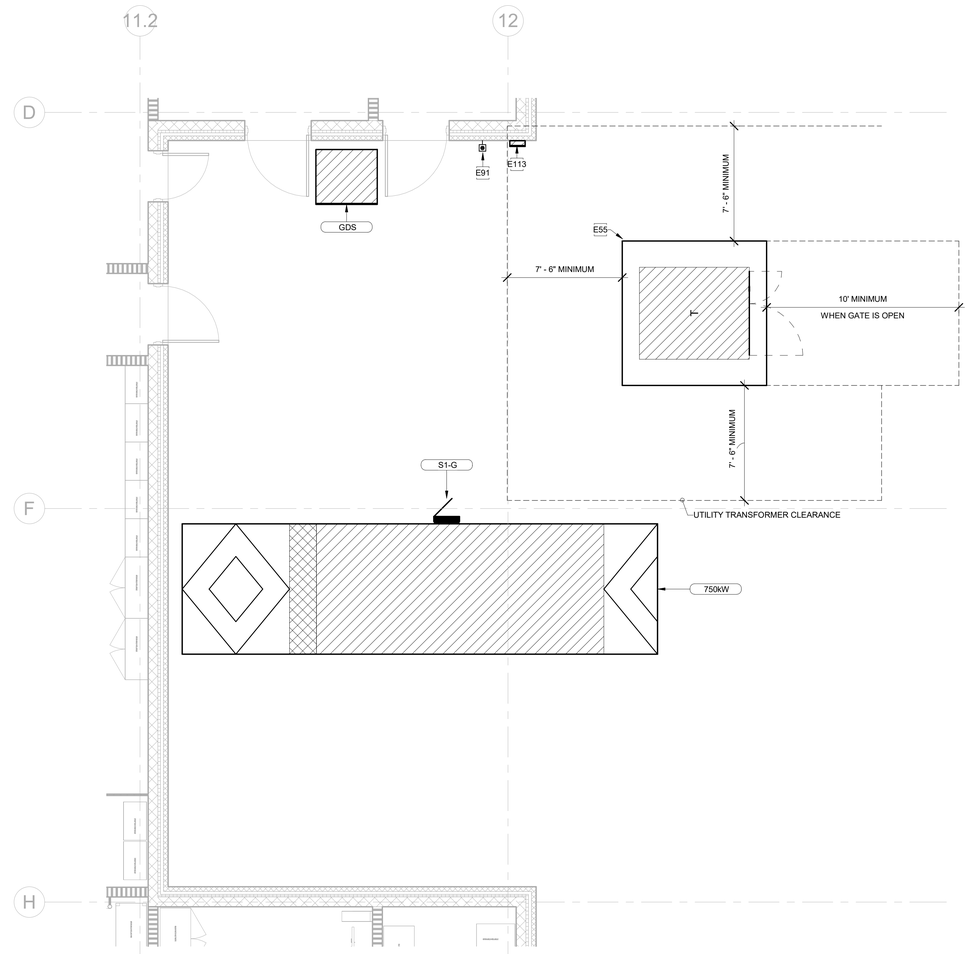

1 LEVEL 1 - ELECTRICAL ENLARGED PLAN - UTILITY YARD
1/4" = 1'-0"

Architect: Brinkley Sargent Wigintion Architects (972) 960-9970
Landscape: Kendall Landscape Architecture (214) 739-3226
Structural: L.A. Fuess Partners, Inc (214) 593-1118
MEP: M-E Engineers (214) 741-1589
Civil: KSA Engineers, Inc (903) 236-7700
Technology: M-E Engineers (303) 421-6656

BRINKLEY SARGENT WIGINTON ARCHITECTS

LONGVIEW POLICE DEPARTMENT

518 W. SOUTH ST. LONGVIEW, TEXAS 75601

History		
#	Date	Description

STATE OF TEXAS
ANDREW SHIVLEY
109010
LICENSED
PROFESSIONAL ENGINEER
ME Engineers, Inc.
F-10231
08/19/2020

SITE ELECTRICAL ENLARGED PLAN

20513
08/19/2020
E102

BID ISSUE

8/17/2020 9:48:51 AM

C:\Revit Projects\2019\LPD_CENTRAL_E19_Series.Wrnw2PSLE.rvt

© 2020 Brinkley Sargent Wigginton Architects, Inc.

1 LEVEL 1 - ELECTRICAL OVERALL PLAN
3/32" = 1'-0"

GENERAL NOTES:

1. ELECTRICAL CONTRACTOR SHALL COORDINATE EXACT LOCATION OF ALL MECHANICAL UNITS WITH MECHANICAL CONTRACTOR.

2. ALL EXPOSED CONDUIT SHALL BE ROUTED PERPENDICULAR, PARALLEL, AND TIGHT TO COLUMNS AND BEAMS. ALL EXPOSED CONDUIT ROUTING SHALL BE COORDINATED WITH THE ARCHITECT PRIOR TO INSTALLATION AND INSTALLED IN A NEAT AND CONSISTENT MANNER. NO ADDITIONAL COST TO OWNER WILL BE ALLOWED FOR RELOCATING CONDUIT DUE TO THE LACK OF COORDINATION WITH ARCHITECT. ALL SURFACE MOUNTED CONDUIT WHERE EXPOSED TO PUBLIC AREAS SHALL BE PAINTED. PAINT COLOR TO BE DETERMINED BY THE ARCHITECT.

3. ALL BACK BOXES SHALL BE FLUSH MOUNTED UNLESS NOTED OTHERWISE. ALL VERTICAL SECTIONS OF CONDUIT SHALL BE CONCEALED. CONTRACTOR SHALL COORDINATE INSTALLATION OF CONDUIT AND BACK BOXES IN CONCRETE, MASONRY AND GYP. WALLS.

4. THIS CONTRACTOR SHALL REFER TO "M" AND "P" SERIES DRAWINGS FOR ALL MECHANICAL EQUIPMENT ELECTRICAL CONNECTIONS.

5. CIRCUITS TO ALL MECHANICAL EQUIPMENT SHALL BE DEDICATED UNLESS NOTED OTHERWISE.

6. WALL MOUNTED TVS INSTALLATION TO NOT PROTRUDE MORE THAN 4" WHEN INSTALLED BETWEEN 27"-80" HIGH. REFER TO ARCHITECTURAL DRAWINGS FOR FINAL ELEVATIONS.

KEYNOTES

EMERGENCY POWER LEGEND

- PRIORITY 1
- PRIORITY 2
- PRIORITY 3
- UPS POWER

NOTE: REFER TO ONE-LINE FOR ATS SCHEDULE

BRINKLEY SARGENT WIGGINTON ARCHITECTS

Architect: Brinkley Sargent Wigginton Architects (972) 960-9970
Landscape: Kendall Landscape Architecture (214) 739-3226
Structural: L.A. Fuess Partners, Inc (214) 593-1118
MEP: M-E Engineers (214) 741-1589
Civil: KSA Engineers, Inc (903) 236-7700
Technology: M-E Engineers (303) 421-6656

LONGVIEW POLICE DEPARTMENT

518 W. SOUTH ST. LONGVIEW, TEXAS 75601

History		
#	Date	Description

TEXAS REGISTERED ANDREW SHIVLEY 109010 LICENSED PROFESSIONAL ENGINEER
ME Engineers, Inc.
F-10231
08/19/2020

LEVEL 1 - ELECTRICAL OVERALL PLAN

BID ISSUE

20513
08/19/2020
E210

C:\Revit Projects\2015\LPD_CENTRAL_E15_Shiv.wbrinkley19.rvt

8/17/2020 9:45:57 AM

© 2020 Brinkley Sargent Wigginton Architects, Inc.

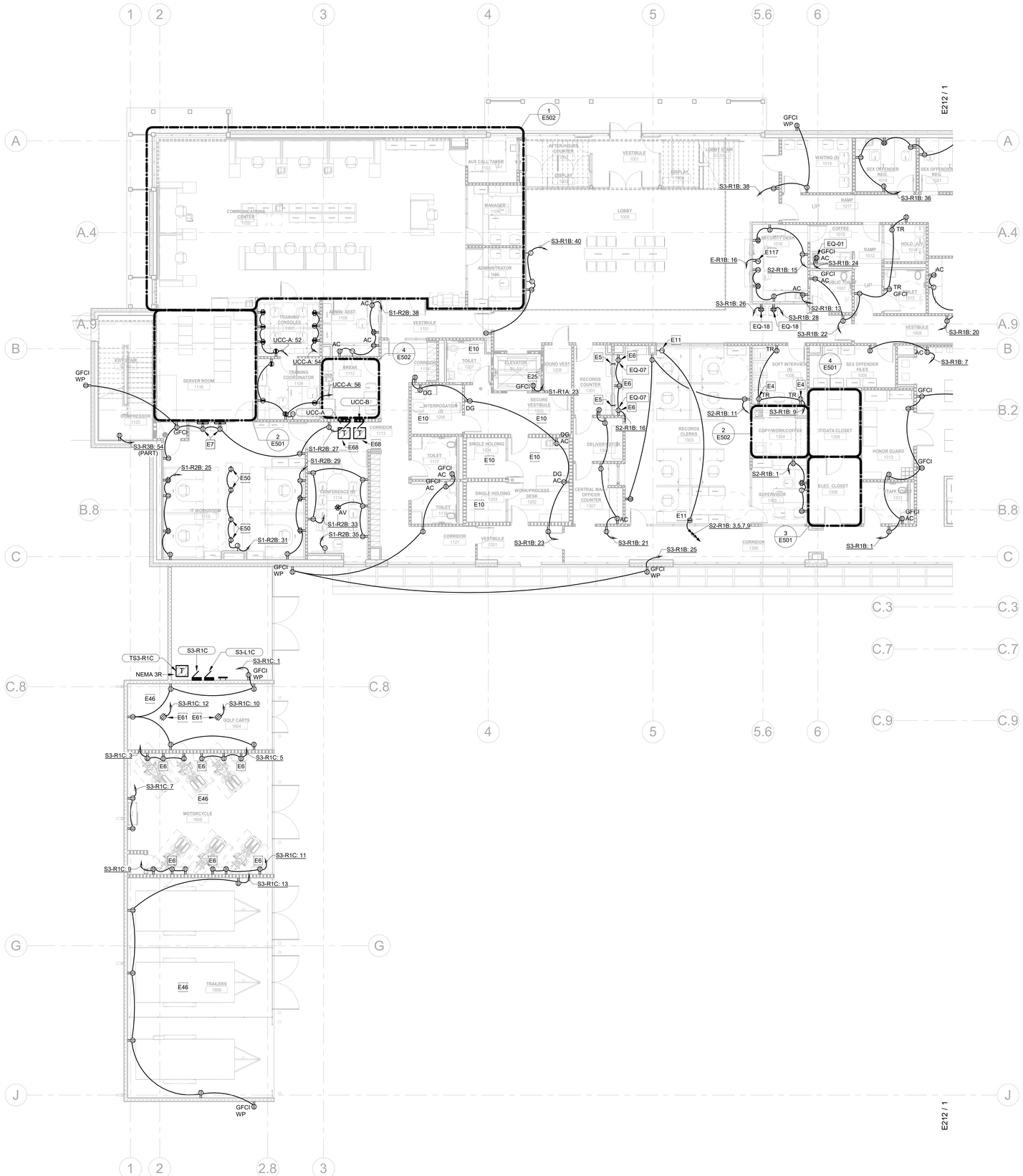

1 LEVEL 1 - ELECTRICAL PLAN - WEST
1/8" = 1'-0"

GENERAL NOTES:

1. ELECTRICAL CONTRACTOR SHALL COORDINATE EXACT LOCATION OF ALL MECHANICAL UNITS WITH MECHANICAL CONTRACTOR.

2. ALL EXPOSED CONDUIT SHALL BE ROUTED PERPENDICULAR, PARALLEL, AND TIGHT TO COLUMNS AND BEAMS. ALL EXPOSED CONDUIT ROUTING SHALL BE COORDINATED WITH THE ARCHITECT PRIOR TO INSTALLATION AND INSTALLED IN A NEAT AND CONSISTENT MANNER. NO ADDITIONAL COST TO OWNER WILL BE ALLOWED FOR RELOCATING CONDUIT DUE TO THE LACK OF COORDINATION WITH ARCHITECT. ALL SURFACE MOUNTED CONDUIT WHERE EXPOSED TO PUBLIC AREAS SHALL BE PAINTED. PAINT COLOR TO BE DETERMINED BY THE ARCHITECT.

3. ALL BACK BOXES SHALL BE FLUSH MOUNTED UNLESS NOTED OTHERWISE. ALL VERTICAL SECTIONS OF CONDUIT SHALL BE CONCEALED. CONTRACTOR SHALL COORDINATE INSTALLATION OF CONDUIT AND BACK BOXES IN CONCRETE, MASONRY AND GYP. WALLS.

4. THIS CONTRACTOR SHALL REFER TO "M" AND "P" SERIES DRAWINGS FOR ALL MECHANICAL EQUIPMENT ELECTRICAL CONNECTIONS.

5. CIRCUITS TO ALL MECHANICAL EQUIPMENT SHALL BE DEDICATED UNLESS NOTED OTHERWISE.

6. WALL MOUNTED TVS INSTALLATION TO NOT PROTRUDE MORE THAN 4" WHEN INSTALLED BETWEEN 27"-80" HIGH. REFER TO ARCHITECTURAL DRAWINGS FOR FINAL ELEVATIONS.

KEYNOTES

E4	PROVIDE TAMPER RESISTANT, HALF-CONTROLLED PLUG LOAD DUPLEX RECEPTACLE FOR LAMP WITH PERMANENT MARKING INDICATED CONTROLLED SIDE. LEGRAND TR2636CH OR APPROVED EQUAL. ARCHITECT TO SELECT COLOR. COORDINATE LOCATION WITH FINAL FURNITURE LAYOUT PRIOR TO ROUGH-IN.
E5	PROVIDE (1) ½" CONDUIT STUBBED THROUGH WALL FOR CONNECTION BETWEEN INTERCOM SPEAKER MICROPHONE SYSTEM. COORDINATE HEIGHT WITH ARCHITECT AT FURNITURE SUBMISSION.
E6	COORDINATE MOUNTING HEIGHT WITH ARCHITECT AT FURNITURE SUBMISSION.
E7	PROVIDE 4'-0" VERTICAL POWER STRIP WITH A DUPLEX EVERY 8".
E10	ELECTRICAL DEVICES IN THIS ROOM/SPACE ARE TO BE DETENTION GRADE- INCLUDING BUT NOT LIMITED TO, RECEPTACLES, SWITCHES, SENSORS, FIRE ALARM, AND LIGHTING.
E11	8-WIRE FURNITURE FEED. PROVIDE TIE BREAKER FOR SHARED NEUTRAL CIRCUITS. PROVIDE FLOOR/WALL BOX WITH 4-CIRCUIT HOMERUN (WHIP). COORDINATE LOCATION WITH TECHNOLOGY FLOOR/WALL BOX. VERIFY LOCATION WITH ARCHITECT PRIOR TO ROUGH-IN. FURNITURE INSTALLER TO DISTRIBUTE CIRCUITS EVENLY AMONG CUBES AND PROVIDE DEDICATED RECEPTACLES AT LOCATIONS NOTED.
E25	DEDICATED 120V 20A/1P CIRCUIT FOR ELEVATOR PIT RECEPTACLE AND LIGHTING. REQUIRED LIGHTING SHALL NOT BE CONNECTED TO THE LOAD SIDE OF THE GFCI. LIGHT FIXTURE TYPE SHOWN ON ASSOCIATED E411/E412 SERIES. THE INSTALLATION SHALL CONFORM TO NEC 620.24.
E46	ALL RECEPTACLES IN THIS AREA TO HAVE GFCI PROTECTION ENCLOSED IN A WEATHERPROOF COVER.
E50	PROVIDE TABLETOP MOUNTED RECEPTACLE. CONTRACTOR IS TO COORDINATE WITH MILLWORK INSTALLER TO PROVIDE CABLING AND RECEPTACLES WITHIN MILLWORK.
E61	PROVIDE HEAVY DUTY DROP CORD REEL WITH DUPLEX GFCI CONNECTION. REELCRAFT MODEL L 4545 123 7A OR APPROVED EQUIVALENT, MINIMUM 30' CORD LENGTH, MOUNTING HEIGHT BY ARCH.
E68	SUSPENDED TRANSFORMER ABOVE CEILING. REFER TO DETAIL 6/E603.
E117	PROVIDE DEDICATED 120V EMERGENCY POWER FOR MASTER CONTROL STATION OF 2-WAY COMMUNICATION CALL BUTTON. COORDINATE FINAL LOCATION OF CONTROL STATION WITH ELEVATOR MANUFACTURER AND OWNER PRIOR TO ROUGH-IN.

BRINKLEY SARGENT WIGINTON ARCHITECTS

Architect: Brinkley Sargent Wigginton Architects (972) 960-9970
Landscape: Kendall Landscape Architecture (214) 739-3226
Structural: L.A. Fuess Partners, Inc (214) 593-1118
MEP: M-E Engineers (214) 741-1589
Civil: KSA Engineers, Inc (903) 236-7700
Technology: M-E Engineers (303) 421-6656

LONGVIEW POLICE DEPARTMENT

518 W. SOUTH ST. LONGVIEW, TEXAS 75601

History		
#	Date	Description

ANDREW SHIVLEY
109010
LICENSED PROFESSIONAL ENGINEER
ME Engineers, Inc.
F-10231
08/19/2020

LEVEL 1 - ELECTRICAL PLAN - WEST

BID ISSUE

20513
08/19/2020
E211

8/17/2020 9:49:03 AM

C:\Revit Projects\2019\URL_CENTRAL_ETS_Revit-MEP\E.rvt

© 2020 Brinkley Sargent Wiginton Architects, Inc.

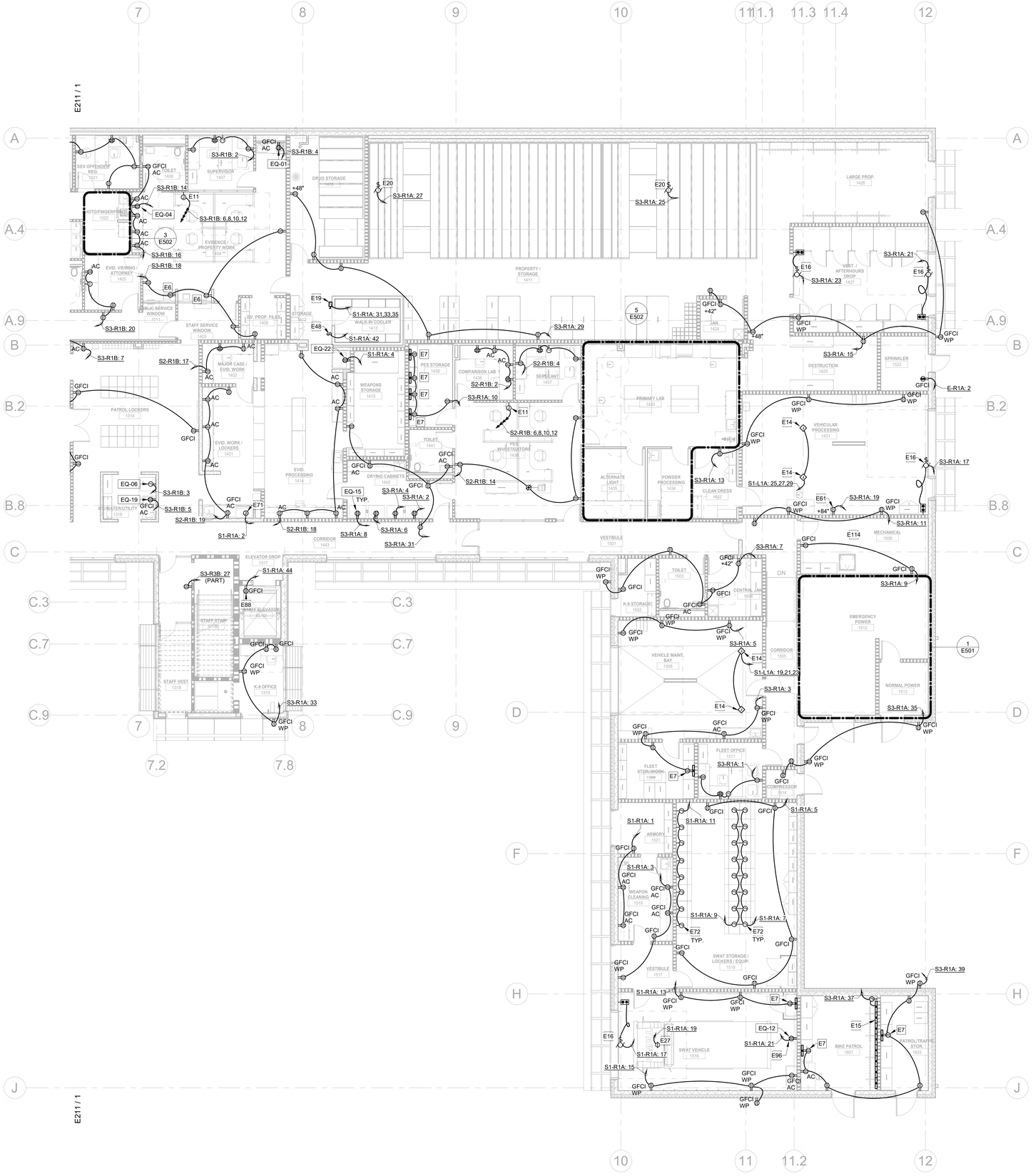

1 LEVEL 1 - ELECTRICAL PLAN - EAST
1/8" = 1'-0"

GENERAL NOTES:

1. ELECTRICAL CONTRACTOR SHALL COORDINATE EXACT LOCATION OF ALL MECHANICAL UNITS WITH MECHANICAL CONTRACTOR.

2. ALL EXPOSED CONDUIT SHALL BE ROUTED PERPENDICULAR, PARALLEL, AND TIGHT TO COLUMNS AND BEAMS. ALL EXPOSED CONDUIT ROUTING SHALL BE COORDINATED WITH THE ARCHITECT PRIOR TO INSTALLATION AND INSTALLED IN A NEAT AND CONSISTENT MANNER. NO ADDITIONAL COST TO OWNER WILL BE ALLOWED FOR RELOCATING CONDUIT DUE TO THE LACK OF COORDINATION WITH ARCHITECT. ALL SURFACE MOUNTED CONDUIT WHERE EXPOSED TO PUBLIC AREAS SHALL BE PAINTED. PAINT COLOR TO BE DETERMINED BY THE ARCHITECT.

3. ALL BACK BOXES SHALL BE FLUSH MOUNTED UNLESS NOTED OTHERWISE. ALL VERTICAL SECTIONS OF CONDUIT SHALL BE CONCEALED. CONTRACTOR SHALL COORDINATE INSTALLATION OF CONDUIT AND BACK BOXES IN CONCRETE, MASONRY AND GYP. WALLS.

4. THIS CONTRACTOR SHALL REFER TO "M" AND "P" SERIES DRAWINGS FOR ALL MECHANICAL EQUIPMENT ELECTRICAL CONNECTIONS.

5. CIRCUITS TO ALL MECHANICAL EQUIPMENT SHALL BE DEDICATED UNLESS NOTED OTHERWISE.

6. WALL MOUNTED TV'S INSTALLATION TO NOT PROTRUDE MORE THAN 4" WHEN INSTALLED BETWEEN 27"-80" HIGH. REFER TO ARCHITECTURAL DRAWINGS FOR FINAL ELEVATIONS.

KEYNOTES

E6	COORDINATE MOUNTING HEIGHT WITH ARCHITECT AT FURNITURE SUBMISSION.
E7	PROVIDE 4'-0" VERTICAL POWER STRIP WITH A DUPLEX EVERY 8".
E11	8-WIRE FURNITURE FEED. PROVIDE TIE BREAKER FOR SHARED NEUTRAL CIRCUITS. PROVIDE FLOORWALL BOX WITH 4-CIRCUIT HOMERUN (WHIP). COORDINATE LOCATION WITH TECHNOLOGY FLOORWALL BOX. VERFIY LOCATION WITH ARCHITECT PRIOR TO ROUGH-IN. FURNITURE INSTALLER TO DISTRIBUTE CIRCUITS EVENLY AMONG CUBES AND PROVIDE DEDICATED RECEPTACLES AT LOCATIONS NOTED.
E14	PROVIDE STARLINE 60A TRACK BUSWAY, T2 SYSTEM, PRODUCT NUMBER/USD607Z04SXXYY-0200C-XX XX, WITH QUANTITY OF 4, CORD REEL PRODUCT UNITS/CBDC60E6-25-520Q-4-CCR. COORDINATE WITH ARCHITECT FOR FINAL PAINT FINISH. CONTRACTOR TO FIELD COORDINATE FINAL LENGTH OF BUSWAY.
E15	PROVIDE LEGRAND SERIES DS4000 WIREMOLD OR APPROVED EQUAL. PROVIDE LENGTH PER PLAN AND MOUNT AT 48" AFF. COORDINATE ADDITIONAL DATA DEVICES WITH DIVISION 27 PRIOR TO PURCHASE AND ROUGH-IN.
E16	PROVIDE 120V/20A DEDICATED CIRCUIT FOR OVERHEAD DOORS. PROVIDE CONDUIT, CONTROL WIRING & CONTOL STATION FOR COMPLETE SYSTEM OPERATION. CONTROL LOCATION TO BE COORDINATED WITH ARCHITECT PRIOR TO ROUGH-IN.
E19	COORDINATE LOCATION OF COOLER COMPRESSOR UNIT. PROVIDE 30A/2P FUSED DISCONNECT.
E20	PROVIDE DEDICATED 120V/20A CIRCUIT FOR MOTORIZED SHELVING.
E27	PROVIDE REELCRAFT HEAVY DUTY MODEL L 4545 13 7A OR APPROVED EQUAL WITH NEMA 5-30R CONNECTION FOR SWAT VEHICLE SHORE CONNECTION. CONFIRM WITH OWNER PRIOR TO PURCHASE AND INSTALLATION.
E46	ALL RECEPTACLES IN THIS AREA TO HAVE GFCI PROTECTION ENCLOSED IN A WEATHERPROOF COVER.
E48	PROVIDE DISCONNECT SWITCH FOR 120V/1PH/20A CIRCUIT FOR WALK-IN COOLER LIGHTING. COORDINATE EXACT LOCATION WITH SELECTED MANUFACTURER.
E61	PROVIDE HEAVY DUTY DROP CORD REEL WITH DUPLEX GFCI CONNECTION, REELCRAFT MODEL L 4545 123 7A OR APPROVED EQUIVALENT. MINIMUM 30' CORD LENGTH, MOUNTING HEIGHT BY ARCH.
E71	COORDINATE ELECTRICAL CONNECTION FOR FUME HOOD WITH EQUIPMENT MANUFACTURER PRIOR TO ROUGH-IN.
E72	PROVIDE 120V/20A CONNECTION TO EACH LOCKER FOR LOCKER POWER. COORDINATE LOCATION OF BACKBOX WITH LOCKER MANUFACTURER PRIOR TO ROUGH-IN.
E88	PROVIDE DEDICATED 120V, 20A/1PH CIRCUIT FOR ELEVATOR PIT RECEPTACLE AND LIGHTING. REQUIRED LIGHTING SHALL NOT BE CONNECTED TO THE LOAD SIDE OF THE GFCI.
E96	DUPLEX FOR WALL MOUNT PROJECTOR MOUNT AT 96" ABOVE WHITEBOARD COORDINATE WITH TECHNOLOGY.
E114	COORDINATE WITH DIVISION 23 FOR FINAL LOCATION OF RECEPTACLES WITH MECHANICAL EQUIPMENT INSTALLATION.

BRINKLEY SARGENT WIGINTON ARCHITECTS

Architect: Brinkley Sargent Wigginton Architects (972) 960-9970
Landscape: Kendall Landscape Architecture (214) 739-3226
Structural: L.A. Fuess Partners, Inc (214) 593-1118
MEP: M-E Engineers (214) 741-1589
Civil: KSA Engineers, Inc (903) 236-7700
Technology: M-E Engineers (303) 421-6656

LONGVIEW POLICE DEPARTMENT

518 W. SOUTH ST. LONGVIEW, TEXAS 75601

History		
#	Date	Description

STATE OF TEXAS
ANDREW SHIVLEY
109010
LICENSED PROFESSIONAL ENGINEER
ME Engineers, Inc.
F-10231
08/19/2020

LEVEL 1 - ELECTRICAL PLAN - EAST

20513
08/19/2020
E212

BID ISSUE

8/17/2020 12:17:24 PM

C:\Revit Projects\2019\LPD_CENTRAL_E19_Derek.Whitley2019.rvt

© 2020 Brinkley Sargent Wigginton Architects, Inc.

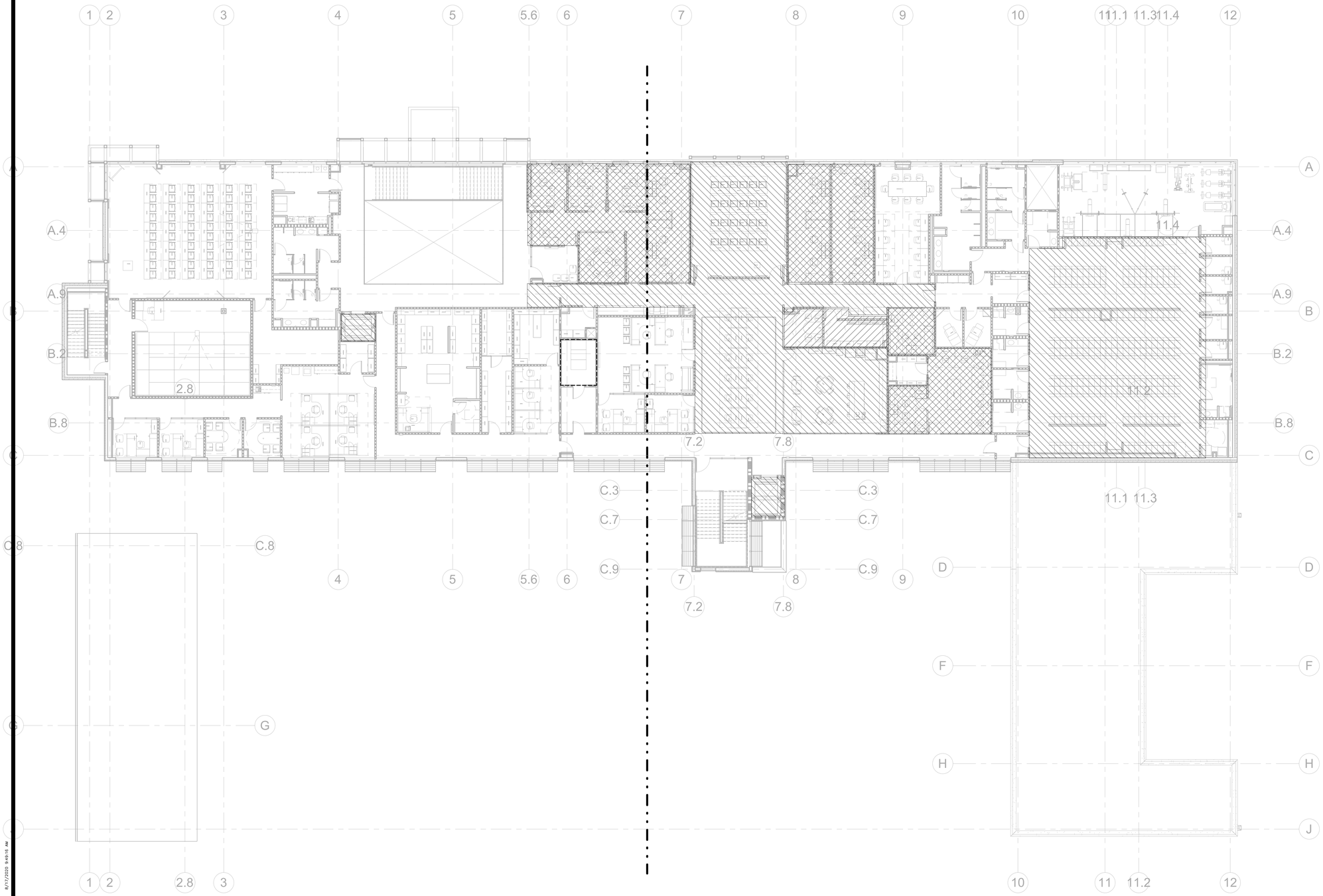

1 LEVEL 2 - ELECTRICAL OVERALL PLAN
3/32" = 1'-0"

GENERAL NOTES:

1. ELECTRICAL CONTRACTOR SHALL COORDINATE EXACT LOCATION OF ALL MECHANICAL UNITS WITH MECHANICAL CONTRACTOR.

2. ALL EXPOSED CONDUIT SHALL BE ROUTED PERPENDICULAR, PARALLEL, AND TIGHT TO COLUMNS AND BEAMS. ALL EXPOSED CONDUIT ROUTING SHALL BE COORDINATED WITH THE ARCHITECT PRIOR TO INSTALLATION AND INSTALLED IN A NEAT AND CONSISTENT MANNER. NO ADDITIONAL COST TO OWNER WILL BE ALLOWED FOR RELOCATING CONDUIT DUE TO THE LACK OF COORDINATION WITH ARCHITECT. ALL SURFACE MOUNTED CONDUIT WHERE EXPOSED TO PUBLIC AREAS SHALL BE PAINTED. PAINT COLOR TO BE DETERMINED BY THE ARCHITECT.

3. ALL BACK BOXES SHALL BE FLUSH MOUNTED UNLESS NOTED OTHERWISE. ALL VERTICAL SECTIONS OF CONDUIT SHALL BE CONCEALED. CONTRACTOR SHALL COORDINATE INSTALLATION OF CONDUIT AND BACK BOXES IN CONCRETE, MASONRY AND GYP. WALLS.

4. THIS CONTRACTOR SHALL REFER TO "M" AND "P" SERIES DRAWINGS FOR ALL MECHANICAL EQUIPMENT ELECTRICAL CONNECTIONS.

5. CIRCUITS TO ALL MECHANICAL EQUIPMENT SHALL BE DEDICATED UNLESS NOTED OTHERWISE.

6. WALL MOUNTED TVS INSTALLATION TO NOT PROTRUDE MORE THAN 4" WHEN INSTALLED BETWEEN 27"-80" HIGH. REFER TO ARCHITECTURAL DRAWINGS FOR FINAL ELEVATIONS.

KEYNOTES

EMERGENCY POWER LEGEND

- PRIORITY 1
- PRIORITY 2
- PRIORITY 3
- UPS POWER

NOTE: REFER TO ONE-LINE FOR ATS SCHEDULE

BRINKLEY SARGENT WIGINTON ARCHITECTS

Architect: Brinkley Sargent Wigginton Architects (972) 960-9970
Landscape: Kendall Landscape Architecture (214) 739-3226
Structural: L.A. Fuess Partners, Inc (214) 593-1118
MEP: M-E Engineers (214) 741-1589
Civil: KSA Engineers, Inc (903) 236-7700
Technology: M-E Engineers (303) 421-6656

LONGVIEW POLICE DEPARTMENT

518 W. SOUTH ST. LONGVIEW, TEXAS 75601

History		
#	Date	Description

REGISTERED PROFESSIONAL ENGINEER
ANDREW SHIVLEY
109010
LICENSED
STATE OF TEXAS

ME Engineers, Inc.
F-10231
08/19/2020

LEVEL 2 - ELECTRICAL OVERALL PLAN

20513
08/19/2020

E220

BID ISSUE

8/17/2020 9:49:18 AM

C:\Revit Projects\2019\URL_CENTRAL_ETS_Revit-WH19.rvt

© 2020 Brinkley Sargent Wigginton Architects, Inc.

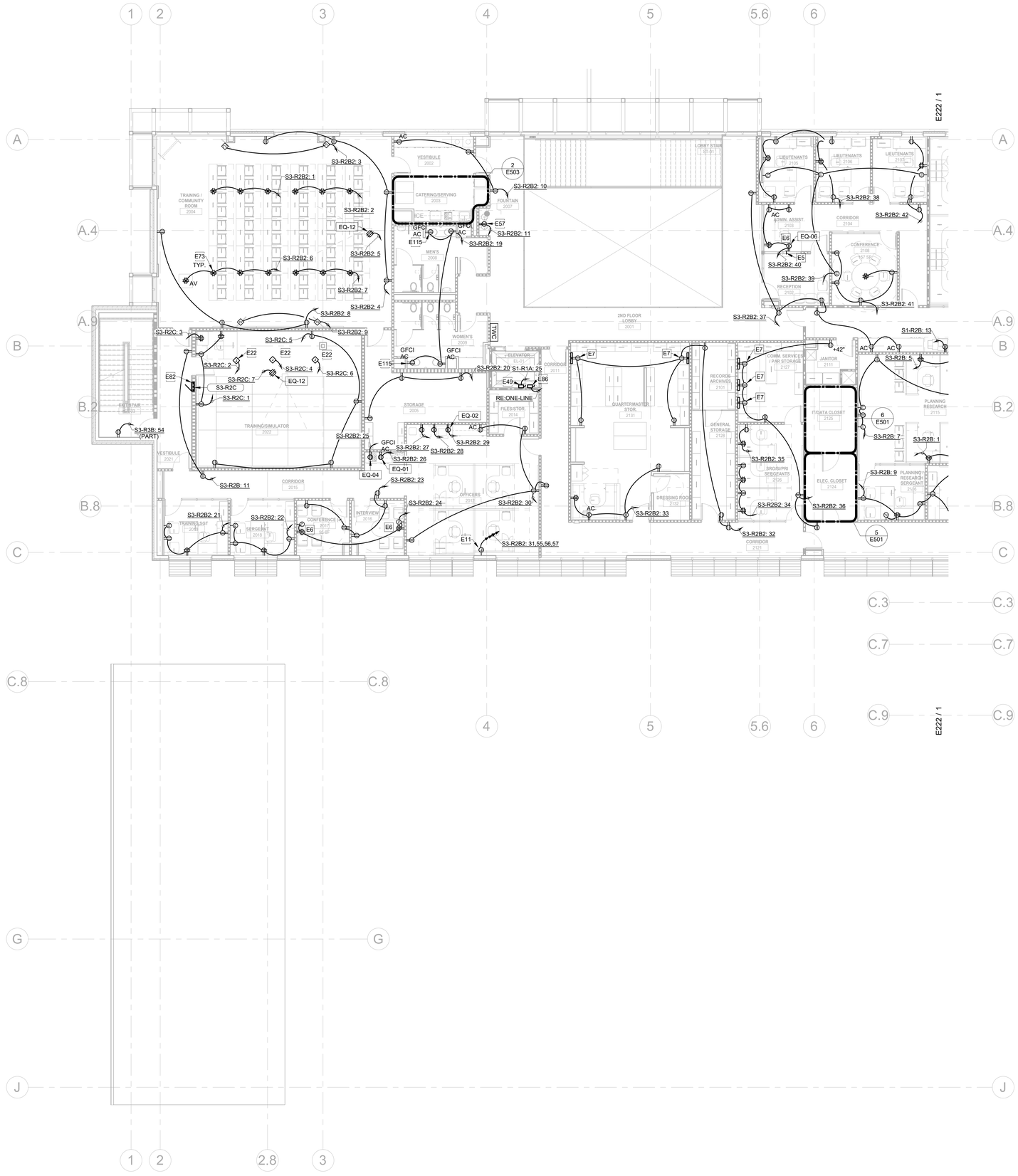

1 LEVEL 2 - ELECTRICAL PLAN - WEST
1/8" = 1'-0"

GENERAL NOTES:

1. ELECTRICAL CONTRACTOR SHALL COORDINATE EXACT LOCATION OF ALL MECHANICAL UNITS WITH MECHANICAL CONTRACTOR.

2. ALL EXPOSED CONDUIT SHALL BE ROUTED PERPENDICULAR, PARALLEL, AND TIGHT TO COLUMNS AND BEAMS. ALL EXPOSED CONDUIT ROUTING SHALL BE COORDINATED WITH THE ARCHITECT PRIOR TO INSTALLATION AND INSTALLED IN A NEAT AND CONSISTENT MANNER. NO ADDITIONAL COST TO OWNER WILL BE ALLOWED FOR RELOCATING CONDUIT DUE TO THE LACK OF COORDINATION WITH ARCHITECT. ALL SURFACE MOUNTED CONDUIT WHERE EXPOSED TO PUBLIC AREAS SHALL BE PAINTED. PAINT COLOR TO BE DETERMINED BY THE ARCHITECT.

3. ALL BACK BOXES SHALL BE FLUSH MOUNTED UNLESS NOTED OTHERWISE. ALL VERTICAL SECTIONS OF CONDUIT SHALL BE CONCEALED. CONTRACTOR SHALL COORDINATE INSTALLATION OF CONDUIT AND BACK BOXES IN CONCRETE, MASONRY AND GYP. WALLS.

4. THIS CONTRACTOR SHALL REFER TO "M" AND "P" SERIES DRAWINGS FOR ALL MECHANICAL EQUIPMENT ELECTRICAL CONNECTIONS.

5. CIRCUITS TO ALL MECHANICAL EQUIPMENT SHALL BE DEDICATED UNLESS NOTED OTHERWISE.

6. WALL MOUNTED TV'S INSTALLATION TO NOT PROTRUDE MORE THAN 4" WHEN INSTALLED BETWEEN 27"-80" HIGH. REFER TO ARCHITECTURAL DRAWINGS FOR FINAL ELEVATIONS.

KEYNOTES

E5	PROVIDE (1) ¾" CONDUIT STUBBED THROUGH WALL FOR CONNECTION BETWEEN INTERCOM SPEAKER MICROPHONE SYSTEM. COORDINATE HEIGHT WITH ARCHITECT AT FURNITURE SUBMISSION.
E6	COORDINATE MOUNTING HEIGHT WITH ARCHITECT AT FURNITURE SUBMISSION.
E7	PROVIDE 4'-0" VERTICAL POWER STRIP WITH A DUPLEX EVERY 8'.
E11	8-WIRE FURNITURE FEED. PROVIDE TIE BREAKER FOR SHARED NEUTRAL CIRCUITS. PROVIDE FLOOR/WALL BOX WITH 4-CIRCUIT HOMERUN (WHIP). COORDINATE LOCATION WITH TECHNOLOGY FLOOR/WALL BOX. VERFIY LOCATION WITH ARCHITECT PRIOR TO ROUGH-IN. FURNITURE INSTALLER TO DISTRIBUTE CIRCUITS EVENLY AMONG CUBES AND PROVIDE DEDICATED RECEPTACLES AT LOCATIONS NOTED.
E22	PROVIDE POWER TO SIM SYSTEM. COORDINATE FINAL POWER REQUIREMENTS AND ALL NECESSARY CONNECTIONS NEEDED FOR COMPLETE SYSTEM WITH MANUFACTURER. ROUGH-IN LOCATION TO BE COORDINATED WITH ARCHITECT PRIOR TO ROUGH-IN. CIRCUIT FUTURE SIM CONNECTIONS TO SPARE BREAKERS IN PANEL S3-R2C.
E49	PROVIDE 30A/1P DISCONNECT FOR ELEVATOR CAB LIGHTING AND FAN. COORDINATE LOCATION OF DISCONNECTS WITH ELEVATOR INSTALLER PRIOR TO ROUGH-IN.
E57	COORDINATE LOCATION OF WATER COOLER RECEPTACLE WITH PLUMBING CONTRACTOR PRIOR TO ROUGH-IN.
E73	COORDINATE FLOORBOX LOCATIONS WITH ARCHITECT PRIOR TO ROUGH-IN.
E82	PROVIDE 60A PANEL RECESSED FOR SIMULATION ROOM POWER AND ALL INTENT FOR FUTURE POWER NEEDED. PROVIDE (5) SPARE 1" CONDUITS FROM PANEL TO ACCESSIBLE CEIING IN TRAINING SIMULATOR FOR FUTURE BRANCH CIRCUITS.
E86	PROVIDE COOPER BUSSMANN POWER MODULE ELEVATOR DISCONNECT OR APPROVED EQUAL. PROVIDE FIRE SAFETY INTERFACE RELAY FOR CONTROL BY FIRE ALARM. COORDINATE LOCATION WITH ELEVATOR INSTALLER PRIOR TO ROUGH-IN.
E115	COORDINATE RECEPTACLE PLACEMENT ABOVE COUNTER WITH ILLUMINATED SIDE WALLS. GFCI TO BE INSTALLED BELOW LIGHTING. REFER TO E421 LIGHTING SERIES FOR SECTION VIEW.

BRINKLEY SARGENT WIGGINTON ARCHITECTS

Architect: Brinkley Sargent Wigginton Architects (972) 960-9970
Landscape: Kendall Landscape Architecture (214) 739-3226
Structural: L.A. Fuess Partners, Inc (214) 593-1118
MEP: M-E Engineers (214) 741-1589
Civil: KSA Engineers, Inc (903) 236-7700
Technology: M-E Engineers (303) 421-6656

LONGVIEW POLICE DEPARTMENT

518 W. SOUTH ST. LONGVIEW, TEXAS 75601

History		
#	Date	Description

TEXAS REGISTERED ANDREW SHIVLEY 109010 LICENSED PROFESSIONAL ENGINEER
ME Engineers, Inc.
F-10231
08/19/2020

LEVEL 2 - ELECTRICAL PLAN - WEST

BID ISSUE

20513
08/19/2020
E221

8/17/2020 12:17:26 PM

C:\Revit Projects\2019\LPD_CENTRAL_E19_Series.RVT\E221.rvt

© 2020 Brinkley Sargent Wigginton Architects, Inc.

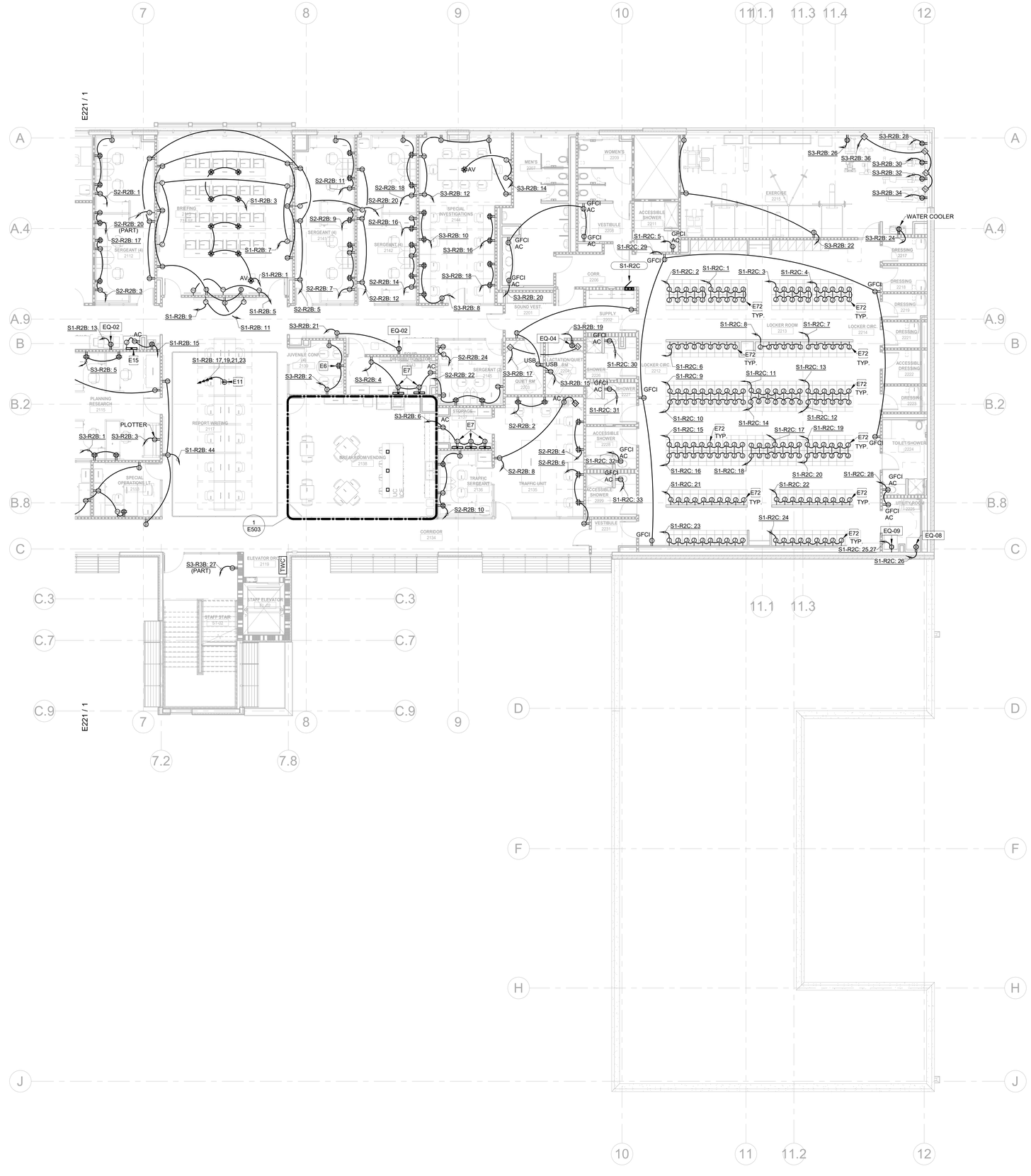

1 LEVEL 2 - ELECTRICAL PLAN - EAST
1/8" = 1'-0"

GENERAL NOTES:

1. ELECTRICAL CONTRACTOR SHALL COORDINATE EXACT LOCATION OF ALL MECHANICAL UNITS WITH MECHANICAL CONTRACTOR.

2. ALL EXPOSED CONDUIT SHALL BE ROUTED PERPENDICULAR, PARALLEL, AND TIGHT TO COLUMNS AND BEAMS. ALL EXPOSED CONDUIT ROUTING SHALL BE COORDINATED WITH THE ARCHITECT PRIOR TO INSTALLATION AND INSTALLED IN A NEAT AND CONSISTENT MANNER. NO ADDITIONAL COST TO OWNER WILL BE ALLOWED FOR RELOCATING CONDUIT DUE TO THE LACK OF COORDINATION WITH ARCHITECT. ALL SURFACE MOUNTED CONDUIT WHERE EXPOSED TO PUBLIC AREAS SHALL BE PAINTED. PAINT COLOR TO BE DETERMINED BY THE ARCHITECT.

3. ALL BACK BOXES SHALL BE FLUSH MOUNTED UNLESS NOTED OTHERWISE. ALL VERTICAL SECTIONS OF CONDUIT SHALL BE CONCEALED. CONTRACTOR SHALL COORDINATE INSTALLATION OF CONDUIT AND BACK BOXES IN CONCRETE, MASONRY AND GYP. WALLS.

4. THIS CONTRACTOR SHALL REFER TO "M" AND "P" SERIES DRAWINGS FOR ALL MECHANICAL EQUIPMENT ELECTRICAL CONNECTIONS.

5. CIRCUITS TO ALL MECHANICAL EQUIPMENT SHALL BE DEDICATED UNLESS NOTED OTHERWISE.

6. WALL MOUNTED TVS INSTALLATION TO NOT PROTRUDE MORE THAN 4" WHEN INSTALLED BETWEEN 27"-80" HIGH. REFER TO ARCHITECTURAL DRAWINGS FOR FINAL ELEVATIONS.

KEYNOTES

E6	COORDINATE MOUNTING HEIGHT WITH ARCHITECT AT FURNITURE SUBMISSION.
E7	PROVIDE 4'-0" VERTICAL POWER STRIP WITH A DUPLEX EVERY 8'.
E11	8-WIRE FURNITURE FEED. PROVIDE TIE BREAKER FOR SHARED NEUTRAL CIRCUITS. PROVIDE FLOOR/WALL BOX WITH 4-CIRCUIT HOMERUN (WHIP). COORDINATE LOCATION WITH TECHNOLOGY FLOORWALL BOX. VERFIY LOCATION WITH ARCHITECT PRIOR TO ROUGH-IN. FURNITURE INSTALLER TO DISTRIBUTE CIRCUITS EVENLY AMONG CUBES AND PROVIDE DEDICATED RECEPTACLES AT LOCATIONS NOTED.
E15	PROVIDE LEGRAND SERIES DS4000 WIREMOLD OR APPROVED EQUAL. PROVIDE LENGTH PER PLAN AND MOUNT AT 48" AFF. COORDINATE ADDITIONAL DATA DEVICES WITH DIVISION 27 PRIOR TO PURCHASE AND ROUGH-IN.
E72	PROVIDE 120V/20A CONNECTION TO EACH LOCKER FOR LOCKER POWER. COORDINATE LOCATION OF BACKBOX WITH LOCKER MANUFACTURER PRIOR TO ROUGH-IN.

BRINKLEY SARGENT WIGINTON ARCHITECTS

Architect: Brinkley Sargent Wigginton Architects (972) 960-9970
Landscape: Kendall Landscape Architecture (214) 739-3226
Structural: L.A. Fuess Partners, Inc (214) 593-1118
MEP: M-E Engineers (214) 741-1589
Civil: KSA Engineers, Inc (903) 236-7700
Technology: M-E Engineers (303) 421-6656

LONGVIEW POLICE DEPARTMENT

518 W. SOUTH ST. LONGVIEW, TEXAS 75601

History		
#	Date	Description

STATE OF TEXAS
ANDREW SHIVLEY
109010
LICENSED
PROFESSIONAL ENGINEER
ME Engineers, Inc.
F-10231
08/19/2020

LEVEL 2 - ELECTRICAL PLAN - EAST

BID ISSUE

20513
08/19/2020
E222

8/17/2020 12:17:33 PM

C:\Revit Projects\2015\LPD_CENTRAL_E19_Series.Wrnd\PSLE.rvt

© 2020 Brinkley Sargent Wigginton Architects, Inc.

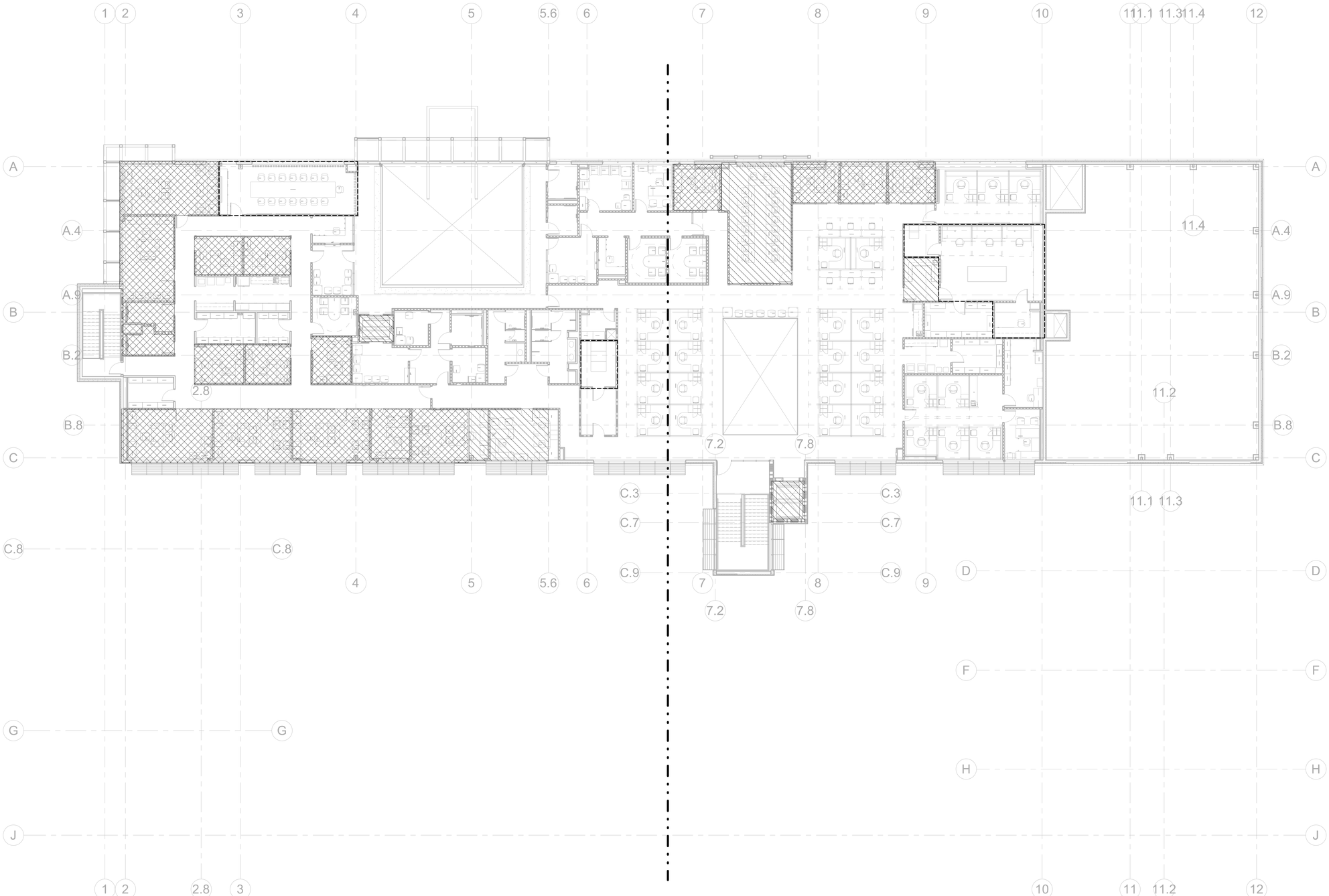

1 LEVEL 3 - ELECTRICAL OVERALL PLAN
3/32" = 1'-0"

GENERAL NOTES:

1. ELECTRICAL CONTRACTOR SHALL COORDINATE EXACT LOCATION OF ALL MECHANICAL UNITS WITH MECHANICAL CONTRACTOR.

2. ALL EXPOSED CONDUIT SHALL BE ROUTED PERPENDICULAR, PARALLEL, AND TIGHT TO COLUMNS AND BEAMS. ALL EXPOSED CONDUIT ROUTING SHALL BE COORDINATED WITH THE ARCHITECT PRIOR TO INSTALLATION AND INSTALLED IN A NEAT AND CONSISTENT MANNER. NO ADDITIONAL COST TO OWNER WILL BE ALLOWED FOR RELOCATING CONDUIT DUE TO THE LACK OF COORDINATION WITH ARCHITECT. ALL SURFACE MOUNTED CONDUIT WHERE EXPOSED TO PUBLIC AREAS SHALL BE PAINTED. PAINT COLOR TO BE DETERMINED BY THE ARCHITECT.

3. ALL BACK BOXES SHALL BE FLUSH MOUNTED UNLESS NOTED OTHERWISE. ALL VERTICAL SECTIONS OF CONDUIT SHALL BE CONCEALED. CONTRACTOR SHALL COORDINATE INSTALLATION OF CONDUIT AND BACK BOXES IN CONCRETE, MASONRY AND GYP. WALLS.

4. THIS CONTRACTOR SHALL REFER TO "M" AND "P" SERIES DRAWINGS FOR ALL MECHANICAL EQUIPMENT ELECTRICAL CONNECTIONS.

5. CIRCUITS TO ALL MECHANICAL EQUIPMENT SHALL BE DEDICATED UNLESS NOTED OTHERWISE.

6. WALL MOUNTED TVS INSTALLATION TO NOT PROTRUDE MORE THAN 4" WHEN INSTALLED BETWEEN 27"-80" HIGH. REFER TO ARCHITECTURAL DRAWINGS FOR FINAL ELEVATIONS.

KEYNOTES

EMERGENCY POWER LEGEND

- PRIORITY 1
- PRIORITY 2
- PRIORITY 3
- UPS POWER

NOTE: REFER TO ONE-LINE FOR ATS SCHEDULE

BRINKLEY SARGENT WIGINTON ARCHITECTS

Architect: Brinkley Sargent Wigginton Architects (972) 960-9970
Landscape: Kendall Landscape Architecture (214) 739-3226
Structural: L.A. Fuess Partners, Inc (214) 593-1118
MEP: M-E Engineers (214) 741-1589
Civil: KSA Engineers, Inc (903) 236-7700
Technology: M-E Engineers (303) 421-6656

LONGVIEW POLICE DEPARTMENT

518 W. SOUTH ST. LONGVIEW, TEXAS 75601

History		
#	Date	Description

ANDREW SHIVLEY
109010
LICENSED
PROFESSIONAL ENGINEER
ME Engineers, Inc.
F-10231
08/19/2020

LEVEL 3 - ELECTRICAL OVERALL PLAN

20513
08/19/2020
E230

BID ISSUE

8/17/2020 9:42:53 AM

C:\Revit Projects\2019\LRL_CENTRAL_ETS_Revit-MEP\E.rvt

© 2020 Brinkley Sargent Wigginton Architects, Inc.

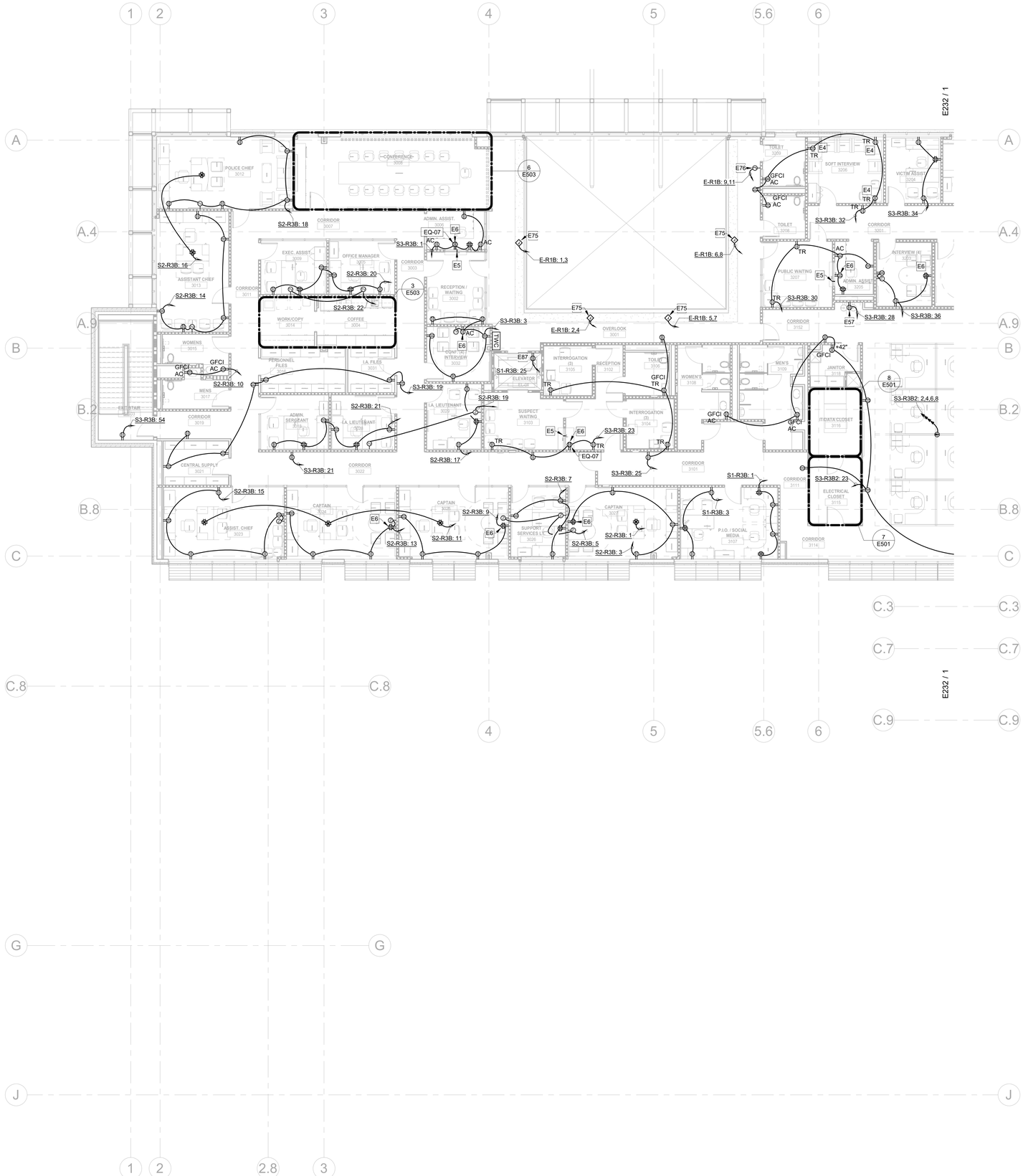

1 LEVEL 3 - ELECTRICAL PLAN - WEST
1/8" = 1'-0"

GENERAL NOTES:

1. ELECTRICAL CONTRACTOR SHALL COORDINATE EXACT LOCATION OF ALL MECHANICAL UNITS WITH MECHANICAL CONTRACTOR.

2. ALL EXPOSED CONDUIT SHALL BE ROUTED PERPENDICULAR, PARALLEL, AND TIGHT TO COLUMNS AND BEAMS. ALL EXPOSED CONDUIT ROUTING SHALL BE COORDINATED WITH THE ARCHITECT PRIOR TO INSTALLATION AND INSTALLED IN A NEAT AND CONSISTENT MANNER. NO ADDITIONAL COST TO OWNER WILL BE ALLOWED FOR RELOCATING CONDUIT DUE TO THE LACK OF COORDINATION WITH ARCHITECT. ALL SURFACE MOUNTED CONDUIT WHERE EXPOSED TO PUBLIC AREAS SHALL BE PAINTED. PAINT COLOR TO BE DETERMINED BY THE ARCHITECT.

3. ALL BACK BOXES SHALL BE FLUSH MOUNTED UNLESS NOTED OTHERWISE. ALL VERTICAL SECTIONS OF CONDUIT SHALL BE CONCEALED. CONTRACTOR SHALL COORDINATE INSTALLATION OF CONDUIT AND BACK BOXES IN CONCRETE, MASONRY AND GYP. WALLS.

4. THIS CONTRACTOR SHALL REFER TO "M" AND "P" SERIES DRAWINGS FOR ALL MECHANICAL EQUIPMENT ELECTRICAL CONNECTIONS.

5. CIRCUITS TO ALL MECHANICAL EQUIPMENT SHALL BE DEDICATED UNLESS NOTED OTHERWISE.

6. WALL MOUNTED TV'S INSTALLATION TO NOT PROTRUDE MORE THAN 4" WHEN INSTALLED BETWEEN 27"-80" HIGH. REFER TO ARCHITECTURAL DRAWINGS FOR FINAL ELEVATIONS.

KEYNOTES

E4	PROVIDE TAMPER RESISTANT, HALF-CONTROLLED PLUG LOAD DUPLEX RECEPTACLE FOR LAMP WITH PERMANENT MARKING INDICATED CONTROLLED SIDE. LEGRAND TR2636CH OR APPROVED EQUAL. ARCHITECT TO SELECT COLOR. COORDINATE LOCATION WITH FINAL FURNITURE LAYOUT PRIOR TO ROUGH-IN.
E5	PROVIDE (1) ¾" CONDUIT STUBBED THROUGH WALL FOR CONNECTION BETWEEN INTERCOM SPEAKER MICROPHONE SYSTEM. COORDINATE HEIGHT WITH ARCHITECT AT FURNITURE SUBMISSION.
E6	COORDINATE MOUNTING HEIGHT WITH ARCHITECT AT FURNITURE SUBMISSION.
E57	COORDINATE LOCATION OF WATER COOLER RECEPTACLE WITH PLUMBING CONTRACTOR PRIOR TO ROUGH-IN.
E75	PROVIDE 208V CONNECTION AND ALL CONTROL WIRING TO MAIN CONTROLLER FOR FIRE/SMOKE CURTAIN. COORDINATE POWER LOCATIONS AND CONNECTIONS WITH SUBMITTED MANUFACTURER PRIOR TO ROUGH-IN.
E76	PROVIDE 208V CONNECTION TO RZ-7 MAIN CONTROLLER FOR FIRE/SMOKE CURTAIN SYSTEM. CONTROLLER TO NOT BE LOCATED MORE THAT 100FT FROM SYSTEM. COORDINATE POWER LOCATION AND CONNECTIONS WITH ARCHITECT AND SUBMITTED MANUFACTURER.
E87	PROVIDE DEDICATED 120V, 20A/1PH CIRCUIT FOR TOP OF ELEVATOR SHAFT RECEPTACLE AND LIGHTING. REQUIRED LIGHTING SHALL NOT BE CONNECTED TO THE LOAD SIDE OF THE GFCI.

BRINKLEY SARGENT WIGINTON ARCHITECTS

Architect: Brinkley Sargent Wigginton Architects (972) 960-9970
Landscape: Kendall Landscape Architecture (214) 739-3226
Structural: L.A. Fuess Partners, Inc (214) 593-1118
MEP: M-E Engineers (214) 741-1589
Civil: KSA Engineers, Inc (903) 236-7700
Technology: M-E Engineers (303) 421-6656

LONGVIEW POLICE DEPARTMENT

518 W. SOUTH ST. LONGVIEW, TEXAS 75601

History		
#	Date	Description

STATE OF TEXAS
ANDREW SHIVLEY
109010
LICENSED
PROFESSIONAL ENGINEER
ME Engineers, Inc.
F-10231
08/19/2020

LEVEL 3 - ELECTRICAL PLAN - WEST

BID ISSUE

20513
08/19/2020
E231

8/17/2020 12:17:39 PM

C:\Revit Projects\2018\LPD_CENTRAL_EYB_Demo.Revit\PDI.rvt

© 2020 Brinkley Sargent Wigginton Architects, Inc.

1 LEVEL 3 - ELECTRICAL PLAN - EAST
1/8" = 1'-0"

GENERAL NOTES:

1. ELECTRICAL CONTRACTOR SHALL COORDINATE EXACT LOCATION OF ALL MECHANICAL UNITS WITH MECHANICAL CONTRACTOR.

2. ALL EXPOSED CONDUIT SHALL BE ROUTED PERPENDICULAR, PARALLEL, AND TIGHT TO COLUMNS AND BEAMS. ALL EXPOSED CONDUIT ROUTING SHALL BE COORDINATED WITH THE ARCHITECT PRIOR TO INSTALLATION AND INSTALLED IN A NEAT AND CONSISTENT MANNER. NO ADDITIONAL COST TO OWNER WILL BE ALLOWED FOR RELOCATING CONDUIT DUE TO THE LACK OF COORDINATION WITH ARCHITECT. ALL SURFACE MOUNTED CONDUIT WHERE EXPOSED TO PUBLIC AREAS SHALL BE PAINTED. PAINT COLOR TO BE DETERMINED BY THE ARCHITECT.

3. ALL BACK BOXES SHALL BE FLUSH MOUNTED UNLESS NOTED OTHERWISE. ALL VERTICAL SECTIONS OF CONDUIT SHALL BE CONCEALED. CONTRACTOR SHALL COORDINATE INSTALLATION OF CONDUIT AND BACK BOXES IN CONCRETE, MASONRY AND GYP. WALLS.

4. THIS CONTRACTOR SHALL REFER TO "M" AND "P" SERIES DRAWINGS FOR ALL MECHANICAL EQUIPMENT ELECTRICAL CONNECTIONS.

5. CIRCUITS TO ALL MECHANICAL EQUIPMENT SHALL BE DEDICATED UNLESS NOTED OTHERWISE.

6. WALL MOUNTED TV'S INSTALLATION TO NOT PROTRUDE MORE THAN 4" WHEN INSTALLED BETWEEN 27"-80" HIGH. REFER TO ARCHITECTURAL DRAWINGS FOR FINAL ELEVATIONS.

KEYNOTES

E6	COORDINATE MOUNTING HEIGHT WITH ARCHITECT AT FURNITURE SUBMISSION.
E7	PROVIDE 4'-0" VERTICAL POWER STRIP WITH A DUPLEX EVERY 8".
E8	PROVIDE 120V POWER TO MOTORIZED SHADES. PROVIDE ALL CONDUIT, WIRE, AND CONTROLS NECESSARY FOR OPERATION. ASSUME SHADES ARE CONTROLLED VIA LIGHTING CONTROL DEVICE IN SPACE. COORDINATE WITH ARCHITECT FOR NUMBER OF MOTORIZED SHADE CONNECTION POINTS.
E11	8-WIRE FURNITURE FEED. PROVIDE TIE BREAKER FOR SHARED NEUTRAL CIRCUITS. PROVIDE FLOOR/WALL BOX WITH 4-CIRCUIT HOMERUN (WHIP). COORDINATE LOCATION WITH TECHNOLOGY FLOOR/WALL BOX. VERFIY LOCATION WITH ARCHITECT PRIOR TO ROUGH-IN. FURNITURE INSTALLER TO DISTRIBUTE CIRCUITS EVENLY AMONG CUBES AND PROVIDE DEDICATED RECEPTACLES AT LOCATIONS NOTED.
E15	PROVIDE LEGRAND SERIES DS4000 WIREMOLD OR APPROVED EQUAL. PROVIDE LENGTH PER PLAN AND MOUNT AT 48" AFF. COORDINATE ADDITIONAL DATA DEVICES WITH DIVISION 27 PRIOR TO PURCHASE AND ROUGH-IN.
E33	RECESSED FLOORBOX FOR POWER TO ISLAND. COORDINATE LOCATION WITH ARCHITECT AND MILLWORK PROVIDER DURING CONSTRUCTION ROUGH-IN PROCESS TO ALIGN WITH MILLWORK POWER ENTRANCE WINDOWS.
E40	SOLDER WORKSTATION ROOM TO HAVE FARADAY SHIELDING IN WALLS. COORDINATE ROOM REQUIREMENTS WITH ARCHITECT PRIOR TO ELECTRICAL ROUGH-IN.
E50	PROVIDE TABLETOP MOUNTED RECEPTACLE. CONTRACTOR IS TO COORDINATE WITH MILLWORK INSTALLER TO PROVIDE CABLING AND RECEPTACLES WITHIN MILLWORK.

BRINKLEY SARGENT WIGINTON ARCHITECTS

Architect: Brinkley Sargent Wigginton Architects (972) 960-9970
Landscape: Kendall Landscape Architecture (214) 739-3226
Structural: L.A. Fuess Partners, Inc (214) 593-1118
MEP: M-E Engineers (214) 741-1589
Civil: KSA Engineers, Inc (903) 236-7700
Technology: M-E Engineers (303) 421-6656

LONGVIEW POLICE DEPARTMENT

518 W. SOUTH ST. LONGVIEW, TEXAS 75601

History		
#	Date	Description

TEXAS REGISTERED ANDREW SHIVLEY 109010 LICENSED PROFESSIONAL ENGINEER
ME Engineers, Inc.
F-10231
08/19/2020

LEVEL 3 - ELECTRICAL PLAN - EAST

20513
08/19/2020

E232

BID ISSUE

C:\Revit Projects\2015\JRL_CENTRAL_E19_Drew.Shively3PM.rvt
8/17/2020 9:49:44 AM

© 2020 Brinkley Sargent Wigginton Architects, Inc.

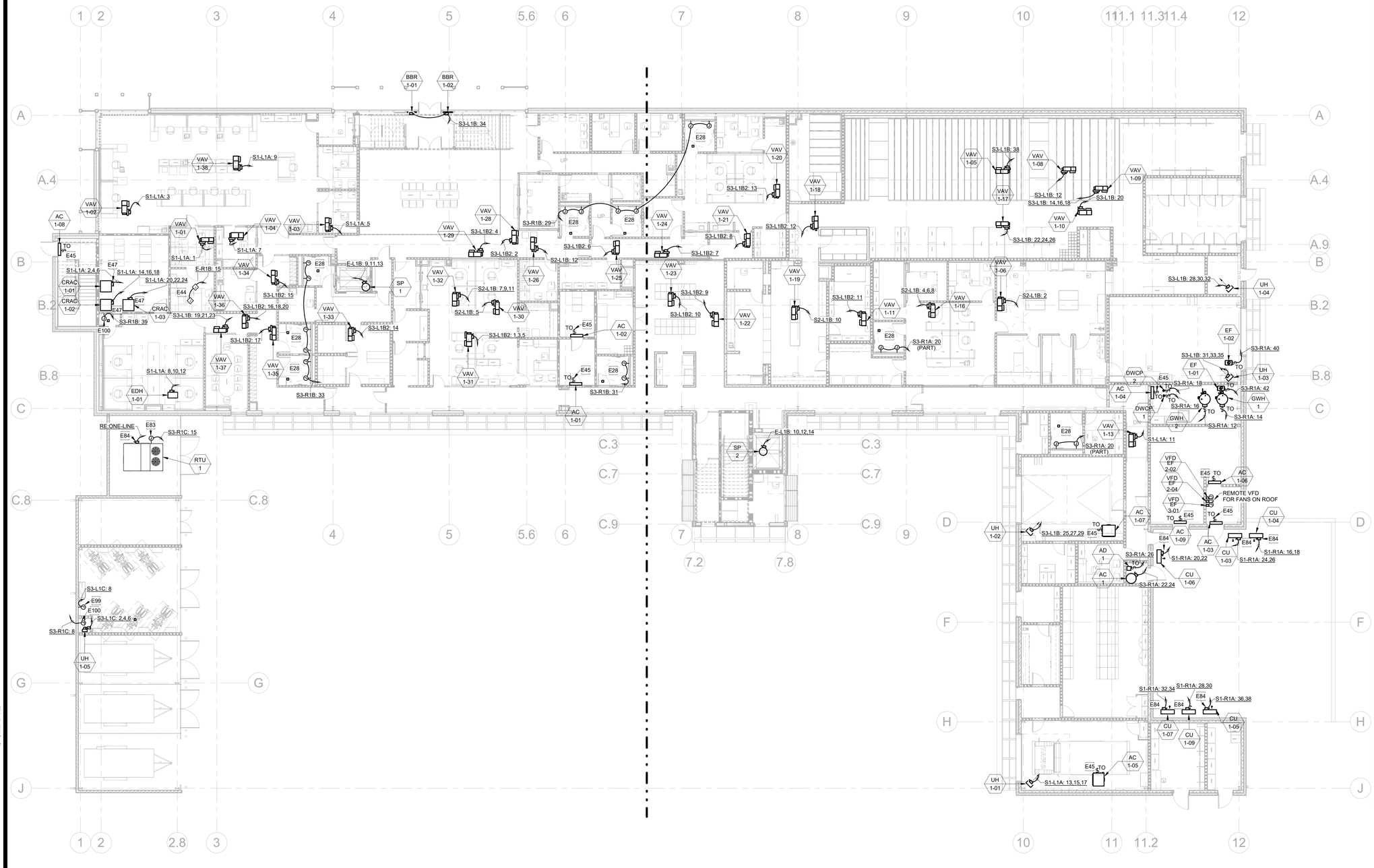

1 LEVEL 1 - MECH POWER OVERALL PLAN
3/32" = 1'-0"

GENERAL NOTES:

1. ELECTRICAL CONTRACTOR SHALL COORDINATE EXACT LOCATION OF ALL MECHANICAL AND PLUMBING UNITS WITH MECHANICAL AND PLUMBING CONTRACTORS. REFER TO "MEP" SERIES DRAWINGS FOR ALL MECHANICAL AND PLUMBING EQUIPMENT ELECTRICAL CONNECTIONS.

2. ALL EXPOSED CONDUIT SHALL BE ROUTED PERPENDICULAR, PARALLEL, AND TIGHT TO COLUMNS AND BEAMS. ALL EXPOSED CONDUIT ROUTING SHALL BE COORDINATED WITH ENGINEER AND ARCHITECT PRIOR TO INSTALLATION. NO ADDITIONAL COST TO OWNER WILL BE ALLOWED FOR RELOCATING CONDUIT DUE TO THE LACK OF COORDINATION WITH ARCHITECT.

3. ALL BACK BOXES SHALL BE FLUSH MOUNTED UNLESS NOTED OTHERWISE. ALL VERTICAL SECTIONS OF CONDUIT SHALL BE CONCEALED. CONTRACTOR SHALL COORDINATE INSTALLATION OF CONDUIT AND BACK BOXES IN CONCRETE, MASONRY AND GYP. WALLS.

4. CIRCUIT TO ALL MECHANICAL EQUIPMENT SHALL BE DEDICATED UNLESS NOTED OTHERWISE.

5. ELECTRICAL CONTRACTOR SHALL COORDINATE EXACT LOCATION OF ALL AV, SECURITY, AND IT UNITS WITH LOW VOLTAGE CONTRACTOR. REFER TO "AV" AND "T" SERIES DRAWINGS FOR ALL NECESSARY EQUIPMENT ELECTRICAL CONNECTIONS.

6. FOR PRICING PURPOSES PROVIDE A MAXIMUM OF (5) DUPLEX RECEPTACLES PER CIRCUIT.

7. PROVIDE 120V/20A DUPLEX RECEPTACLE FOR EACH TELEVISION LOCATION. REFER TO ARCHITECTURAL DRAWINGS FOR EXACT LOCATIONS. MAXIMUM OF (4) TELEVISIONS PER CIRCUIT. ROUTE ALL TELEVISION CIRCUITS THROUGH LIGHTING CONTROL SYSTEM.

8. CALCULATE 120V BRANCH CIRCUITS AS FOLLOWS:
   a. PROVIDE A DEDICATED CIRCUIT FOR ALL EQUIPMENT INDICATED ON ARCHITECTURAL DRAWINGS,INCLUDING REFRIGERATORS, VENDING MACHINES, COPIERS, ETC.
   b. 25% OF ALL 120V NEMA 5-20R RECEPTACLES SHALL BE ON DEDICATED CIRCUITS.

9. PROVIDE (1) DEDICATED 120V/20A CIRCUIT FOR ALL CONTROL PANELS AND BMS/DDC PANELS.

10. PROVIDE GROUNDING/BONDING PER NEC ARTICLE 680.

11. ALL 125V, 20A RECEPTACLES WITHIN 6' OF A SINK SHALL HAVE GFCI PROTECTION.

12. COORDINATE INSTALLATION OF DISCONNECTS WITH OTHER ELEMENTS TO MEET NEC CLEARANCES.

13. PROVIDE 120V/20A CONNECTION FOR MECHANICAL DAMPER POWER. COORDINATE WITH MECHANICAL DRAWINGS & DIVISION 23 FOR LOCATIONS.

14. PROVIDE 120V/20A CIRCUIT FROM EMERGENCY SYSTEM FOR FIRE SMOKE DAMPERS, COORDINATE EXACT LOCATIONS WITH DIVISION 23 AND FIRE ALARM INSTALLER.

KEYNOTES

E28	PROVIDE 120V CONNECTION TO FAUCET, HAND DRYER, FLUSH VALVES, SOAP DISPENSORS IN RESTROOM. COORDINATE RECEPTACLES AND HARD-WIRED CONNECTIONS WITH PLUMBING CONTRACTOR PRIOR TO ROUGH-IN.
E44	POWER CIRCUIT FOR FIRE SMOKE DAMPERS. COORDINATE WITH DIVISION 23 FOR FINAL SIZING AND CONNECTION LOCATION
E45	INDOOR SPLIT SYSTEM UNIT IS TO BE FED FROM OUTDOOR UNIT. COORDINATE WITH DIVISION 23.
E47	PROVIDE ELECTRICAL CONNECTION TO CORRESPONDING EXTERIOR CONDENSING UNIT.
E83	PROVIDE 120V/20A CONNECTION FOR MECHANICAL CONTROL POWER.
E84	PROVIDE NEMA 3R RATED DISCONNECT.
E99	PROVIDE DEDICATED 277/20A CIRCUIT FOR HEAT TRACE. COORDINATE LOCATION AND PROVISIONS WITH DIVISION 22&23 PRIOR TO ROUGH-IN.
E100	PROVIDE DEDICATED 120V/20A CIRCUIT FOR PREACTION FIRE PROTECTION SYSTEM. COORDINATE AND PROVIDE WIRE, CONDUIT AND NECESSARY EQUIPMENT FOR PROPER OPERATION WITH DIVISION 21.

BRINKLEY SARGENT WIGINTON ARCHITECTS

Architect: Brinkley Sargent Wigginton Architects (972) 960-9970
Landscape: Kendall Landscape Architecture (214) 739-3226
Structural: L.A. Fuess Partners, Inc (214) 593-1118
MEP: M-E Engineers (214) 741-1589
Civil: KSA Engineers, Inc (903) 236-7700
Technology: M-E Engineers (303) 421-6656

LONGVIEW POLICE DEPARTMENT

518 W. SOUTH ST. LONGVIEW, TEXAS 75601

History		
#	Date	Description

ANDREW SHIVLEY
109010
LICENSED PROFESSIONAL ENGINEER
ME Engineers, Inc.
F-10231
08/19/2020

LEVEL 1 - MECH POWER OVERALL PLAN

20513
08/19/2020

E310

BID ISSUE

8/17/2020 9:49:52 AM

C:\Revit Projects\20513\LPD_CENTRAL_ELB_Demo.Revit\E310.rvt

© 2020 Brinkley Sargent Wigginton Architects, Inc.

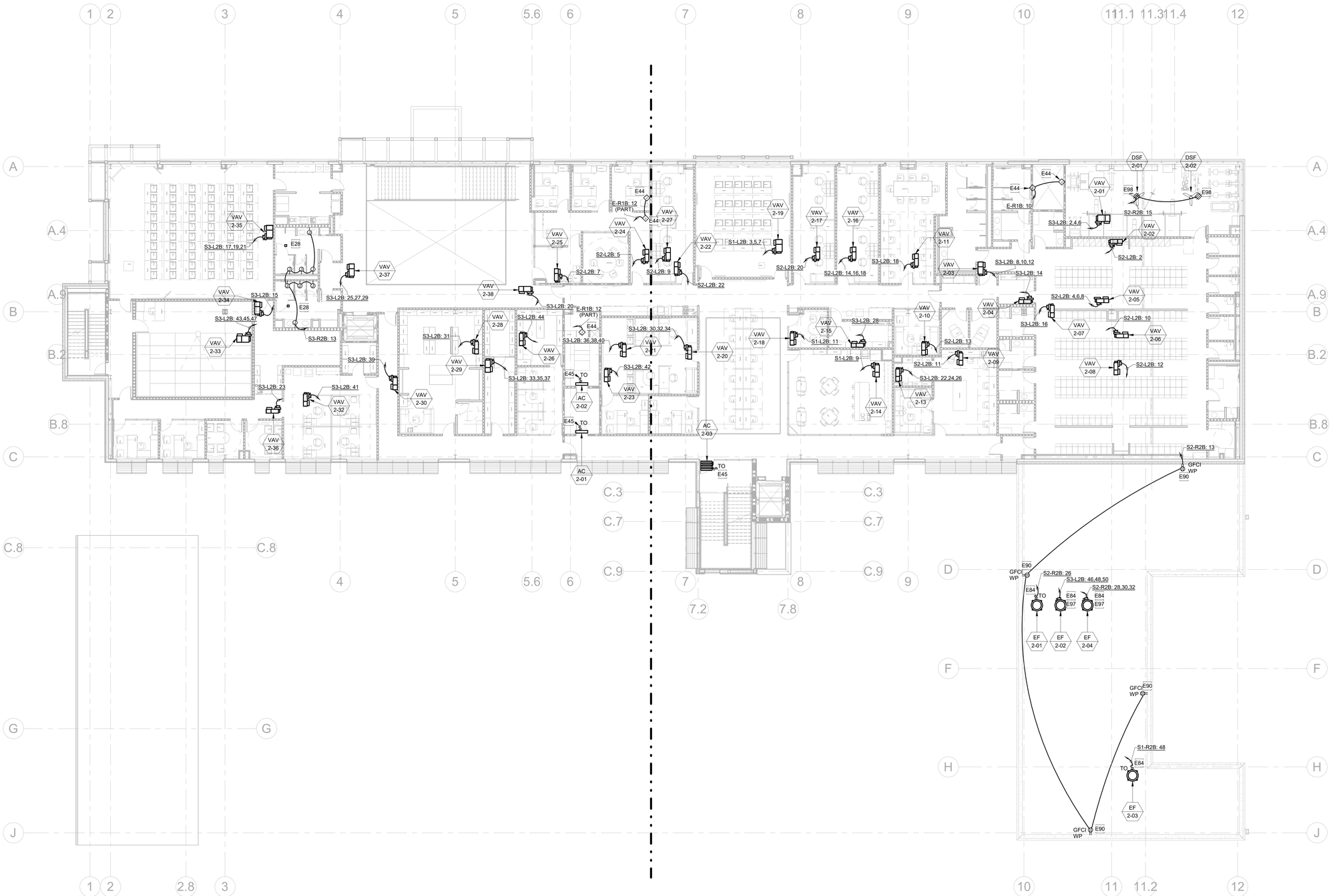

1 LEVEL 2 - MECH POWER OVERALL PLAN
3/32" = 1'-0"

GENERAL NOTES:

1. ELECTRICAL CONTRACTOR SHALL COORDINATE EXACT LOCATION OF ALL MECHANICAL AND PLUMBING UNITS WITH MECHANICAL AND PLUMBING CONTRACTORS. REFER TO "MEP" SERIES DRAWINGS FOR ALL MECHANICAL AND PLUMBING EQUIPMENT ELECTRICAL CONNECTIONS.

2. ALL EXPOSED CONDUIT SHALL BE ROUTED PERPENDICULAR, PARALLEL, AND TIGHT TO COLUMNS AND BEAMS. ALL EXPOSED CONDUIT ROUTING SHALL BE COORDINATED WITH ENGINEER AND ARCHITECT PRIOR TO INSTALLATION. NO ADDITIONAL COST TO OWNER WILL BE ALLOWED FOR RELOCATING CONDUIT DUE TO THE LACK OF COORDINATION WITH ARCHITECT.

3. ALL BACK BOXES SHALL BE FLUSH MOUNTED UNLESS NOTED OTHERWISE. ALL VERTICAL SECTIONS OF CONDUIT SHALL BE CONCEALED. CONTRACTOR SHALL COORDINATE INSTALLATION OF CONDUIT AND BACK BOXES IN CONCRETE, MASONRY AND GYP. WALLS.

4. CIRCUIT TO ALL MECHANICAL EQUIPMENT SHALL BE DEDICATED UNLESS NOTED OTHERWISE.

5. ELECTRICAL CONTRACTOR SHALL COORDINATE EXACT LOCATION OF ALL AV, SECURITY, AND IT UNITS WITH LOW VOLTAGE CONTRACTOR. REFER TO "AV" AND "T" SERIES DRAWINGS FOR ALL NECESSARY EQUIPMENT ELECTRICAL CONNECTIONS.

6. FOR PRICING PURPOSES PROVIDE A MAXIMUM OF (5) DUPLEX RECEPTACLES PER CIRCUIT.

7. PROVIDE 120V/20A DUPLEX RECEPTACLE FOR EACH TELEVISION LOCATION. REFER TO ARCHITECTURAL DRAWINGS FOR EXACT LOCATIONS. MAXIMUM OF (4) TELEVISIONS PER CIRCUIT. ROUTE ALL TELEVISION CIRCUITS THROUGH LIGHTING CONTROL SYSTEM.

8. CALCULATE 120V BRANCH CIRCUITS AS FOLLOWS:
a. PROVIDE A DEDICATED CIRCUIT FOR ALL EQUIPMENT INDICATED ON ARCHITECTURAL DRAWINGS,INCLUDING REFRIGERATORS, VENDING MACHINES, COPIERS, ETC.
b. 25% OF ALL 120V NEMA 5-20R RECEPTACLES SHALL BE ON DEDICATED CIRCUITS.

9. PROVIDE (1) DEDICATED 120V/20A CIRCUIT FOR ALL CONTROL PANELS AND BMS/DDC PANELS.

10. PROVIDE GROUNDING/BONDING PER NEC ARTICLE 680.

11. ALL 125V, 20A RECEPTACLES WITHIN 6' OF A SINK SHALL HAVE GFCI PROTECTION.

12. COORDINATE INSTALLATION OF DISCONNECTS WITH OTHER ELEMENTS TO MEET NEC CLEARANCES.

13. PROVIDE 120V/20A CONNECTION FOR MECHANICAL DAMPER POWER. COORDINATE WITH MECHANICAL DRAWINGS & DIVISION 23 FOR LOCATIONS.

14. PROVIDE 120V/20A CIRCUIT FROM EMERGENCY SYSTEM FOR FIRE SMOKE DAMPERS. COORDINATE EXACT LOCATIONS WITH DIVISION 23 AND FIRE ALARM INSTALLER.

KEYNOTES

E28	PROVIDE 120V CONNECTION TO FAUCET, HAND DRYER, FLUSH VALVES, SOAP DISPENSORS IN RESTROOM. COORDINATE RECEPTACLES AND HARD-WIRED CONNECTIONS WITH PLUMBING CONTRACTOR PRIOR TO ROUGH-IN.
E44	POWER CIRCUIT FOR FIRE SMOKE DAMPERS. COORDINATE WITH DIVISION 23 FOR FINAL SIZING AND CONNECTION LOCATION.
E45	INDOOR SPLIT SYSTEM UNIT IS TO BE FED FROM OUTDOOR UNIT. COORDINATE WITH DIVISION 23.
E84	PROVIDE NEMA 3R RATED DISCONNECT.
E90	ROUTE RECEPTACLE THROUGH LIGHTING CONTROL PANEL FOR TIMECLOCK CONTROL OF HOLIDAY LIGHTING.
E97	PROVIDE ELECTRICAL CONNECTION BETWEEN REMOTE MOUNTED VFD LOCATED IN BUILDING TO FAN DISCONNECT.
E98	COORDINATE ADDITIONAL PROVISIONS AND LOCATIONS OF CONTROLS FOR CEILING FANS IN SPACE WITH DIVISION 23 PRIOR TO ROUGH-IN.

Architect: Brinkley Sargent Wigginton Architects (972) 960-9970
Landscape: Kendall Landscape Architecture (214) 739-3226
Structural: L.A. Fuess Partners, Inc (214) 593-1118
MEP: M-E Engineers (214) 741-1589
Civil: KSA Engineers, Inc (903) 236-7700
Technology: M-E Engineers (303) 421-6656

BRINKLEY SARGENT WIGINTON ARCHITECTS

LONGVIEW POLICE DEPARTMENT

518 W. SOUTH ST. LONGVIEW, TEXAS 75601

History		
#	Date	Description

TEXAS REGISTERED ANDREW SHIVLEY 109010 LICENSED PROFESSIONAL ENGINEER

ME Engineers, Inc.
F-10231
08/19/2020

LEVEL 2 - MECH POWER OVERALL PLAN

BID ISSUE

20513
08/19/2020

E320

5/17/2020 9:49:55 AM

C:\Revit Projects\2015\LRL_CENTRAL_E19_Shiv-WithrsPNL.rvt

© 2020 Brinkley Sargent Wigginton Architects, Inc.

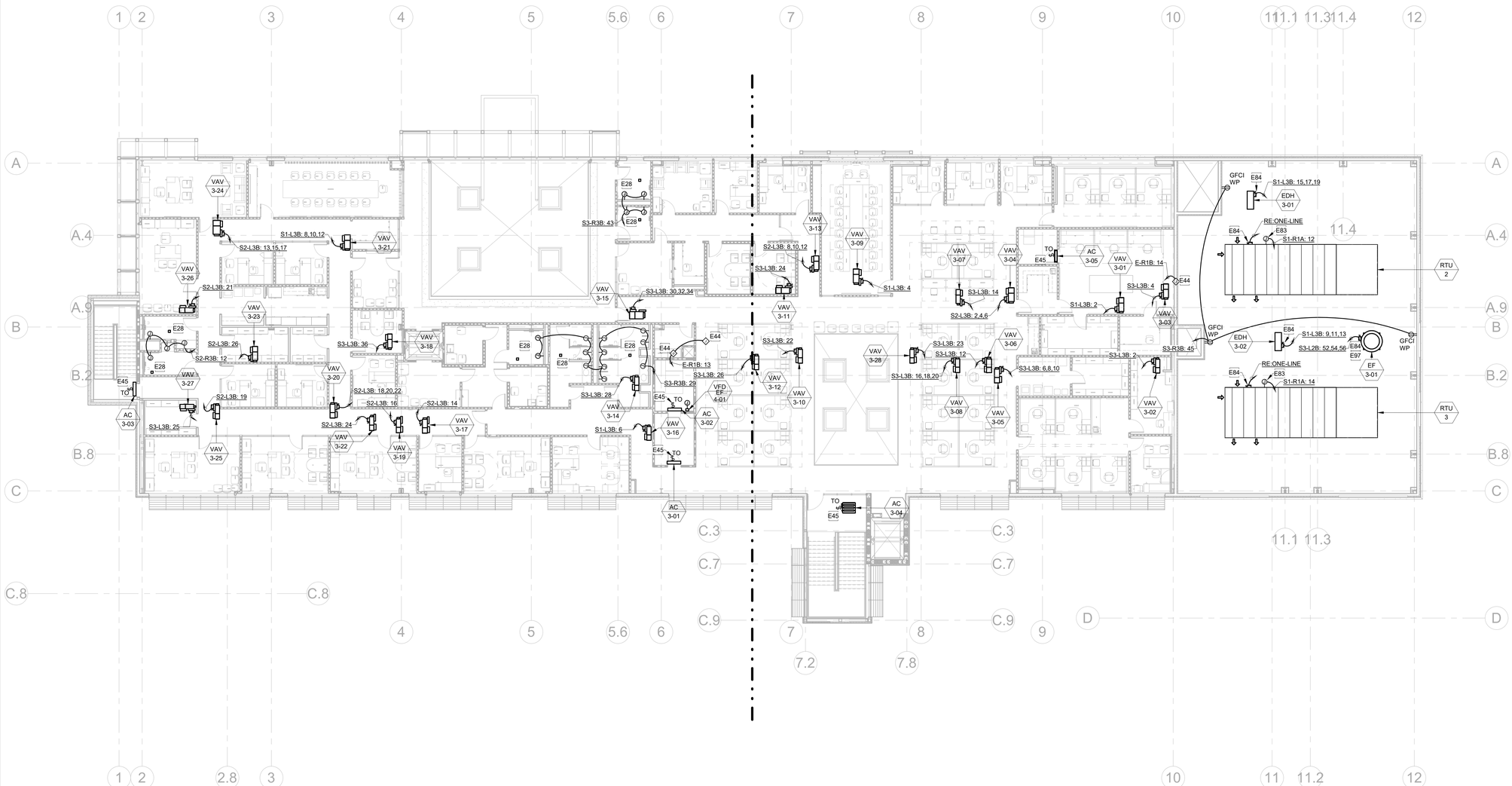

1 LEVEL 3 - MECH POWER OVERALL PLAN
3/32" = 1'-0"

GENERAL NOTES:

1. ELECTRICAL CONTRACTOR SHALL COORDINATE EXACT LOCATION OF ALL MECHANICAL AND PLUMBING UNITS WITH MECHANICAL AND PLUMBING CONTRACTORS. REFER TO "MEP" SERIES DRAWINGS FOR ALL MECHANICAL AND PLUMBING EQUIPMENT ELECTRICAL CONNECTIONS.

2. ALL EXPOSED CONDUIT SHALL BE ROUTED PERPENDICULAR, PARALLEL, AND TIGHT TO COLUMNS AND BEAMS. ALL EXPOSED CONDUIT ROUTING SHALL BE COORDINATED WITH ENGINEER AND ARCHITECT PRIOR TO INSTALLATION. NO ADDITIONAL COST TO OWNER WILL BE ALLOWED FOR RELOCATING CONDUIT DUE TO THE LACK OF COORDINATION WITH ARCHITECT.

3. ALL BACK BOXES SHALL BE FLUSH MOUNTED UNLESS NOTED OTHERWISE. ALL VERTICAL SECTIONS OF CONDUIT SHALL BE CONCEALED. CONTRACTOR SHALL COORDINATE INSTALLATION OF CONDUIT AND BACK BOXES IN CONCRETE, MASONRY AND GYP. WALLS.

4. CIRCUIT TO ALL MECHANICAL EQUIPMENT SHALL BE DEDICATED UNLESS NOTED OTHERWISE.

5. ELECTRICAL CONTRACTOR SHALL COORDINATE EXACT LOCATION OF ALL AV, SECURITY, AND IT UNITS WITH LOW VOLTAGE CONTRACTOR. REFER TO "AV" AND "T" SERIES DRAWINGS FOR ALL NECESSARY EQUIPMENT ELECTRICAL CONNECTIONS.

6. FOR PRICING PURPOSES PROVIDE A MAXIMUM OF (5) DUPLEX RECEPTACLES PER CIRCUIT.

7. PROVIDE 120V/20A DUPLEX RECEPTACLE FOR EACH TELEVISION LOCATION. REFER TO ARCHITECTURAL DRAWINGS FOR EXACT LOCATIONS. MAXIMUM OF (4) TELEVISIONS PER CIRCUIT. ROUTE ALL TELEVISION CIRCUITS THROUGH LIGHTING CONTROL SYSTEM.

8. CALCULATE 120V BRANCH CIRCUITS AS FOLLOWS:
a. PROVIDE A DEDICATED CIRCUIT FOR ALL EQUIPMENT INDICATED ON ARCHITECTURAL DRAWINGS,INCLUDING REFRIGERATORS, VENDING MACHINES, COPIERS, ETC.
b. 25% OF ALL 120V NEMA 5-20R RECEPTACLES SHALL BE ON DEDICATED CIRCUITS.

9. PROVIDE (1) DEDICATED 120V/20A CIRCUIT FOR ALL CONTROL PANELS AND BMS/DDC PANELS.

10. PROVIDE GROUNDING/BONDING PER NEC ARTICLE 680.

11. ALL 125V, 20A RECEPTACLES WITHIN 6' OF A SINK SHALL HAVE GFCI PROTECTION.

12. COORDINATE INSTALLATION OF DISCONNECTS WITH OTHER ELEMENTS TO MEET NEC CLEARANCES.

13. PROVIDE 120V/20A CONNECTION FOR MECHANICAL DAMPER POWER. COORDINATE WITH MECHANICAL DRAWINGS & DIVISION 23 FOR LOCATIONS.

14. PROVIDE 120V/20A CIRCUIT FROM EMERGENCY SYSTEM FOR FIRE SMOKE DAMPERS. COORDINATE EXACT LOCATIONS WITH DIVISION 23 AND FIRE ALARM INSTALLER.

KEYNOTES

E28	PROVIDE 120V CONNECTION TO FAUCET, HAND DRYER, FLUSH VALVES, SOAP DISPENSORS IN RESTROOM. COORDINATE RECEPTACLES AND HARD-WIRED CONNECTIONS WITH PLUMBING CONTRACTOR PRIOR TO ROUGH-IN.
E44	POWER CIRCUIT FOR FIRE SMOKE DAMPERS. COORDINATE WITH DIVISION 23 FOR FINAL SIZING AND CONNECTION LOCATION.
E45	INDOOR SPLIT SYSTEM UNIT IS TO BE FED FROM OUTDOOR UNIT. COORDINATE WITH DIVISION 23.
E83	PROVIDE 120V/20A CONNECTION FOR MECHANICAL CONTROL POWER.
E84	PROVIDE NEMA 3R RATED DISCONNECT.
E97	PROVIDE ELECTRICAL CONNECTION BETWEEN REMOTE MOUNTED VFD LOCATED IN BUILDING TO FAN DISCONNECT.

BRINKLEY SARGENT WIGINTON ARCHITECTS

Architect: Brinkley Sargent Wigginton Architects (972) 960-9970
Landscape: Kendall Landscape Architecture (214) 739-3226
Structural: L.A. Fuess Partners, Inc (214) 593-1118
MEP: M-E Engineers (214) 741-1589
Civil: KSA Engineers, Inc (903) 236-7700
Technology: M-E Engineers (303) 421-6656

LONGVIEW POLICE DEPARTMENT

518 W. SOUTH ST. LONGVIEW, TEXAS 75601

History		
#	Date	Description

STATE OF TEXAS
ANDREW SHIVLEY
109010
LICENSED
PROFESSIONAL ENGINEER
ME Engineers, Inc.
F-10231
08/19/2020

LEVEL 3 - MECH POWER OVERALL PLAN

BID ISSUE

20513
08/19/2020
E330

8/17/2020 9:50:03 AM

C:\Revit Projects\2019\UR_CENTRAL_ETS_Revit-WHSPE.rvt

© 2020 Brinkley Sargent Wigintion Architects, Inc.

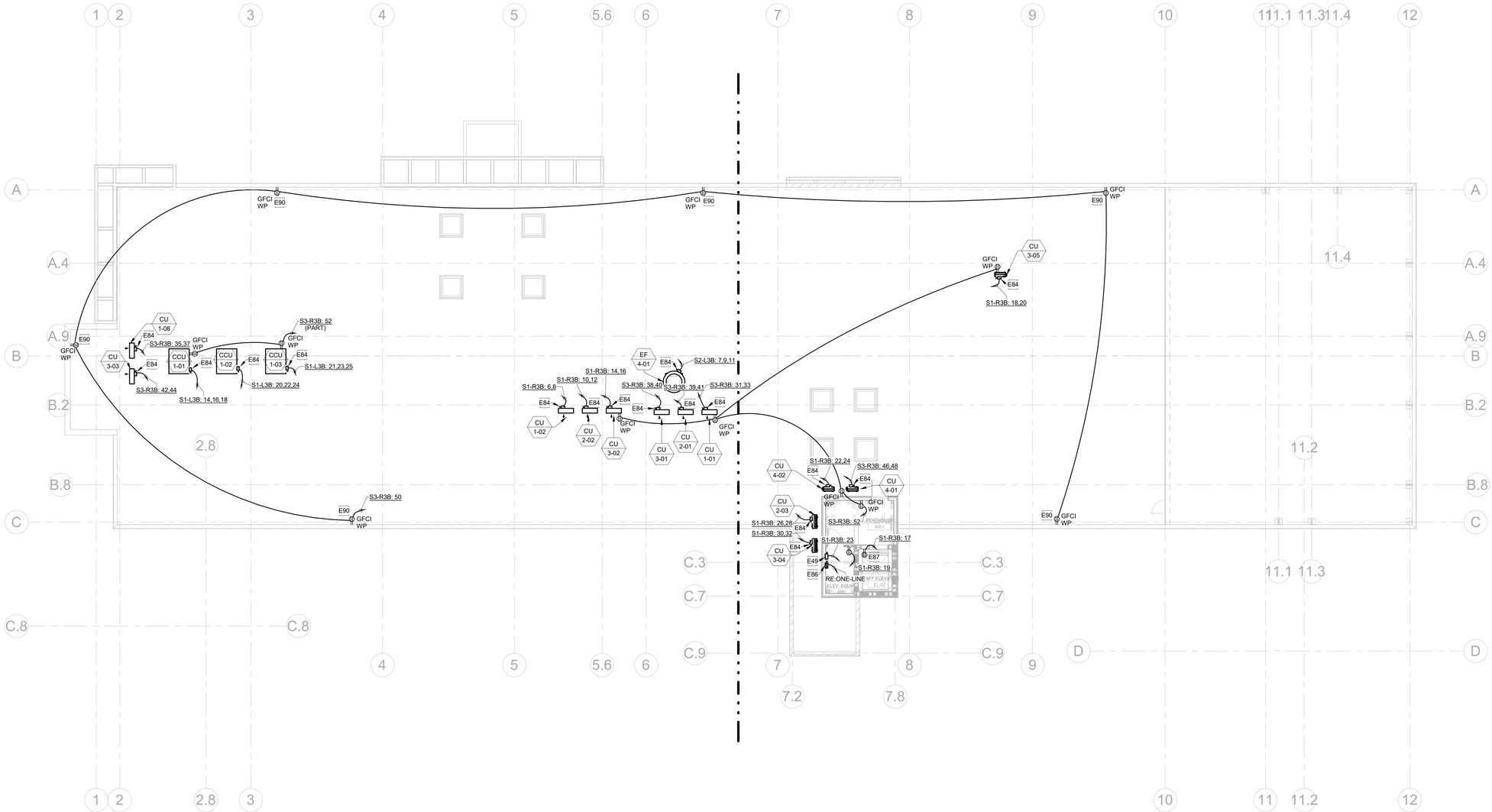

1 ROOF - MECH POWER OVERALL PLAN
3/32" = 1'-0"

GENERAL NOTES:

1. ELECTRICAL CONTRACTOR SHALL COORDINATE EXACT LOCATION OF ALL MECHANICAL AND PLUMBING UNITS WITH MECHANICAL AND PLUMBING CONTRACTORS. REFER TO "MEP" SERIES DRAWINGS FOR ALL MECHANICAL AND PLUMBING EQUIPMENT ELECTRICAL CONNECTIONS.

2. ALL EXPOSED CONDUIT SHALL BE ROUTED PERPENDICULAR, PARALLEL, AND TIGHT TO COLUMNS AND BEAMS. ALL EXPOSED CONDUIT ROUTING SHALL BE COORDINATED WITH ENGINEER AND ARCHITECT PRIOR TO INSTALLATION. NO ADDITIONAL COST TO OWNER WILL BE ALLOWED FOR RELOCATING CONDUIT DUE TO THE LACK OF COORDINATION WITH ARCHITECT.

3. ALL BACK BOXES SHALL BE FLUSH MOUNTED UNLESS NOTED OTHERWISE. ALL VERTICAL SECTIONS OF CONDUIT SHALL BE CONCEALED. CONTRACTOR SHALL COORDINATE INSTALLATION OF CONDUIT AND BACK BOXES IN CONCRETE, MASONRY AND GYP. WALLS.

4. CIRCUIT TO ALL MECHANICAL EQUIPMENT SHALL BE DEDICATED UNLESS NOTED OTHERWISE.

5. ELECTRICAL CONTRACTOR SHALL COORDINATE EXACT LOCATION OF ALL AV, SECURITY, AND IT UNITS WITH LOW VOLTAGE CONTRACTOR. REFER TO "AV" AND "T" SERIES DRAWINGS FOR ALL NECESSARY EQUIPMENT ELECTRICAL CONNECTIONS.

6. FOR PRICING PURPOSES PROVIDE A MAXIMUM OF (5) DUPLEX RECEPTACLES PER CIRCUIT.

7. PROVIDE 120V/20A DUPLEX RECEPTACLE FOR EACH TELEVISION LOCATION. REFER TO ARCHITECTURAL DRAWINGS FOR EXACT LOCATIONS. MAXIMUM OF (4) TELEVISIONS PER CIRCUIT. ROUTE ALL TELEVISION CIRCUITS THROUGH LIGHTING CONTROL SYSTEM.

8. CALCULATE 120V BRANCH CIRCUITS AS FOLLOWS:
a. PROVIDE A DEDICATED CIRCUIT FOR ALL
EQUIPMENT INDICATED ON ARCHITECTURAL DRAWINGS,INCLUDING REFRIGERATORS, VENDING MACHINES, COPIERS, ETC.
b. 25% OF ALL 120V NEMA 5-20R RECEPTACLES SHALL BE ON DEDICATED CIRCUITS.

9. PROVIDE (1) DEDICATED 120V/20A CIRCUIT FOR ALL CONTROL PANELS AND BMS/DDC PANELS.

10. PROVIDE GROUNDING/BONDING PER NEC ARTICLE 680.

11. ALL 125V, 20A RECEPTACLES WITHIN 6' OF A SINK SHALL HAVE GFCI PROTECTION.

12. COORDINATE INSTALLATION OF DISCONNECTS WITH OTHER ELEMENTS TO MEET NEC CLEARANCES.

13. PROVIDE 120V/20A CONNECTION FOR MECHANICAL DAMPER POWER. COORDINATE WITH MECHANICAL DRAWINGS & DIVISION 23 FOR LOCATIONS.

14. PROVIDE 120V/20A CIRCUIT FROM EMERGENCY SYSTEM FOR FIRE SMOKE DAMPERS. COORDINATE EXACT LOCATIONS WITH DIVISION 23 AND FIRE ALARM INSTALLER.

KEYNOTES

E49	PROVIDE 30A/1P DISCONNECT FOR ELEVATOR CAB LIGHTING AND FAN. COORDINATE LOCATION OF DISCONNECTS WITH ELEVATOR INSTALLER PRIOR TO ROUGH-IN.
E84	PROVIDE NEMA 3R RATED DISCONNECT.
E86	PROVIDE COOPER BUSSMANN POWER MODULE ELEVATOR DISCONNECT OR APPROVED EQUAL. PROVIDE FIRE SAFETY INTERFACE RELAY FOR CONTROL BY FIRE ALARM. COORDINATE LOCATION WITH ELEVATOR INSTALLER PRIOR TO ROUGH-IN.
E87	PROVIDE DEDICATED 120V, 20A/1PH CIRCUIT FOR TOP OF ELEVATOR SHAFT RECEPTACLE AND LIGHTING. REQUIRED LIGHTING SHALL NOT BE CONNECTED TO THE LOAD SIDE OF THE GFCI.
E90	ROUTE RECEPTACLE THROUGH LIGHTING CONTROL PANEL FOR TIMECLOCK CONTROL OF HOLIDAY LIGHTING.

BRINKLEY SARGENT WIGINTON ARCHITECTS

Architect: Brinkley Sargent Wigintion Architects (972) 960-9970
Landscape: Kendall Landscape Architecture (214) 739-3226
Structural: L.A. Fuess Partners, Inc (214) 593-1118
MEP: M-E Engineers (214) 741-1589
Civil: KSA Engineers, Inc (903) 236-7700
Technology: M-E Engineers (303) 421-6656

LONGVIEW POLICE DEPARTMENT

518 W. SOUTH ST. LONGVIEW, TEXAS 75601

History		
#	Date	Description

STATE OF TEXAS
ANDREW SHIVLEY
109010
LICENSED
PROFESSIONAL ENGINEER

ME Engineers, Inc.
F-10231
08/19/2020

ROOF - MECH POWER OVERALL PLAN

20513
08/19/2020

E340

BID ISSUE

5/17/2020 9:50:56 AM

C:\Revit Projects\2015\LRL_CENTRAL_E19_Drawings\MEP\E1.rvt

© 2020 Brinkley Sargent Wigginton Architects, Inc.

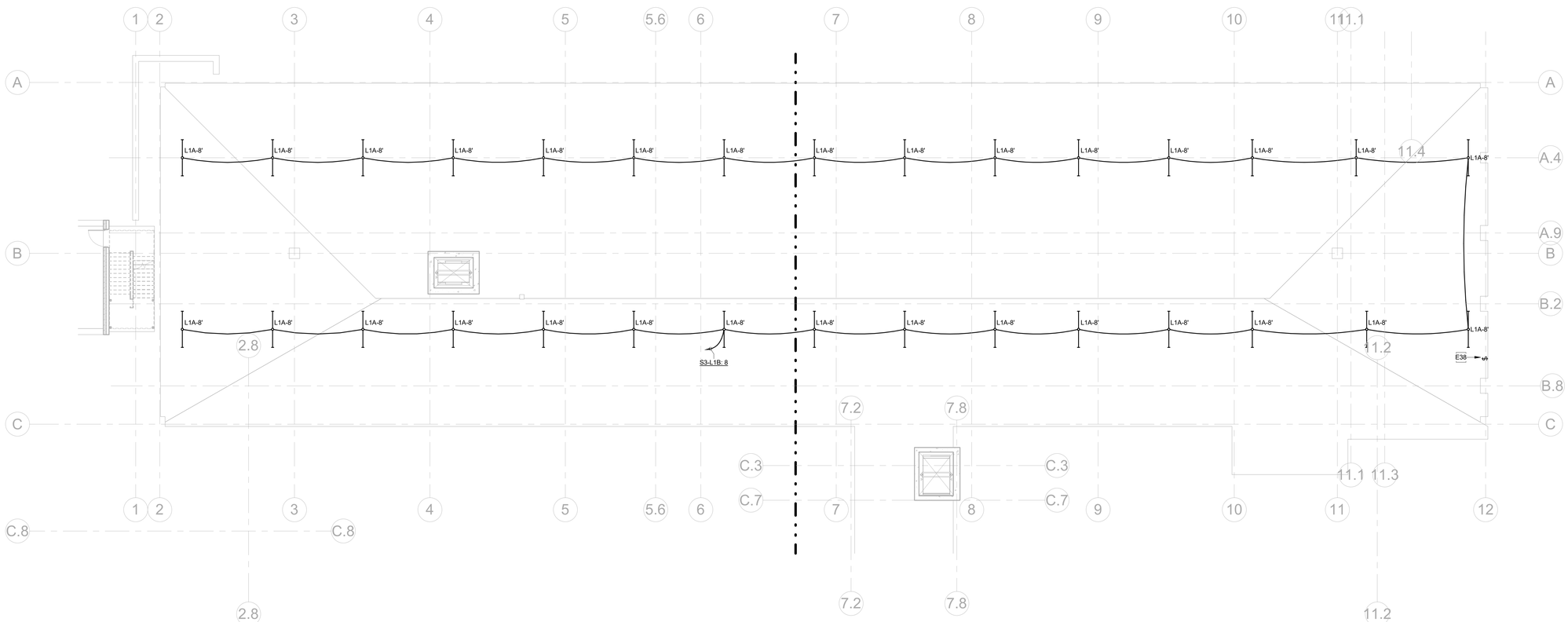

GENERAL NOTES:

1. ELECTRICAL CONTRACTOR SHALL COORDINATE EXACT LOCATION OF ALL MECHANICAL AND PLUMBING UNITS WITH MECHANICAL AND PLUMBING CONTRACTORS. REFER TO "MEP" SERIES DRAWINGS FOR ALL MECHANICAL AND PLUMBING EQUIPMENT ELECTRICAL CONNECTIONS.

2. ALL EXPOSED CONDUIT SHALL BE ROUTED PERPENDICULAR, PARALLEL, AND TIGHT TO COLUMNS AND BEAMS. ALL EXPOSED CONDUIT ROUTING SHALL BE COORDINATED WITH ENGINEER AND ARCHITECT PRIOR TO INSTALLATION. NO ADDITIONAL COST TO OWNER WILL BE ALLOWED FOR RELOCATING CONDUIT DUE TO THE LACK OF COORDINATION WITH ARCHITECT.

3. ALL BACK BOXES SHALL BE FLUSH MOUNTED UNLESS NOTED OTHERWISE. ALL VERTICAL SECTIONS OF CONDUIT SHALL BE CONCEALED. CONTRACTOR SHALL COORDINATE INSTALLATION OF CONDUIT AND BACK BOXES IN CONCRETE, MASONRY AND GYP. WALLS.

4. CIRCUIT TO ALL MECHANICAL EQUIPMENT SHALL BE DEDICATED UNLESS NOTED OTHERWISE.

5. ELECTRICAL CONTRACTOR SHALL COORDINATE EXACT LOCATION OF ALL AV, SECURITY, AND IT UNITS WITH LOW VOLTAGE CONTRACTOR. REFER TO "AV" AND "T" SERIES DRAWINGS FOR ALL NECESSARY EQUIPMENT ELECTRICAL CONNECTIONS.

6. FOR PRICING PURPOSES PROVIDE A MAXIMUM OF (5) DUPLEX RECEPTACLES PER CIRCUIT.

7. PROVIDE 120V/20A DUPLEX RECEPTACLE FOR EACH TELEVISION LOCATION. REFER TO ARCHITECTURAL DRAWINGS FOR EXACT LOCATIONS. MAXIMUM OF (4) TELEVISIONS PER CIRCUIT. ROUTE ALL TELEVISION CIRCUITS THROUGH LIGHTING CONTROL SYSTEM.

8. CALCULATE 120V BRANCH CIRCUITS AS FOLLOWS:
   a. PROVIDE A DEDICATED CIRCUIT FOR ALL EQUIPMENT INDICATED ON ARCHITECTURAL DRAWINGS,INCLUDING REFRIGERATORS, VENDING MACHINES, COPIERS, ETC.
   b. 25% OF ALL 120V NEMA 5-20R RECEPTACLES SHALL BE ON DEDICATED CIRCUITS.

9. PROVIDE (1) DEDICATED 120V/20A CIRCUIT FOR ALL CONTROL PANELS AND BMS/DDC PANELS.

10. PROVIDE GROUNDING/BONDING PER NEC ARTICLE 680.

11. ALL 125V, 20A RECEPTACLES WITHIN 6' OF A SINK SHALL HAVE GFCI PROTECTION.

12. COORDINATE INSTALLATION OF DISCONNECTS WITH OTHER ELEMENTS TO MEET NEC CLEARANCES.

13. PROVIDE 120V/20A CONNECTION FOR MECHANICAL DAMPER POWER. COORDINATE WITH MECHANICAL DRAWINGS & DIVISION 23 FOR LOCATIONS.

14. PROVIDE 120V/20A CIRCUIT FROM EMERGENCY SYSTEM FOR FIRE SMOKE DAMPERS. COORDINATE EXACT LOCATIONS WITH DIVISION 23 AND FIRE ALARM INSTALLER.

KEYNOTES	
E38	COORDINATE LIGHTING SWITCH LOCATION AT CRAWL SPACE ENTRY.

Architect: Brinkley Sargent Wigginton Architects (972) 960-9970
Landscape: Kendall Landscape Architecture (214) 739-3226
Structural: L.A. Fuess Partners, Inc (214) 593-1118
MEP: M-E Engineers (214) 741-1589
Civil: KSA Engineers, Inc (903) 236-7700
Technology: M-E Engineers (303) 421-6656

BRINKLEY SARGENT WIGINTON ARCHITECTS

LONGVIEW POLICE DEPARTMENT

518 W. SOUTH ST. LONGVIEW, TEXAS 75601

History

#	Date	Description

ANDREW SHIVLEY
109010
LICENSED PROFESSIONAL ENGINEER
ME Engineers, Inc.
F-10231
08/19/2020

CRAWL SPACE - ELECTRICAL OVERALL PLAN

20513
08/19/2020
E350

BID ISSUE

8/17/2020 9:50:59 AM

C:\Revit Projects\2015\LRL_CENTRAL_E19_Dave.Whites@PLT.rvt

© 2020 Brinkley Sargent Wigginton Architects, Inc.

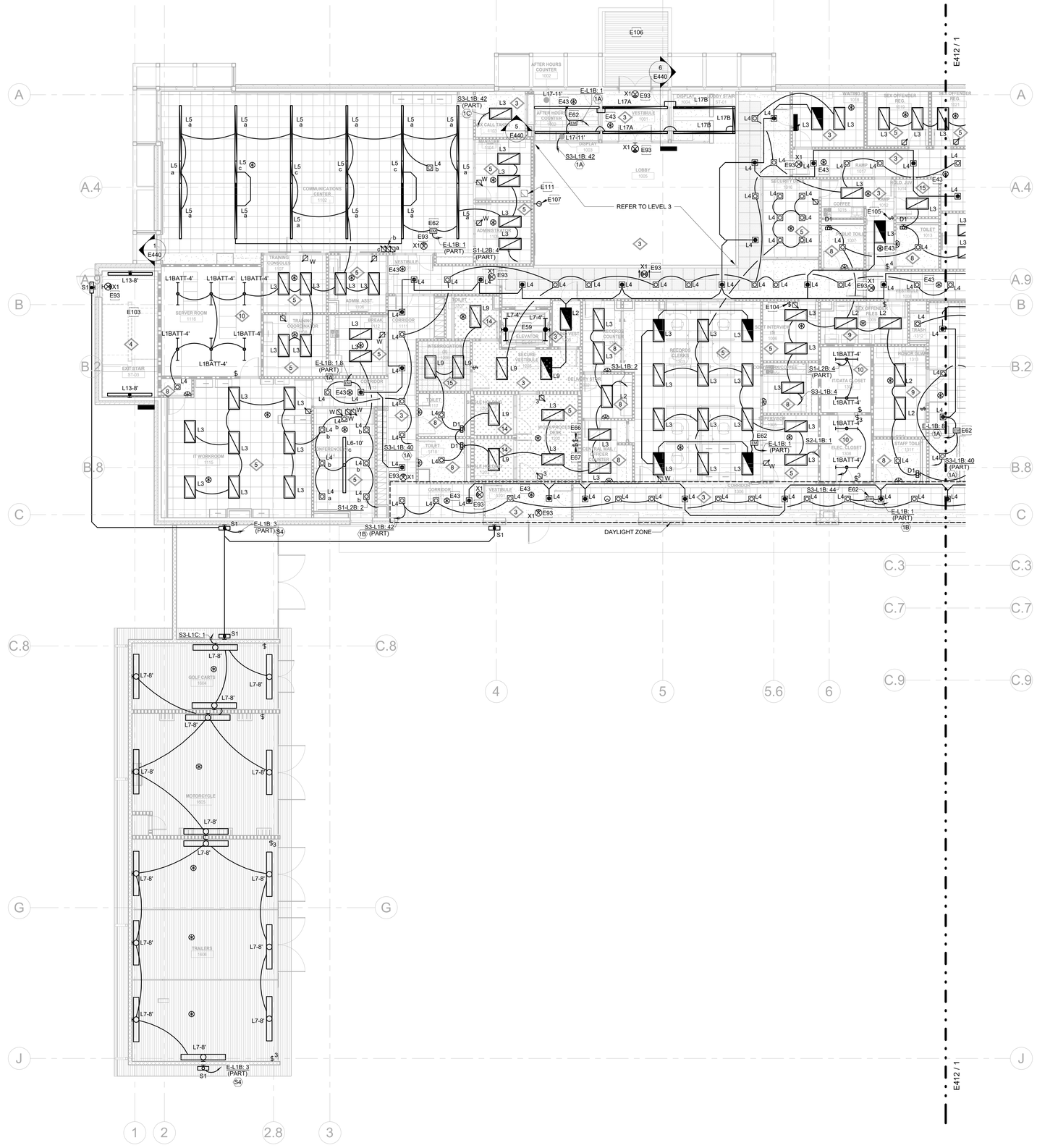

1 LEVEL 1 - REFLECTED CEILING LIGHTING PLAN - WEST
1/8" = 1'-0"

GENERAL NOTES:

1. REFER TO SHEET E040 FOR LIGHT FIXTURE SCHEDULE AND E041 FOR LIGHTING CONTROL MATRIX.
2. REFER TO ARCHITECTURAL REFLECTED CEILING PLANS FOR ALL FIXTURE LOCATIONS WITHIN A CEILING OR CEILING GRID. FOR AREAS WITHOUT CEILINGS, FIXTURE LOCATIONS ARE DIAGRAMMATIC. THE INTENT IS TO ALIGN, CENTER, OR SPACE FIXTURES BETWEEN ARCHITECTURAL AND STRUCTURAL ELEMENTS.
3. ALL EXPOSED CONDUIT SHALL BE ROUTED PERPENDICULAR, PARALLEL, AND TIGHT TO COLUMNS AND BEAMS. ALL EXPOSED CONDUIT ROUTING SHALL BE COORDINATED WITH THE ARCHITECT PRIOR TO INSTALLATION AND INSTALLED IN A NEAT AND CONSISTENT MANNER. NO ADDITIONAL COST TO OWNER WILL BE ALLOWED FOR RELOCATING CONDUIT DUE TO THE LACK OF COORDINATION WITH ARCHITECT. ALL SURFACE MOUNTED CONDUIT WHERE EXPOSED TO PUBLIC AREAS SHALL BE PAINTED. PAINT COLOR TO BE DETERMINED BY THE ARCHITECT.
4. FIELD VERIFY EXACT FIXTURE LENGTHS FOR CONTINUOUS ILLUMINATION FOR COVES AND LINEAR RUNS. PROVIDE CONTINUOUS ILLUMINATION WITH NO MORE THAN A 6" GAP BETWEEN THE END OF THE EDGE OF THE WALL / CEILING AND THE FIXTURE.
5. ELECTRICAL CONTRACTOR TO COORDINATE WITH MECHANICAL CONTRACTOR FOR PLACEMENT OF FIXTURES WITHIN MECHANICAL ROOMS.
6. ALL EXIT LIGHTS OF ALL TYPES SHALL BE MOUNTED AT 8'-0" AFF UNLESS OTHERWISE NOTED. PROVIDE EXIT SIGNS IN ALL PATH OF EGRESS. THERE SHOULD NOT BE MORE THAN 80' SPACING BETWEEN EXIT SIGNS.
7. HALF OF LIGHT FIXTURES IN STAIRWAYS SHALL BE ON EMERGENCY POWER AND HALF ON "TIER 1 STAND-BY POWER.
8. PROVIDE A LIGHTING CONTROL SYSTEM WHICH MEETS THE REQUIREMENTS OF THE ADOPTED ENERGY CODE, INCLUDING BUT NOT LIMITED TO THE FOLLOWING:

   a. COMPUTER CONTROLLED LIGHTING CONTROL SYSTEM PER THE SPECIFICATIONS.

   b. LOW VOLTAGE OVERRIDES READILY ACCESSIBLE FOR NORMALLY OCCUPIED SPACES. ONE CONTROL FOR EVERY 5000 SF OF SPACE.

   c. ALL CONFERENCE ROOMS, OFFICES, BREAK ROOMS AND MEETING ROOMS SHALL HAVE DUAL TECHNOLOGY OCCUPANCY SENSORS.
9. THE LIGHTING CONTROL SYSTEM SHALL INCLUDE PROVISIONS FOR SERVING THE FACILITY'S EGRESS/EXIT LIGHTING AND SHALL BE UL 924 LISTED.
10. COORDINATE UNDERCABINET LIGHTS, L8 TYPE, WITH MILLWORK. REFER TO ARCHITECTURAL PLANS FOR DETAIL. PROVIDE LENGTHS AND MOUNTING EQUIPMENT AS REQUIRED.
11. PROVIDE NECESSARY QUANTITY OF OCCUPANCY SENSORS TO COVER 90% OF SPACES INDICATED.

KEYNOTES

E43	PROVIDE OCCUPANCY SENSORS IN CORRIDOR FOR AFTERHOURS OVERRIDE.
E59	REFER TO E211/E212 SERIES DRAWINGS FOR ELEVATOR PIT LIGHT CIRCUITING INFORMATION. LOCATE SWITCH AT LADDER ENTRANCE.
E62	PROVIDE LOCAL UL924 DEVICE SO EMERGENCY LIGHTING CAN BE CONTROLLED WITH NORMAL LIGHTING OF SIMILAR ZONE. LIGHTS TO COME FULL ON UPON LOSS OF POWER.
E66	PROVIDE SWITCH FOR OVERHEAD LIGHTS OF SINGLE HOLDING CELL 1204. COORDINATE ROUGH-IN LOCATION WITH ARCHITECT AND FINAL FURNITURE LAYOUT.
E67	PROVIDE SWITCH FOR OVERHEAD LIGHTS OF SINGLE HOLDING CELL 1203. COORDINATE ROUGH-IN LOCATION WITH ARCHITECT AND FINAL FURNITURE LAYOUT.
E93	CIRCUIT EXIT SIGNS TO EL1B:2.
E103	REFER TO E440 FOR SECTION WITH CIRCUITING INFORMATION OF STAIRWELL FIXTURES.
E104	PROVIDE STATUS INDICATOR PILOT LIGHT WITH ENGRAVED LAMINATED SIGN READING "IN-USE LIGHT".
E105	PROVIDE SWITCH FOR OVERHEAD LIGHTS OF HOLD JUV 1014. COORDINATE ROUGH-IN LOCATION WITH ARCHITECT AND FINAL FURNITURE LAYOUT.
E106	EMERGENCY EGRESS LIGHTING SHOWN ON E101, S8 TYPE FIXTURE.
E107	LED TAPE FOR BACK-LIT OF LONGVIEW POLICE ACRYLIC EMBLEM. REFER TO ARCHITECTURAL DRAWINGS FOR EXACT DIMENSIONS. COORDINATE MOUNTING DURING SIGNAGE SUBMITTAL PHASE. REFER TO DRAWINGS FOR REMOTE DRIVER LOCATION.
E111	REMOTE DRIVER LOCATION FOR L21 LED TAPE LIGHT. COORDINATE LOCATION ABOVE ACCESIBLE CEILING NEARBY.

BRINKLEY SARGENT WIGINTON ARCHITECTS

Architect: Brinkley Sargent Wigginton Architects (972) 960-9970
Landscape: Kendall Landscape Architecture (214) 739-3226
Structural: L.A. Fuess Partners, Inc (214) 593-1118
MEP: M-E Engineers (214) 741-1589
Civil: KSA Engineers, Inc (903) 236-7700
Technology: M-E Engineers (303) 421-6656

LONGVIEW POLICE DEPARTMENT

518 W. SOUTH ST. LONGVIEW, TEXAS 75601

History		
#	Date	Description

STATE OF TEXAS
ANDREW SHIVLEY
109010
LICENSED PROFESSIONAL ENGINEER
ME Engineers, Inc.
F-10231
08/19/2020

LEVEL 1 - REFLECTED CEILING LIGHTING PLAN - WEST

20513
08/19/2020
E411

BID ISSUE

8/17/2020 12:17:49 PM

C:\Users\Projects\2019\LPD_CD\FINAL_E19_Series.RVT\E411.rvt

© 2020 Brinkley Sargent Wigginton Architects, Inc.

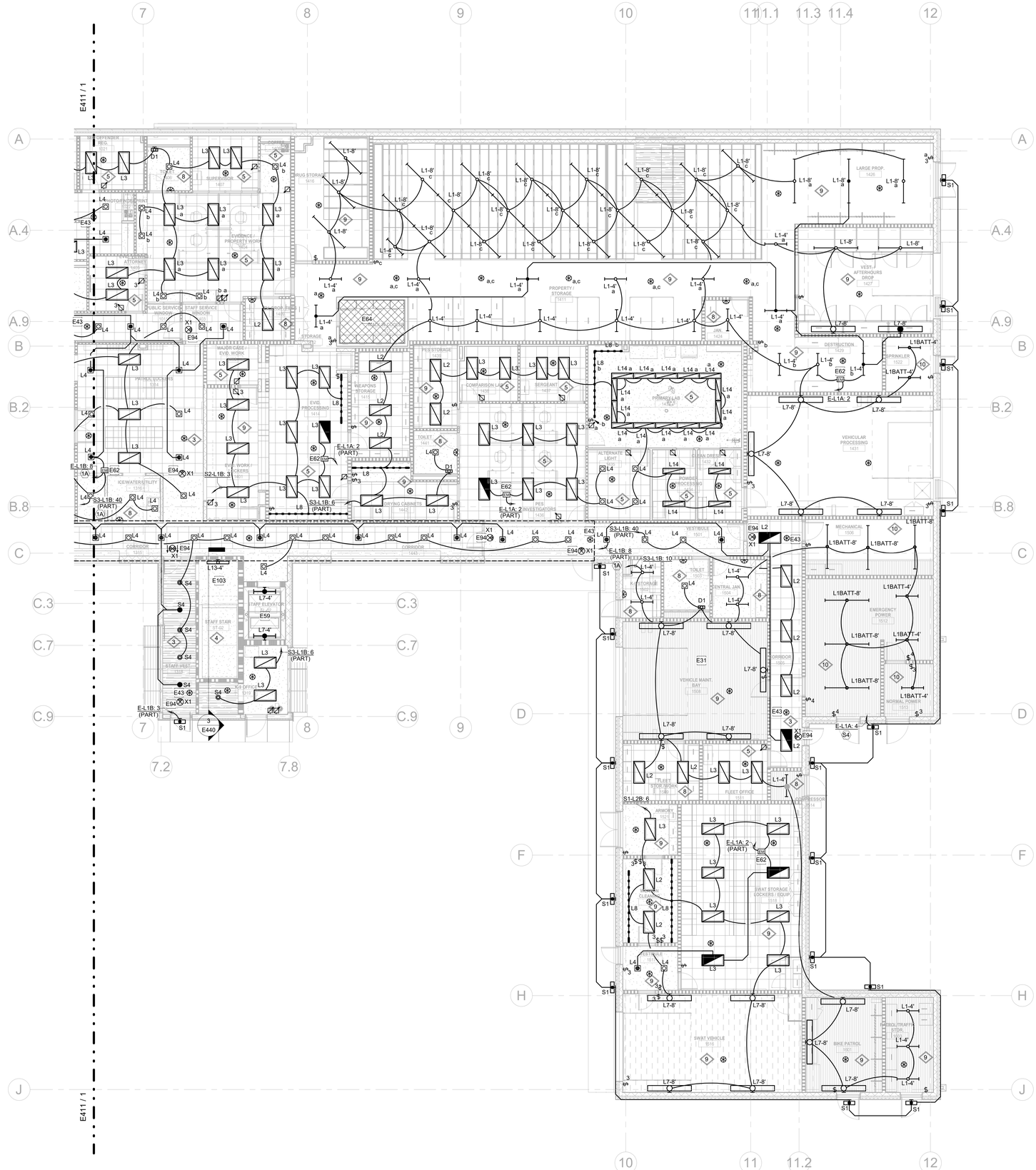

1 LEVEL 1 - REFLECTED CEILING LIGHTING PLAN - EAST
1/8" = 1'-0"

GENERAL NOTES:

1. REFER TO SHEET E040 FOR LIGHT FIXTURE SCHEDULE AND E041 FOR LIGHTING CONTROL MATRIX.
2. REFER TO ARCHITECTURAL REFLECTED CEILING PLANS FOR ALL FIXTURE LOCATIONS WITHIN A CEILING OR CEILING GRID. FOR AREAS WITHOUT CEILINGS, FIXTURE LOCATIONS ARE DIAGRAMMATIC. THE INTENT IS TO ALIGN, CENTER, OR SPACE FIXTURES BETWEEN ARCHITECTURAL AND STRUCTURAL ELEMENTS.
3. ALL EXPOSED CONDUIT SHALL BE ROUTED PERPENDICULAR, PARALLEL, AND TIGHT TO COLUMNS AND BEAMS. ALL EXPOSED CONDUIT ROUTING SHALL BE COORDINATED WITH THE ARCHITECT PRIOR TO INSTALLATION AND INSTALLED IN A NEAT AND CONSISTENT MANNER. NO ADDITIONAL COST TO OWNER WILL BE ALLOWED FOR RELOCATING CONDUIT DUE TO THE LACK OF COORDINATION WITH ARCHITECT. ALL SURFACE MOUNTED CONDUIT WHERE EXPOSED TO PUBLIC AREAS SHALL BE PAINTED. PAINT COLOR TO BE DETERMINED BY THE ARCHITECT.
4. FIELD VERIFY EXACT FIXTURE LENGTHS FOR CONTINUOUS ILLUMINATION FOR COVES AND LINEAR RUNS. PROVIDE CONTINUOUS ILLUMINATION WITH NO MORE THAN A 6" GAP BETWEEN THE END OF THE EDGE OF THE WALL / CEILING AND THE FIXTURE.
5. ELECTRICAL CONTRACTOR TO COORDINATE WITH MECHANICAL CONTRACTOR FOR PLACEMENT OF FIXTURES WITHIN MECHANICAL ROOMS.
6. ALL EXIT LIGHTS OF ALL TYPES SHALL BE MOUNTED AT 8'-0" AFF UNLESS OTHERWISE NOTED. PROVIDE EXIT SIGNS IN ALL PATH OF EGRESS. THERE SHOULD NOT BE MORE THAN 80' SPACING BETWEEN EXIT SIGNS.
7. HALF OF LIGHT FIXTURES IN STAIRWAYS SHALL BE ON EMERGENCY POWER AND HALF ON "TIER 1 STAND-BY POWER.
8. PROVIDE A LIGHTING CONTROL SYSTEM WHICH MEETS THE REQUIREMENTS OF THE ADOPTED ENERGY CODE, INCLUDING BUT NOT LIMITED TO THE FOLLOWING:

   a. COMPUTER CONTROLLED LIGHTING CONTROL SYSTEM PER THE SPECIFICATIONS.

   b. LOW VOLTAGE OVERRIDES READILY ACCESSIBLE FOR NORMALLY OCCUPIED SPACES. ONE CONTROL FOR EVERY 5000 SF OF SPACE.

   c. ALL CONFERENCE ROOMS, OFFICES, BREAK ROOMS AND MEETING ROOMS SHALL HAVE DUAL TECHNOLOGY OCCUPANCY SENSORS.
9. THE LIGHTING CONTROL SYSTEM SHALL INCLUDE PROVISIONS FOR SERVING THE FACILITY'S EGRESS/EXIT LIGHTING AND SHALL BE UL 924 LISTED.
10. COORDINATE UNDERCABINET LIGHTS, L8 TYPE, WITH MILLWORK. REFER TO ARCHITECTURAL PLANS FOR DETAIL. PROVIDE LENGTHS AND MOUNTING EQUIPMENT AS REQUIRED.
11. PROVIDE NECESSARY QUANTITY OF OCCUPANCY SENSORS TO COVER 90% OF SPACES INDICATED.

KEYNOTES

E29	LIGHTING AND SWITCH IN WALK-IN COOLER PROVIDED BY MANUFACTURER.
E31	COORDINATE LIGHT FIXTURE LOCATIONS WITH EQUIPMENT IN SPACE. WALL OR CEILING MOUNT AS NECESSARY.
E43	PROVIDE OCCUPANCY SENSORS IN CORRIDOR FOR AFTERHOURS OVERRIDE.
E59	REFER TO E211/E212 SERIES DRAWINGS FOR ELEVATOR PIT LIGHT CIRCUITING INFORMATION. LOCATE SWITCH AT LADDER ENTRANCE.
E62	PROVIDE LOCAL UL924 DEVICE SO EMERGENCY LIGHTING CAN BE CONTROLLED WITH NORMAL LIGHTING OF SIMILAR ZONE. LIGHTS TO COME FULL ON UPON LOSS OF POWER.
E64	EQUIPMENT MANUFACTURER TO PROVIDE LIGHTING.
E94	CIRCUIT EXIT SIGNS TO EL1B:4.
E103	REFER TO E440 FOR SECTION WITH CIRCUITING INFORMATION OF STAIRWELL FIXTURES.

BRINKLEY SARGENT WIGINTON ARCHITECTS

Architect: Brinkley Sargent Wigginton Architects (972) 960-9970
Landscape: Kendall Landscape Architecture (214) 739-3226
Structural: L.A. Fuess Partners, Inc (214) 593-1118
MEP: M-E Engineers (214) 741-1589
Civil: KSA Engineers, Inc (903) 236-7700
Technology: M-E Engineers (303) 421-6656

LONGVIEW POLICE DEPARTMENT

518 W. SOUTH ST. LONGVIEW, TEXAS 75601

History		
#	Date	Description

STATE OF TEXAS
ANDREW SHIVLEY
109010
LICENSED
PROFESSIONAL ENGINEER
ME Engineers, Inc.
F-10231
08/19/2020

LEVEL 1 - REFLECTED CEILING LIGHTING PLAN - EAST

20513
08/19/2020

E412

BID ISSUE

8/17/2020 12:17:59 PM

C:\Revit Projects\2018\LPD_CENTRAL_E18_Demo.Revit\E412.rvt

© 2020 Brinkley Sargent Wigginton Architects, Inc.

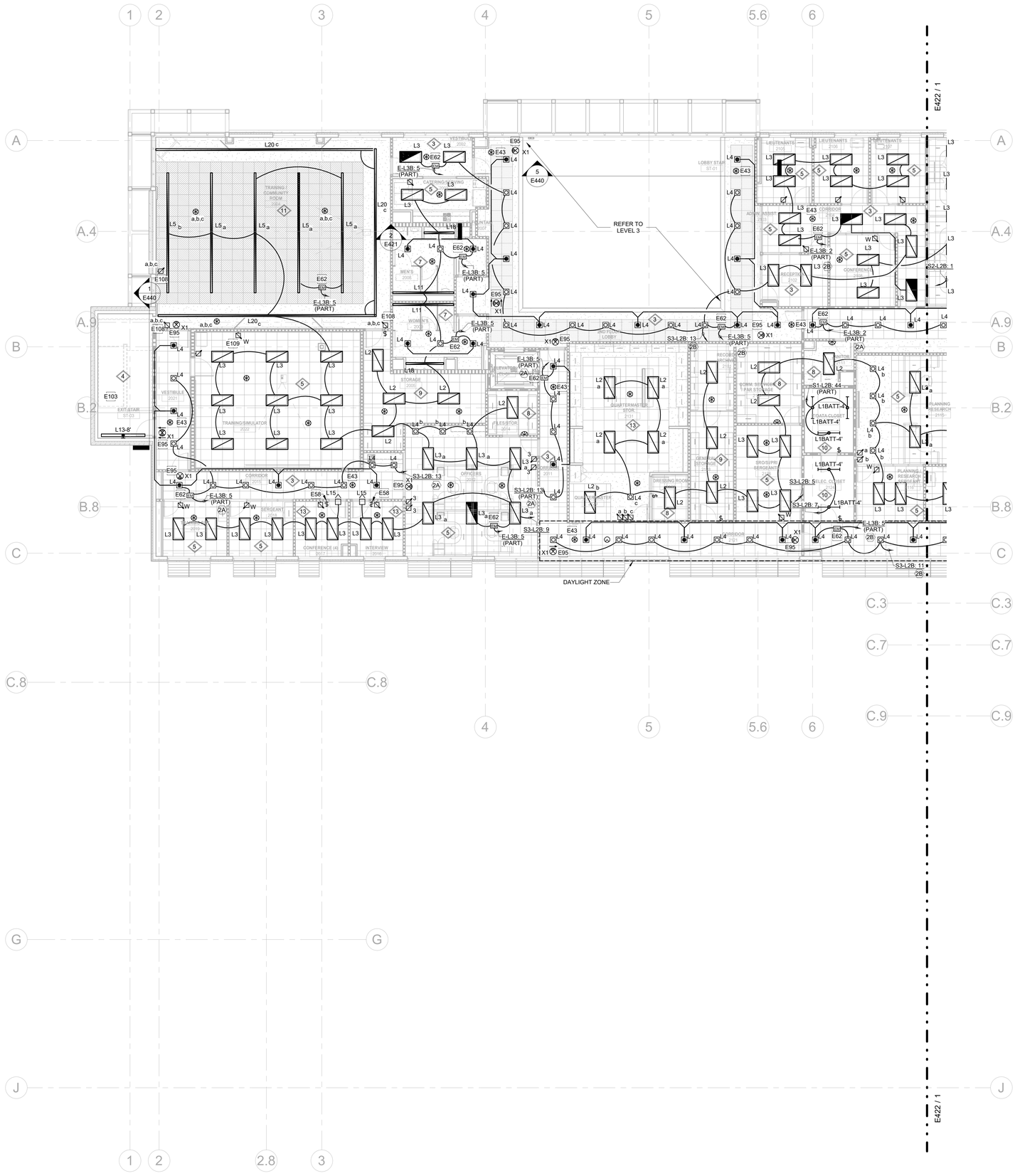

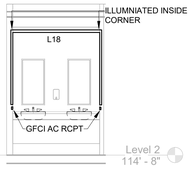

2 MENS/WOMENS 2008 RR LTG
1/4" = 1'-0"

1 LEVEL 2 - REFLECTED CEILING LIGHTING PLAN - WEST
1/8" = 1'-0"

GENERAL NOTES:

1. REFER TO SHEET E040 FOR LIGHT FIXTURE SCHEDULE AND E041 FOR LIGHTING CONTROL MATRIX.
2. REFER TO ARCHITECTURAL REFLECTED CEILING PLANS FOR ALL FIXTURE LOCATIONS WITHIN A CEILING OR CEILING GRID. FOR AREAS WITHOUT CEILINGS, FIXTURE LOCATIONS ARE DIAGRAMMATIC. THE INTENT IS TO ALIGN, CENTER, OR SPACE FIXTURES BETWEEN ARCHITECTURAL AND STRUCTURAL ELEMENTS.
3. ALL EXPOSED CONDUIT SHALL BE ROUTED PERPENDICULAR, PARALLEL, AND TIGHT TO COLUMNS AND BEAMS. ALL EXPOSED CONDUIT ROUTING SHALL BE COORDINATED WITH THE ARCHITECT PRIOR TO INSTALLATION AND INSTALLED IN A NEAT AND CONSISTENT MANNER. NO ADDITIONAL COST TO OWNER WILL BE ALLOWED FOR RELOCATING CONDUIT DUE TO THE LACK OF COORDINATION WITH ARCHITECT. ALL SURFACE MOUNTED CONDUIT WHERE EXPOSED TO PUBLIC AREAS SHALL BE PAINTED. PAINT COLOR TO BE DETERMINED BY THE ARCHITECT.
4. FIELD VERIFY EXACT FIXTURE LENGTHS FOR CONTINUOUS ILLUMINATION FOR COVES AND LINEAR RUNS. PROVIDE CONTINUOUS ILLUMINATION WITH NO MORE THAN A 6" GAP BETWEEN THE END OF THE EDGE OF THE WALL / CEILING AND THE FIXTURE.
5. ELECTRICAL CONTRACTOR TO COORDINATE WITH MECHANICAL CONTRACTOR FOR PLACEMENT OF FIXTURES WITHIN MECHANICAL ROOMS.
6. ALL EXIT LIGHTS OF ALL TYPES SHALL BE MOUNTED AT 8'-0" AFF UNLESS OTHERWISE NOTED. PROVIDE EXIT SIGNS IN ALL PATH OF EGRESS. THERE SHOULD NOT BE MORE THAN 80' SPACING BETWEEN EXIT SIGNS.
7. HALF OF LIGHT FIXTURES IN STAIRWAYS SHALL BE ON EMERGENCY POWER AND HALF ON "TIER 1 STAND-BY POWER.
8. PROVIDE A LIGHTING CONTROL SYSTEM WHICH MEETS THE REQUIREMENTS OF THE ADOPTED ENERGY CODE, INCLUDING BUT NOT LIMITED TO THE FOLLOWING:

   a. COMPUTER CONTROLLED LIGHTING CONTROL SYSTEM PER THE SPECIFICATIONS.

   b. LOW VOLTAGE OVERRIDES READILY ACCESSIBLE FOR NORMALLY OCCUPIED SPACES. ONE CONTROL FOR EVERY 5000 SF OF SPACE.

   c. ALL CONFERENCE ROOMS, OFFICES, BREAK ROOMS AND MEETING ROOMS SHALL HAVE DUAL TECHNOLOGY OCCUPANCY SENSORS.
9. THE LIGHTING CONTROL SYSTEM SHALL INCLUDE PROVISIONS FOR SERVING THE FACILITY'S EGRESS/EXIT LIGHTING AND SHALL BE UL 924 LISTED.
10. COORDINATE UNDERCABINET LIGHTS, L8 TYPE, WITH MILLWORK. REFER TO ARCHITECTURAL PLANS FOR DETAIL. PROVIDE LENGTHS AND MOUNTING EQUIPMENT AS REQUIRED.
11. PROVIDE NECESSARY QUANTITY OF OCCUPANCY SENSORS TO COVER 90% OF SPACES INDICATED.

KEYNOTES

E43	PROVIDE OCCUPANCY SENSORS IN CORRIDOR FOR AFTERHOURS OVERRIDE.
E58	LIGHT SWITCH TO TURN ON IN-USE LIGHT ABOVE DOOR.
E62	PROVIDE LOCAL UL924 DEVICE SO EMERGENCY LIGHTING CAN BE CONTROLLED WITH NORMAL LIGHTING OF SIMILAR ZONE. LIGHTS TO COME FULL ON UPON LOSS OF POWER.
E95	CIRCUIT EXIT SIGNS TO EL1BI6.
E103	REFER TO E440 FOR SECTION WITH CIRCUITING INFORMATION OF STAIRWELL FIXTURES.
E108	LOW VOLTAGE, MULTI-ZONE DIMMING, CONTROL STATION.
E109	PROVIDE (2) ADDITIONAL, FLOATING, WIRELESS CONTROL STATIONS FOR THIS ROOM.

Architect: Brinkley Sargent Wigginton Architects (972) 960-9970
Landscape: Kendall Landscape Architecture (214) 739-3226
Structural: L.A. Fuess Partners, Inc (214) 593-1118
MEP: M-E Engineers (214) 741-1589
Civil: KSA Engineers, Inc (903) 236-7700
Technology: M+E Engineers (303) 421-6656

BRINKLEY SARGENT WIGINTON ARCHITECTS

LONGVIEW POLICE DEPARTMENT

518 W. SOUTH ST. LONGVIEW, TEXAS 75601

History		
#	Date	Description

STATE OF TEXAS
ANDREW SHIVLEY
109010
LICENSED PROFESSIONAL ENGINEER
ME Engineers, Inc.
F-10231
08/19/2020

LEVEL 2 - REFLECTED CEILING LIGHTING PLAN - WEST

20513
08/19/2020
E421

BID ISSUE

8/17/2020 12:15:08 PM

C:\Revit Projects\2019\LPD_CENTRAL_ETR_Demo.RVT\E421.rvt

© 2020 Brinkley Sargent Wigginton Architects, Inc.

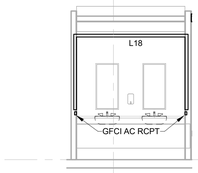

3 WOMENS RR 2209 LTG
1/4" = 1'-0"

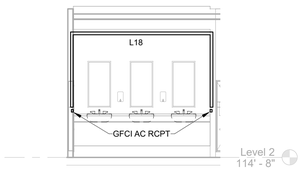

2 MENS RR 2207 LTG
1/4" = 1'-0"

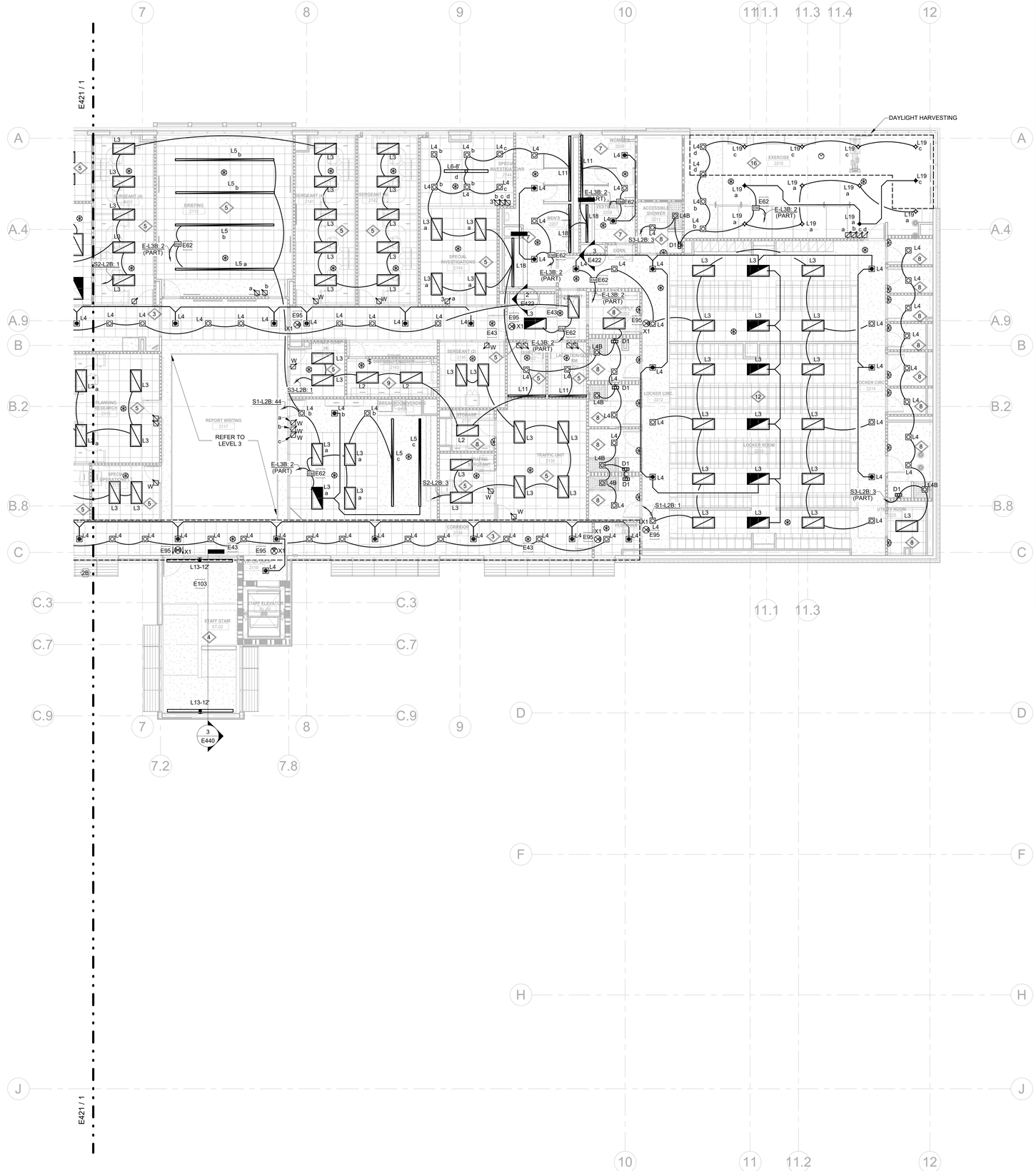

1 LEVEL 2 - REFLECTED CEILING LIGHTING PLAN - EAST
1/8" = 1'-0"

GENERAL NOTES:

1. REFER TO SHEET E040 FOR LIGHT FIXTURE SCHEDULE AND E041 FOR LIGHTING CONTROL MATRIX.
2. REFER TO ARCHITECTURAL REFLECTED CEILING PLANS FOR ALL FIXTURE LOCATIONS WITHIN A CEILING OR CEILING GRID. FOR AREAS WITHOUT CEILINGS, FIXTURE LOCATIONS ARE DIAGRAMMATIC. THE INTENT IS TO ALIGN, CENTER, OR SPACE FIXTURES BETWEEN ARCHITECTURAL AND STRUCTURAL ELEMENTS.
3. ALL EXPOSED CONDUIT SHALL BE ROUTED PERPENDICULAR, PARALLEL, AND TIGHT TO COLUMNS AND BEAMS. ALL EXPOSED CONDUIT ROUTING SHALL BE COORDINATED WITH THE ARCHITECT PRIOR TO INSTALLATION AND INSTALLED IN A NEAT AND CONSISTENT MANNER. NO ADDITIONAL COST TO OWNER WILL BE ALLOWED FOR RELOCATING CONDUIT DUE TO THE LACK OF COORDINATION WITH ARCHITECT. ALL SURFACE MOUNTED CONDUIT WHERE EXPOSED TO PUBLIC AREAS SHALL BE PAINTED. PAINT COLOR TO BE DETERMINED BY THE ARCHITECT.
4. FIELD VERIFY EXACT FIXTURE LENGTHS FOR CONTINUOUS ILLUMINATION FOR COVES AND LINEAR RUNS. PROVIDE CONTINUOUS ILLUMINATION WITH NO MORE THAN A 6" GAP BETWEEN THE END OF THE EDGE OF THE WALL / CEILING AND THE FIXTURE.
5. ELECTRICAL CONTRACTOR TO COORDINATE WITH MECHANICAL CONTRACTOR FOR PLACEMENT OF FIXTURES WITHIN MECHANICAL ROOMS.
6. ALL EXIT LIGHTS OF ALL TYPES SHALL BE MOUNTED AT 8'-0" AFF UNLESS OTHERWISE NOTED. PROVIDE EXIT SIGNS IN ALL PATH OF EGRESS. THERE SHOULD NOT BE MORE THAN 80' SPACING BETWEEN EXIT SIGNS.
7. HALF OF LIGHT FIXTURES IN STAIRWAYS SHALL BE ON EMERGENCY POWER AND HALF ON "TIER 1 STAND-BY POWER.
8. PROVIDE A LIGHTING CONTROL SYSTEM WHICH MEETS THE REQUIREMENTS OF THE ADOPTED ENERGY CODE, INCLUDING BUT NOT LIMITED TO THE FOLLOWING:

   a. COMPUTER CONTROLLED LIGHTING CONTROL SYSTEM PER THE SPECIFICATIONS.

   b. LOW VOLTAGE OVERRIDES READILY ACCESSIBLE FOR NORMALLY OCCUPIED SPACES. ONE CONTROL FOR EVERY 5000 SF OF SPACE.

   c. ALL CONFERENCE ROOMS, OFFICES, BREAK ROOMS AND MEETING ROOMS SHALL HAVE DUAL TECHNOLOGY OCCUPANCY SENSORS.
9. THE LIGHTING CONTROL SYSTEM SHALL INCLUDE PROVISIONS FOR SERVING THE FACILITY'S EGRESS/EXIT LIGHTING AND SHALL BE UL 924 LISTED.
10. COORDINATE UNDERCABINET LIGHTS, L8 TYPE, WITH MILLWORK. REFER TO ARCHITECTURAL PLANS FOR DETAIL. PROVIDE LENGTHS AND MOUNTING EQUIPMENT AS REQUIRED.
11. PROVIDE NECESSARY QUANTITY OF OCCUPANCY SENSORS TO COVER 90% OF SPACES INDICATED.

KEYNOTES	
E43	PROVIDE OCCUPANCY SENSORS IN CORRIDOR FOR AFTERHOURS OVERRIDE.
E62	PROVIDE LOCAL UL924 DEVICE SO EMERGENCY LIGHTING CAN BE CONTROLLED WITH NORMAL LIGHTING OF SIMILAR ZONE. LIGHTS TO COME FULL ON UPON LOSS OF POWER.
E95	CIRCUIT EXIT SIGNS TO EL1BI6.
E103	REFER TO E440 FOR SECTION WITH CIRCUITING INFORMATION OF STAIRWELL FIXTURES.

BRINKLEY SARGENT WIGINTON ARCHITECTS

Architect: Brinkley Sargent Wigginton Architects (972) 960-9970
Landscape: Kendall Landscape Architecture (214) 739-3226
Structural: L.A. Fuess Partners, Inc (214) 593-1118
MEP: M-E Engineers (214) 741-1589
Civil: KSA Engineers, Inc (903) 236-7700
Technology: M-E Engineers (303) 421-6656

LONGVIEW POLICE DEPARTMENT

518 W. SOUTH ST. LONGVIEW, TEXAS 75601

History		
#	Date	Description

STATE OF TEXAS
ANDREW SHIVLEY
109010
LICENSED
PROFESSIONAL ENGINEER
ME Engineers, Inc.
F-10231
08/19/2020

LEVEL 2 - REFLECTED CEILING LIGHTING PLAN - EAST

20513
08/19/2020
E422

BID ISSUE

8/17/2020 12:18:16 PM

C:\Revit Projects\2018\LPD_CENTRAL_EIB_Demo.Revit\E422.rvt

© 2020 Brinkley Sargent Wigintion Architects, Inc.

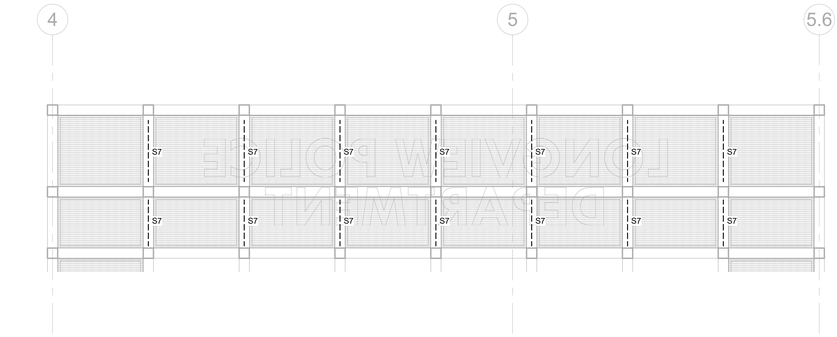

2 FACADE TRELLIS BACKLIGHT
1/4" = 1'-0"

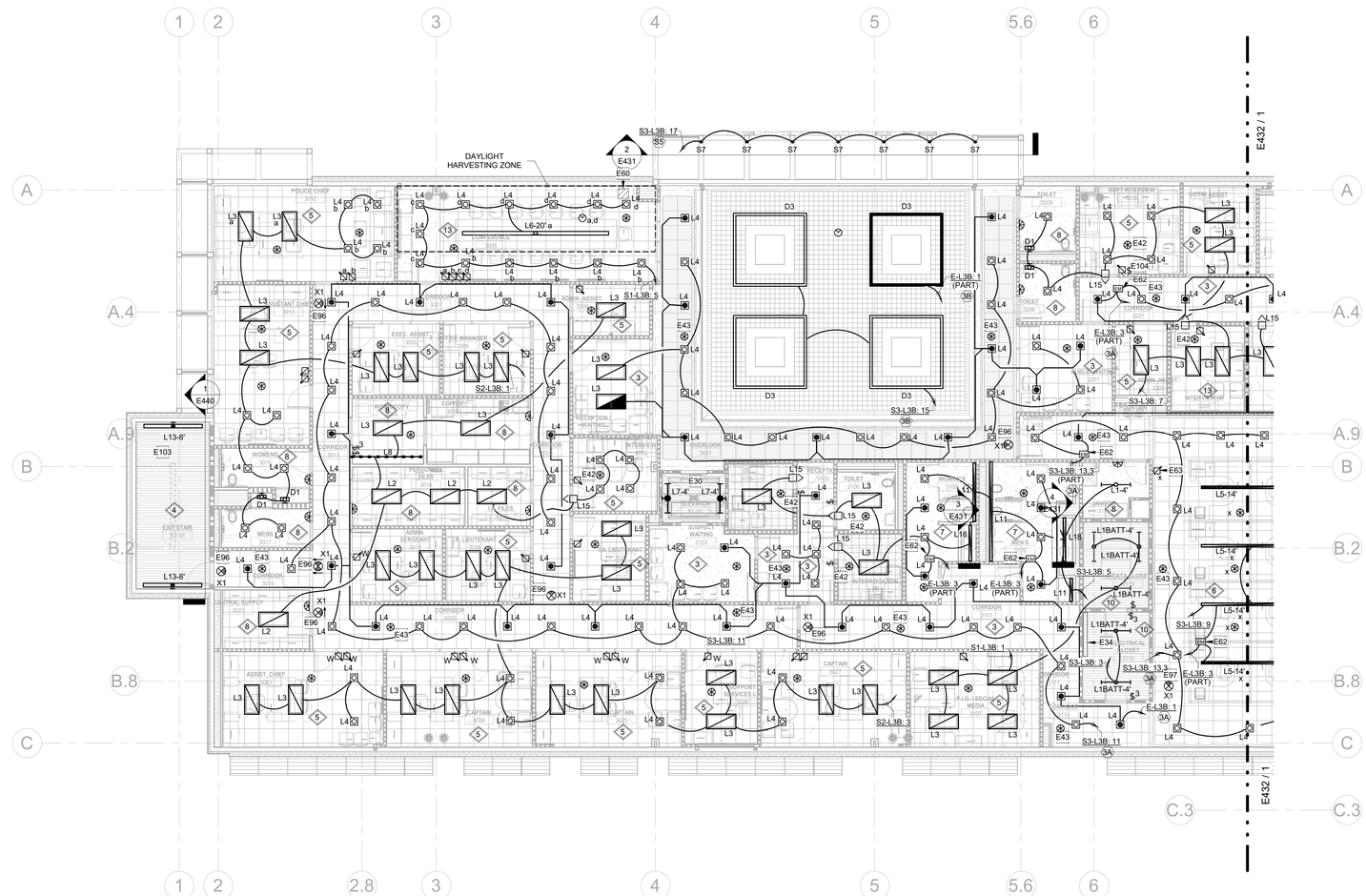

1 LEVEL 3 - REFLECTED CEILING LIGHTING PLAN - WEST
1/8" = 1'-0"

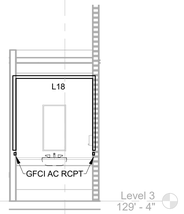

3 WOMENS RR 3108 LTG
1/4" = 1'-0"

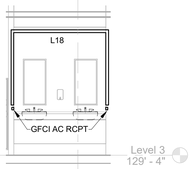

4 MENS RR 3109 LTG
1/4" = 1'-0"

GENERAL NOTES:

1. REFER TO SHEET E040 FOR LIGHT FIXTURE SCHEDULE AND E041 FOR LIGHTING CONTROL MATRIX.
2. REFER TO ARCHITECTURAL REFLECTED CEILING PLANS FOR ALL FIXTURE LOCATIONS WITHIN A CEILING OR CEILING GRID. FOR AREAS WITHOUT CEILINGS, FIXTURE LOCATIONS ARE DIAGRAMMATIC. THE INTENT IS TO ALIGN, CENTER, OR SPACE FIXTURES BETWEEN ARCHITECTURAL AND STRUCTURAL ELEMENTS.
3. ALL EXPOSED CONDUIT SHALL BE ROUTED PERPENDICULAR, PARALLEL, AND TIGHT TO COLUMNS AND BEAMS. ALL EXPOSED CONDUIT ROUTING SHALL BE COORDINATED WITH THE ARCHITECT PRIOR TO INSTALLATION AND INSTALLED IN A NEAT AND CONSISTENT MANNER. NO ADDITIONAL COST TO OWNER WILL BE ALLOWED FOR RELOCATING CONDUIT DUE TO THE LACK OF COORDINATION WITH ARCHITECT. ALL SURFACE MOUNTED CONDUIT WHERE EXPOSED TO PUBLIC AREAS SHALL BE PAINTED. PAINT COLOR TO BE DETERMINED BY THE ARCHITECT.
4. FIELD VERIFY EXACT FIXTURE LENGTHS FOR CONTINUOUS ILLUMINATION FOR COVES AND LINEAR RUNS. PROVIDE CONTINUOUS ILLUMINATION WITH NO MORE THAN A 6" GAP BETWEEN THE END OF THE EDGE OF THE WALL / CEILING AND THE FIXTURE.
5. ELECTRICAL CONTRACTOR TO COORDINATE WITH MECHANICAL CONTRACTOR FOR PLACEMENT OF FIXTURES WITHIN MECHANICAL ROOMS.
6. ALL EXIT LIGHTS OF ALL TYPES SHALL BE MOUNTED AT 8'-0" AFF UNLESS OTHERWISE NOTED. PROVIDE EXIT SIGNS IN ALL PATH OF EGRESS. THERE SHOULD NOT BE MORE THAN 80' SPACING BETWEEN EXIT SIGNS.
7. HALF OF LIGHT FIXTURES IN STAIRWAYS SHALL BE ON EMERGENCY POWER AND HALF ON "TIER 1 STAND-BY POWER.
8. PROVIDE A LIGHTING CONTROL SYSTEM WHICH MEETS THE REQUIREMENTS OF THE ADOPTED ENERGY CODE, INCLUDING BUT NOT LIMITED TO THE FOLLOWING:

   a. COMPUTER CONTROLLED LIGHTING CONTROL SYSTEM PER THE SPECIFICATIONS.

   b. LOW VOLTAGE OVERRIDES READILY ACCESSIBLE FOR NORMALLY OCCUPIED SPACES. ONE CONTROL FOR EVERY 5000 SF OF SPACE.

   c. ALL CONFERENCE ROOMS, OFFICES, BREAK ROOMS AND MEETING ROOMS SHALL HAVE DUAL TECHNOLOGY OCCUPANCY SENSORS.
9. THE LIGHTING CONTROL SYSTEM SHALL INCLUDE PROVISIONS FOR SERVING THE FACILITY'S EGRESS/EXIT LIGHTING AND SHALL BE UL 924 LISTED.
10. COORDINATE UNDERCABINET LIGHTS, L8 TYPE, WITH MILLWORK. REFER TO ARCHITECTURAL PLANS FOR DETAIL. PROVIDE LENGTHS AND MOUNTING EQUIPMENT AS REQUIRED.
11. PROVIDE NECESSARY QUANTITY OF OCCUPANCY SENSORS TO COVER 90% OF SPACES INDICATED.

KEYNOTES

E30	MOUNT FIXTURES AT TOP OF ELEVATOR SHAFT. REFER TO E231/E340 SERIES FOR ELEVATOR CIRCUITING INFORMATION.
E34	ALL DRIVERS FOR TYPE D3, AND D3A FIXTURES TO BE REMOTED TO LEVEL 3 ELECTRIC ROOM. RE:7E501 FOR SPECIFICATION OF DRIVER POWER PANEL.
E42	OCCUPANCY SENSOR TO CONTROL IN-USE SIGN AS WELL AS OVERHEAD LIGHTING.
E43	PROVIDE OCCUPANCY SENSORS IN CORRIDOR FOR AFTERHOURS OVERRIDE.
E60	LOCATE REMOTE DRIVERS FOR TYPE S7 FIXTURES ABOVE CONFERENCE ROOM ACCESSIBLE CEILING.
E62	PROVIDE LOCAL UL924 DEVICE SO EMERGENCY LIGHTING CAN BE CONTROLLED WITH NORMAL LIGHTING OF SIMILAR ZONE. LIGHTS TO COME FULL ON UPON LOSS OF POWER.
E63	OVERRIDE DIMMER SWITCH FOR OPEN OFFICE LIGHTING. CONFIRM LOCATION WITH ARCHITECT AND FINAL FURNITURE LAYOUTS PRIOR TO ROUGH-IN.
E96	DUPLEX FOR WALL MOUNT PROJECTOR MOUNT AT 96" ABOVE WHITEBOARD COORDINATE WITH TECHNOLOGY.
E97	PROVIDE ELECTRICAL CONNECTION BETWEEN REMOTE MOUNTED VFD LOCATED IN BUILDING TO FAN DISCONNECT.
E103	REFER TO E440 FOR SECTION WITH CIRCUITING INFORMATION OF STAIRWELL FIXTURES.
E104	PROVIDE STATUS INDICATOR PILOT LIGHT WITH ENGRAVED LAMINATED SIGN READING "IN-USE LIGHT".

BRINKLEY SARGENT WIGINTON ARCHITECTS

Architect: Brinkley Sargent Wigintion Architects (972) 960-9970
Landscape: Kendall Landscape Architecture (214) 739-3226
Structural: L.A. Fuess Partners, Inc (214) 593-1118
MEP: M-E Engineers (214) 741-1589
Civil: KSA Engineers, Inc (903) 236-7700
Technology: M-E Engineers (303) 421-6656

LONGVIEW POLICE DEPARTMENT

518 W. SOUTH ST. LONGVIEW, TEXAS 75601

History		
#	Date	Description

STATE OF TEXAS
ANDREW SHIVLEY
109010
LICENSED
PROFESSIONAL ENGINEER
ME Engineers, Inc.
F-10231
08/19/2020

LEVEL 3 - REFLECTED CEILING LIGHTING PLAN - WEST

20513
08/19/2020
E431

BID ISSUE

8/17/2020 12:18:29 PM

C:\Revit Projects\2019\LPD_CENTRAL_ETX_Revit-MEP\E431.rvt

© 2020 Brinkley Sargent Wigginton Architects, Inc.

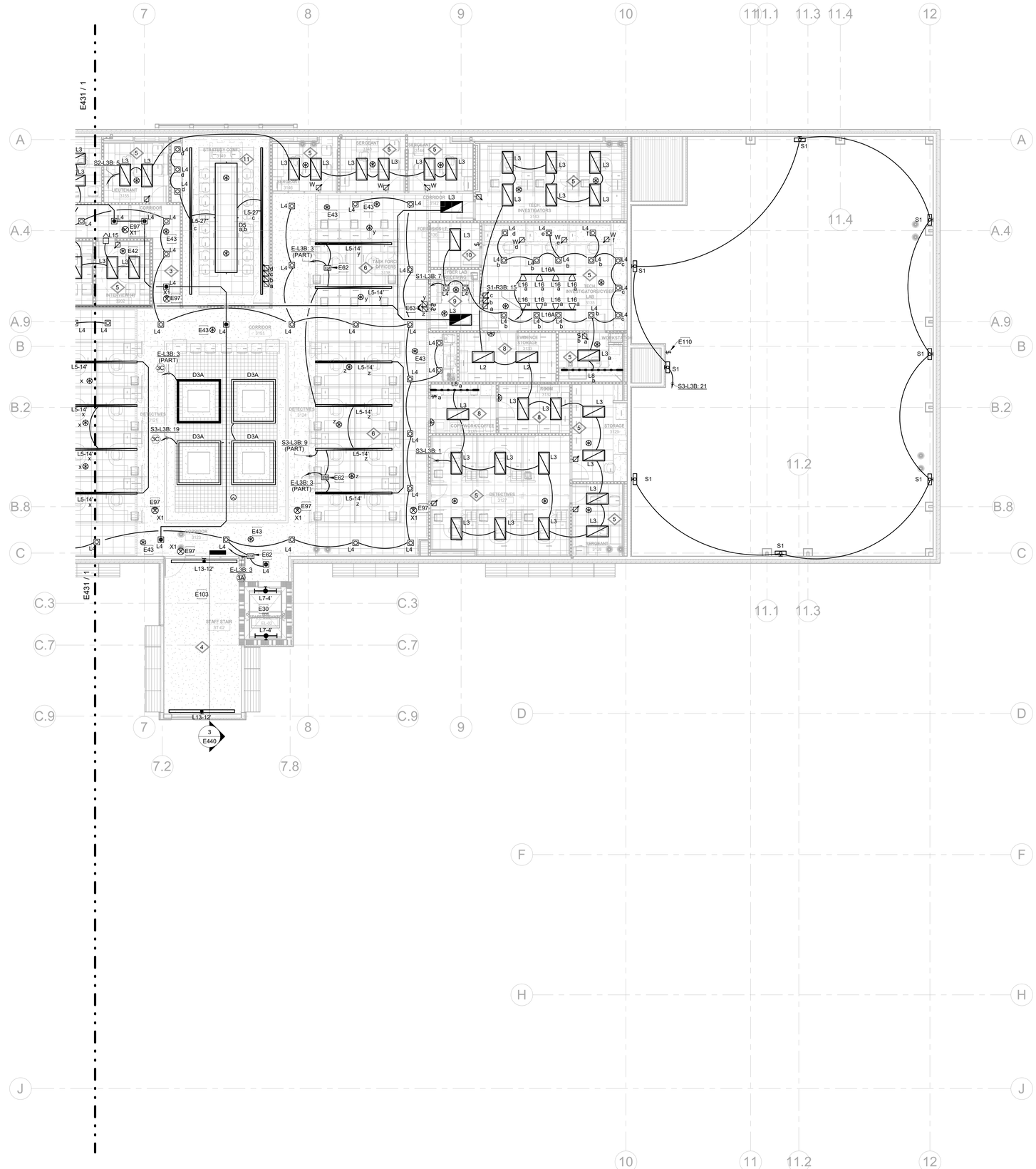

1 LEVEL 3 - REFLECTED CEILING LIGHTING PLAN - EAST
1/8" = 1'-0"

GENERAL NOTES:

1. REFER TO SHEET E040 FOR LIGHT FIXTURE SCHEDULE AND E041 FOR LIGHTING CONTROL MATRIX.
2. REFER TO ARCHITECTURAL REFLECTED CEILING PLANS FOR ALL FIXTURE LOCATIONS WITHIN A CEILING OR CEILING GRID. FOR AREAS WITHOUT CEILINGS, FIXTURE LOCATIONS ARE DIAGRAMMATIC. THE INTENT IS TO ALIGN, CENTER, OR SPACE FIXTURES BETWEEN ARCHITECTURAL AND STRUCTURAL ELEMENTS.
3. ALL EXPOSED CONDUIT SHALL BE ROUTED PERPENDICULAR, PARALLEL, AND TIGHT TO COLUMNS AND BEAMS. ALL EXPOSED CONDUIT ROUTING SHALL BE COORDINATED WITH THE ARCHITECT PRIOR TO INSTALLATION AND INSTALLED IN A NEAT AND CONSISTENT MANNER. NO ADDITIONAL COST TO OWNER WILL BE ALLOWED FOR RELOCATING CONDUIT DUE TO THE LACK OF COORDINATION WITH ARCHITECT. ALL SURFACE MOUNTED CONDUIT WHERE EXPOSED TO PUBLIC AREAS SHALL BE PAINTED. PAINT COLOR TO BE DETERMINED BY THE ARCHITECT.
4. FIELD VERIFY EXACT FIXTURE LENGTHS FOR CONTINUOUS ILLUMINATION FOR COVES AND LINEAR RUNS. PROVIDE CONTINUOUS ILLUMINATION WITH NO MORE THAN A 6" GAP BETWEEN THE END OF THE EDGE OF THE WALL / CEILING AND THE FIXTURE.
5. ELECTRICAL CONTRACTOR TO COORDINATE WITH MECHANICAL CONTRACTOR FOR PLACEMENT OF FIXTURES WITHIN MECHANICAL ROOMS.
6. ALL EXIT LIGHTS OF ALL TYPES SHALL BE MOUNTED AT 8'-0" AFF UNLESS OTHERWISE NOTED. PROVIDE EXIT SIGNS IN ALL PATH OF EGRESS. THERE SHOULD NOT BE MORE THAN 80' SPACING BETWEEN EXIT SIGNS.
7. HALF OF LIGHT FIXTURES IN STAIRWAYS SHALL BE ON EMERGENCY POWER AND HALF ON "TIER 1 STAND-BY POWER.
8. PROVIDE A LIGHTING CONTROL SYSTEM WHICH MEETS THE REQUIREMENTS OF THE ADOPTED ENERGY CODE, INCLUDING BUT NOT LIMITED TO THE FOLLOWING:

   a. COMPUTER CONTROLLED LIGHTING CONTROL SYSTEM PER THE SPECIFICATIONS.

   b. LOW VOLTAGE OVERRIDES READILY ACCESSIBLE FOR NORMALLY OCCUPIED SPACES. ONE CONTROL FOR EVERY 5000 SF OF SPACE.

   c. ALL CONFERENCE ROOMS, OFFICES, BREAK ROOMS AND MEETING ROOMS SHALL HAVE DUAL TECHNOLOGY OCCUPANCY SENSORS.
9. THE LIGHTING CONTROL SYSTEM SHALL INCLUDE PROVISIONS FOR SERVING THE FACILITY'S EGRESS/EXIT LIGHTING AND SHALL BE UL 924 LISTED.
10. COORDINATE UNDERCABINET LIGHTS, L8 TYPE, WITH MILLWORK. REFER TO ARCHITECTURAL PLANS FOR DETAIL. PROVIDE LENGTHS AND MOUNTING EQUIPMENT AS REQUIRED.
11. PROVIDE NECESSARY QUANTITY OF OCCUPANCY SENSORS TO COVER 90% OF SPACES INDICATED.

KEYNOTES

E30	MOUNT FIXTURES AT TOP OF ELEVATOR SHAFT. REFER TO E231/E340 SERIES FOR ELEVATOR CIRCUITING INFORMATION.
E42	OCCUPANCY SENSOR TO CONTROL IN-USE SIGN AS WELL AS OVERHEAD LIGHTING.
E43	PROVIDE OCCUPANCY SENSORS IN CORRIDOR FOR AFTERHOURS OVERRIDE.
E62	PROVIDE LOCAL UL924 DEVICE SO EMERGENCY LIGHTING CAN BE CONTROLLED WITH NORMAL LIGHTING OF SIMILAR ZONE. LIGHTS TO COME FULL ON UPON LOSS OF POWER.
E63	OVERRIDE DIMMER SWITCH FOR OPEN OFFICE LIGHTING. CONFIRM LOCATION WITH ARCHITECT AND FINAL FURNITURE LAYOUTS PRIOR TO ROUGH-IN.
E97	PROVIDE ELECTRICAL CONNECTION BETWEEN REMOTE MOUNTED VFD LOCATED IN BUILDING TO FAN DISCONNECT.
E103	REFER TO E440 FOR SECTION WITH CIRCUITING INFORMATION OF STAIRWELL FIXTURES.
E110	PROVIDE WP SWITCH AT LADDED LOCATION FOR CONTROL OF ROOF MAINTENANCE LIGHITNG.

Architect: Brinkley Sargent Wigginton Architects (972) 960-9970
Landscape: Kendall Landscape Architecture (214) 739-3226
Structural: L.A. Fuess Partners, Inc (214) 593-1118
MEP: M-E Engineers (214) 741-1589
Civil: KSA Engineers, Inc (903) 236-7700
Technology: M-E Engineers (303) 421-6656

BRINKLEY SARGENT WIGINTON ARCHITECTS

LONGVIEW POLICE DEPARTMENT

518 W. SOUTH ST. LONGVIEW, TEXAS 75601

History		
#	Date	Description

ME Engineers, Inc.
F-10231
08/19/2020

LEVEL 3 - REFLECTED CEILING LIGHTING PLAN - EAST

20513
08/19/2020

E432

BID ISSUE

6/17/2020 12:18:38 PM

C:\Revit Projects\2015\JRL_CENTRAL_E19_Demo.rvt\ms29761.rvt

© 2020 Brinkley Sargent Wigginton Architects, Inc.

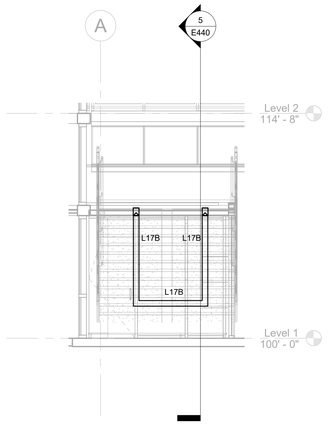

6 LOBBY STAIR LTG
1/4" = 1'-0"

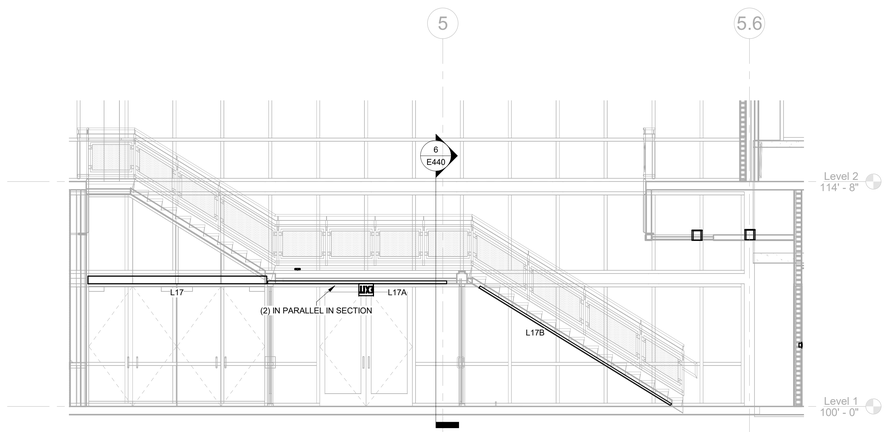

5 ENTRY LTG
1/4" = 1'-0"

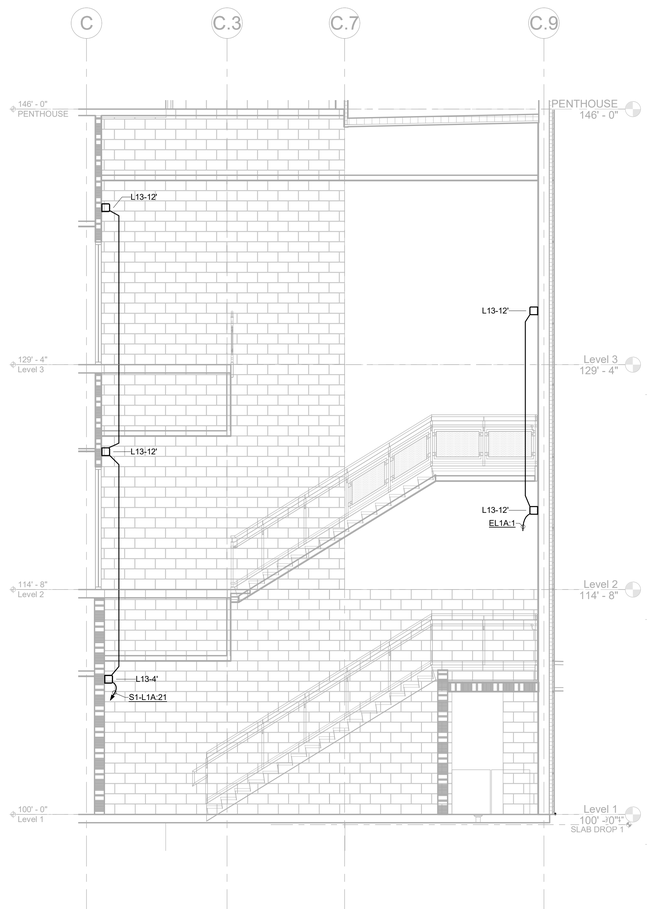

3 STAFF STAIR 02 - WEST LIGHTING SECTION1
1/4" = 1'-0"

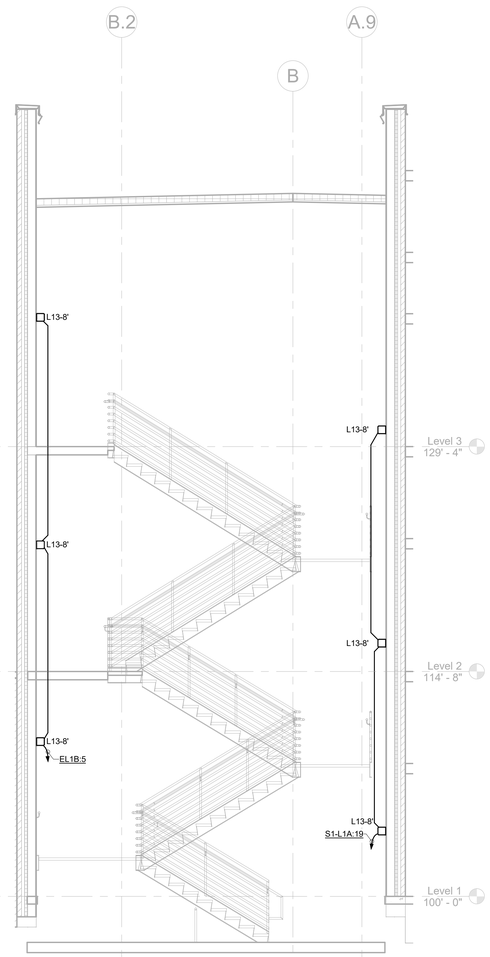

1 STAIR 03 LIGHTING SECTION
1/4" = 1'-0"

Architect: Brinkley Sargent Wigginton Architects (972) 960-9970
Landscape: Kendall Landscape Architecture (214) 739-3226
Structural: L.A. Fuess Partners, Inc (214) 593-1118
MEP: M-E Engineers (214) 741-1589
Civil: KSA Engineers, Inc (903) 236-7700
Technology: M-E Engineers (303) 421-6656

BRINKLEY SARGENT WIGINTON ARCHITECTS

LONGVIEW POLICE DEPARTMENT

518 W. SOUTH ST. LONGVIEW, TEXAS 75601

History		
#	Date	Description

STATE OF TEXAS
ANDREW SHIVLEY
109010
LICENSED
PROFESSIONAL ENGINEER
ME Engineers, Inc.
F-10231
08/19/2020

LIGHTING SECTIONS

BID ISSUE

20513
08/19/2020
E440

8/17/2020 9:51:12 AM

C:\Revit Projects\2013\LYPD_CENTRAL_E19_Demo.Wrap3PSE.rvt

© 2020 Brinkley Sargent Wigginton Architects, Inc.

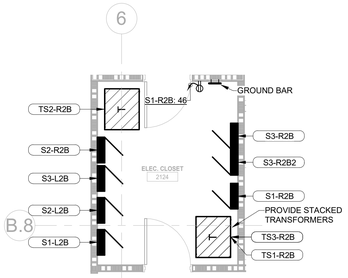

5 LEVEL 2 - ELECTRICAL ENLARGED PLAN - ELECTRICAL CLOSET
1/4" = 1'-0"

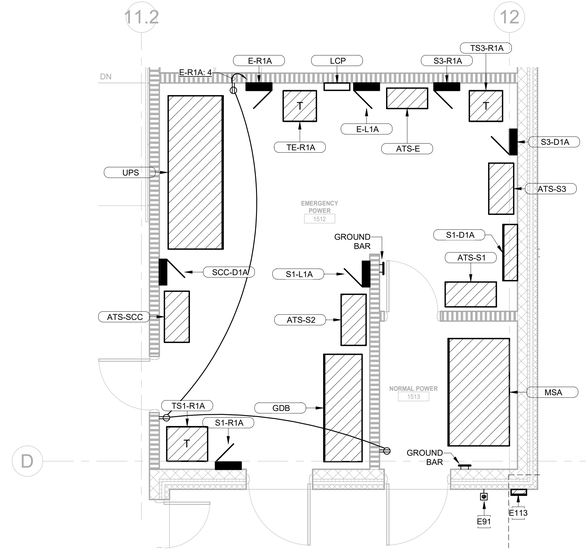

1 LEVEL 1 - ELECTRICAL ENLARGED PLAN - MAIN ELECTRICAL ROOMS
1/4" = 1'-0"

GENERAL NOTES:

1. ELECTRICAL CONTRACTOR SHALL COORDINATE EXACT LOCATION OF ALL MECHANICAL UNITS WITH MECHANICAL CONTRACTOR.

2. ALL EXPOSED CONDUIT SHALL BE ROUTED PERPENDICULAR, PARALLEL, AND TIGHT TO COLUMNS AND BEAMS. ALL EXPOSED CONDUIT ROUTING SHALL BE COORDINATED WITH THE ARCHITECT PRIOR TO INSTALLATION AND INSTALLED IN A NEAT AND CONSISTENT MANNER. NO ADDITIONAL COST TO OWNER WILL BE ALLOWED FOR RELOCATING CONDUIT DUE TO THE LACK OF COORDINATION WITH ARCHITECT. ALL SURFACE MOUNTED CONDUIT WHERE EXPOSED TO PUBLIC AREAS SHALL BE PAINTED. PAINT COLOR TO BE DETERMINED BY THE ARCHITECT.

3. ALL BACK BOXES SHALL BE FLUSH MOUNTED UNLESS NOTED OTHERWISE. ALL VERTICAL SECTIONS OF CONDUIT SHALL BE CONCEALED. CONTRACTOR SHALL COORDINATE INSTALLATION OF CONDUIT AND BACK BOXES IN CONCRETE, MASONRY AND GYP. WALLS.

4. THIS CONTRACTOR SHALL REFER TO "M" AND "P" SERIES DRAWINGS FOR ALL MECHANICAL EQUIPMENT ELECTRICAL CONNECTIONS.

5. CIRCUITS TO ALL MECHANICAL EQUIPMENT SHALL BE DEDICATED UNLESS NOTED OTHERWISE.

6. WALL MOUNTED TVS INSTALLATION TO NOT PROTRUDE MORE THAN 4" WHEN INSTALLED BETWEEN 27"-80" HIGH. REFER TO ARCHITECTURAL DRAWINGS FOR FINAL ELEVATIONS.

KEYNOTES

E35	PROVIDE REMOTE DRIVER ENCLOSURE FOR ALL D3 AND D3A LIGHT FIXTURE DRIVERS, ESSENTIAL LED'S DRIVER POWER PANEL 9X235 SERIES OR APPROVED EQUAL. PROVIDE SIZE PANEL REQUIRED FOR QUANTITY OF DRIVERS NEEDED.
E41	PROVIDE DEDICATED 120V/20A CIRCUIT FOR SECURITY PANEL. COORDINATE LOCATION WITH DIVISION 27 PRIOR TO ROUGH-IN.
E91	REMOTE EMERGENCY PUSH BUTTON FOR GENERATOR. COORDINATE FINAL LOCATION WITH ENGINEER AND OWNER PRIOR TO ROUGH-IN.
E113	UTILITY METER. EXACT LOCATION AND REQUIREMENTS FOR RACEWAY AND BOXES TO BE COORINDATED WITH UTILITY PROVIDER.

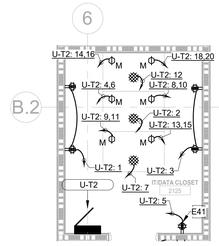

6 LEVEL 2 - ELECTRICAL ENLARGED PLAN - IT/DATA CLOSET 2125
1/4" = 1'-0"

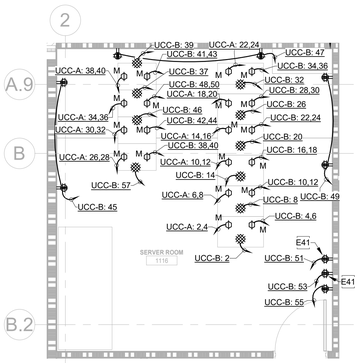

2 LEVEL 1 - ELECTRICAL ENLARGED PLAN - SERVER ROOM 1116
1/4" = 1'-0"

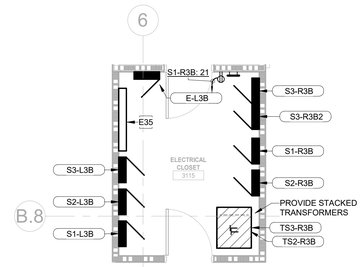

7 LEVEL 3 - ELECTRICAL ENLARGED PLAN - ELECTRICAL CLOSET
1/4" = 1'-0"

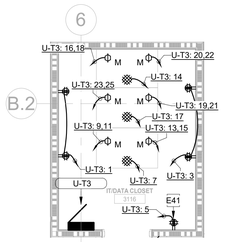

8 LEVEL 3 - ELECTRICAL ENLARGED PLAN - IT/DATA CLOSET 3116
1/4" = 1'-0"

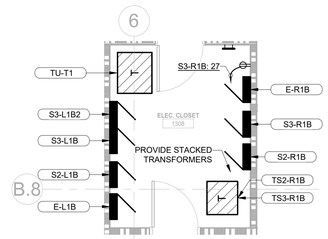

3 LEVEL 1 - ELECTRICAL ENLARGED PLAN - ELECTRICAL CLOSET
1/4" = 1'-0"

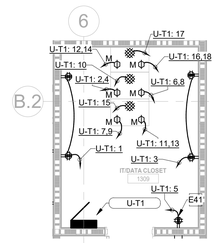

4 LEVEL 1 - ELECTRICAL ENLARGED PLAN - IT/DATA CLOSET 1309
1/4" = 1'-0"

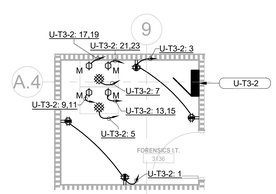

9 LEVEL 3 - ELECTRICAL ENLARGED PLAN - FORENSICS IT 3136
1/4" = 1'-0"

Architect: Brinkley Sargent Wigginton Architects (972) 960-9970
Landscape: Kendall Landscape Architecture (214) 739-3226
Structural: L.A. Fuess Partners, Inc (214) 593-1118
MEP: M-E Engineers (214) 741-1589
Civil: KSA Engineers, Inc (903) 236-7700
Technology: M-E Engineers (303) 421-6656

BRINKLEY SARGENT WIGGINTON ARCHITECTS

LONGVIEW POLICE DEPARTMENT

518 W. SOUTH ST. LONGVIEW, TEXAS 75601

History		
#	Date	Description

STATE OF TEXAS
ANDREW SHIVLEY
109010
LICENSED
PROFESSIONAL ENGINEER

ME Engineers, Inc.
F-10231
08/19/2020

ELECTRICAL ENLARGED PLAN

BID ISSUE

20513
08/19/2020

E501

C:\Revit Projects\2015\LPD_CENTRAL_E15_Series-michael2015.rvt
8/17/2020 9:31:23 AM

© 2020 Brinkley Sargent Wigginton Architects, Inc.

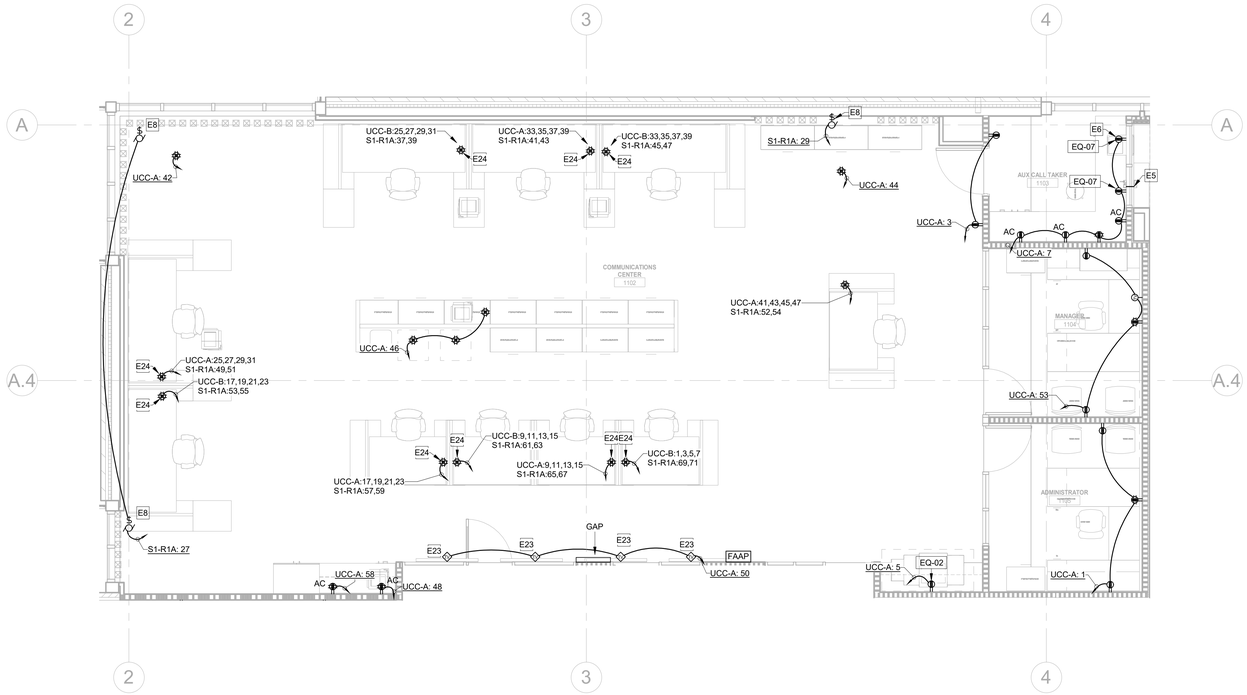

1 LEVEL 1 - ELECTRICAL ENLARGED PLAN - COMMUNICATIONS CENTER
1/4" = 1'-0"

GENERAL NOTES:

1. ELECTRICAL CONTRACTOR SHALL COORDINATE EXACT LOCATION OF ALL MECHANICAL UNITS WITH MECHANICAL CONTRACTOR.

2. ALL EXPOSED CONDUIT SHALL BE ROUTED PERPENDICULAR, PARALLEL, AND TIGHT TO COLUMNS AND BEAMS. ALL EXPOSED CONDUIT ROUTING SHALL BE COORDINATED WITH THE ARCHITECT PRIOR TO INSTALLATION AND INSTALLED IN A NEAT AND CONSISTENT MANNER. NO ADDITIONAL COST TO OWNER WILL BE ALLOWED FOR RELOCATING CONDUIT DUE TO THE LACK OF COORDINATION WITH ARCHITECT. ALL SURFACE MOUNTED CONDUIT WHERE EXPOSED TO PUBLIC AREAS SHALL BE PAINTED. PAINT COLOR TO BE DETERMINED BY THE ARCHITECT.

3. ALL BACK BOXES SHALL BE FLUSH MOUNTED UNLESS NOTED OTHERWISE. ALL VERTICAL SECTIONS OF CONDUIT SHALL BE CONCEALED. CONTRACTOR SHALL COORDINATE INSTALLATION OF CONDUIT AND BACK BOXES IN CONCRETE, MASONRY AND GYP. WALLS.

4. THIS CONTRACTOR SHALL REFER TO "M" AND "P" SERIES DRAWINGS FOR ALL MECHANICAL EQUIPMENT ELECTRICAL CONNECTIONS.

5. CIRCUITS TO ALL MECHANICAL EQUIPMENT SHALL BE DEDICATED UNLESS NOTED OTHERWISE.

6. WALL MOUNTED TVS INSTALLATION TO NOT PROTRUDE MORE THAN 4" WHEN INSTALLED BETWEEN 27"-80" HIGH. REFER TO ARCHITECTURAL DRAWINGS FOR FINAL ELEVATIONS.

KEYNOTES

E5	PROVIDE (1) ¾" CONDUIT STUBBED THROUGH WALL FOR CONNECTION BETWEEN INTERCOM SPEAKER MICROPHONE SYSTEM. COORDINATE HEIGHT WITH ARCHITECT AT FURNITURE SUBMISSION.
E6	COORDINATE MOUNTING HEIGHT WITH ARCHITECT AT FURNITURE SUBMISSION.
E8	PROVIDE 120V POWER TO MOTORIZED SHADES. PROVIDE ALL CONDUIT, WIRE, AND CONTROLS NECESSARY FOR OPERATION. ASSUME SHADES ARE CONTROLLED VIA LIGHTING CONTROL DEVICE IN SPACE. COORDINATE WITH ARCHITECT FOR NUMBER OF MOTORIZED SHADE CONNECTION POINTS.
E23	MOUNT TV OUTLETS ON FACE OF BULKHEAD WALL BEHIND TV. VERIFY LOCATION WITH OWNER AND ARCHITECT PRIOR TO ROUGH-IN.
E24	PROVIDE LEGRAND EFB10S-OG OR APPROVED EQUAL. FINAL PLACEMENT OF RAISED FLOOR FLOORBOXES IS TO BE COORDINATED WITH FURNITURE VENDOR AND ARCHITECT.
E71	COORDINATE ELECTRICAL CONNECTION FOR FUME HOOD WITH EQUIPMENT MANUFACTURER PRIOR TO ROUGH-IN.

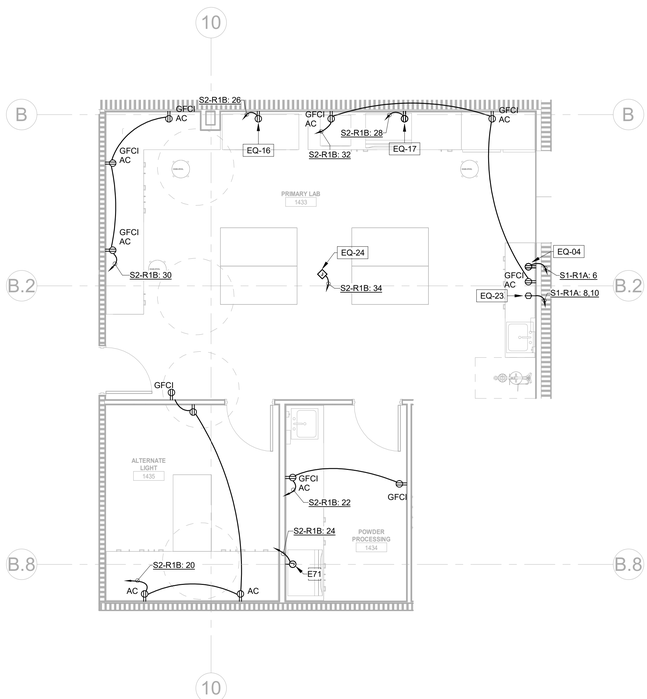

5 LEVEL 1 - ELECTRICAL ENLARGED PLAN - PRIMARY LAB
1/4" = 1'-0"

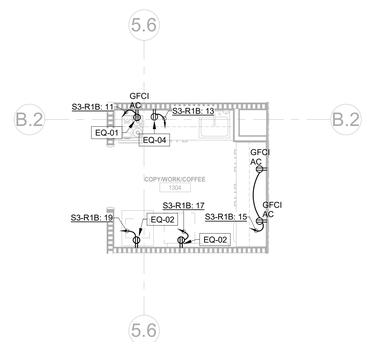

2 LEVEL 1 - ELECTRICAL ENLARGED PLAN - COPY/WORK/COFFEE 1305
1/4" = 1'-0"

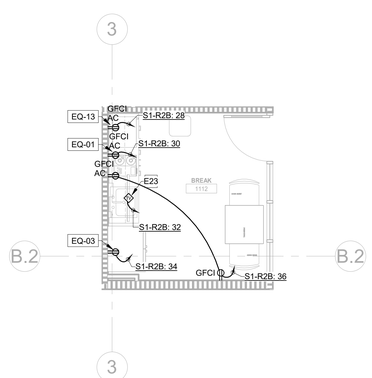

4 LEVEL 1 - ELECTRICAL ENLARGED PLAN - BREAK 1112
1/4" = 1'-0"

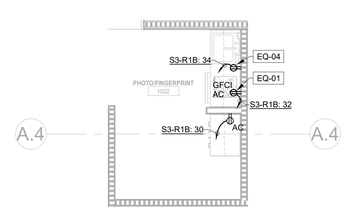

3 LEVEL 1 - ELECTRICAL ENLARGED PLAN - PHOTO/FINGERPRINT 1022
1/4" = 1'-0"

BRINKLEY SARGENT WIGINTON ARCHITECTS

Architect: Brinkley Sargent Wigginton Architects (972) 960-9970
Landscape: Kendall Landscape Architecture (214) 739-3226
Structural: L.A. Fuess Partners, Inc (214) 593-1118
MEP: M-E Engineers (214) 741-1589
Civil: KSA Engineers, Inc (903) 236-7700
Technology: M-E Engineers (303) 421-6656

LONGVIEW POLICE DEPARTMENT

518 W. SOUTH ST. LONGVIEW, TEXAS 75601

History		
#	Date	Description

ANDREW SHIVLEY
109010
LICENSED PROFESSIONAL ENGINEER
ME Engineers, Inc.
F-10231
08/19/2020

ELECTRICAL ENLARGED PLAN

20513
08/19/2020
E502

BID ISSUE

8/17/2020 9:51:31 AM

C:\Revit Projects\2018\PD_CENTRAL_EIB_Demo.Revit\P01.rvt

© 2020 Brinkley Sargent Wigginton Architects, Inc.

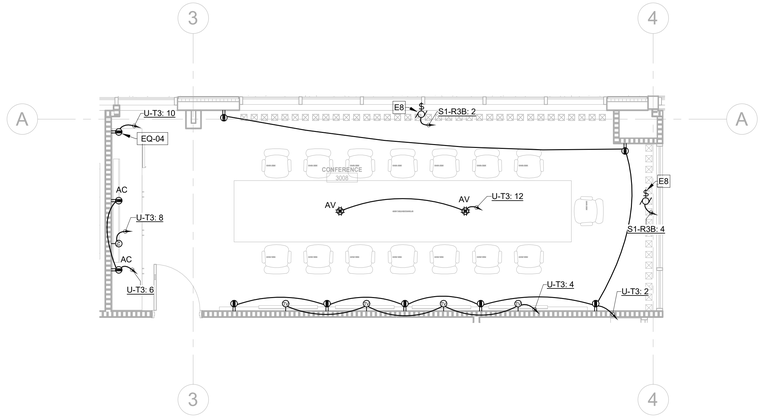

6 LEVEL 3 - ELECTRICAL ENLARGED PLAN - CONFERENCE 3008
1/4" = 1'-0"

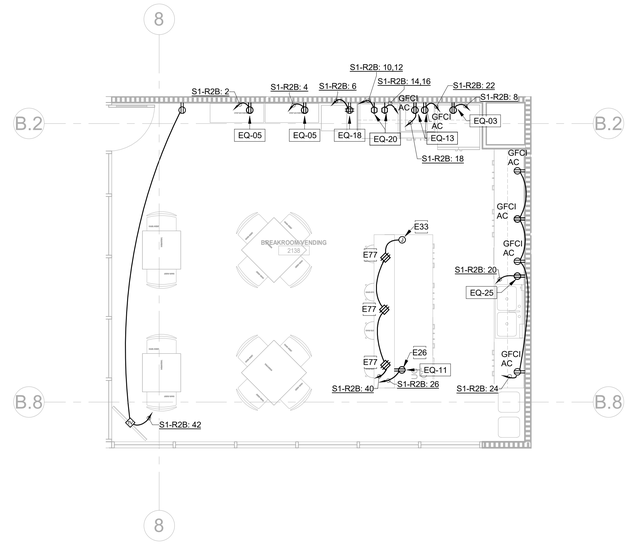

1 LEVEL 2 - ELECTRICAL ENLARGED PLAN - BREAKROOM/VENDING 2137
1/4" = 1'-0"

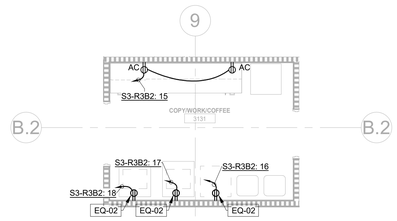

4 LEVEL 3 - ELECTRICAL ENLARGED PLAN - COPY/WORK/COFFEE 3127
1/4" = 1'-0"

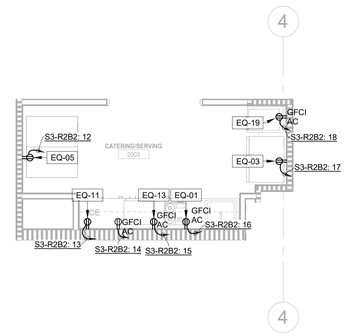

2 LEVEL 2 - ELECTRICAL ENLARGED PLAN - CATERING/SERVING 2003
1/4" = 1'-0"

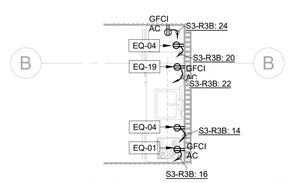

5 LEVEL 3 - ELECTRICAL ENLARGED PLAN - CORRIDOR 3125
1/4" = 1'-0"

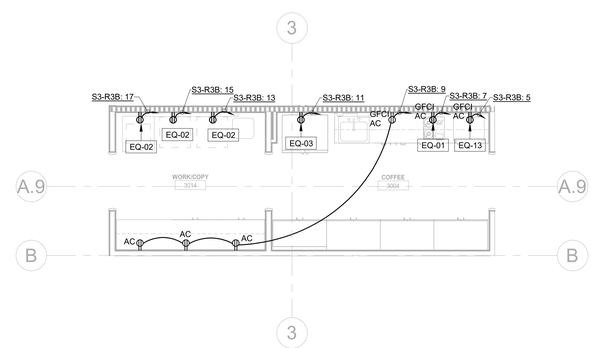

3 LEVEL 3 - ELECTRICAL ENLARGED PLAN - COFFEE 3004
1/4" = 1'-0"

GENERAL NOTES:

1. ELECTRICAL CONTRACTOR SHALL COORDINATE EXACT LOCATION OF ALL MECHANICAL UNITS WITH MECHANICAL CONTRACTOR.

2. ALL EXPOSED CONDUIT SHALL BE ROUTED PERPENDICULAR, PARALLEL, AND TIGHT TO COLUMNS AND BEAMS. ALL EXPOSED CONDUIT ROUTING SHALL BE COORDINATED WITH THE ARCHITECT PRIOR TO INSTALLATION AND INSTALLED IN A NEAT AND CONSISTENT MANNER. NO ADDITIONAL COST TO OWNER WILL BE ALLOWED FOR RELOCATING CONDUIT DUE TO THE LACK OF COORDINATION WITH ARCHITECT. ALL SURFACE MOUNTED CONDUIT WHERE EXPOSED TO PUBLIC AREAS SHALL BE PAINTED. PAINT COLOR TO BE DETERMINED BY THE ARCHITECT.

3. ALL BACK BOXES SHALL BE FLUSH MOUNTED UNLESS NOTED OTHERWISE. ALL VERTICAL SECTIONS OF CONDUIT SHALL BE CONCEALED. CONTRACTOR SHALL COORDINATE INSTALLATION OF CONDUIT AND BACK BOXES IN CONCRETE, MASONRY AND GYP. WALLS.

4. THIS CONTRACTOR SHALL REFER TO "M" AND "P" SERIES DRAWINGS FOR ALL MECHANICAL EQUIPMENT ELECTRICAL CONNECTIONS.

5. CIRCUITS TO ALL MECHANICAL EQUIPMENT SHALL BE DEDICATED UNLESS NOTED OTHERWISE.

6. WALL MOUNTED TV'S INSTALLATION TO NOT PROTRUDE MORE THAN 4" WHEN INSTALLED BETWEEN 27"-80" HIGH. REFER TO ARCHITECTURAL DRAWINGS FOR FINAL ELEVATIONS.

KEYNOTES

E8	PROVIDE 120V POWER TO MOTORIZED SHADES. PROVIDE ALL CONDUIT, WIRE, AND CONTROLS NECESSARY FOR OPERATION. ASSUME SHADES ARE CONTROLLED VIA LIGHTING CONTROL DEVICE IN SPACE. COORDINATE WITH ARCHITECT FOR NUMBER OF MOTORIZED SHADE CONNECTION POINTS.
E26	PROVIDE DEDICATED 120V/20A CIRCUIT. RECEPTACLE TO BE MOUNTED ON MILLWORK WALL. COORDIATE WITH ARCHITECT PRIOR TO ROUGH-IN.
E33	RECESSED FLOORBOX FOR POWER TO ISLAND. COORDINATE LOCATION WITH ARCHITECT AND MILLWORK PROVIDER DURING CONSTRUCTION ROUGH-IN PROCESS TO ALIGN WITH MILLWORK POWER ENTRANCE WINDOWS.
E77	PROVIDE TABLETOP MOUNTED, RECESSED, POP-UP, DUPLEX USB 20A RECEPTACLE. LEGRAND MODEL TB672PP OR APPROVED EQUAL. THIS CONTRACTOR IS TO COORDINATE WITH MILLWORK INSTALLER TO PROVIDE CABLING AND RECEPTACLES, WITHIN MILLWORK, FOR LIMITED RUN LENGTHS OF THE PRODUCT LINE SIDE PLUG.

BRINKLEY SARGENT WIGINTON ARCHITECTS

Architect: Brinkley Sargent Wigginton Architects (972) 960-9970
Landscape: Kendall Landscape Architecture (214) 739-3226
Structural: L.A. Fuess Partners, Inc (214) 593-1118
MEP: M-E Engineers (214) 741-1589
Civil: KSA Engineers, Inc (903) 236-7700
Technology: M-E Engineers (303) 421-6656

LONGVIEW POLICE DEPARTMENT

518 W. SOUTH ST. LONGVIEW, TEXAS 75601

History		
#	Date	Description

STATE OF TEXAS
ANDREW SHIVLEY
109010
LICENSED
PROFESSIONAL ENGINEER
ME Engineers, Inc.
F-10231
08/19/2020

ELECTRICAL ENLARGED PLAN

20513
08/19/2020
E503

BID ISSUE

8/17/2020 12:18:44 PM

C:\Revit Projects\2018\LPD_CENTRAL_EYB_Demo.Revit\P3E.rvt

© 2020 Brinkley Sargent Wiginton Architects, Inc.

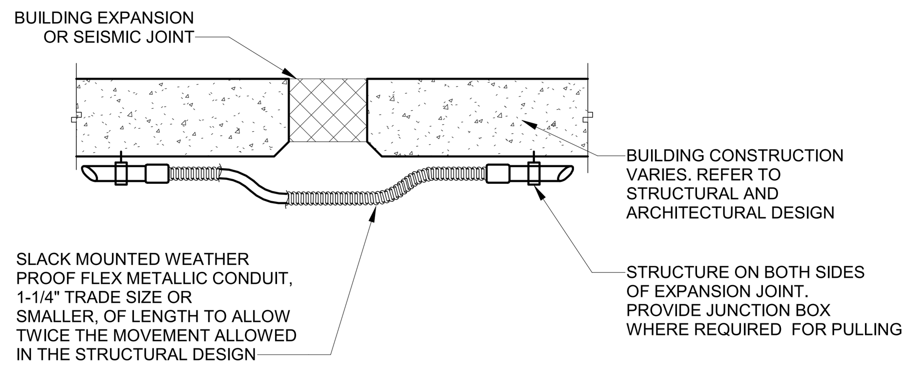

FLEX CONDUIT EXPANSION/DEFLECTION

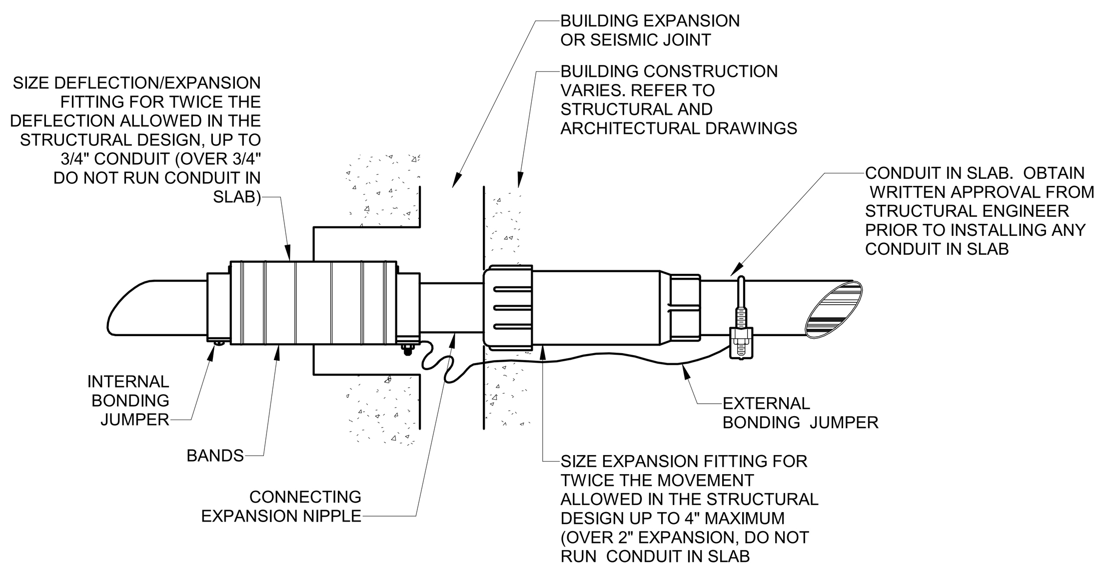

COMBINATION EXPANSION/DEFLECTION FITTING IN SLAB

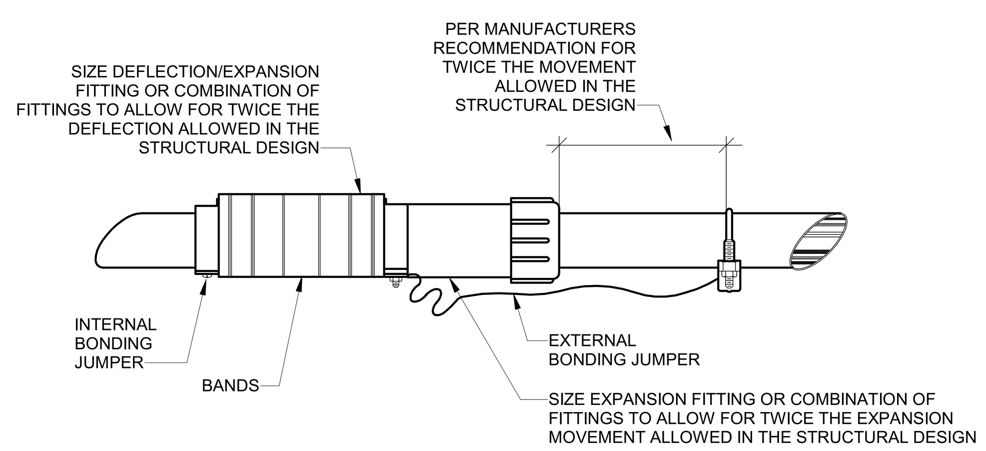

9 SEISMIC EXPANSION FITTING
NO SCALE

GENERAL NOTES:

1. COMBINATION POKE-THROUGH DEVICE FOR HOUSING POWER, AUDIO/VIDEO AND COMMUNICATIONS DEVICES. REFER TO DIV.26 WIRING DEVICES SPECIFICATION SECTION FOR ADDITIONAL REQUIREMENTS.
2. ALL DATA CONDUITS SHALL BE ROUTED TO NEAREST COMM ROOM OR CABLE TRAY, U.N.O. REFER TO DEVICE SYMBOL NOTES ON TECHNOLOGY LEGEND TO CONFIRM IF CONDUIT SHALL STOP AT ACCESSIBLE CEILING SPACE.

KEYNOTES:

1. FLOOR BOX: PROVIDE POKE-THROUGH DEVICE PER DIV.26 WIRING DEVICES SPECIFICATION.
2. MOUNTING PLATE: PROVIDE (1) MOUNTING PLATE WITH STYLE-LINE (DECORA) FRAME OPENING FOR DATA OUTLETS. ADDITIONALLY, PROVIDE AV CONNECTION MOUNTING PLATES AND/OR BLANKS AS REQUIRED.
3. POWER: RECEPTACLES AND CONDUIT SHOWN FOR REFERENCE.
4. LOW VOLTAGE CONDUIT: PROVIDE (1) 1-1/4" CONDUIT FOR LOW VOLTAGE CABLING AT EACH APPLICABLE POKE-THROUGH DEVICE.

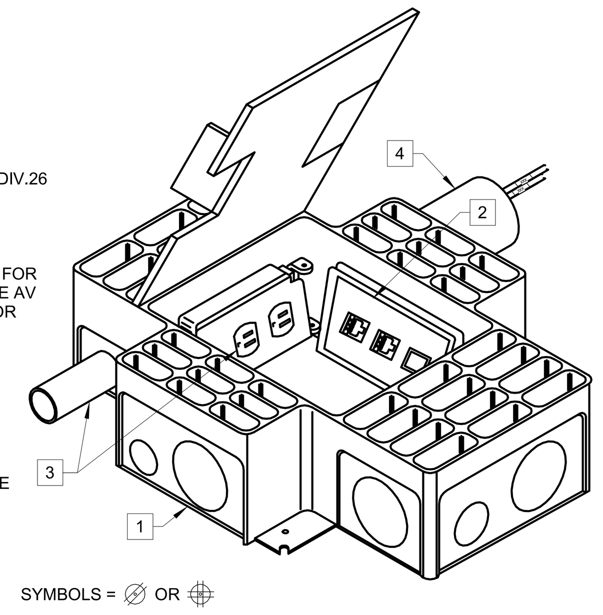

SYMBOLS = ⌀ OR ⊕

5 (PF) STANDARD CAST-IN-PLACE FLOOR BOX
NO SCALE

KEYNOTES:

1. RACEWAY : PROVIDE 1-1/4" x 4-1/4" GALVANIZED STEEL SURFACE MOUNTED RACEWAY COMPLETE WITH COVER. VERIFY COLOR WITH ARCHITECT.
2. SINGLE-GANG COVER : PROVIDE METALLIC SINGLE GANG DUPLEX RECEPTACLE COVER PLATE. VERIFY COLOR WITH ARCHITECT.
3. DUAL-GANG COVER : PROVIDE METALLIC DOUBLE GANG DUPLEX RECEPTACLE COVER PLATE. VERIFY COLOR WITH ARCHITECT.
4. DIVIDER: PROVIDE STEEL COMPARTMENT DIVIDER.
5. TRIM PLATE : PROVIDE BLANK 106-STYLE MODULE TO FILL LOW VOLTAGE SIDE.
6. POWER: ELECTRICAL CABLE AND DEVICES SHOWN FOR REFERENCE ONLY.
7. LOW-VOLTAGE CONDUIT AND BACK-BOX : FOR EVERY (5) DEVICE POSITIONS, PROVIDE (1) 6"X6"X2-1/2" BACK-BOX WITH (1) 1-1/2 INCH CONDUIT MOUNTED FLUSH IN WALL DIRECTLY BEHIND SURFACE MOUNTED RACEWAY (BELOW COUNTER). CONDUIT SHALL BE ROUTED TO NEAREST CABLE TRAY OR COMM ROOM FOR COMMUNICATIONS DISTRIBUTION TOSURFACE MOUNTED RACEWAY.
8. POWER CONDUIT AND BACK-BOX : PROVIDE BACK-BOX WITH CONDUIT MOUNTED FLUSH IN WALL DIRECTLY BEHIND SURFACE MOUNTED RACEWAY FOR ALL POWER HOME RUNS (CONDUIT SIZE PER PLAN DRAWINGS).

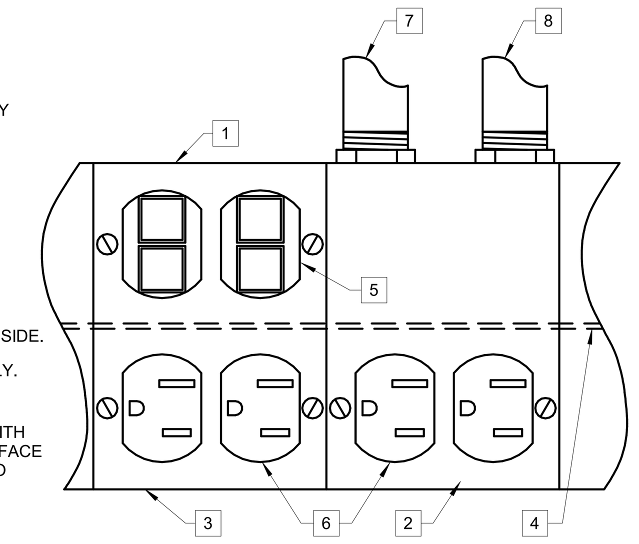

SYMBOLS =

1 SURFACE RACEWAY POWER/COMMUNICATIONS DEVICE
NO SCALE

GENERAL NOTES:

1. COMBINATION POKE-THROUGH DEVICE FOR ROUTING POWER AND COMMUNICATIONS CABLES TO MODULAR FURNITURE. REFER TO DIV.26 WIRING DEVICES SPECIFICATION SECTION FOR ADDITIONAL REQUIREMENTS.
2. ALL DATA CONDUITS SHALL BE ROUTED TO NEAREST COMM ROOM OR CABLE TRAY, U.N.O. REFER TO DEVICE SYMBOL NOTES ON TECHNOLOGY LEGEND TO CONFIRM IF CONDUIT SHALL STOP AT ACCESSIBLE CEILING SPACE.

KEYNOTES:

1. FLOOR-BOX : PROVIDE CAST-IN-PLACE DEVICE WITH SYSTEM DIVIDER, PER DIV.26 WIRING DEVICES SPECIFICATION.
2. POWER CONDUIT : PROVIDE (1) 3/4" POWER CONDUIT AND FLEXIBLE WHIP CONNECTING TO MODULAR FURNITURE .
3. DATA CONDUIT : PROVIDE (1) 1-1/4" CONDUIT TO DEVICE FOR LOW VOLTAGE CABLE, WHERE APPLICABLE PROVIDE 2-INCH FLEXIBLE CONDUIT WHIP EXTENDED FROM COVER PLATE TO MODULAR FURNITURE.

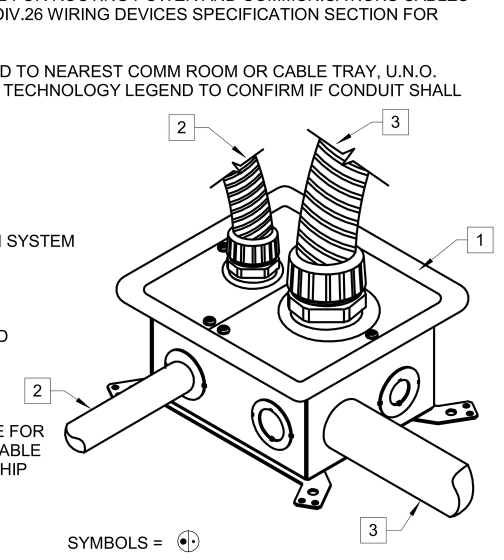

SYMBOLS =

6 FURNITURE FEED FLOOR-BOX DEVICE
NO SCALE

GENERAL NOTES:

1. CONTRACTOR TO COORDINATE TV BACKBOX LOCATIONS WITH TECHNOLOGY/AV AND ARCHITECTURAL DRAWINGS. MOUNTING HEIGHTS AND DIMENSIONAL INFORMATION TO BE COORDINATED WITH THE ARCHITECT PRIOR TO ROUGH-IN.
2. CONTRACTOR SHALL PROVIDE WEATHER PROOF COVER FOR ALL DEVICES WITH "WP" INDICATED AS PART OF SYMBOL ON PLAN DRAWINGS.

KEYNOTES:

1. BACK-BOX: TV BACKBOX AS SPECIFIED BY DIVISION 27.
2. CONDUIT: COMMUNICATIONS CONDUIT AS SPECIFIED BY DIVISION 27.
3. POWER : PROVIDE NEMA 5-20R, DUPLEX RECEPTACLE WITH INTEGRAL SURGE SUPPRESSION. PROVIDE 3/4"C. TO APPLICABLE CIRCUIT AS SHOWN ON DRAWINGS.

SYMBOLS =

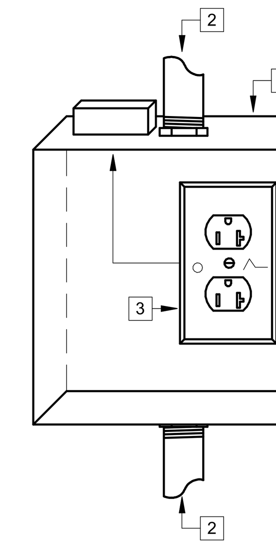

2 TV BACK BOX
NO SCALE

GENERAL NOTES:

1. COMBINATION POKE-THROUGH DEVICE FOR ROUTING POWER AND COMMUNICATIONS CABLES TO MODULAR FURNITURE. REFER TO DIV.26 WIRING DEVICES SPECIFICATION SECTION FOR ADDITIONAL REQUIREMENTS.
2. ALL DATA CONDUITS SHALL BE ROUTED TO NEAREST COMM ROOM OR CABLE TRAY, U.N.O. REFER TO DEVICE SYMBOL NOTES ON TECHNOLOGY LEGEND TO CONFIRM IF CONDUIT SHALL STOP AT ACCESSIBLE CEILING SPACE.

KEYNOTES:

1. FLOOR-BOX : PROVIDE POKE-THROUGH DEVICE WITH SYSTEM DIVIDER, PER DIV.26 WIRING DEVICES SPECIFICATION.
2. POWER CONDUIT : PROVIDE (1) 3/4" POWER CONDUIT AND FLEXIBLE WHIP CONNECTING TO MODULAR FURNITURE .
3. DATA CONDUIT : PROVIDE (1) 1-1/4" CONDUIT TO DEVICE FOR LOW VOLTAGE CABLE, WHERE APPLICABLE PROVIDE 2-INCH FLEXIBLE CONDUIT WHIP EXTENDED FROM COVER PLATE TO MODULAR FURNITURE.

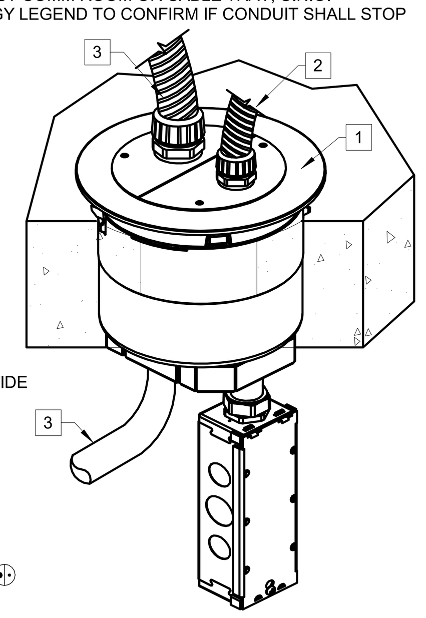

SYMBOLS =

10 (PF) FURNITURE FEED POKE-THROUGH DEVICE
NO SCALE

WIDTH AS REQUIRED

2-1/2"

MAIN DIST(NAME)
120/208V 3PH 4W
2000A
[1] (PNL. RATING)AIC, (SHORT CKT AVAIL.)AMP
[2] (DATE CALCULATED)

1/4" 1/2" 1/4" 1/4" 1/8" 1/4" 1/8" 1/4" 1/8" 1/4" 1/8"

NOTE:
1. SEE SPECIFICATIONS FOR ADDITIONAL NAMEPLATE INFORMATION.

1. INDICATE BUS BRACING VALUE AND AVAILABLE FAULT CURRENT.
2. PROVIDE AND INDICATE DATE OF CALCULATION.

7 MAIN DIST.CENTER NAMEPLATE
NO SCALE

WIDTH AS REQUIRED

2-1/2"

XFMR(NAME)
480V-120/208V 3PH 4W
75KVA
FED FROM (NAME)
[1] PRIM DISC AT ROOM # & NAME

1/4" 1/2" 1/4" 1/4" 1/8" 1/4" 1/8" 1/4" 1/8" 1/4" 1/8"

NOTE:
1. SEE SPECIFICATIONS FOR ADDITIONAL NAMEPLATE INFORMATION.

1. INDICATE LOCATION OF PRIMARY DISCONNECT

3 TRANSFORMER NAMEPLATE
NO SCALE

GENERAL NOTES:

1. COMBINATION POKE-THROUGH DEVICE FOR HOUSING POWER AND COMMUNICATIONS DEVICES. REFER TO WIRING DEVICES SPECIFICATION SECTION FOR ADDITIONAL REQUIREMENTS.
2. ALL DATA CONDUITS SHALL BE ROUTED TO NEAREST COMM ROOM OR CABLE TRAY, U.N.O. REFER TO DEVICE SYMBOL NOTES ON TECHNOLOGY LEGEND TO CONFIRM IF CONDUIT SHALL STOP AT ACCESSIBLE CEILING SPACE.

KEYNOTES:

1. FLOOR BOX : PROVIDE POKE-THROUGH DEVICE PER DIV.26 WIRING DEVICES SPECIFICATION.
2. MOUNTING PLATE: PROVIDE MOUNTING PLATE WITH STYLE-LINE (DECORA) FRAME OPENING IN CENTER FOR LOW VOLTAGE CONNECTORS. PROVIDE BLANK DECORA COVER FOR POWER ONLY FLOOR BOXES.
3. POWER: RECEPTACLES AND CONDUIT/HOUSING SHOWN FOR REFERENCE.
4. DATA CONDUIT: PROVIDE (1) 1-1/4" CONDUIT FOR LOW VOLTAGE CABLING AT EACH APPLICABLE POKE-THROUGH DEVICE.

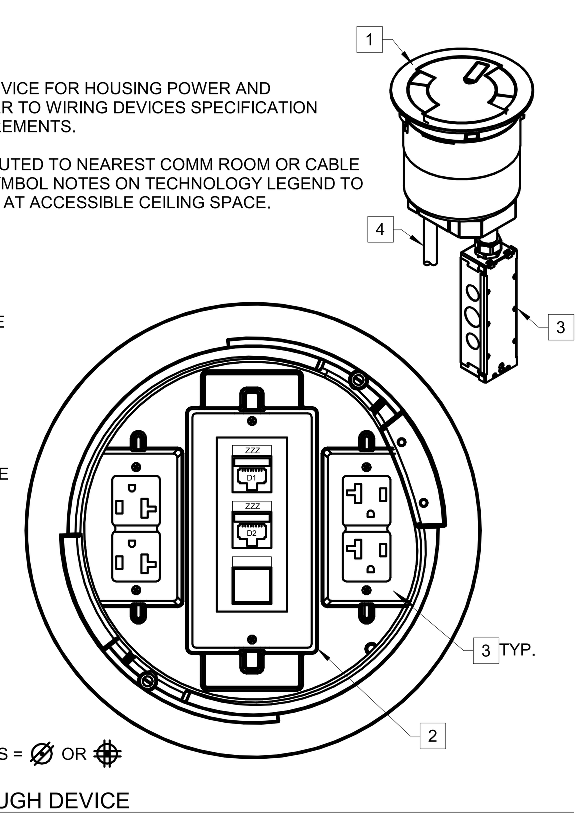

SYMBOLS = ⌀ OR ⊕

11 (PF) STANDARD POKE-THROUGH DEVICE
NO SCALE

WIDTH AS REQUIRED

2-1/2"

PANEL(NAME)
120/208V 3PH 4W
2000A
FED FROM (NAME)
[1] (PNL. RATING)AIC, (SHORT CKT AVAIL.)AMP
[2] (DATE CALCULATED)

1/8" 1/2" 1/8" 1/4" 1/8" 1/4" 1/8" 1/4" 1/8" 1/4" 1/4" 1/8"

NOTE:
1. SEE SPECIFICATIONS FOR ADDITIONAL NAMEPLATE INFORMATION.

1. INDICATE BUS BRACING VALUE AND AVAILABLE FAULT CURRENT.
2. PROVIDE AND INDICATE DATE OF CALCULATION.

8 SUB DIST. CENTER & BRANCH PANEL NAME PLATE
NO SCALE

WIDTH AS REQUIRED

2-1/2"

DISCONNECT(EQ SERVED)
480V 3PH 3W
FED FROM (NAME)
[1] (250) AMP FUSES
[2] (3#250,#4G.) 3"C

1/8" 1/2" 1/4" 1/4" 1/8" 1/4" 1/4" 1/4" 1/8" 1/4" 1/8"

NOTE:
1. SEE SPECIFICATIONS FOR ADDITIONAL NAMEPLATE INFORMATION.

1. INDICATE FUSE SIZE, IF APPLICABLE
2. INDICATE BRANCH CIRCUIT WIRESIZE

4 DISCONNECT NAMEPLATE
NO SCALE

BRINKLEY SARGENT WIGINTON ARCHITECTS

Architect: Brinkley Sargent Wiginton Architects (972) 960-9970
Landscape: Kendall Landscape Architecture (214) 739-3226
Structural: L.A. Fuess Partners, Inc (214) 593-1118
MEP: M-E Engineers (214) 741-1589
Civil: KSA Engineers, Inc (903) 236-7700
Technology: M-E Engineers (303) 421-6656

LONGVIEW POLICE DEPARTMENT

518 W. SOUTH ST. LONGVIEW, TEXAS 75601

History		
#	Date	Description

STATE OF TEXAS
ANDREW SHIVLEY
109010
LICENSED
PROFESSIONAL ENGINEER
ME Engineers, Inc.
F-10231
08/19/2020

ELECTRICAL DETAILS

BID ISSUE

20513
08/19/2020
E601

8/17/2020 9:51:41 AM
C:\Revit Projects\2019\LPD_CENTRAL_E19_Derek.White97PLE.rvt

© 2020 Brinkley Sargent Wigginton Architects, Inc.

GENERAL NOTES:

1. ALL DEVICE BACK-BOX CONDUITS SHALL BE ROUTED TO NEAREST COMM ROOM OR CABLE TRAY, U.N.O. REFER TO DEVICE SYMBOL NOTES ON LEGEND TO CONFIRM IF CONDUIT SHALL STOP AT ACCESSIBLE CEILING SPACE.
2. DESIGN OF ANCHOR BOLTS, CONCRETE POLE BASE AND REBAR TO MEET LOCAL WIND LOADING REQUIREMENTS. TO BE DESIGNED BY A REGISTERED STRUCTURAL ENGINEER PER SPEC SECTION 265613-2.1B.
3. REFER TO LIGHTING PLANS FOR POLE AND BASE REQUIREMENTS.
4. QUANTITY OF MEDIA CONVERTERS, FIBER AND DATA CABLES DETERMINED BY NUMBER NEXT TO SYMBOL.

KEYNOTES:

1. BACK-BOX : PROVIDE 8" X 8" X 4" FLUSH MOUNTED J-BOX. CARLON E88C24 OR EQUAL.
2. CONDUIT : PROVIDE (1) 1" CONDUIT ROUTED TO NEAREST COMMUNICATIONS ROOM OR AS SHOWN ON SITE PLAN.
3. POWER : ELECTRICAL CONDUIT, CABLE AND DEVICES SHOWN FOR REFERENCE ONLY.
4. DIVIDER : PROVIDE METAL BARRIER BETWEEN 120V AND LOW VOLTAGE COMPARTMENTS.
5. CONDUIT : PROVIDE (1) 1" CONDUIT ROUTED TO DEVICE ON POLE.

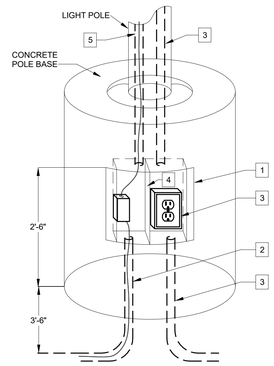

8 POLE BASE ENCLOSURE
NO SCALE

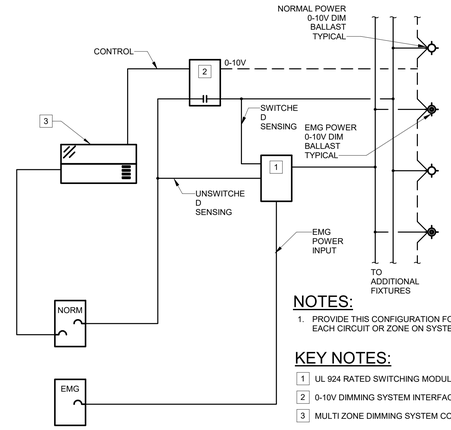

NOTES:

1. PROVIDE THIS CONFIGURATION FOR EACH CIRCUIT OR ZONE ON SYSTEM.

KEY NOTES:

1. UL 924 RATED SWITCHING MODULE.
2. 0-10V DIMMING SYSTEM INTERFACE MODULE.
3. MULTI ZONE DIMMING SYSTEM CONTROLLER.

4 0-10V EMERGENCY DIMMING
NO SCALE

WARNING

Arc Flash and Shock Hazard
Appropriate PPE Required

480/277V	NOMINAL SYSTEM VOLTAGE
42,127A	AVAILABLE FAULT CURRENT
3 FEET	FLASH HAZARD BOUNDARY
3	cal/cm2 FLASH HAZARD AT 18INCHES
1	PPE LEVEL: [PROTECTIVE EQUIPMENT DESCRIPTION]
480 VAC	SHOCK HAZARD WHEN: COVER IS REMOVED
0.03 SEC	CLEARING TIME OF OCPD(S)
42 INCH	LIMITED APPROACH
12 INCH	RESTRICTED APPROACH: [PROTECTIVE EQUIPMENT DESCRIPTION]
1 INCH	PROHIBITED APPROACH: [PROTECTIVE EQUIPMENT DESCRIPTION
1/1/2017	DATE LABEL WAS APPLIED

AS REQUIRED

NOTE:
1. SEE SPECIFICATIONS FOR ADDITIONAL NAMEPLATE INFORMATION.

1 ARC FLASH LABEL
NO SCALE

GENERAL NOTES

1. REFER TO PLAN DRAWINGS FOR QUANTITIES AND LOCATIONS
2. REFER TO SPECIFICATIONS FOR ADDITIONAL INFORMATION AND REQUIREMENTS

KEY NOTES

1. CONCRETE ENCASED ELECTRODE PER NEC 250.52
2. ELECTRICAL ROOM GROUND BAR REFER TO SPECIFICATIONS. CONNECTIONS TO BE BY EXOTHERMIC WELD.
3. GROUND ROD, REFER TO SPECIFICATIONS.
4. EXOTHERMIC WELD OR COMPRESSION CONNECTION.
5. GROUND RISER, REFER TO GROUNDING RISER DIAGRAM
6. PROVIDE EXOTHERMIC WELD AT APPROXIMATE LOCATION ON STEEL COLUMN. LOCATION TO BE BELOW FINAL POURED CONCRETE SLAB
7. [VERIFY FOR LIGHTING PROTECTION] PROVIDE COOPER WIRE (SIZE PER NFPA 780) FOR LIGHTNING PROTECTION DOWNLEAD CONDUCTOR
8. CONNECT DOWNLEAD CONDUCTOR TO GROUND LOOP AND PROVIDE GROUND ROD AT THIS LOCATION.
9. PVC CONDUIT, CONCEAL IN WALLS OR CHASES OR PROVIDE ARCHITECTURAL CHASE. NOT TO BE RUN EXPOSED OR ABOVE CEILINGS.
10. PROVIDE GROUND LOOP AS REQUIRED FOR LIGHTING PROTECTION AND PER PLANS AND SPECIFICATIONS.

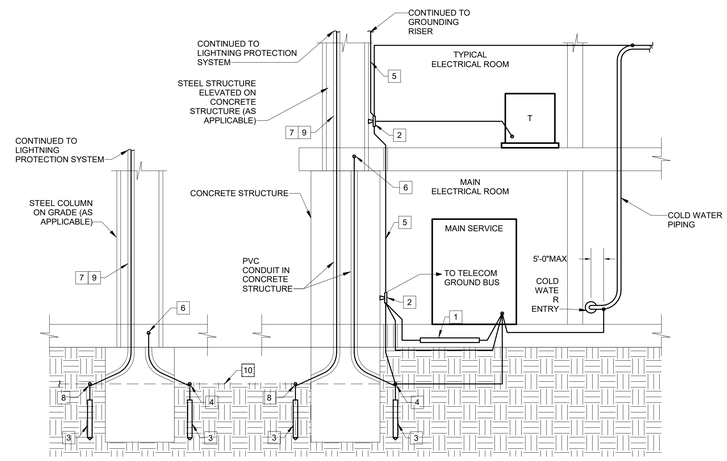

5 GROUNDING DETAILS
NO SCALE

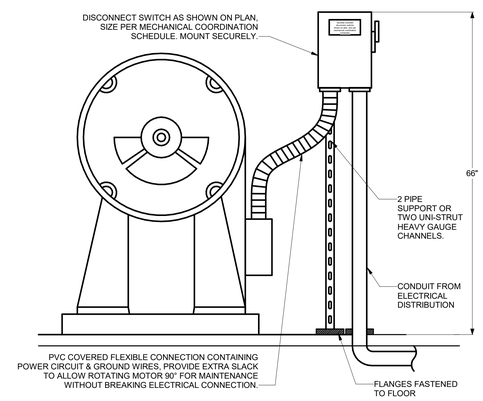

2 CONNECTION TO FLOOR MOUNTED MOTORS
NO SCALE

KEY NOTES:

1. PROVIDE GANGABLE FACEPLATE FOR LIGHTING DEVICES AS NEEDED PER PLAN DRAWINGS
2. COORDINATE MOUNTING OF LIGHT SWITCHES WITH OTHER DEVICES INCLUDING BUT NOT LIMITED TO A/V, THERMOSTATS, OTHER SENSORS, AND COMMUNICATION BOXES. TOP OF ALL DEVICES TO BE AT 48"
3. MOUNTING HEIGHTS SHOWN ON ARCHITECTURAL ELEVATIONS SHALL GOVERN OVER THOSE SHOWN HERE.

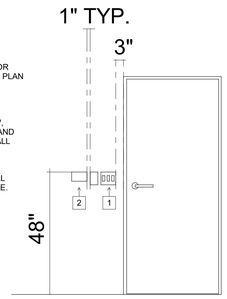

9 LIGHTING SWITCH INSTALLATION
NO SCALE

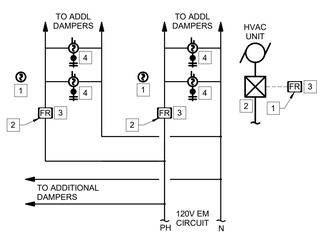

KEYNOTES

1. CORRIDOR DETECTOR OR TOTAL COVERAGE SMOKE DETECTOR SYSTEM IF INSTALLED, REFER TO IBC 717.3.3.2 (4) AND (5).
2. ASSOCIATED HVAC UNIT MOTOR STARTER OR VFD. PROVIDE WITH EXTERNAL CONTACT CLOSURE INPUT TO ALLOW FOR SHUTDOWN OF UNIT FROM FIRE ALARM RELAY
3. NORMALLY CLOSED FIRE ALARM RELAY
4. DAMPER AND ASSOCIATED SMOKE DETECTOR. INSTALL DETECTOR WITHIN 5FT OF DAMPER PER IBC 717.3.3.2.

SEQUENCE OF OPERATION:

UPON ACTIVATION OF A DUCT DETECTOR AT A HVAC UNIT, A DUCT DETECTOR ASSOCIATED WITH A DAMPER, CORRIDOR DETECTOR, OR TOTAL COVERAGE SMOKE DETECTOR:

1.) THE FIRE ALARM RELAY ASSOCIATED WITH THE HVAC UNIT WILL OPEN CAUSING THE UNIT TO SHUT DOWN.

2.) THE FIRE ALARM RELAY AT THE DAMPER POWER CIRCUIT WILL OPEN CAUSING THE DAMPERS TO CLOSE (FAIL-SAFE DAMPERS).

10 FIRE/SMOKE DAMPER
NO SCALE

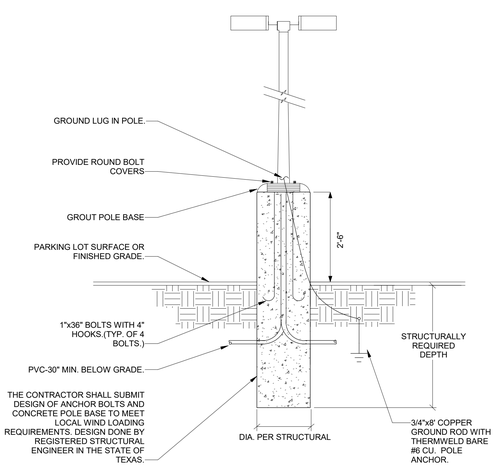

7 PARKING LOT POLE BASE
NO SCALE

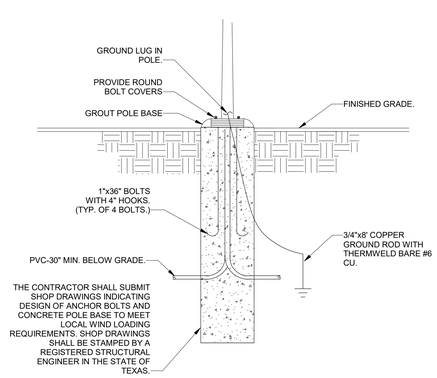

6 PEDESTRIAN POLE
NO SCALE

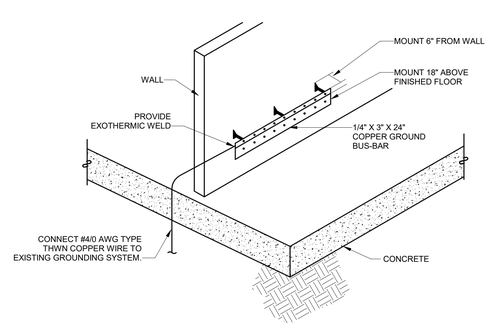

3 MAIN ELECTRICAL ROOM GROUND BUS BAR
NO SCALE

BRINKLEY SARGENT WIGINTON ARCHITECTS

Architect: Brinkley Sargent Wigginton Architects (972) 960-9970
Landscape: Kendall Landscape Architecture (214) 739-3226
Structural: L.A. Fuess Partners, Inc (214) 593-1118
MEP: M-E Engineers (214) 741-1589
Civil: KSA Engineers, Inc (903) 236-7700
Technology: M-E Engineers (303) 421-6656

LONGVIEW POLICE DEPARTMENT

518 W. SOUTH ST. LONGVIEW, TEXAS 75601

History		
#	Date	Description

STATE OF TEXAS
ANDREW SHIVLEY
109010
LICENSED
PROFESSIONAL ENGINEER
ME Engineers, Inc.
F-10231
08/19/2020

ELECTRICAL DETAILS

20513
08/19/2020

E602

BID ISSUE

C:\Revit Projects\2019\PD_CENTRAL_E19_Fuess-MHelt39C.rvt
8/17/2020 9:51:44 AM

© 2020 Brinkley Sargent Wigginton Architects, Inc.

GENERAL NOTES:

1. COMBINATION POKE-THROUGH DEVICE FOR HOUSING POWER, AUDIO/VIDEO AND COMMUNICATIONS DEVICES. REFER TO DIV.26 WIRING DEVICES SPECIFICATION SECTION FOR ADDITIONAL REQUIREMENTS.
2. ALL DATA CONDUITS SHALL BE ROUTED TO NEAREST COMM ROOM OR CABLE TRAY, U.N.O. REFER TO DEVICE SYMBOL NOTES ON TECHNOLOGY LEGEND TO CONFIRM IF CONDUIT SHALL STOP AT ACCESSIBLE CEILING SPACE.

KEYNOTES:

1. FLOOR BOX:
   PROVIDE POKE-THROUGH DEVICE PER DIV.26 WIRING DEVICES SPECIFICATION.
2. MOUNTING PLATE:
   PROVIDE (1) MOUNTING PLATE WITH STYLE-LINE (DECORA) FRAME OPENING FOR DATA OUTLETS. ADDITIONALLY, PROVIDE AV CONNECTION MOUNTING PLATES AND/OR BLANKS AS REQUIRED.
3. POWER:
   RECEPTACLES AND CONDUIT SHOWN FOR REFERENCE.
4. LOW VOLTAGE CONDUIT:
   PROVIDE (1) 1-1/4" CONDUIT FOR DATA CABLING AND (1) 1-1/4" CONDUIT FOR AV CABLING AT APPLICABLE DEVICE LOCATIONS.

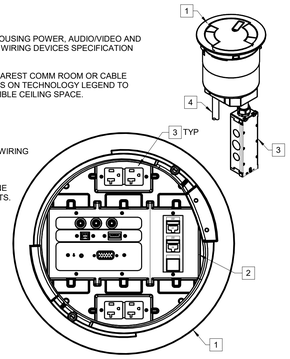

SYMBOLS = OR

7 (PF) AV/POWER/DATA POKE-THROUGH
NO SCALE

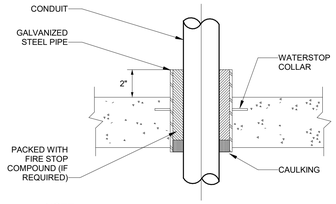

NOTE:
1. ALL CONDUIT PENETRATIONS THROUGH HORIZONTAL OR VERTICAL EXISTING STRUCTURAL MEMBER (WALL, FLOOR, CEILING, ETC.) SHALL BE APPROVED BY THE STRUCTURAL ENGINEER. PROVIDE DRAWINGS FOR APPROVAL.

3 CONDUIT PENETRATION
NO SCALE

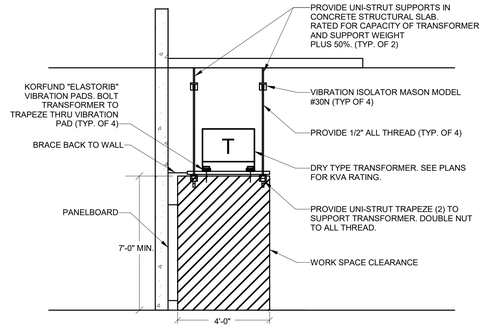

6 (DT) TRAPEZE MOUNTING
NO SCALE

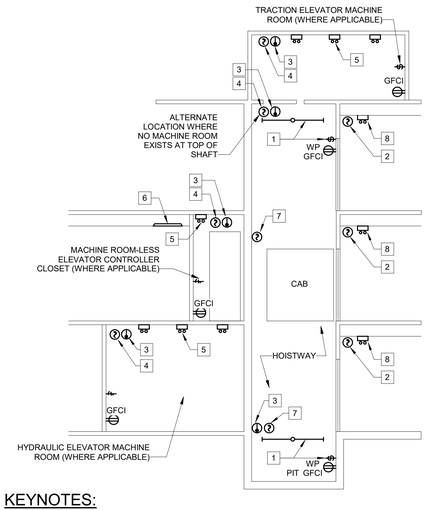

KEYNOTES:

1. WEATHERPROOF GFCI RECEPTACLE ON DEDICATED [STANDBY] CIRCUIT, FLUORESCENT/LED WET LOCATION LENSED STRIPLIGHTS CONTROLLED BY SPST SWITCH. PROVIDE FIXTURES TO ACHIEVE A MINIMUM OF 10FC IN PIT. TYPICAL AT TOP AND BOTTOM OF HOISTWAY.
2. LOBBY SMOKE DETECTOR AT ALL LEVELS, LOBBY, AND EQUIPMENT ROOM SMOKE DETECTORS SHALL INITIATE RECALL, TYPICAL.
3. 135 DEG HEAT DETECTOR ALL HEAT DETECTORS TO AUTOMATICALLY DISCONNECT POWER TO ELEVATOR PRIOR TO THE APPLICATION OF WATER, LOCATE HEAT DETECTOR ADJACENT TO EACH SPRINKLER HEAD.
4. SMOKE DETECTOR FOR FULL COVERAGE PER NFPA, DETECTORS SHALL INITIATE RECALL.
5. PROVIDE FLUORESCENT/LED STRIPLIGHTS WITH WIREGUARD WITHIN MACHINE AND CONTROL ROOMS, PROVIDE FIXTURES TO ACHIEVE A MINIMUM OF 19FC IN ROOM OR CLOSET. COORDINATE LOCATION OF STRIPLIGHTS WITH ELEVATOR EQUIPMENT.
6. PROVIDE ADDITIONAL FIXTURES OUTSIDE OF CLOSET AS NEEDED TO ACHIEVE 19FC AT FRONT OF CONTROLLER. MATCH FIXTURES TYPICAL OF THIS SPACE.
7. PROVIDE SMOKE DETECTOR FOR SMOKE RELIEF DAMPER OR RELIEF HATCH. HATCH TO RELEASE ON SHAFT DETECTOR ALARM.
8. PROVIDE ADDITIONAL FIXTURES AT ELEVATOR LOBBY AS NEEDED TO ACHIEVE 10FC AT THE ELEVATOR SILL.

2 ELEVATOR DETAIL
NO SCALE

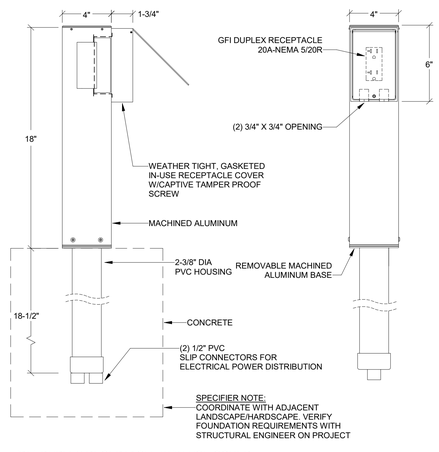

9 (DE) DUPLEX RECEPTACLE W/IN-USE COVER
NO SCALE

GENERAL NOTES:

1. CONTRACTOR SHALL PROVIDE WEATHER PROOF COVER FOR ALL DEVICES WITH "WP" INDICATED AS PART OF SYMBOL ON PLAN DRAWINGS, U.N.O.

KEYNOTES:

1. BACK-BOX:
   FLUSH MOUNTED BOX WITH SINGLE GANG OR DOUBLE GANG COVER PLATE (AS APPLICABLE), SHOWN FOR REFERENCE ONLY.
2. COVER PLATE:
   PROVIDE UL LISTED WEATHERPROOF CAST ALUMINUM SINGLE GANG OR DOUBLE GANG COVER (AS APPLICABLE) THAT WILL ALLOW FOR CABLES TO REMAIN PLUGGED IN WHILE IN THE CLOSED POSITION.

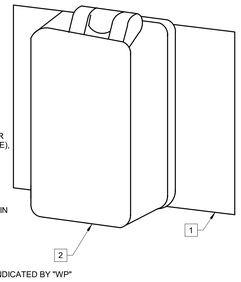

SYMBOLS = INDICATED BY "WP"

5 (PF) IN -USE WEATHER PROOF COVER
NO SCALE

KEYNOTES:

1. RACEWAY :
   PROVIDE 1-1/4" x 4-1/4" GALVANIZED STEEL SURFACE MOUNTED RACEWAY COMPLETE WITH COVER. VERIFY COLOR WITH ARCHITECT.
2. SINGLE-GANG COVER :
   PROVIDE METALLIC SINGLE GANG DUPLEX RECEPTACLE COVER PLATE. VERIFY COLOR WITH ARCHITECT.
3. DUAL-GANG COVER :
   PROVIDE METALLIC DOUBLE GANG DUPLEX RECEPTACLE COVER PLATE. VERIFY COLOR WITH ARCHITECT.
4. DIVIDER: PROVIDE STEEL COMPARTMENT DIVIDER.
5. POWER: ELECTRICAL CABLE AND DEVICES SHOWN FOR REFERENCE ONLY.
6. POWER CONDUIT AND BACK-BOX :
   PROVIDE BACK-BOX WITH CONDUIT MOUNTED FLUSH IN WALL DIRECTLY BEHIND SURFACE MOUNTED RACEWAY FOR ALL POWER HOME RUNS (CONDUIT SIZE PER PLAN DRAWINGS).

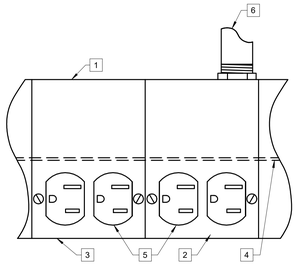

SYMBOLS =

8 SURFACE RACEWAY POWER ONLY
NO SCALE

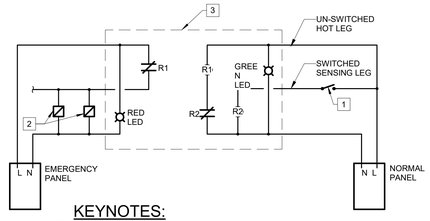

KEYNOTES:

1. LOCAL SWITCHING OCCUPANCY SENSOR, AND/OR RELAY CONTROL.
2. EMERGENCY LIGHTING CONTROLLED BY UL924 DEVICE.
3. UL924 LISTED SWITCHING DEVICE TO ALLOW FOR CONTROL OF EMERGENCY LIGHTS.

4 (LC) UL924 EMERGENCY LIGHTING CONTROL
NO SCALE

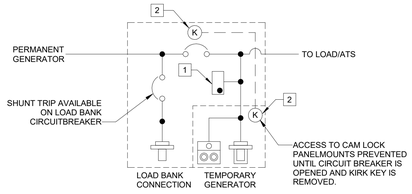

GENERAL NOTES

1. TEMPORARY GENERATOR CONNECTION PROVIDED AS REQUIRED PER NEC 700.3(F).
2. BASIS OF DESIGN IS SALIENT INC. ALTERNATE MANUFACTURERS THAT MEET THE INTENT TO BE SUBMITTED FOR APPROVAL.

KEYNOTES

1. PHASE ROTATION MONITOR.
2. TRAPPED KEY INTERLOCK KIRK KEY MALE CAMLOK ACCESS.

1 GENERATOR DOCKING STATION
NO SCALE

BRINKLEY SARGENT WIGGINTON ARCHITECTS

Architect: Brinkley Sargent Wigginton Architects (972) 960-9970
Landscape: Kendall Landscape Architecture (214) 739-3226
Structural: L.A. Fuess Partners, Inc (214) 593-1118
MEP: M-E Engineers (214) 741-1589
Civil: KSA Engineers, Inc (903) 236-7700
Technology: M-E Engineers (303) 421-6656

LONGVIEW POLICE DEPARTMENT

518 W. SOUTH ST. LONGVIEW, TEXAS 75601

History		
#	Date	Description

STATE OF TEXAS
ANDREW SHIVLEY
109010
LICENSED PROFESSIONAL ENGINEER
ME Engineers, Inc.
F-10231
08/19/2020

ELECTRICAL DETAILS

20513
08/19/2020
E603

BID ISSUE

8/17/2020 9:51:48 AM

C:\Revit Projects\2019\LPD_CENTRAL_E19_Series_Wings3PSE.rvt

© 2020 Brinkley Sargent Wigintion Architects, Inc.

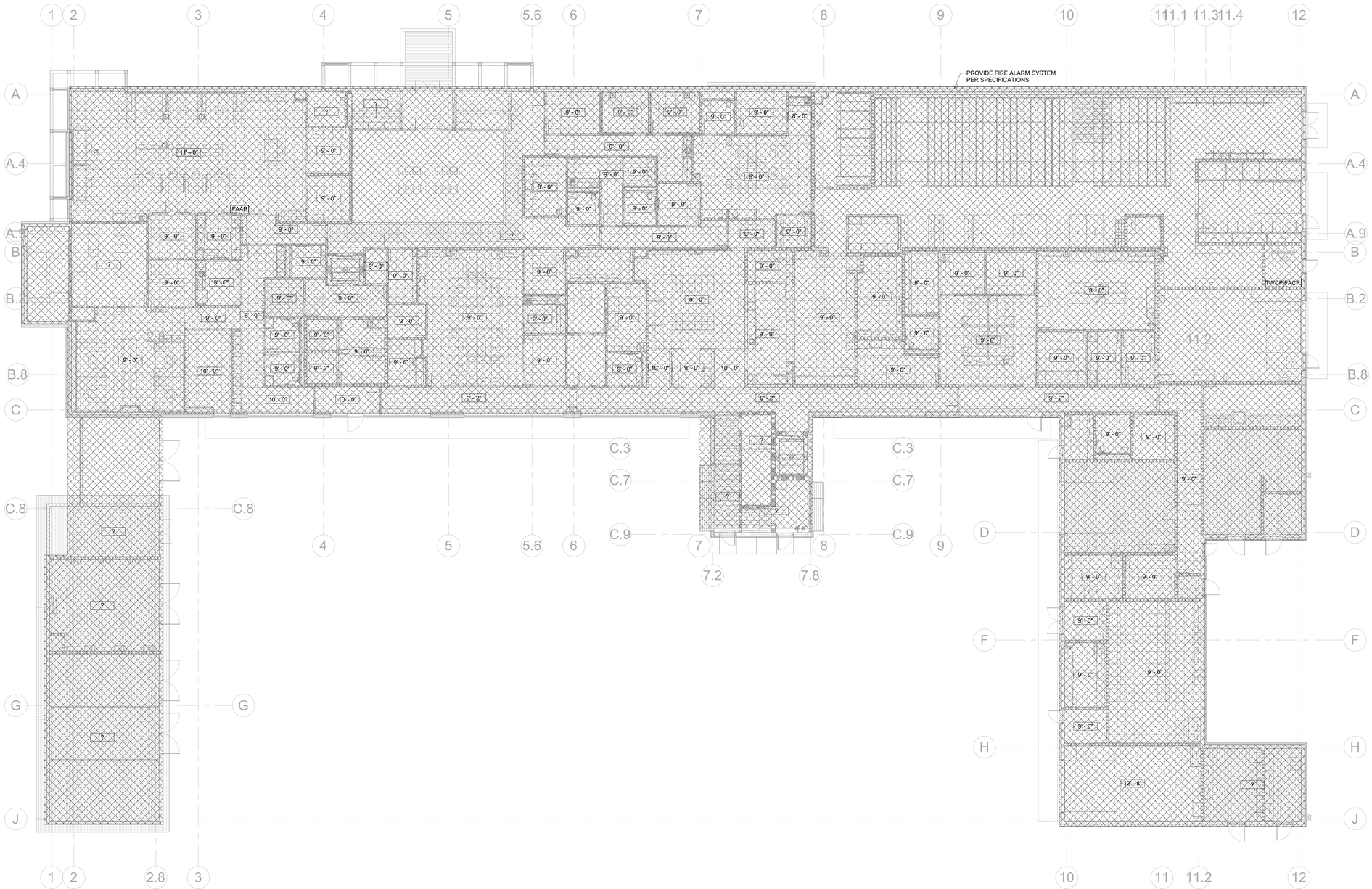

1 LEVEL 1 - REFLECTED CEILING FIRE ALARM PLAN
3/32" = 1'-0"

GENERAL NOTES:

1. CONNECT ALL ELEVATOR LOBBY SMOKE DETECTORS TO ELEVATOR CONTROLLER FOR ELEVATOR RECALL. PROVIDE SHUNT TRIP DEVICE AT DISCONNECT FOR ALL ELEVATOR CONTROLLERS. PROVIDE A HEAT DETECTOR AT THE TOP OF ELEVATOR SHAFT AND ADJACENT TO EACH SPRINKLER HEAD IN ALL ELEVATOR MACHINE ROOMS. ACTIVATION OF HEAT DETECTOR TO INITIATE SHUNT-TRIP.

2. PROVIDE #14 AWG MINIMUM WIRING FOR ALL SIGNAL AND INITIATION DEVICES.

3. ALL EXPOSED CONDUIT SHALL BE ROUTED PERPENDICULAR, PARALLEL, AND TIGHT TO COLUMNS AND BEAMS. ALL EXPOSED CONDUIT ROUTING SHALL BE COORDINATED WITH THE ARCHITECT PRIOR TO INSTALLATION AND INSTALLED IN A NEAT AND CONSISTENT MANNER. NO ADDITIONAL COST TO OWNER WILL BE ALLOWED FOR RELOCATING CONDUIT DUE TO THE LACK OF COORDINATION WITH ARCHITECT. ALL SURFACE MOUNTED CONDUIT WHERE EXPOSED TO PUBLIC AREAS SHALL BE PAINTED. PAINT COLOR TO BE DETERMINED BY THE ARCHITECT. CONTRACTOR SHALL PROVIDE SHOP DRAWINGS INDICATING ALL PROPOSED EXPOSED CONDUIT ROUTING.

4. ALL BACK BOXES SHALL BE FLUSH MOUNTED UNLESS OTHERWISE NOTED. CONTRACTOR SHALL COORDINATE INSTALLATION OF CONDUIT AND BACK BOXES IN POURED CONCRETE, PRE-CAST CONCRETE, MASONRY AND GYP. WALLS.

5. ELECTRICAL SUB-CONTRACTOR SHALL COORDINATE EXACT QUANTITY AND LOCATIONS OF ALL FIRE SPRINKLER SYSTEM TAMPER AND FLOW SWITCHES WITH DIVISION 21 PRIOR TO BID. CONNECT ALL TAMPER AND FLOW SWITCHES TO FIRE ALARM SYSTEM.

6. ELECTRICAL SUB-CONTRACTOR SHALL COORDINATE EXACT LOCATION AND QUANTITY OF ALL DUCT TYPE SMOKE DETECTORS WITH DIVISION 25. ELECTRICAL CONTRACTOR SHALL HARD WIRE TO RELAY STARTER. INCLUDE ALL NECESSARY COSTS FOR GMP.

7. PROVIDE (1) DUCT TYPE SMOKE DETECTORS FOR EACH FAN COIL UNIT, AIR HANDLING UNIT, SUPPLY FAN, AND HEAT PUMP OF 2,000 CFM AND GREATER. PROVIDE (2) DUCT TYPE SMOKE DETECTORS FOR EACH FAN COIL UNIT, AIR HANDLING UNIT, HEAT PUMP AND SUPPLY FAN OF 15,000 CFM AND GREATER. INCLUDE ALL NECESSARY COSTS FOR GMP.

8. PROVIDE SMOKE AND HEAT DETECTORS WITHIN ELEVATOR MACHINE ROOMS AND ELEVATOR HOIST PITS.

9. PROVIDE CONNECTION OF FA SYSTEMS TO ALL MAGNETIC DOOR HOLD-OPEN DEVICES TO AUTOMATICALLY CLOSE DOORS (INCLUDING OVERHEAD STORAGE DOORS) DURING ALARM CONDITIONS.

10. REFER TO ARCHITECTURAL DOOR SCHEDULE FOR MAGNETIC DOOR HOLDER.

11. ALL VISUAL DEVICES WITHIN SIGHT OF EACH OTHER SHALL BE SYNCHRONIZED.

12. CONTRACTOR SHALL REFER TO MECHANICAL DRAWINGS FOR EXACT LOCATION OF ALL FIRE SMOKE DAMPERS. CONTRACTOR SHALL PROVIDE QUANTITY OF CONNECTIONS PER THE MECHANICAL DRAWINGS.

13. PROVIDE INPUT MODULE AT ALL LOCAL FIRE SUPPRESSION SYSTEMS.

14. PROVIDE INTERFACE TO BUILDINGS BDA, AREA OF REFUGEE, AND LIGHTING CONTROL SYSTEMS.

15. CEILING HEIGHTS ARE SHOWN FOR REFERENCE. REFER TO ARCHITECTURAL RCP'S FOR EXACT CEILINGS CONDITIONS.

16. REFER TO SPECIFICATION 283100 FOR DESIGN CRITERIA OF FIRE ALARM SYSTEM.

BRINKLEY SARGENT WIGINTON ARCHITECTS

Architect: Brinkley Sargent Wigintion Architects (972) 960-9970
Landscape: Kendall Landscape Architecture (214) 739-3226
Structural: L.A. Fuess Partners, Inc (214) 593-1118
MEP: M-E Engineers (214) 741-1589
Civil: KSA Engineers, Inc (903) 236-7700
Technology: M-E Engineers (303) 421-6656

LONGVIEW POLICE DEPARTMENT

518 W. SOUTH ST. LONGVIEW, TEXAS 75601

History		
#	Date	Description

STATE OF TEXAS
ANDREW SHIVLEY
109010
LICENSED
PROFESSIONAL ENGINEER
ME Engineers, Inc.
F-10231
08/19/2020

LEVEL 1 - FIRE ALARM PLAN

20513
08/19/2020
E710

BID ISSUE

8/17/2020 9:52:00 AM

C:\Revit Projects\2019\LPD_CENTRAL_E19_Series Revit\PSI.rvt

© 2020 Brinkley Sargent Wigintion Architects, Inc.

GENERAL NOTES:

1. CONNECT ALL ELEVATOR LOBBY SMOKE DETECTORS TO ELEVATOR CONTROLLER FOR ELEVATOR RECALL. PROVIDE SHUNT TRIP DEVICE AT DISCONNECT FOR ALL ELEVATOR CONTROLLERS. PROVIDE A HEAT DETECTOR AT THE TOP OF ELEVATOR SHAFT AND ADJACENT TO EACH SPRINKLER HEAD IN ALL ELEVATOR MACHINE ROOMS. ACTIVATION OF HEAT DETECTOR TO INITIATE SHUNT-TRIP.

2. PROVIDE #14 AWG MINIMUM WIRING FOR ALL SIGNAL AND INITIATION DEVICES.

3. ALL EXPOSED CONDUIT SHALL BE ROUTED PERPENDICULAR, PARALLEL, AND TIGHT TO COLUMNS AND BEAMS. ALL EXPOSED CONDUIT ROUTING SHALL BE COORDINATED WITH THE ARCHITECT PRIOR TO INSTALLATION AND INSTALLED IN A NEAT AND CONSISTENT MANNER. NO ADDITIONAL COST TO OWNER WILL BE ALLOWED FOR RELOCATING CONDUIT DUE TO THE LACK OF COORDINATION WITH ARCHITECT. ALL SURFACE MOUNTED CONDUIT WHERE EXPOSED TO PUBLIC AREAS SHALL BE PAINTED. PAINT COLOR TO BE DETERMINED BY THE ARCHITECT. CONTRACTOR SHALL PROVIDE SHOP DRAWINGS INDICATING ALL PROPOSED EXPOSED CONDUIT ROUTING.

4. ALL BACK BOXES SHALL BE FLUSH MOUNTED UNLESS OTHERWISE NOTED. CONTRACTOR SHALL COORDINATE INSTALLATION OF CONDUIT AND BACK BOXES IN POURED CONCRETE, PRE-CAST CONCRETE, MASONRY AND GYP. WALLS.

5. ELECTRICAL SUB-CONTRACTOR SHALL COORDINATE EXACT QUANTITY AND LOCATIONS OF ALL FIRE SPRINKLER SYSTEM TAMPER AND FLOW SWITCHES WITH DIVISION 21 PRIOR TO BID. CONNECT ALL TAMPER AND FLOW SWITCHES TO FIRE ALARM SYSTEM.

6. ELECTRICAL SUB-CONTRACTOR SHALL COORDINATE EXACT LOCATION AND QUANTITY OF ALL DUCT TYPE SMOKE DETECTORS WITH DIVISION 25. ELECTRICAL CONTRACTOR SHALL HARD WIRE TO RELAY STARTER. INCLUDE ALL NECESSARY COSTS FOR GMP.

7. PROVIDE (1) DUCT TYPE SMOKE DETECTORS FOR EACH FAN COIL UNIT, AIR HANDLING UNIT, SUPPLY FAN, AND HEAT PUMP OF 2,000 CFM AND GREATER. PROVIDE (2) DUCT TYPE SMOKE DETECTORS FOR EACH FAN COIL UNIT, AIR HANDLING UNIT, HEAT PUMP AND SUPPLY FAN OF 15,000 CFM AND GREATER. INCLUDE ALL NECESSARY COSTS FOR GMP.

8. PROVIDE SMOKE AND HEAT DETECTORS WITHIN ELEVATOR MACHINE ROOMS AND ELEVATOR HOIST PITS.

9. PROVIDE CONNECTION OF FA SYSTEMS TO ALL MAGNETIC DOOR HOLD-OPEN DEVICES TO AUTOMATICALLY CLOSE DOORS (INCLUDING OVERHEAD STORAGE DOORS) DURING ALARM CONDITIONS.

10. REFER TO ARCHITECTURAL DOOR SCHEDULE FOR MAGNETIC DOOR HOLDER.

11. ALL VISUAL DEVICES WITHIN SIGHT OF EACH OTHER SHALL BE SYNCHRONIZED.

12. CONTRACTOR SHALL REFER TO MECHANICAL DRAWINGS FOR EXACT LOCATION OF ALL FIRE SMOKE DAMPERS. CONTRACTOR SHALL PROVIDE QUANTITY OF CONNECTIONS PER THE MECHANICAL DRAWINGS.

13. PROVIDE INPUT MODULE AT ALL LOCAL FIRE SUPPRESSION SYSTEMS.

14. PROVIDE INTERFACE TO BUILDINGS BDA, AREA OF REFUGEE, AND LIGHTING CONTROL SYSTEMS.

15. CEILING HEIGHTS ARE SHOWN FOR REFERENCE. REFER TO ARCHITECTURAL RCP'S FOR EXACT CEILINGS CONDITIONS.

16. REFER TO SPECIFICATION 283100 FOR DESIGN CRITERIA OF FIRE ALARM SYSTEM.

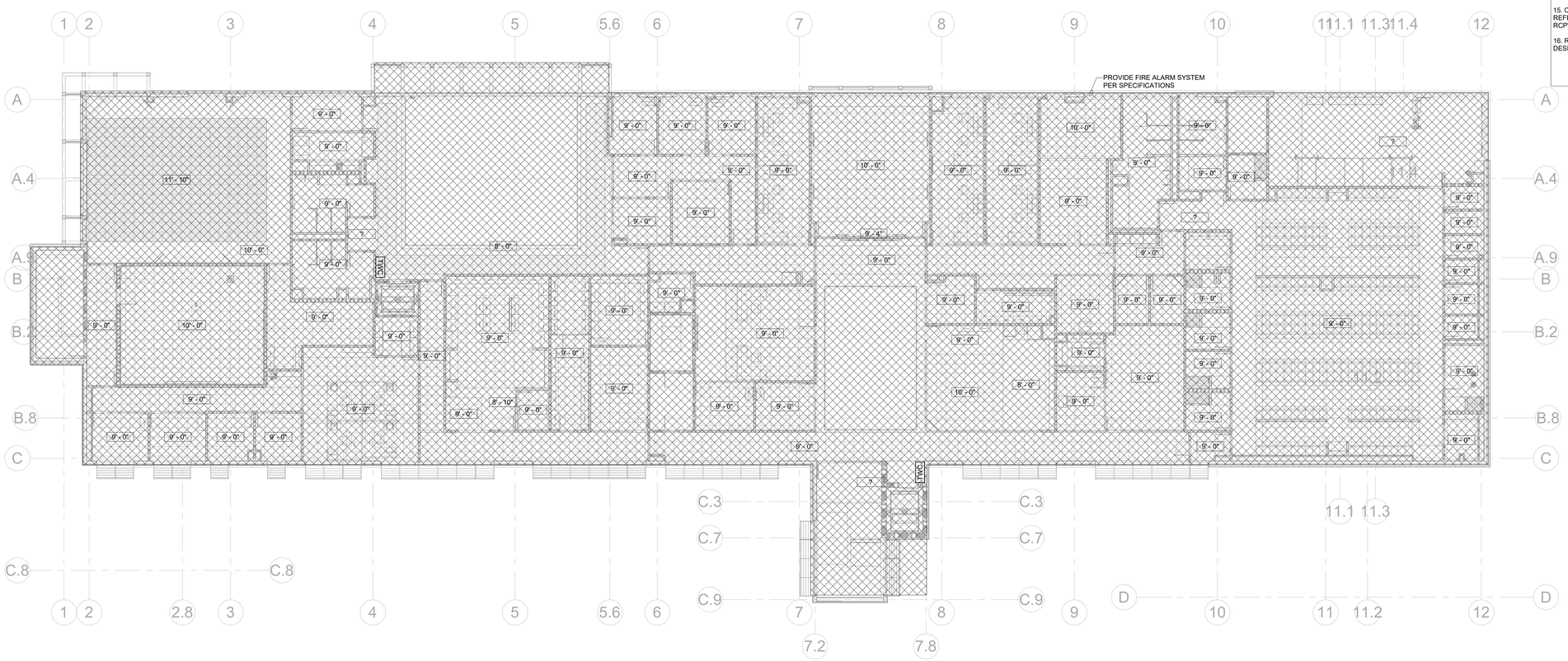

1 LEVEL 2 - REFLECTED CEILING FIRE ALARM PLAN
3/32" = 1'-0"

Architect: Brinkley Sargent Wigintion Architects (972) 960-9970
Landscape: Kendall Landscape Architecture (214) 739-3226
Structural: L.A. Fuess Partners, Inc (214) 593-1118
MEP: M-E Engineers (214) 741-1589
Civil: KSA Engineers, Inc (903) 236-7700
Technology: M-E Engineers (303) 421-6656

BRINKLEY SARGENT WIGINTON ARCHITECTS

LONGVIEW POLICE DEPARTMENT

518 W. SOUTH ST. LONGVIEW, TEXAS 75601

History		
#	Date	Description

STATE OF TEXAS
ANDREW SHIVLEY
109010
LICENSED
PROFESSIONAL ENGINEER
ME Engineers, Inc.
F-10231
08/19/2020

LEVEL 2 - FIRE ALARM PLAN

20513
08/19/2020
E720

BID ISSUE

8/17/2020 9:52:06 AM

C:\Revit Projects\2019\LPD_CENTRAL_E19_Demo_Wrap3PDI.rvt

© 2020 Brinkley Sargent Wigintion Architects, Inc.

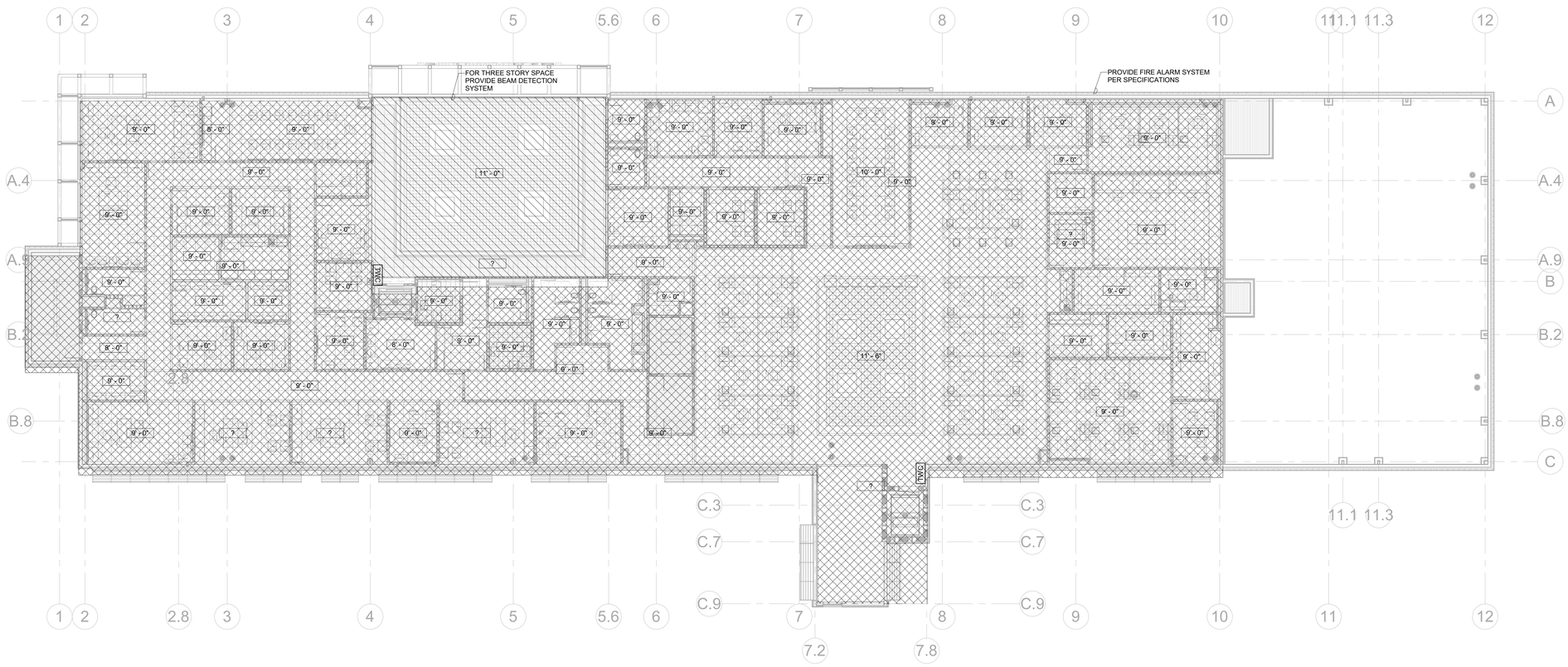

1 LEVEL 3 - REFLECTED CEILING FIRE ALARM PLAN
3/32" = 1'-0"

GENERAL NOTES:

1. CONNECT ALL ELEVATOR LOBBY SMOKE DETECTORS TO ELEVATOR CONTROLLER FOR ELEVATOR RECALL. PROVIDE SHUNT TRIP DEVICE AT DISCONNECT FOR ALL ELEVATOR CONTROLLERS. PROVIDE A HEAT DETECTOR AT THE TOP OF ELEVATOR SHAFT AND ADJACENT TO EACH SPRINKLER HEAD IN ALL ELEVATOR MACHINE ROOMS. ACTIVATION OF HEAT DETECTOR TO INITIATE SHUNT-TRIP.

2. PROVIDE #14 AWG MINIMUM WIRING FOR ALL SIGNAL AND INITIATION DEVICES.

3. ALL EXPOSED CONDUIT SHALL BE ROUTED PERPENDICULAR, PARALLEL, AND TIGHT TO COLUMNS AND BEAMS. ALL EXPOSED CONDUIT ROUTING SHALL BE COORDINATED WITH THE ARCHITECT PRIOR TO INSTALLATION AND INSTALLED IN A NEAT AND CONSISTENT MANNER. NO ADDITIONAL COST TO OWNER WILL BE ALLOWED FOR RELOCATING CONDUIT DUE TO THE LACK OF COORDINATION WITH ARCHITECT. ALL SURFACE MOUNTED CONDUIT WHERE EXPOSED TO PUBLIC AREAS SHALL BE PAINTED. PAINT COLOR TO BE DETERMINED BY THE ARCHITECT. CONTRACTOR SHALL PROVIDE SHOP DRAWINGS INDICATING ALL PROPOSED EXPOSED CONDUIT ROUTING.

4. ALL BACK BOXES SHALL BE FLUSH MOUNTED UNLESS OTHERWISE NOTED. CONTRACTOR SHALL COORDINATE INSTALLATION OF CONDUIT AND BACK BOXES IN POURED CONCRETE, PRE-CAST CONCRETE, MASONRY AND GYP. WALLS.

5. ELECTRICAL SUB-CONTRACTOR SHALL COORDINATE EXACT QUANTITY AND LOCATIONS OF ALL FIRE SPRINKLER SYSTEM TAMPER AND FLOW SWITCHES WITH DIVISION 21 PRIOR TO BID. CONNECT ALL TAMPER AND FLOW SWITCHES TO FIRE ALARM SYSTEM.

6. ELECTRICAL SUB-CONTRACTOR SHALL COORDINATE EXACT LOCATION AND QUANTITY OF ALL DUCT TYPE SMOKE DETECTORS WITH DIVISION 25. ELECTRICAL CONTRACTOR SHALL HARD WIRE TO RELAY STARTER. INCLUDE ALL NECESSARY COSTS FOR GMP.

7. PROVIDE (1) DUCT TYPE SMOKE DETECTORS FOR EACH FAN COIL UNIT, AIR HANDLING UNIT, SUPPLY FAN, AND HEAT PUMP OF 2,000 CFM AND GREATER. PROVIDE (2) DUCT TYPE SMOKE DETECTORS FOR EACH FAN COIL UNIT, AIR HANDLING UNIT, HEAT PUMP AND SUPPLY FAN OF 15,000 CFM AND GREATER. INCLUDE ALL NECESSARY COSTS FOR GMP.

8. PROVIDE SMOKE AND HEAT DETECTORS WITHIN ELEVATOR MACHINE ROOMS AND ELEVATOR HOIST PITS.

9. PROVIDE CONNECTION OF FA SYSTEMS TO ALL MAGNETIC DOOR HOLD-OPEN DEVICES TO AUTOMATICALLY CLOSE DOORS (INCLUDING OVERHEAD STORAGE DOORS) DURING ALARM CONDITIONS.

10. REFER TO ARCHITECTURAL DOOR SCHEDULE FOR MAGNETIC DOOR HOLDER.

11. ALL VISUAL DEVICES WITHIN SIGHT OF EACH OTHER SHALL BE SYNCHRONIZED.

12. CONTRACTOR SHALL REFER TO MECHANICAL DRAWINGS FOR EXACT LOCATION OF ALL FIRE SMOKE DAMPERS. CONTRACTOR SHALL PROVIDE QUANTITY OF CONNECTIONS PER THE MECHANICAL DRAWINGS.

13. PROVIDE INPUT MODULE AT ALL LOCAL FIRE SUPPRESSION SYSTEMS.

14. PROVIDE INTERFACE TO BUILDINGS BDA, AREA OF REFUGEE, AND LIGHTING CONTROL SYSTEMS.

15. CEILING HEIGHTS ARE SHOWN FOR REFERENCE. REFER TO ARCHITECTURAL RCP'S FOR EXACT CEILINGS CONDITIONS.

16. REFER TO SPECIFICATION 283100 FOR DESIGN CRITERIA OF FIRE ALARM SYSTEM.

Architect: Brinkley Sargent Wigintion Architects (972) 960-9970
Landscape: Kendall Landscape Architecture (214) 739-3226
Structural: L.A. Fuess Partners, Inc (214) 593-1118
MEP: M-E Engineers (214) 741-1589
Civil: KSA Engineers, Inc (903) 236-7700
Technology: M-E Engineers (303) 421-6656

BRINKLEY SARGENT WIGINTON ARCHITECTS

LONGVIEW POLICE DEPARTMENT

518 W. SOUTH ST. LONGVIEW, TEXAS 75601

History		
#	Date	Description

STATE OF TEXAS
ANDREW SHIVLEY
109010
LICENSED
PROFESSIONAL ENGINEER
ME Engineers, Inc.
F-10231
08/19/2020

LEVEL 3 - FIRE ALARM PLAN

20513
08/19/2020
E730

BID ISSUE

8/17/2020 9:52:18 AM

C:\Revit Projects\2018\LPD_CENTRAL_EIB_Demo_Wright2016.rvt

© 2020 Brinkley Sargent Wigginton Architects, Inc.

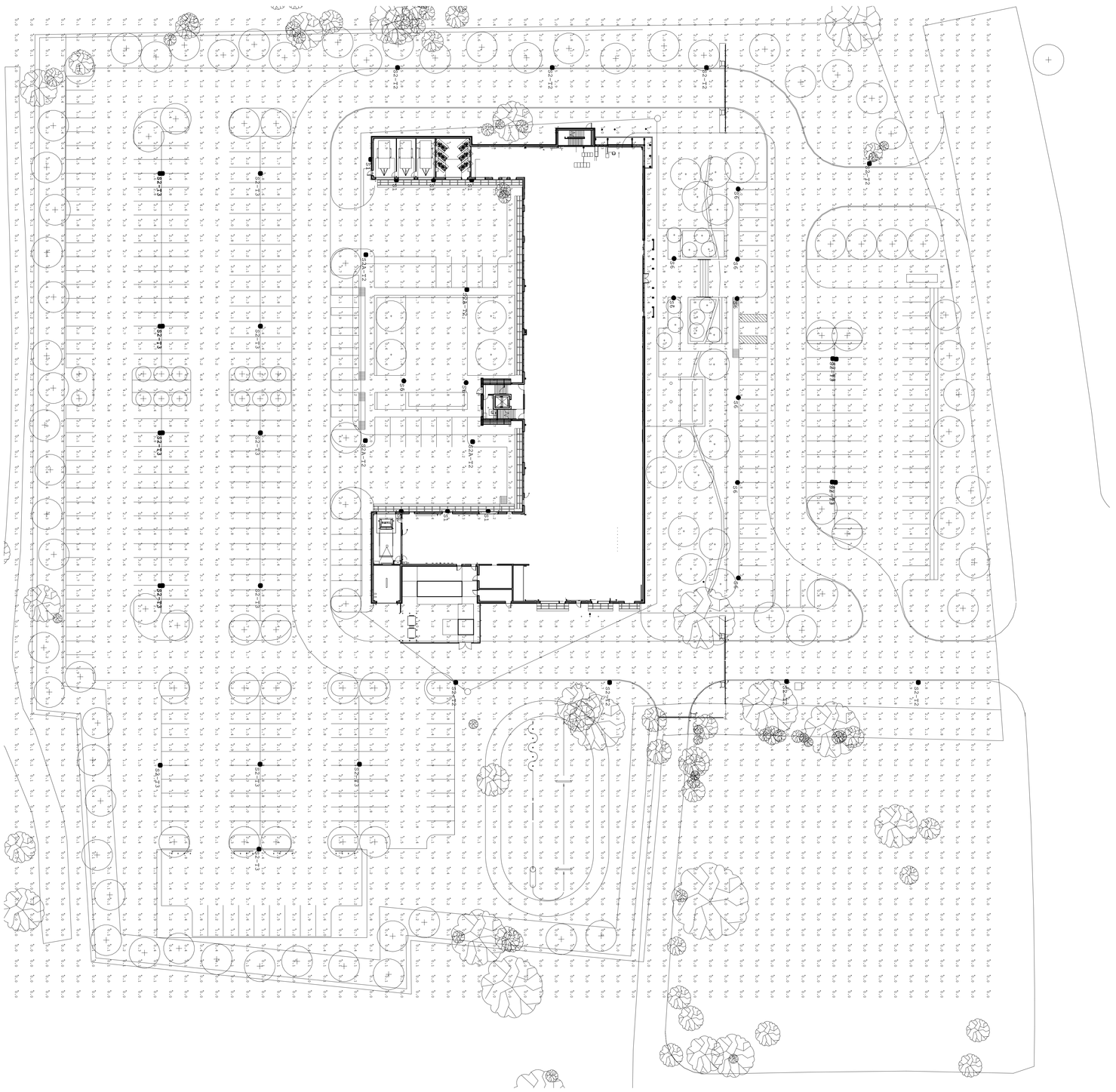

1 SITE PHOTOMETRICS
1" = 30'-0"

LONGVIEW POLICE DEPARTMENT

518 W. SOUTH ST. LONGVIEW, TEXAS 75601

Architect:	Brinkley Sargent Wiginton Architects	(972) 960-9970
Landscape:	Kendall Landscape Architecture	(214) 739-3226
Structural:	L.A. Fuess Partners, Inc	(214) 593-1118
MEP:	M-E Engineers	(214) 741-1589
Civil:	KSA Engineers, Inc	(903) 236-7700
Technology:	M-E Engineers	(303) 421-6656

History

#	Date	Description

ANDREW SHIRLEY
109010
LICENSED
PROFESSIONAL ENGINEER
ME Engineers, Inc.
08/19/2020
TBPE F-10233

SITE PHOTOMETRICS

20513
08/19/2020

E800

BID ISSUE

BRINKLEY SARGENT WIGINTON ARCHITECTS

© 2020 Brinkley Sargent Wiginton Architects, Inc.

PLUMBING LEGEND

(NOT ALL SYMBOLS LISTED BELOW ARE BEING USED IN THIS SET OF PLUMBING DRAWINGS)

SYMBOL	ABBR	DESCRIPTION
MEDICAL		
—MA—	MA	MEDICAL AIR
—O—	O	OXYGEN
—VAC—	VAC	VACUUM
—NO—	NO	NITROUS OXIDE
	G	NAT. GAS OUTLET
	O	OXYGEN OUTLET
	V	VACUUM OUTLET
	MA	MEDICAL AIR OUTLET
	MA	MED AIR OUTLET
SPRINKLER HEADS		
		EXISTING SPRINKLER HEAD TO REMAIN
		EXISTING SPRINKLER HEAD TO RELOCATED
		EXISTING SPRINKLER HEAD TO NEW LOCATION
A		NEW SPRINKLER HEAD TO MATCH EXISTING
PIPING:		
—(E)—	(E)	EXISTING PIPING
—(E)—		EXISTING PIPING TO BE REMOVED
—CW—	CW	DOMESTIC COLD WATER
—HW—	HW	DOMESTIC HOT WATER
—T—	T	TEMPERED WATER
—HWC—	HWC	DOMESTIC HOT WATER CIRCULATING
—SAN—	SAN	SANITARY WASTE ABOVE FLOOR
—SAN—	SAN	SANITARY WASTE BELOW FLOOR
—GW—	GW	GREASE WASTE BELOW FLOOR
- - - V - - -	V	SANITARY VENT
—ST—	ST	STORM PIPING ABOVE FLOOR
—ST—	ST	STORM PIPING BELOW FLOOR
—OD—	OD	STORM OVERFLOW ABOVE FLOOR
—OD—	OD	STORM OVERFLOW BELOW FLOOR
—G—	G	NATURAL GAS
—F—	F	FIRE
—DR—	DR	EQUIP. DRAIN
—A—	A	COMPRESSED AIR
—2"SAN—		PIPE SIZE/ PIPE TYPE
FITTINGS:		
EJ	EJ	EXPANSION JOINT
	U	UNION
		THERMOMETER W/THERMOWELL
	AV	AIR VENT
	FC	FLEXIBLE PIPE CONNECTOR
FS	FS	FLOW SWITCH
PS	PS	PRESSURE SWITCH
	PG	PRESSURE GAUGE W/GAUGE COCK

SYMBOL	ABBR	DESCRIPTION
FITTINGS:		
		ELBOW UP
		ELBOW DOWN
		TEE UP
		TEE DOWN
		PIPE CAP OR PLUG
	GC	GAS COCK
	CO	CLEANOUT PLUG
	HB WH	HOSE BIBB WALL HYDRANT
	VB	VACUUM BREAKER
	RD	ROOF DRAIN
	OD	OVERFLOW ROOF DRAIN
	DSN	DOWNSPOUT NOZZLE
	SA	SHOCK ARRESTOR W/BALL VALVE
	FD	FLOOR DRAIN
	AD	AREA DRAIN
	FCO GCO	FLOOR CLEANOUT GRADE CLEANOUT
	WCO CO	WALL CLEANOUT CLEANOUT PLUG
	VTR	VENT THRU ROOF
VALVES:		
	GV	GATE VALVE
	OS&Y	OUTSIDE STEM AND YOKE
	DV	DRAIN VALVE W/ HOSE END CONN.
		BALL VALVE W/ HOSE CONNECTION
	CV	CHECK VALVE WITH FLOW DIRECTION
	PRV	PRESSURE REDUCING VALVE
S	SV	SOLENOID VALVE
FC	FCV	AUTO FLOW CONTROL VALVE W/ TEST PORT
	CS	CIRCUIT SETTER
	GLV	GLOBE VALVE (STRAIGHT PATTERN)
	GLV	GLOBE VALVE (ANGLE PATTERN)
	BFV	BUTTERFLY VALVE
	BV	BALL VALVE
	TCV	AUTO TEMP CONTROL VALVE, 2-WAY
	TCV	AUTO TEMP CONTROL VALVE, 3-WAY
	PV	PLUG VALVE
	TPR	TEMP/PRESSURE RELIEF VALVE
		VALVE IN RISER
	STR	STRAINER W/ BLOW-OFF & CAPPED HOSE-END CONNECTION
		STEAM TRAP

SYMBOL	ABBR	DESCRIPTION
SYMBOLS: 1 / P1		SECTION NO. / SECTION VIEW SHEET NO.
F / M1		DETAIL DESIGNATION
F 1 / F 1		EQUIPMENT DESIGNATION
1		SHEET KEY NOTES
	POC	POINT OF CONN. (CONN. NEW TO EXISTING)
	POD	POINT OF DISCONNECTION
		ARROW INDICATES DIRECTION OF FLOW
UP		RISE IN DIRECTION OF FLOW
DN		DROP IN DIRECTION OF FLOW
	TB	THRUST BLOCK
	DN	DOWN
	AFF	ABOVE FIN. FLOOR
	AFG	ABOVE FIN. GRADE
	TOP	TOP OF PIPE (AFF)
	BOP	BOT. OF PIPE (AFF)
	I.E.	INVERT ELEVATION
	VBF	VENT BELOW FLOOR
	NTS	NOT TO SCALE
(E)	(E)	EXISTING
(N)	(N)	NEW
(R)	(R)	REMOVE OR RELOCATE

EQUIPMENT DESIGNATIONS

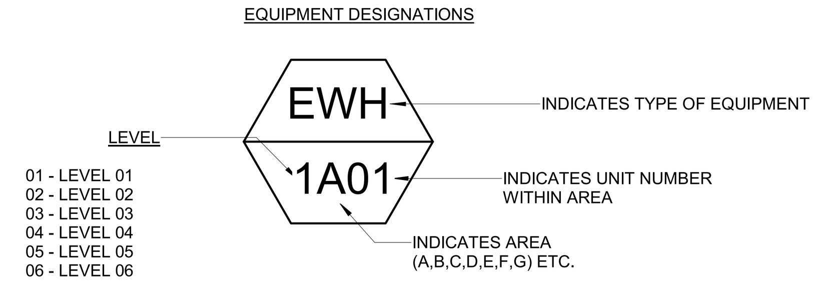

GENERAL DRAWING NOTES

1. WHERE DIFFERENCES APPEAR BETWEEN PLUMBING DRAWINGS AND ARCHITECTURAL DRAWINGS IN THE QUANTITIES AND LOCATIONS OF PLUMBING FIXTURES, THE ARCHITECTURAL DRAWINGS SHALL BE USED FOR PRICING. WHERE NECESSARY, THE CONTRACTOR SHALL USE UNIT PRICING FOR WASTE AND VENT PIPING TO EACH PLUMBING FIXTURE.

GENERAL PLUMBING CONTRACT REQUIREMENTS

1. PREPARE SHOP DRAWINGS OF ALL NEW WORK (INCLUDING SLEEVE LOCATIONS) TO VERIFY LOCATIONS AND COORDINATION OF WORK BETWEEN TRADES PRIOR TO INSTALLATION.

2. ALL DRAIN GRATES, CLEANOUT COVERS, AND OTHER FINISHED OR EXPOSED COMPONENTS SHALL BE PROTECTED FROM DAMAGE. DAMAGED COMPONENTS SHALL BE REPLACED BY CONTRACTOR AT NO ADDITIONAL COST TO THE CONTRACT.

3. COORDINATE ROUTING OF ALL PLUMBING PIPING BELOW SLAB WITH STRUCTURAL GRADE BEAMS, TIE BEAMS, ETC. ALLOW FOR REROUTING OF PIPING AS REQUIRED.

4. PIPING ROUTING ON DRAWINGS IS GENERALLY DIAGRAMMATIC WITH EFFORTS DURING DESIGN TO AVOID STRUCTURAL CONFLICTS. CONTRACTOR SHALL COORDINATE ROUTING OF ALL PIPING THROUGH BUILDING WITH STRUCTURAL CONDITIONS. CONTRACTOR COORDINATION DRAWINGS SHALL REFLECT ALL PIPE ROUTING AND PIPING THAT MAY HAVE TO BE SHIFTED OR MOVED TO AVOID CONFLICTS. SHIFTED OR MOVED PIPING SHALL REFLECT NO ADDITIONAL COST TO THE PROJECT.

5. ALL REQUIRED OPENINGS IN CONCRETE BEAMS AND STRUCTURAL WALLS ARE TO BE ACCOMPLISHED USING SLEEVES PROPERLY SIZED FOR THE PIPE THEY SERVE. CORE DRILLING IN BEAMS IS NOT ALLOWED. CORE DRILLING IN PANS IS ALLOWED UPON PRIOR APPROVAL OF ARCHITECT AND STRUCTURAL ENGINEER.

6. ALL HORIZONTAL SANITARY PIPING 3" AND SMALLER WHETHER BELOW OR ABOVE GRADE SHALL SLOPE AT 1/4"/FT. ALL PIPING 4" AND LARGER SHALL SLOPE AT 1/8"/FT UNLESS OTHERWISE NOTED. ALL STORM AND OVERFLOW PIPING SHALL SLOPE AT 1/8"/FT UNLESS OTHERWISE NOTED. ALL GREASE WASTE PIPING SHALL SLOPE AT 1/4"/FT.

7. REFERENCE CIVIL DIVISION DRAWINGS FOR REQUIRED POINT OF CONNECTION AND INVERT REQUIREMENTS. IN GENERAL, THE POINT OF CONNECTION IS AT A POINT 5 FEET OUTSIDE OF BUILDING FOOTPRINT. CONFORM WORK TO MEET INVERT ELEVATIONS ON CIVIL PLANS.

8. CAP ALL SANITARY AND STORM TEES FOR FUTURE BRANCH PIPING AND STAKE LOCATION OF PIPING FOR CONNECTION TO FUTURE BRANCH LINES.

9. WHERE SHOWN, MINIMIZE THE NUMBER OF JOINTS ON ANY PRESSURIZED PIPING BELOW CONCRETE SLABS. ALL BELOW GRADE PIPING TO BE PRESSURE TESTED AND WITNESSED BY ARCHITECT PRIOR TO BACKFILLING.

10. ALL CLEANOUTS FOR HORIZONTAL STORM DRAINAGE SYSTEM SHALL BE PIPE SIZE OR MAXIMUM 6" FOR LARGER PIPE. RE: LANDSCAPE FOR DETAIL OF CLEANOUTS AND MANHOLE COVERS IN WARNING TRACK AREA.

11. IN ADDITION TO THE CLEANOUT LOCATIONS SHOWN ON DRAWINGS, CLEANOUTS SHALL BE PROVIDED IN ACCORDANCE WITH THE LOCAL GOVERNING CODE. ADDITIONAL CLEANOUTS SHALL BE PROVIDED AS FOLLOWS:
A. EACH RUN OF PIPING WHICH IS MORE THAN 75 FEET IN LENGTH OR FRACTION THEREOF.
B. HORIZONTAL LINES 5 FEET OR MORE.
C. HORIZONTAL LINES FOR EACH AGGREGATE CHANGE OF DIRECTION EXCEEDING 135 DEGREES.
D. AT THE BASE OF ALL SANITARY AND STORM RISERS. ALL VERTICAL CLEANOUTS SHALL BE SIZED TO ACCOMMODATE THE LARGEST PIPE ON THAT BRANCH LINE, BUT NEVER LARGER THAN 4".
E. ALL GREASE WASTE PIPING SHALL HAVE CLEANOUTS EVERY 50 FEET OR FRACTION THEREOF AND AS NOTED ABOVE.

12. NO GAS LINES SHALL BE LOCATED BELOW BUILDING SLAB. ALL GAS PIPING IN AIR PLENUMS SHALL BE WELDED.

13. PROVIDE ISOLATION VALVES ON ALL PIPING SERVING HOSE BIBBS.

14. STANDARD ROOF DRAINAGE IS SIZED AT 6"/HR. OVERFLOW DRAINAGE IS ACCOMPLISHED THROUGH ARCHITECTURAL ROOF SCUPPERS. WHERE OVERFLOW DRAINS ARE USED, THEY WILL BE SIZED USING 6"/HR RATE.

15. ALL RESTROOMS WITH WATER CLOSETS AND URINALS SHALL HAVE COLD WATER HEADERS INSTALLED BEHIND FLUSH VALVE FIXTURES WITH SIZES AS SHOWN ON PLANS. WATER HAMMER ARRESTORS (SHOCK ABSORBERS) SHALL BE INSTALLED BETWEEN THE LAST 2 FLUSH VALVE FIXTURES. WHEN THE COLD WATER HEADER IS 20 FEET OR LONGER, A SECOND ARRESTOR SHALL BE INSTALLED HALFWAY DOWN THE HEADER. THE SIZES OF THE ARRESTORS SHALL BE BASED ON PDI SIZING.

16. ALL FLOOR DRAINS IN BUILDING EXCEPT DRAINS IN SHOWERS AND SHOWER AREAS SHALL BE INSTALLED WITH A PRIMER TAP AND A 1/2" COLD WATER LINE ROUTED FROM FLOOR DRAIN PRIMER TAP AND STUBBED UP AT PLUMBING CHASES + 12"AFF FOR CONNECTION TO TRAP PRIMER UNIT. COLD WATER PIPING IN OR BELOW FLOOR SLAB SHALL BE WRAPPED WITH POLYWRAP OR APPROVED EQUAL MATERIAL TO PROVIDE PROTECTION TO PIPING. ALL PIPING SHALL BE ONE PIECE FROM PRIMER TAP TO STUBUP.

17. ALL DOMESTIC WATER PIPING SERVING TOILET OR RESTROOM GROUPS SHALL BE INSTALLED WITH ISOLATION VALVES IN ORDER TO ISOLATE THESE AREAS WITHOUT CLOSING DOWN ANY OTHER PORTION OF THE BUILDING WATER SUPPLY SYSTEMS. ALL ISOLATION VALVES SHALL BE ACCESSIBLE WITH ACCESS PANELS. MINIMUM ACCESS PANEL SIZE SHALL BE 12"x12". ACCESS PANELS SHALL BE OF THE SAME RATING AS THE STRUCTURAL ELEMENT IN WHICH THEY ARE INSTALLED.

18. ALL GAS PRESSURE REDUCING VALVES SHALL BE PROVIDED WITH VENT PIPING TO ATMOSPHERE.

19. THROUGHOUT THE DRAWINGS, NUMBERS ARE SHOWN IN BRACKETS TO INDICATE QUANTITIES OF UNITS CARRIED WITHIN THE DIFFERENT PIPING SYSTEMS. THEY REPRESENT THE FOLLOWING:
CW (X)/[X] = (GPM)/[GPM]
GAS (X)/[X] = (MBH)/[MBH]
SAN (X)/[X] = (DFU)/[DFU]
VENT (X)/[X] = (DFU)/[DFU]
ST/OD (X)/[X] = (FT^2)/(FT^2)
FOR CALCULATION PURPOSES OF ALL PIPE SIZES, VALUES SHOWN ARE WITHIN 10 PERCENT OF ACTUAL LOAD VALUES.

20. ALL EQUIPMENT AND PIPING SHALL BE BRACED FOR SEISMIC REQUIREMENTS APPLICABLE FOR SEISMIC ZONE REQUIREMENTS FOR THIS PROJECT.

21. REFER TO GENERAL MECHANICAL CONTRACT REQUIREMENT NOTES ON MECHANICAL DRAWINGS FOR GENERAL PIPING HEAT TRACE INSTALLATION REQUIREMENTS.

22. PROVIDE DIELECTRIC FITTINGS AT ALL CONNECTIONS BETWEEN DISSIMILAR METALS AND AS SHOWN ON DRAWINGS.

23. ALL TEMPERING VALVES TO BE SET FOR 110° F WATER TEMPERATURE MAXIMUM UNLESS OTHERWISE NOTED.

24. PROVIDE HEAT TRACE IN LOCATIONS SHOWN, AS REQUIRED BY SPECIFICATIONS, AND TO THE FOLLOWING SYSTEMS WHEN EXPOSED TO FREEZING CONDITIONS:
A. DOMESTIC COLD WATER
B. DOMESTIC HOT WATER
C. DOMESTIC HOT WATER RECIRC
D. SANITARY
E. STORM
ALL HEAT TRACED PIPE SHALL BE INSULATED PER SPECIFICATIONS. COORDINATE ALL HEAT TRACING AND REQUIRED CIRCUITS WITH ELECTRICAL DRAWINGS AND ELECTRICAL CONTRACTOR.

Architect: Brinkley Sargent Wiginton Architects (972) 960-9970
Landscape: Kendall Landscape Architecture (214) 739-3226
Structural: L.A. Fuess Partners, Inc (214) 593-1118
MEP: M-E Engineers (214) 741-1589
Civil: KSA Engineers, Inc (903) 236-7700
Technology: M-E Engineers (303) 421-6656

BRINKLEY SARGENT WIGINTON ARCHITECTS

LONGVIEW POLICE DEPARTMENT

518 W. SOUTH ST. LONGVIEW, TEXAS 75601

History

#	Date	Description

STATE OF TEXAS
LAUREN F. BERRY
117369
LICENSED PROFESSIONAL ENGINEER
ME Engineers, Inc.
F-10231
08/19/2020

PLUMBING LEGEND AND NOTES

20513
08/19/2020
P001

BID ISSUE

8/17/2020 9:19:47 AM
C:\Revit Projects\2019\LPD_CENTRAL_P19_ron.ward.rvt

© 2020 Brinkley Sargent Wigginton Architects, Inc.

PLUMBING FIXTURE SCHEDULE

CODE	FIXTURE	DESCRIPTION	LOCATION	MIN CW CONN.	MIN HW CONN.	MIN SAN...	MIN VENT CONN.	MANUFACTURER & MODEL NO.	FAUCET/FLUSH VALVE	REMARKS
WC-1	WATER CLOSET ADA	WALL HUNG-FV, 1.28 GPF	SEE PLANS	1"	-	4"	2"	SLOAN ST-2459	SLOAN ROYAL 111 ESS	EB, WM, HARD WIRED FV, S, VC, CHURCH SEAT # 295CF
WC-2	WATER CLOSET ADA	WALL HUNG-FV, 1.28 GPF	SEE PLANS	1"	-	4"	2"	SLOAN ST-2459	SLOAN ROYAL 111 ESS	ADA, EB, WM, HARD WIRED FV, S, VC, CHURCH SEAT # 295CF
WC-3	WATER CLOSET ADA	WALL HUNG-FV, 1.28 GPF	SEE PLANS	1"	-	4"	2"	SLOAN ST-2459	SLOAN ROYAL111-1.28	ADA, EB, WM, FV, S, VC, CHURCH SEAT # 295CF
WC-4	WATER CLOSET ADA	WALL HUNG-FV, 1.28 GPF	SEE PLANS	1"	-	4"	2"	SLOAN ST-2459	SLOAN ROYAL111-1.28	ADA, EB, WM, FV, S, SS
WC-5	WATER CLOSET ADA	WALL HUNG-FV, 1.28 GPF (SECURITY)	SEE PLANS	1"	-	4"	2"	ALCORN 3332	SUPPLIED WITH UNIT	EB, WM, HARD WIRED FV, S, VC, CHURCH SEAT # 295CF
UR-1	URINAL WALL HUNG	WALL HUNG-FV, 0.125 GPF	SEE PLANS	3/4"	-	2"	2"	SLOAN SU-1009	SLOAN ROYAL 186 ESS	HARD WIRED FV, VC, WC, WH, WO
UR-2	URINAL ADA WALL HUNG	WALL HUNG-FV, 0.125 GPF	SEE PLANS	3/4"	-	2"	2"	SLOAN SU-1009	SLOAN ROYAL 186 ESS	ADA, HARD WIRED FV, VC, WC, WH, WO
UR-3	URINAL WALL HUNG	WALL HUNG-FV, 0.125 GPF	SEE PLANS	3/4"	-	2"	2"	SLOAN SU-1009	SLOAN ROYAL 186-0.125	FV, VC, WC, WH, WO
UR-4	URINAL ADA WALL HUNG	WALL HUNG-FV, 0.125 GPF	SEE PLANS	3/4"	-	2"	2"	SLOAN SU-1009	SLOAN ROYAL 186-0.125	ADA, FV, VC, WC, WH, WO
L-1	LAVATORY COUNTER TOP	COUNTER TOP-FV, 0.5 GPM	SEE PLANS	1/2"	1/2"	2"	2"	AMERICAN STANDARD 0475.047 'AQUALYN'	SLOAN SF-2100	ADA, HARD WIRED FAUCET, MV, WO, WITH ASSE 1070 MIXING VALVE MV-1 AT EACH FAUCET, SEE NOTE # 2,
L-2	LAVATORY WALL HUNG ADA	WALL HUNG-FV, 0.5 GPM	SEE PLANS	1/2"	1/2"	2"	2"	AMERICAN STANDARD 0355.041 'LUCERNE'	SLOAN SF-2100	ADA, HARD WIRED FAUCET, MV, WO, WITH ASSE 1070 MIXING VALVE MV-1 AT EACH FAUCET, SEE NOTE # 2,
L-3	LAVATORY COUNTER TOP	COUNTER TOP-FV, 0.5 GPM	SEE PLANS	1/2"	1/2"	2"	2"	AMERICAN STANDARD 0475.028 'AQUALYN'	AMERICAN STANDARD 5502.145...	ADA, MANUAL FAUCET, MV, WO, WITH ASSE 1070 MIXING VALVE MV-1 AT EACH FAUCET, SEE NOTE # 2,
L-4	LAVATORY WALL HUNG ADA	WALL HUNG-FV, 0.5 GPM (SECURITY)	SEE PLANS	1/2"	1/2"	2"	2"	ACORN 1652RB	PROVIDED WITH UNIT	ADA, HARD WIRED FAUCET, MV, WO, WITH ASSE 1070 MIXING VALVE MV-1 AT EACH FAUCET, SEE NOTE # 2,
S-1	GENERAL SINGLE COMPARTMENT SINK	SINGLE COMPARTMENT, STAINLESS STEEL	SEE PLANS	1/2"	1/2"	2"	2"	ELKAY LRAD191955	CHICAGO FAUCETS # 201-E35JKABCP	CT, ADA, MV, SS, 1.5 GPM AERATOR - 5.5" DEPTH
S-2	KITCHEN SINKS	DOUBLE COMPARTMENT, STAINLESS STEEL	SEE PLANS	1/2"	1/2"	2"	2"	ELKAY LARD292255	CHICAGO FAUCETS # 201-E35JKABCP	CT, ADA, MV, SS, 1.5 GPM AERATOR - 5.5" DEPTH
S-3		WALL HUNG, STAINLESS STEEL	SEE PLANS	1/2"	1/2"	2"	2"	ELKAY CHS1716C		WALL HUNG, SS, PROVIDE WITH FAUCET WITH WRIST BLADES
GD-1	DISPOSAL	DISPOSAL	SEE PLANS			2"	2"	IN-SINK-ERATOR BADGER 5		5 HP, 120V, 1 PHASE, 60HZ
LT-1	LAUNDRY TUB	SINGLE COMPARTMENT, STAINLESS STEEL	SEE PLANS	1/2"	1/2"	3"	2"	ELKAY SSP - B1C18X21X - 24 1/2	CHICAGO FAUCETS # 445-8975SRCXKCP	SS, FM WITH PT-1
SH-1	SHOWER		SEE PLANS	1/2"	1/2"	2"	2"	BASIN BY ARCHITECT	AMERICAN STANDARD 1662.211 'FLOW WISE'	ADA, 1.5 GPM HAND HELD SHOWER SYSTEMS KIT
SH-2	SHOWER		SEE PLANS	1/2"	1/2"	2"	2"	BASIN BY ARCHITECT	AMERICAN STANDARD 1662.211 'FLOW WISE'	ADA, 1.5 GPM HAND HELD SHOWER SYSTEMS KIT
EWC-1	ELECTRIC WATER COOLER	DUAL UNIT WITH BOTTLE FILLER	SEE PLANS	1/2"	-	2"	2"	ELKAY LZSTL8WSLK		EWC WITH BOTTLE FILLER WITH GREEN TRACKER PROVIDE WITH CANE SKIRT
MSB-1	36" X 36" MOP SINK	FLOOR MOUNTED MOP SINK	SEE PLANS	3/4"	3/4"	3"	2"	FIAT # TSB3012 WITH MSG	CHICAGO FAUCETS # 897-CCP	WITH PAIL HOOK, VACUUM BREAKER, 3/4" HOSE THREAD OUTLET, WALL BRACE
ESH-1	EMERGENCY EYEWASH/SHOWER		SEE PLANS	1-1/4"	1-1/4"			HAWS MODEL 8300CRP-8309CRP		PROVIDE WITH HAWS TWBS.SHE MIXING VALVE MV-3
EEW-1	EMERGENCY EYEWASH		SEE PLANS	1-1/4"	1-1/4"			HAWS MODEL 7610S		PROVIDE WITH HAWS 9201EFE MIXING VALVE MV-4
MV-1	MIXING VALVE	SINGLE FIXTURE MIXING VALVE	ALL LAVATORIES & HAND WASHING SINKS	1/2"	1/2"			LEONARD # 270-LF		ASSE 1070 CERTIFIED ONLY
MV-2	MIXING VALVE	WHOLE BUILDING MIXING VALVE	MECHANICAL ROOM	SEE PLANS	SEE PLANS			LEONARD # TM-186-1520B-LF-RF-STSTL-REC		ASSE 1017 CERTIFIED
MV-3	MIXING VALVE	EMERGENCY SHOWER MIXING VALVE	SEE PLANS	SEE PLANS	SEE PLANS			HAWS TWBS.SHE		
MV-4	MIXING VALVE	EMERGENCY SHOWER MIXING VALVE	SEE PLANS	SEE PLANS	SEE PLANS			HAWS 9201EFE		
WH-1	WALL HYDRANT	RECESSED, NON-FREEZE		3/4"				ZURN Z1300		ANTI-SIPHON, OPERATING KEY LOCK, AUTO DRAINING, INTEGRAL BACKFLOW PREVENTER
WH-2	WALL HYDRANT	MODERATE CLIMATE	RESTROOMS	3/4"				ZURN Z1350		ANTI-SIPHON, OPERATING KEY LOCK, AUTO DRAINING, INTEGRAL BACKFLOW PREVENTER
HB-1	HOSE BIBB	WALL MOUNTED HOSE BIBS	MECHANICAL ROOMS	3/4"				CHICAGO MODEL 952-3/4"		
RH-1	ROOF HOSE BIB	ROOF POST TYPE HOSE BIB	ROOF	3/4"				WOODFORD SRH-MS		DRAINLESS ROOF HYDRANT
IMB-1	ICEMAKER BOX		SEE PLANS	1/2"				WATER TITE AB9700 HA SERIES		ALSO USE FOR COFFEEMAKERS
WWB-1	WASHER WALL BOX			3/4'	3/4'	2"	2"	GUY GREY SERIES W4700-HA		
FD-1	FLOOR DRAIN		GENERAL FLOOR DRAINS	SIZES AS NOTED				ZURN Z415-P-VP WITH "-ZB-6B" STRAINER		D.C.C.I. BODY, POLISHED BRONZE GRATE
FD-2	FLOOR DRAIN		GENERAL FLOOR DRAINS	SIZES AS NOTED				ZURN Z415-P-VP WITH VANDER PROOF STRAINER		D.C.C.I. BODY, POLISHED BRONZE GRATE
HR-1	WATER HOSE REEL		SEE PLANS					STRONGWAY WALL MOUNTED FOR 5/8"x150 FT HOSE		
HR-2	COMPRESSED AIR HOSE REEL		SEE PLANS					NORTHERN KLUTCH HEAVY-DUTY AUTO REWIND		
TD-1	TRENCH DRAIN		SEE PLANS					ZURN Z667		LENGTH 24" - 0"
TD-2	TRENCH DRAIN		CRAWL SPACE					ZURN Z886		LENGTH 4' - 0"
FS-1	FLOOR SINK		COOLER	SIZES AS NOTED				ZURN Z1920		D.C.C.I. BODY, ARC INTERIOR
FS-2	FLOOR SINK		MECHANICAL FLOOR SINKS	SIZES AS NOTED				ZURN Z1920-82		D.C.C.I. BODY, ARC INTERIOR
DSN-1	DOWNSPOUT NOZZEL		SEE PLANS	SIZES AS NOTED				ZURN Z199		POLISHED BRONZE
RD-1	ROOF DRAIN	PRIMARY ROOF DRAIN	ALL ROOF LEVELS	SIZES AS NOTED				ZURN Z101		D.C.C.I. BODY WITH COMBINATION MEMBRANE FLASHING CLAMP/GRAVEL GUARD AND LOW SILOUETTE CAST IRON DOME
OD-1	ROOF DRAIN	PRIMARY OVERFLOW ROOF DRAIN	ALL ROOF LEVELS	SIZES AS NOTED				ZURN Z101-W2		D.C.C.I. BODY WITH COMBINATION MEMBRANE FLASHING CLAMP/GRAVEL GUARD AND LOW SILOUETTE CAST IRON DOME

GENERAL NOTES
1. PLUMBING DESIGN AND SIZES ARE BASED ON THE 2015 INTERNATIONAL PLUMBING CODE.
2. ALL EXPOSED PIPING SERVING PLUMBING FIXTURES THAT MAY BE USED FOR ADA PURPOSES SHALL TRAPS AND SUPPLIES INSULATED PER ADA REQUIREMENTS.
3. ALL FIXTURE ARE WHITE UNLESS OTHERWISE NOTED.
4. MOUNTING HEIGHTS OF ALL FIXTURES SHALL BE CLOSELY COORDINATED WITH THE ARCHITECT.
5. PLUMBING CONTRACTOR TO PROVIDE MANUFACTURERS TRANSFORMER FOR HARD WIRED FIXTURES.

DEFINITIONS:
ADA - AMERICANS WITH DISABILITIES ACT APPROVED
BO - BOTTOM OUTLET
EB - ELONGATED BOWL
FM - FLOOR MOUNTED
FP - FREEZE PROOF
FR - FLOW RESTRICTOR
EBF - BATTERY ELECTRONICALLY OPERATED FAUCET
BFV - BATTERY ELECTRONICALLY FLUSH VALVE
PB - PRESSURE BALANCING
PTB - PRESSURE - TEMPERATURE BALANCED
S - SOLID WHITE ELONGATED OPEN FRONT SEAT, LESS COVER WITH CHECK HINGE
SS -STAINLESS STEEL
SC - SOLID WHITE ELONGATED OPEN FRONT SEAT WITH COVER
VB - VACUUM BREAKER
VR - VANDAL RESISTANT
VC - VITREOUS CHINA
WC - WALL FIXTURE CARRIER
WH - WALL HUNG
WO - WALL OUTLET

BRINKLEY SARGENT WIGINTON ARCHITECTS

Architect: Brinkley Sargent Wigginton Architects (972) 960-9970
Landscape: Kendall Landscape Architecture (214) 739-3226
Structural: L.A. Fuess Partners, Inc (214) 593-1118
MEP: M-E Engineers (214) 741-1589
Civil: KSA Engineers, Inc (903) 236-7700
Technology: M-E Engineers (303) 421-6656

LONGVIEW POLICE DEPARTMENT

518 W. SOUTH ST. LONGVIEW, TEXAS 75601

History

#	Date	Description

STATE OF TEXAS
LAUREN F. BERRY
117369
LICENSED
PROFESSIONAL ENGINEER
ME Engineers, Inc.
F-10231
08/19/2020

PLUMBING SCHEDULES

BID ISSUE

20513
08/19/2020
P002

8/17/2020 9:19:48 AM

C:\Revit Projects\2015\LPD_CENTRAL_FY19_rvn-wcrd.rvt

© 2020 Brinkley Sargent Wigginton Architects, Inc.

SUMP PUMP SCHEDULE

CODE	MANUFACTURER	MODEL NUMBER	SERVICE	LOCATION	TYPE	FLOW [GPM]	PRESSURE [FT]	DISCHARGE [IN]	RPM	SUMP SIZE			REMARKS	ELECTRICAL						
										LENGTH [IN]	WIDTH [IN]	HEIGHT [FT]		POWER [HP]	VOLTAGE	PHASE	FLA	DISCONN.	FUSE	FEEDER
SP-1	WEIL	1418	ELEVATOR PIT	ELEVATOR PIT	SUBMERSIBLE	50	30	2	1750	24	24	2	C, D, L	0.75	480	3	1.6	30A/3P	15A LPS-RK	(3#12,#12G) 3/4"
SP-2	WEIL	1418	ELEVATOR PIT	ELEVATOR PIT	SUBMERSIBLE	50	30	2	1750	24	24	2	C, D, L	0.75	480	3	1.6	30A/3P	15A LPS-RK	(3#12,#12G) 3/4"

GENERAL NOTES
1. PROVIDE CHECK VALVE AND SHUTOFF VALVE ON EACH PUMP.
2. PROVIDE PREMIUM EFFICIENCY MOTORS FOR MOTORS 1 HP AND GREATER PER NEMA STANDARD MG1-2003, TABLES 12-12 AND 12-13.

REMARKS
A. PROVIDE QUICK REMOVAL SYSTEM ON SUBMERSIBLE PUMPS.
B. PROVIDE QUICK DISCONNECT PIPING.
C. PROVIDE ON/OFF SWITCH.
D. PROVIDE POURED IN PLACE SUMP IN BOTTOM OF ELEVATOR PIT.
E. SUMP PROVIDED BY OTHERS.
F. PROVIDE GRINDER TYPE PUMP.
G. PROVIDE EXPLOSION PROOF MOTOR.
H. PROVIDE MOISTURE SENSOR ELECTRODE.
I. PROVIDE TEMPERATURE SENSOR.
J. PROVIDE DOUBLE MECHANICAL SEAL.
K. PROVIDE HIGH ALARM.
L. PROVIDE OIL MINDER SYSTEM
M. PROVIDE FLOAT SWITCH ASSEMBLY.

GAS WATER HEATER SCHEDULE

CODE	MANUFACTURER	MODEL NUMBER	SERVICE	LOCATION	TYPE	RECOVERY [GPH @ 100 TR]	STORAGE [GAL]	INPUT [MBH]	OUTPUT [MBH]	FLUE [IN]	REMARKS	VOLTAGE	PHASE	FLA	FUSE	DISCONNECT	FEEDER
GWH-1	PVI	CONQUEST 80 L 130A-GCMLW	BUILDING HOT WATER	MECH ROOM	CONDENSING STORAGE	932	130	800	744	6		120	1	11	-	$TO	(2#12,#12G) 3/4"C
GWH-2	PVI	CONQUEST 80 L 130A-GCMLW	BUILDING HOT WATER	MECH ROOM	CONDENSING STORAGE	932	130	800	744	6		120	1	11	-	$TO	(2#12,#12G) 3/4"C

GENERAL NOTES
1. PROVIDE 120V, 1PH CONTROL CIRCUIT (11 AMPS)
2. PROVIDE WITH A DIRECT COMBUSTION KIT.
3. PROVIDE EXPANSION TANK.

COMPRESSED AIR SCHEDULE

CODE	MANUFACTURER	MODEL NUMBER	SERVICE	LOCATION	TYPE	FLOW [CFM]	PRESSURE [PSI]	STORAGE [GAL]	REMARKS	ELECTRICAL						
										POWER [HP]	VOLTAGE	PHASE	FLA	FUSE	DISCONNECT	FEEDER
AC-1	QUINCY	QT-54		1514	TWO STAGE	15.4	175 MAX	60	1,2,3	5	208	1	28	LPS-RK-40SPI	60A/2P	(2#8,1#10G) 1"C
AD-1	QUINCY	QPNC 25		1514	DESICCANT	25	175 MAX	NA			120	1		THERMAL	OVERLOAD	(2#12,1#12G) 3/4"C

GENERAL NOTES
1. PROVIDE SINGLE POINT ELECTRICAL CONNECTION.
2. PROVIDE ACOUSTICAL PACKAGE.
3. PROVIDE OIL/WATER SEPARATOR, OIL FILTER, AND PARTICULATE FILTERS PER MANUFACTURER'S RECOMMENDATION.
4. PROVIDE ENERGY SAVING CONTROLS.

GENERAL PUMP SCHEDULE

CODE	MANUFACTURER/ MODEL NO.	SERVICE	LOCATION	PUMP TYPE	GPM	RPM	REMARKS	HEAD (EA)...	NPSHR (FT)	ELECTRICAL						
										HP	VOLT	PH	FLA	DISC.	FUSE	FEEDER
DWCP-1	B&G PL-55	DOM. HOT WATER	MECH ROOM	IN-LINE	19	3300	A	30	NA	0.4	120	1	7.2	$TO	-	(2#12,12G) 3/4"
DWCP-2	B&G PL-55	DOM. HOT WATER	MECH ROOM	IN-LINE	19	3300	A	30	NA	0.4	120	1	7.2	$TO	-	(2#12,12G) 3/4"

REMARK NOTES
A. PROVIDE ALL BRONZE CONSTRUCTION (INLINE PUMPS).

BRINKLEY SARGENT WIGINTON ARCHITECTS

Architect: Brinkley Sargent Wigginton Architects (972) 960-9970
Landscape: Kendall Landscape Architecture (214) 739-3226
Structural: L.A. Fuess Partners, Inc (214) 593-1118
MEP: M-E Engineers (214) 741-1589
Civil: KSA Engineers, Inc (903) 236-7700
Technology: M-E Engineers (303) 421-6656

LONGVIEW POLICE DEPARTMENT

518 W. SOUTH ST. LONGVIEW, TEXAS 75601

History

#	Date	Description

STATE OF TEXAS
LAUREN F. BERRY
117369
LICENSED
PROFESSIONAL ENGINEER

ME Engineers, Inc.
F-10231
08/19/2020

PLUMBING SCHEDULES

20513
08/19/2020
P003

BID ISSUE

C:\Revit Projects\2015\LRL_CENTRAL_P19_ceracad.rvt
8/17/2020 9:19:49 AM

© 2020 Brinkley Sargent Wigginton Architects, Inc.

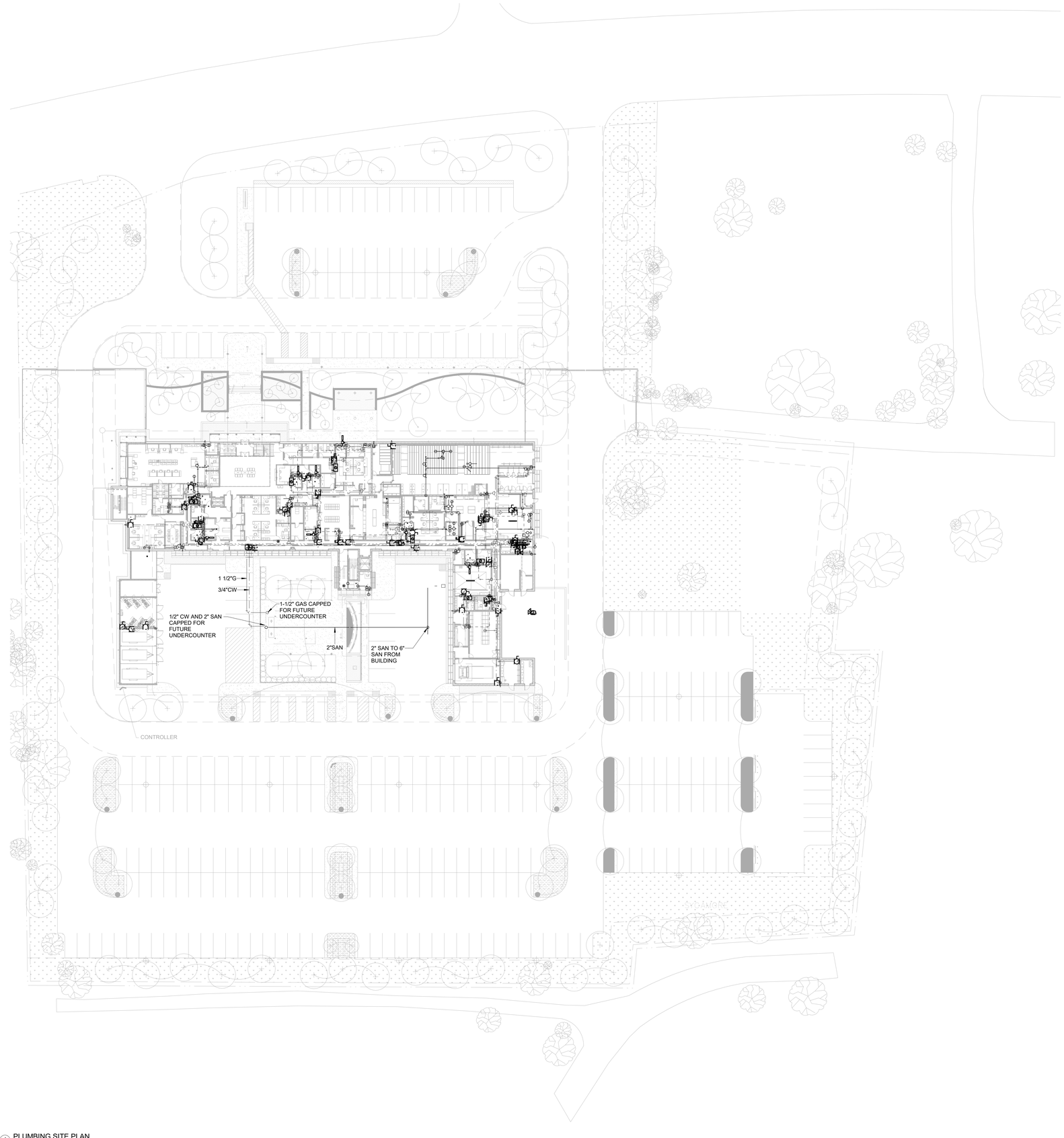

1 PLUMBING SITE PLAN
1" = 30'-0"

GENERAL NOTES:

1. REQUIRED PIPE SIZES ARE SHOWN NEXT TO KEY NOTE.

2.PROVIDE BALL VALVE SHUTOFF AND 12"X12" ACCESS PANEL AT EACH SHOCK ABSORBER (SA). PANEL LOCATION TO BE VERIFIED AND COORDINATED WITH ARCHITECT.

3. PROVIDE 12"X12" ACCESS PANEL AT ALL TRAP PRIMER VALVES. COORDINATE WITH ARCHITECT. IF POSSIBLE, LOCATE TRAP PRIMER VALVES NEAR SHOCK ABSORBERS FOR USE WITH (1) ACCESS PANEL.

4. ALL FLOOR DRAINS ARE 2" FD-1 UNLESS NOTED OTHERWISE.

5. ALL INVERT ELEVATIONS (IE) SHALL BE FIELD VERIFIED BEFORE ANY PIPING IS INSTALLED.

6. ALL CIRCUIT SETTERS SHALL BE SET AT 1.0 GPM UNLESS NOTED OTHERWISE.

KEY NOTES:

(SOME KEY NOTES MAY NOT APPLY TO THIS SHEET)

1. SANITARY PIPING UP
2. SANITARY PIPING DN
3. SANITARY PIPING UP & DN
4. GARAGE DRAIN PIPING UP
5. GARAGE DRAIN PIPING DN
6. GARAGE DRAIN PIPING UP & DN
7. SANITARY VENT UP
8. SANITARY VENT DN
9. SANITARY VENT UP & DN
10. CW PIPING UP
11. CW PIPING DN
12. CW PIPING UP & DN
13. HW PIPING UP
14. HW PIPING DN
15. HW PIPING UP & DN
16. HWC PIPING UP
17. HWC PIPING DN
18. HWC PIPING UP & DN
19. CW & HW PIPING UP
20. CW & HW PIPING DN
21. CW & HW PIPING UP & DN
22. GAS (5 PSI) PIPING UP
23. GAS (5 PSI) PIPING DN
24. GAS (5 PSI) PIPING UP & DN
25. GAS (14" W.C.) PIPING UP
26. GAS (14" W.C.) PIPING DN
27. GAS (14" W.C.) PIPING UP & DN
28. STORM PIPING UP
29. STORM PIPING DN
30. STORM PIPING UP & DN
31. OVERFLOW PIPING UP
32. OVERFLOW PIPING DN
33. OVERFLOW PIPING UP &DN
34. OVERFLOW PIPING DOWN AND THRU WALL TO DOWNSPOUT NOZZLE +12" AFG
35. SANITARY PIPING UP TO PLUMBING FIXTURES
36. PIPING UP TO CLEANOUT
37. CW HEADER
38. HW HEADER
39. CW & HW HEADER
40. 1/2" CW & HW TO EACH LAV/SK
41. CW VALVED & CAPPED FOR FOOD SERVICE
42. HW STUBBED & CAPPED FOR FOOD SERVICE
43. VENT STUBBED & CAPPED FOR FOOD SERVICE
44. SAN STUBBED & CAPPED FOR FOOD SERVICE
45. GW STUBBED & CAPPED FOR FOOD SERVICE
46. GAS (10" WC) VALVED FOR FOOD SERVICE
47. PIPING UP TO DRAIN
48. 1/2" CW & HW DOWN TO SHOWER VALVE & 1/2" UP TO SHOWERHEAD
49. 1/2" CW FROM TRAP PRIMER. ROUTE 1/2" CW LINE(S) DOWN BELOW FLOOR TO FLOOR DRAIN PRIMER TAP.
50. 1/2" CW & HW DOWN IN WALL. BRANCH OFF 3/4" CW & HW TO EACH TUB FILLER FAUCET.
51. DOMESTIC HOT & COLD WATER FOR FUTURE EXTENSION
52. PROVIDE FLEXIBLE EXPANSION JOINT TO ACCOMMODATE 8" OF MOVEMENT. INSTALL PER MANUFACTURER RECOMMENDATIONS.
53. PROVIDE ELECTRICAL POWER FOR HARD WIRED FLUSH VALVES AND FAUCETS IN THIS ROOM.
54. PROVIDE ELECTRICAL POWER FOR HEAT TRACE IN THIS AREA
55. PROVIDE HUB DRAIN ON SANITARY RISER IN WALL MECHANICAL CONDENSATE.

Architect: Brinkley Sargent Wigginton Architects (972) 960-9970
Landscape: Kendall Landscape Architecture (214) 739-3226
Structural: L.A. Fuess Partners, Inc (214) 593-1118
MEP: M-E Engineers (214) 741-1589
Civil: KSA Engineers, Inc (903) 236-7700
Technology: M-E Engineers (303) 421-6656

BRINKLEY SARGENT WIGINTON ARCHITECTS

LONGVIEW POLICE DEPARTMENT

518 W. SOUTH ST. LONGVIEW, TEXAS 75601

History		
#	Date	Description

STATE OF TEXAS
LAUREN F. BERRY
117369
LICENSED
PROFESSIONAL ENGINEER
ME Engineers, Inc.
F-10231
08/19/2020

PLUMBING SITE PLAN

BID ISSUE

20513
08/19/2020
P101

8/17/2020 9:19:53 AM

C:\Revit Projects\2019\LRL_CENTRAL_P19_sam.rvt

© 2020 Brinkley Sargent Wigginton Architects, Inc.

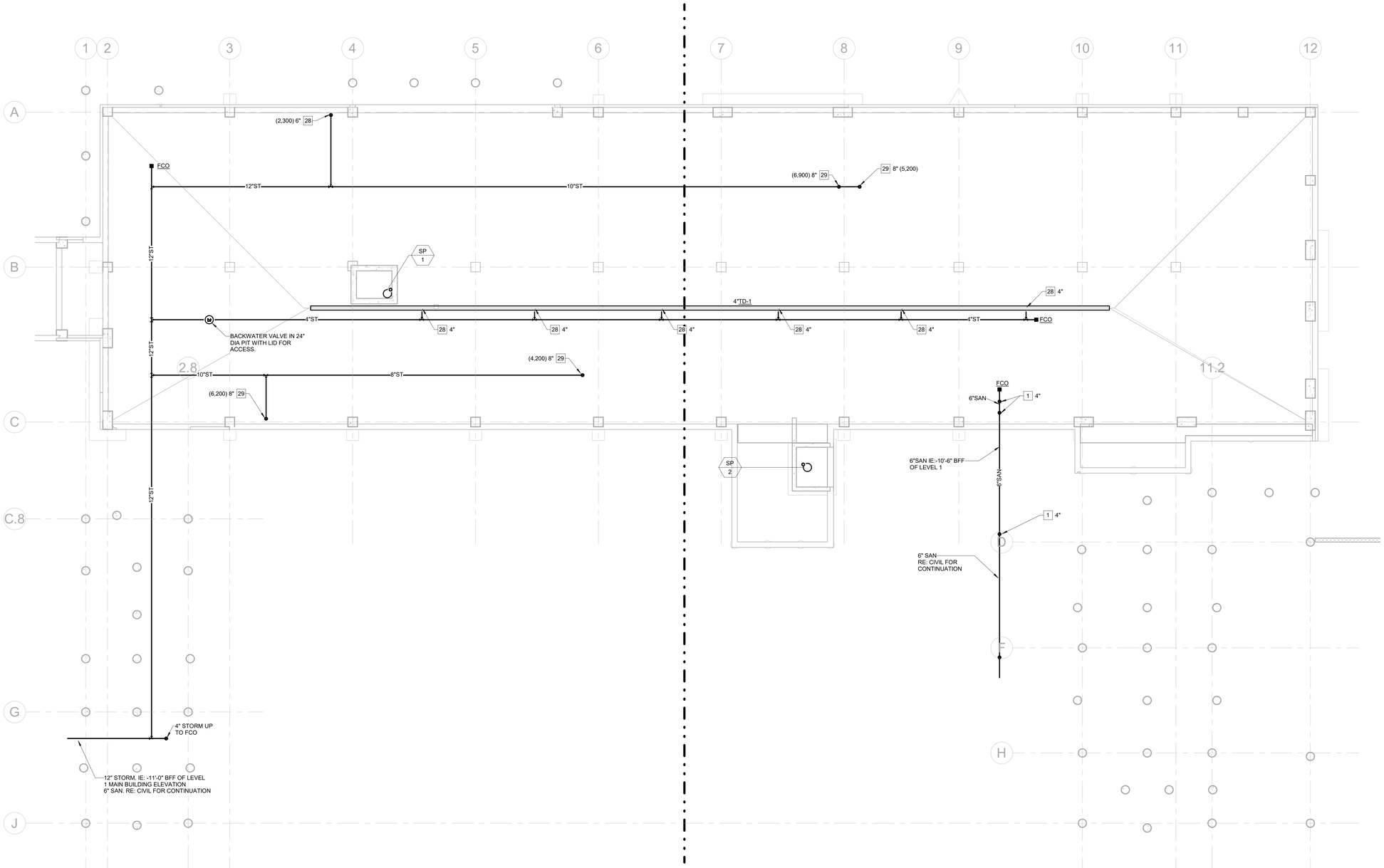

1 LEVEL 1 - CRAWLSPACE UNDERSLAB PLUMBING PLAN
3/32" = 1'-0"

GENERAL NOTES:

1. REQUIRED PIPE SIZES ARE SHOWN NEXT TO KEY NOTE.

2.PROVIDE BALL VALVE SHUTOFF AND 12"X12" ACCESS PANEL AT EACH SHOCK ABSORBER (SA). PANEL LOCATION TO BE VERIFIED AND COORDINATED WITH ARCHITECT.

3. PROVIDE 12"X12" ACCESS PANEL AT ALL TRAP PRIMER VALVES. COORDINATE WITH ARCHITECT. IF POSSIBLE, LOCATE TRAP PRIMER VALVES NEAR SHOCK ABSORBERS FOR USE WITH (1) ACCESS PANEL.

4. ALL FLOOR DRAINS ARE 2" FD-1 UNLESS NOTED OTHERWISE.

5. ALL INVERT ELEVATIONS (IE) SHALL BE FIELD VERIFIED BEFORE ANY PIPING IS INSTALLED.

6. ALL CIRCUIT SETTERS SHALL BE SET AT 1.0 GPM UNLESS NOTED OTHERWISE.

KEY NOTES:

(SOME KEY NOTES MAY NOT APPLY TO THIS SHEET)

1. SANITARY PIPING UP
2. SANITARY PIPING DN
3. SANITARY PIPING UP & DN
4. GARAGE DRAIN PIPING UP
5. GARAGE DRAIN PIPING DN
6. GARAGE DRAIN PIPING UP & DN
7. SANITARY VENT UP
8. SANITARY VENT DN
9. SANITARY VENT UP & DN
10. CW PIPING UP
11. CW PIPING DN
12. CW PIPING UP & DN
13. HW PIPING UP
14. HW PIPING DN
15. HW PIPING UP & DN
16. HWC PIPING UP
17. HWC PIPING DN
18. HWC PIPING UP & DN
19. CW & HW PIPING UP
20. CW & HW PIPING DN
21. CW & HW PIPING UP & DN
22. GAS (5 PSI) PIPING UP
23. GAS (5 PSI) PIPING DN
24. GAS (5 PSI) PIPING UP & DN
25. GAS (14" W.C.) PIPING UP
26. GAS (14" W.C.) PIPING DN
27. GAS (14" W.C.) PIPING UP & DN
28. STORM PIPING UP
29. STORM PIPING DN
30. STORM PIPING UP & DN
31. OVERFLOW PIPING UP
32. OVERFLOW PIPING DN
33. OVERFLOW PIPING UP &DN
34. OVERFLOW PIPING DOWN AND THRU WALL TO DOWNSPOUT NOZZLE +12" AFG
35. SANITARY PIPING UP TO PLUMBING FIXTURES
36. PIPING UP TO CLEANOUT
37. CW HEADER
38. HW HEADER
39. CW & HW HEADER
40. 1/2" CW & HW TO EACH LAV/SK
41. CW VALVED & CAPPED FOR FOOD SERVICE
42. HW STUBBED & CAPPED FOR FOOD SERVICE
43. VENT STUBBED & CAPPED FOR FOOD SERVICE
44. SAN STUBBED & CAPPED FOR FOOD SERVICE
45. GW STUBBED & CAPPED FOR FOOD SERVICE
46. GAS (10" WC) VALVED FOR FOOD SERVICE
47. PIPING UP TO DRAIN
48. 1/2" CW & HW DOWN TO SHOWER VALVE & 1/2" UP TO SHOWERHEAD
49. 1/2" CW FROM TRAP PRIMER. ROUTE 1/2" CW LINE(S) DOWN BELOW FLOOR TO FLOOR DRAIN PRIMER TAP.
50. 1/2" CW & HW DOWN IN WALL. BRANCH OFF 3/4" CW & HW TO EACH TUB FILLER FAUCET.
51. DOMESTIC HOT & COLD WATER FOR FUTURE EXTENSION
52. PROVIDE FLEXIBLE EXPANSION JOINT TO ACCOMMODATE 8" OF MOVEMENT. INSTALL PER MANUFACTURER RECOMMENDATIONS.
53. PROVIDE ELECTRICAL POWER FOR HARD WIRED FLUSH VALVES AND FAUCETS IN THIS ROOM.
54. PROVIDE ELECTRICAL POWER FOR HEAT TRACE IN THIS AREA
55. PROVIDE HUB DRAIN ON SANITARY RISER IN WALL MECHANICAL CONDENSATE.

BRINKLEY SARGENT WIGGINTON ARCHITECTS

Architect: Brinkley Sargent Wigginton Architects (972) 960-9970
Landscape: Kendall Landscape Architecture (214) 739-3226
Structural: L.A. Fuess Partners, Inc (214) 593-1118
MEP: M-E Engineers (214) 741-1589
Civil: KSA Engineers, Inc (903) 236-7700
Technology: M-E Engineers (303) 421-6656

LONGVIEW POLICE DEPARTMENT

518 W. SOUTH ST. LONGVIEW, TEXAS 75601

History		
#	Date	Description

STATE OF TEXAS
LAUREN F. BERRY
117369
LICENSED
PROFESSIONAL ENGINEER
ME Engineers, Inc.
F-10231
08/19/2020

LEVEL 1 - CRAWLSPACE UNDERSLAB PLUMBING PLAN

20513
08/19/2020

P200

BID ISSUE

C:\Revit Projects\2015\JRL_CENTRAL_P19_ver2.rvt

8/17/2020 9:40:44 AM

© 2020 Brinkley Sargent Wigginton Architects, Inc.

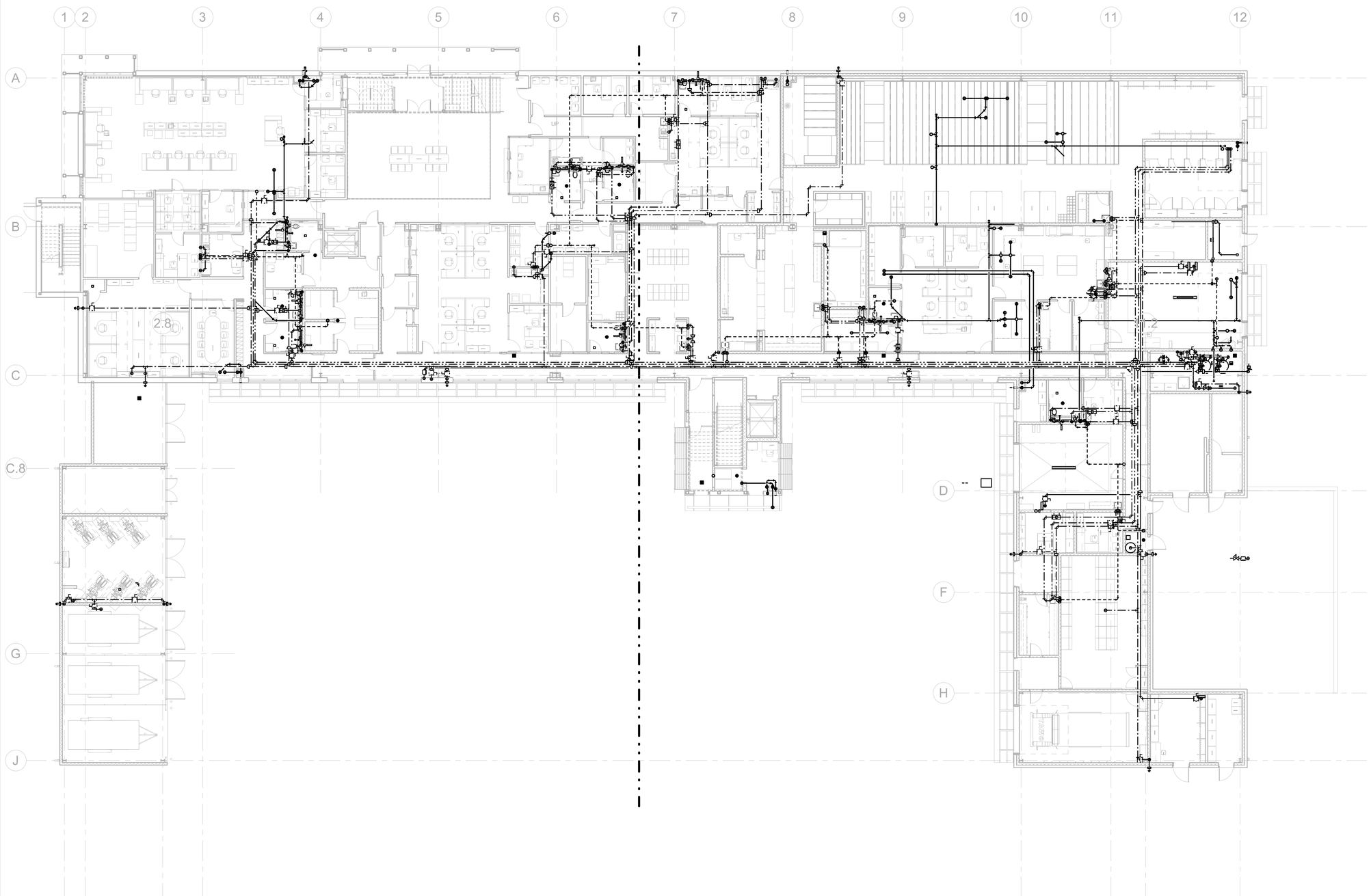

1 LEVEL 1 - PLUMBING OVERALL PLAN
3/32" = 1'-0"

GENERAL NOTES:

1. REQUIRED PIPE SIZES ARE SHOWN NEXT TO KEY NOTE.

2.PROVIDE BALL VALVE SHUTOFF AND 12"X12" ACCESS PANEL AT EACH SHOCK ABSORBER (SA). PANEL LOCATION TO BE VERIFIED AND COORDINATED WITH ARCHITECT.

3. PROVIDE 12"X12" ACCESS PANEL AT ALL TRAP PRIMER VALVES. COORDINATE WITH ARCHITECT. IF POSSIBLE, LOCATE TRAP PRIMER VALVES NEAR SHOCK ABSORBERS FOR USE WITH (1) ACCESS PANEL.

4. ALL FLOOR DRAINS ARE 2" FD-1 UNLESS NOTED OTHERWISE.

5. ALL INVERT ELEVATIONS (IE) SHALL BE FIELD VERIFIED BEFORE ANY PIPING IS INSTALLED.

6. ALL CIRCUIT SETTERS SHALL BE SET AT 1.0 GPM UNLESS NOTED OTHERWISE.

KEY NOTES:

(SOME KEY NOTES MAY NOT APPLY TO THIS SHEET)

1. SANITARY PIPING UP
2. SANITARY PIPING DN
3. SANITARY PIPING UP & DN
4. GARAGE DRAIN PIPING UP
5. GARAGE DRAIN PIPING DN
6. GARAGE DRAIN PIPING UP & DN
7. SANITARY VENT UP
8. SANITARY VENT DN
9. SANITARY VENT UP & DN
10. CW PIPING UP
11. CW PIPING DN
12. CW PIPING UP & DN
13. HW PIPING UP
14. HW PIPING DN
15. HW PIPING UP & DN
16. HWC PIPING UP
17. HWC PIPING DN
18. HWC PIPING UP & DN
19. CW & HW PIPING UP
20. CW & HW PIPING DN
21. CW & HW PIPING UP & DN
22. GAS (5 PSI) PIPING UP
23. GAS (5 PSI) PIPING DN
24. GAS (5 PSI) PIPING UP & DN
25. GAS (14" W.C.) PIPING UP
26. GAS (14" W.C.) PIPING DN
27. GAS (14" W.C.) PIPING UP & DN
28. STORM PIPING UP
29. STORM PIPING DN
30. STORM PIPING UP & DN
31. OVERFLOW PIPING UP
32. OVERFLOW PIPING DN
33. OVERFLOW PIPING UP &DN
34. OVERFLOW PIPING DOWN AND THRU WALL TO DOWNSPOUT NOZZLE +12" AFG
35. SANITARY PIPING UP TO PLUMBING FIXTURES
36. PIPING UP TO CLEANOUT
37. CW HEADER
38. HW HEADER
39. CW & HW HEADER
40. 1/2" CW & HW TO EACH LAV/SK
41. CW VALVED & CAPPED FOR FOOD SERVICE
42. HW STUBBED & CAPPED FOR FOOD SERVICE
43. VENT STUBBED & CAPPED FOR FOOD SERVICE
44. SAN STUBBED & CAPPED FOR FOOD SERVICE
45. GW STUBBED & CAPPED FOR FOOD SERVICE
46. GAS (10" WC) VALVED FOR FOOD SERVICE
47. PIPING UP TO DRAIN
48. 1/2" CW & HW DOWN TO SHOWER VALVE & 1/2" UP TO SHOWERHEAD
49. 1/2" CW FROM TRAP PRIMER, ROUTE 1/2" CW LINE(S) DOWN BELOW FLOOR TO FLOOR DRAIN PRIMER TAP.
50. 1/2" CW & HW DOWN IN WALL, BRANCH OFF 3/4" CW & HW TO EACH TUB FILLER FAUCET.
51. DOMESTIC HOT & COLD WATER FOR FUTURE EXTENSION
52. PROVIDE FLEXIBLE EXPANSION JOINT TO ACCOMMODATE 8" OF MOVEMENT. INSTALL PER MANUFACTURER RECOMMENDATIONS.
53. PROVIDE ELECTRICAL POWER FOR HARD WIRED FLUSH VALVES AND FAUCETS IN THIS ROOM.
54. PROVIDE ELECTRICAL POWER FOR HEAT TRACE IN THIS AREA
55. PROVIDE HUB DRAIN ON SANITARY RISER IN WALL MECHANICAL CONDENSATE.

Architect: Brinkley Sargent Wigginton Architects (972) 960-9970
Landscape: Kendall Landscape Architecture (214) 739-3226
Structural: L.A. Fuess Partners, Inc (214) 593-1118
MEP: M-E Engineers (214) 741-1589
Civil: KSA Engineers, Inc (903) 236-7700
Technology: M-E Engineers (303) 421-6656

BRINKLEY SARGENT WIGINTON ARCHITECTS

LONGVIEW POLICE DEPARTMENT

518 W. SOUTH ST. LONGVIEW, TEXAS 75601

History		
#	Date	Description

STATE OF TEXAS
LAUREN F. BERRY
117369
LICENSED
PROFESSIONAL ENGINEER
ME Engineers, Inc.
F-10231
08/19/2020

LEVEL 1 - PLUMBING OVERALL PLAN

20513
08/19/2020

P210

BID ISSUE

8/17/2020 9:40:48 AM
C:\Revit Projects\2019\LRL_CENTRAL_P19_rvt\P210.rvt

© 2020 Brinkley Sargent Wigginton Architects, Inc.

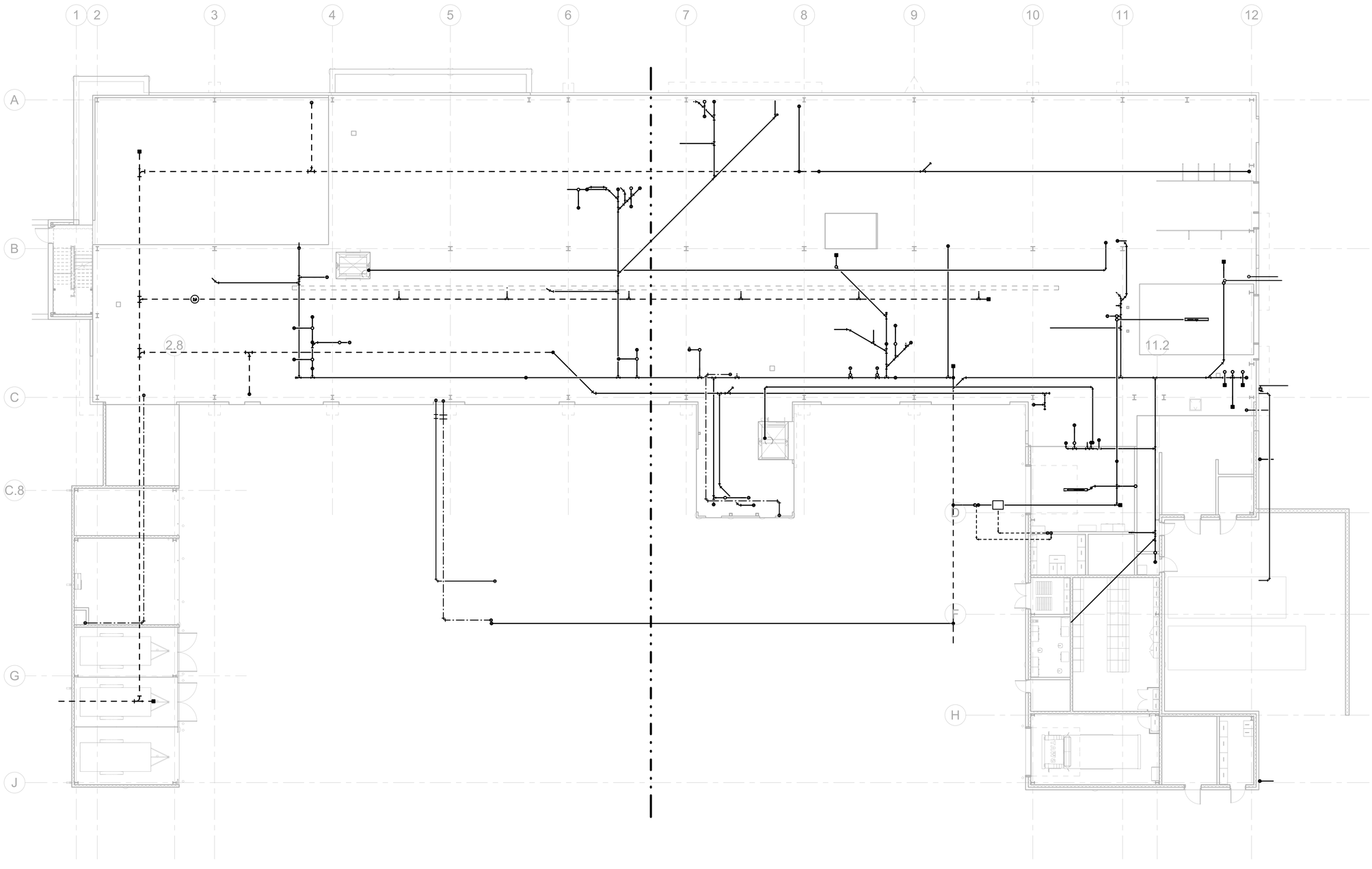

1 LEVEL 1 - CRAWLSPACE OVERALL PLUMBING PLAN
3/32" = 1'-0"

GENERAL NOTES:

1. REQUIRED PIPE SIZES ARE SHOWN NEXT TO KEY NOTE.

2.PROVIDE BALL VALVE SHUTOFF AND 12"X12" ACCESS PANEL AT EACH SHOCK ABSORBER (SA). PANEL LOCATION TO BE VERIFIED AND COORDINATED WITH ARCHITECT.

3. PROVIDE 12"X12" ACCESS PANEL AT ALL TRAP PRIMER VALVES. COORDINATE WITH ARCHITECT. IF POSSIBLE, LOCATE TRAP PRIMER VALVES NEAR SHOCK ABSORBERS FOR USE WITH (1) ACCESS PANEL.

4. ALL FLOOR DRAINS ARE 2" FD-1 UNLESS NOTED OTHERWISE.

5. ALL INVERT ELEVATIONS (IE) SHALL BE FIELD VERIFIED BEFORE ANY PIPING IS INSTALLED.

6. ALL CIRCUIT SETTERS SHALL BE SET AT 1.0 GPM UNLESS NOTED OTHERWISE.

KEY NOTES:

(SOME KEY NOTES MAY NOT APPLY TO THIS SHEET)

1. SANITARY PIPING UP
2. SANITARY PIPING DN
3. SANITARY PIPING UP & DN
4. GARAGE DRAIN PIPING UP
5. GARAGE DRAIN PIPING DN
6. GARAGE DRAIN PIPING UP & DN
7. SANITARY VENT UP
8. SANITARY VENT DN
9. SANITARY VENT UP & DN
10. CW PIPING UP
11. CW PIPING DN
12. CW PIPING UP & DN
13. HW PIPING UP
14. HW PIPING DN
15. HW PIPING UP & DN
16. HWC PIPING UP
17. HWC PIPING DN
18. HWC PIPING UP & DN
19. CW & HW PIPING UP
20. CW & HW PIPING DN
21. CW & HW PIPING UP & DN
22. GAS (5 PSI) PIPING UP
23. GAS (5 PSI) PIPING DN
24. GAS (5 PSI) PIPING UP & DN
25. GAS (14" W.C.) PIPING UP
26. GAS (14" W.C.) PIPING DN
27. GAS (14" W.C.) PIPING UP & DN
28. STORM PIPING UP
29. STORM PIPING DN
30. STORM PIPING UP & DN
31. OVERFLOW PIPING UP
32. OVERFLOW PIPING DN
33. OVERFLOW PIPING UP &DN
34. OVERFLOW PIPING DOWN AND THRU WALL TO DOWNSPOUT NOZZLE +12" AFG
35. SANITARY PIPING UP TO PLUMBING FIXTURES
36. PIPING UP TO CLEANOUT
37. CW HEADER
38. HW HEADER
39. CW & HW HEADER
40. 1/2" CW & HW TO EACH LAV/SK
41. CW VALVED & CAPPED FOR FOOD SERVICE
42. HW STUBBED & CAPPED FOR FOOD SERVICE
43. VENT STUBBED & CAPPED FOR FOOD SERVICE
44. SAN STUBBED & CAPPED FOR FOOD SERVICE
45. GW STUBBED & CAPPED FOR FOOD SERVICE
46. GAS (10" WC) VALVED FOR FOOD SERVICE
47. PIPING UP TO DRAIN
48. 1/2" CW & HW DOWN TO SHOWER VALVE & 1/2" UP TO SHOWERHEAD
49. 1/2" CW FROM TRAP PRIMER. ROUTE 1/2" CW LINE(S) DOWN BELOW FLOOR TO FLOOR DRAIN PRIMER TAP.
50. 1/2" CW & HW DOWN IN WALL. BRANCH OFF 3/4" CW & HW TO EACH TUB FILLER FAUCET.
51. DOMESTIC HOT & COLD WATER FOR FUTURE EXTENSION
52. PROVIDE FLEXIBLE EXPANSION JOINT TO ACCOMMODATE 8" OF MOVEMENT. INSTALL PER MANUFACTURER RECOMMENDATIONS.
53. PROVIDE ELECTRICAL POWER FOR HARD WIRED FLUSH VALVES AND FAUCETS IN THIS ROOM.
54. PROVIDE ELECTRICAL POWER FOR HEAT TRACE IN THIS AREA
55. PROVIDE HUB DRAIN ON SANITARY RISER IN WALL MECHANICAL CONDENSATE.

BRINKLEY SARGENT WIGINTON ARCHITECTS

Architect: Brinkley Sargent Wigginton Architects (972) 960-9970
Landscape: Kendall Landscape Architecture (214) 739-3226
Structural: L.A. Fuess Partners, Inc (214) 593-1118
MEP: M-E Engineers (214) 741-1589
Civil: KSA Engineers, Inc (903) 236-7700
Technology: M-E Engineers (303) 421-6656

LONGVIEW POLICE DEPARTMENT

518 W. SOUTH ST. LONGVIEW, TEXAS 75601

History		
#	Date	Description

STATE OF TEXAS
LAUREN F. BERRY
117369
LICENSED
PROFESSIONAL ENGINEER
ME Engineers, Inc.
F-10231
08/19/2020

LEVEL 1 - CRAWLSPACE OVERALL PLUMBING PLAN

20513
08/19/2020
P210U

BID ISSUE

8/17/2020 9:20:24 AM

C:\Revit Projects\2019\LPD_CENTRAL_R19_sen.wcnd.rvt

© 2020 Brinkley Sargent Wigginton Architects, Inc.

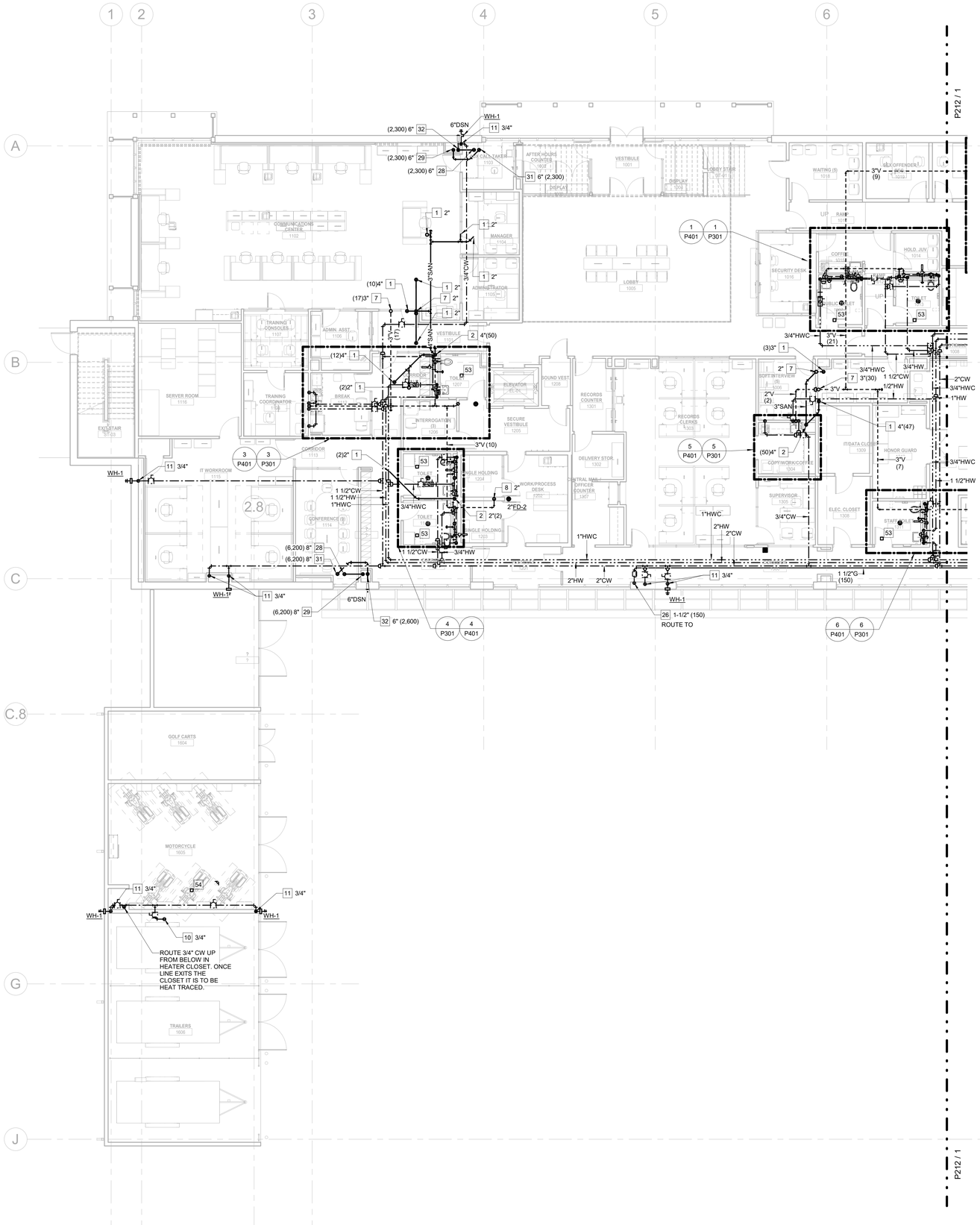

1 LEVEL 1 - PLUMBING PLAN - WEST
1/8" = 1'-0"

GENERAL NOTES:

1. REQUIRED PIPE SIZES ARE SHOWN NEXT TO KEY NOTE.

2.PROVIDE BALL VALVE SHUTOFF AND 12"X12" ACCESS PANEL AT EACH SHOCK ABSORBER (SA). PANEL LOCATION TO BE VERIFIED AND COORDINATED WITH ARCHITECT.

3. PROVIDE 12"X12" ACCESS PANEL AT ALL TRAP PRIMER VALVES. COORDINATE WITH ARCHITECT. IF POSSIBLE, LOCATE TRAP PRIMER VALVES NEAR SHOCK ABSORBERS FOR USE WITH (1) ACCESS PANEL.

4. ALL FLOOR DRAINS ARE 2" FD-1 UNLESS NOTED OTHERWISE.

5. ALL INVERT ELEVATIONS (IE) SHALL BE FIELD VERIFIED BEFORE ANY PIPING IS INSTALLED.

6. ALL CIRCUIT SETTERS SHALL BE SET AT 1.0 GPM UNLESS NOTED OTHERWISE.

KEY NOTES:

(SOME KEY NOTES MAY NOT APPLY TO THIS SHEET)

1. SANITARY PIPING UP
2. SANITARY PIPING DN
3. SANITARY PIPING UP & DN
4. GARAGE DRAIN PIPING UP
5. GARAGE DRAIN PIPING DN
6. GARAGE DRAIN PIPING UP & DN
7. SANITARY VENT UP
8. SANITARY VENT DN
9. SANITARY VENT UP & DN
10. CW PIPING UP
11. CW PIPING DN
12. CW PIPING UP & DN
13. HW PIPING UP
14. HW PIPING DN
15. HW PIPING UP & DN
16. HWC PIPING UP
17. HWC PIPING DN
18. HWC PIPING UP & DN
19. CW & HW PIPING UP
20. CW & HW PIPING DN
21. CW & HW PIPING UP & DN
22. GAS (5 PSI) PIPING UP
23. GAS (5 PSI) PIPING DN
24. GAS (5 PSI) PIPING UP & DN
25. GAS (14" W.C.) PIPING UP
26. GAS (14" W.C.) PIPING DN
27. GAS (14" W.C.) PIPING UP & DN
28. STORM PIPING UP
29. STORM PIPING DN
30. STORM PIPING UP & DN
31. OVERFLOW PIPING UP
32. OVERFLOW PIPING DN
33. OVERFLOW PIPING UP &DN
34. OVERFLOW PIPING DOWN AND THRU WALL TO DOWNSPOUT NOZZLE +12" AFG
35. SANITARY PIPING UP TO PLUMBING FIXTURES
36. PIPING UP TO CLEANOUT
37. CW HEADER
38. HW HEADER
39. CW & HW HEADER
40. 1/2" CW & HW TO EACH LAV/SK
41. CW VALVED & CAPPED FOR FOOD SERVICE
42. HW STUBBED & CAPPED FOR FOOD SERVICE
43. VENT STUBBED & CAPPED FOR FOOD SERVICE
44. SAN STUBBED & CAPPED FOR FOOD SERVICE
45. GW STUBBED & CAPPED FOR FOOD SERVICE
46. GAS (10" WC) VALVED FOR FOOD SERVICE
47. PIPING UP TO DRAIN
48. 1/2" CW & HW DOWN TO SHOWER VALVE & 1/2" UP TO SHOWERHEAD
49. 1/2" CW FROM TRAP PRIMER. ROUTE 1/2" CW LINE(S) DOWN BELOW FLOOR TO FLOOR DRAIN PRIMER TAP.
50. 1/2" CW & HW DOWN IN WALL. BRANCH OFF 3/4" CW & HW TO EACH TUB FILLER FAUCET.
51. DOMESTIC HOT & COLD WATER FOR FUTURE EXTENSION
52. PROVIDE FLEXIBLE EXPANSION JOINT TO ACCOMMODATE 8" OF MOVEMENT. INSTALL PER MANUFACTURER RECOMMENDATIONS.
53. PROVIDE ELECTRICAL POWER FOR HARD WIRED FLUSH VALVES AND FAUCETS IN THIS ROOM.
54. PROVIDE ELECTRICAL POWER FOR HEAT TRACE IN THIS AREA
55. PROVIDE HUB DRAIN ON SANITARY RISER IN WALL MECHANICAL CONDENSATE.

BRINKLEY SARGENT WIGINTON ARCHITECTS

Architect: Brinkley Sargent Wigginton Architects (972) 960-9970
Landscape: Kendall Landscape Architecture (214) 739-3226
Structural: L.A. Fuess Partners, Inc (214) 593-1118
MEP: M-E Engineers (214) 741-1589
Civil: KSA Engineers, Inc (903) 236-7700
Technology: M-E Engineers (303) 421-6656

LONGVIEW POLICE DEPARTMENT

518 W. SOUTH ST. LONGVIEW, TEXAS 75601

History		
#	Date	Description

LICENSED PROFESSIONAL ENGINEER
LAUREN F. BERRY
117369
STATE OF TEXAS
ME Engineers, Inc.
F-10231
08/19/2020

LEVEL 1 - PLUMBING PLAN - WEST

BID ISSUE

20513
08/19/2020
P211

6/17/2020 9:42:50 AM

C:\Revit Projects\2019\JRL_CENTRAL_FY19_corr.wsrd.rvt

© 2020 Brinkley Sargent Wigginton Architects, Inc.

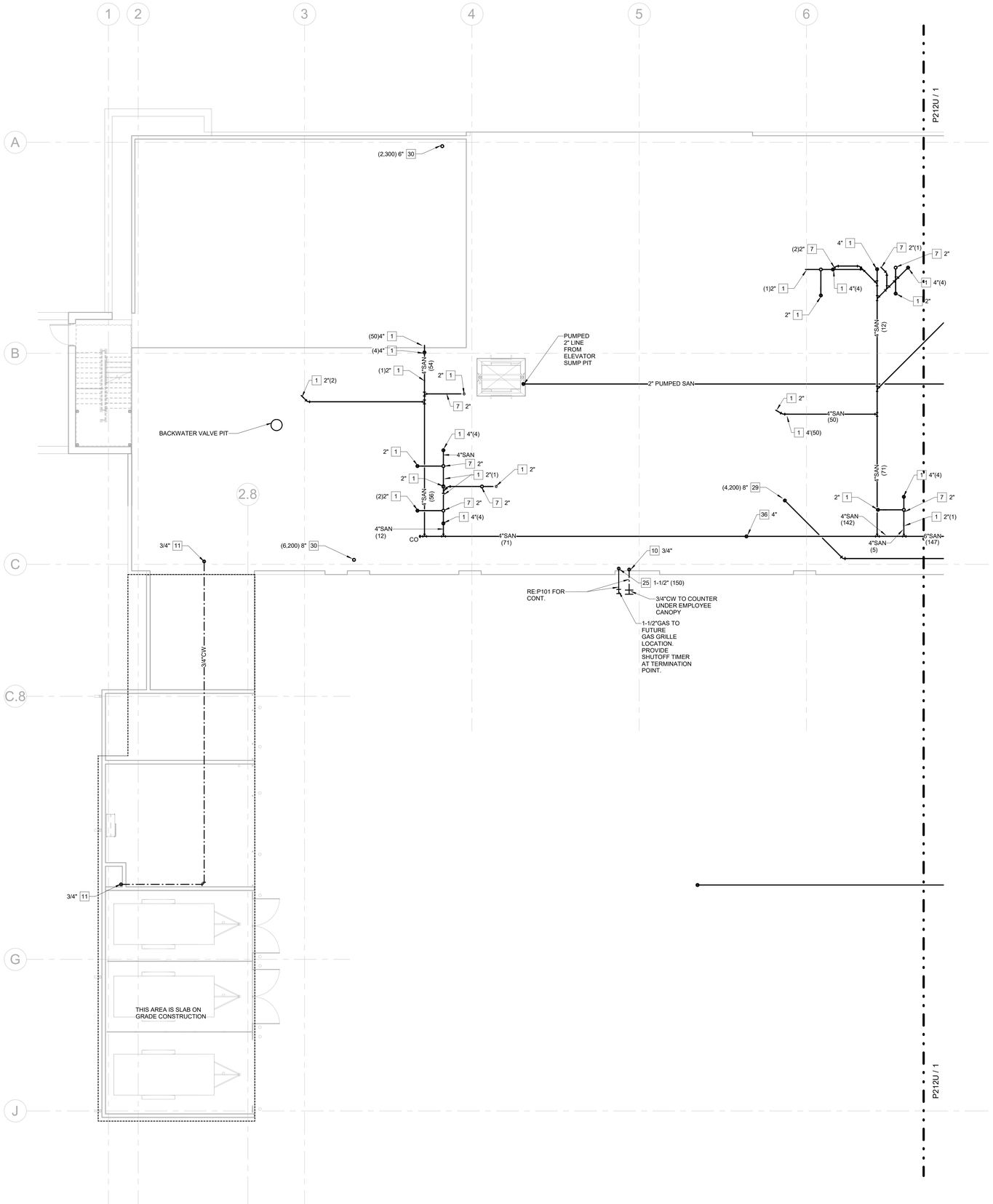

1 LEVEL 1 - CRAWLSPACE PLUMBING PLAN - WEST
1/8" = 1'-0"

GENERAL NOTES:

1. REQUIRED PIPE SIZES ARE SHOWN NEXT TO KEY NOTE.

2.PROVIDE BALL VALVE SHUTOFF AND 12"X12" ACCESS PANEL AT EACH SHOCK ABSORBER (SA). PANEL LOCATION TO BE VERIFIED AND COORDINATED WITH ARCHITECT.

3. PROVIDE 12"X12" ACCESS PANEL AT ALL TRAP PRIMER VALVES. COORDINATE WITH ARCHITECT. IF POSSIBLE, LOCATE TRAP PRIMER VALVES NEAR SHOCK ABSORBERS FOR USE WITH (1) ACCESS PANEL.

4. ALL FLOOR DRAINS ARE 2" FD-1 UNLESS NOTED OTHERWISE.

5. ALL INVERT ELEVATIONS (IE) SHALL BE FIELD VERIFIED BEFORE ANY PIPING IS INSTALLED.

6. ALL CIRCUIT SETTERS SHALL BE SET AT 1.0 GPM UNLESS NOTED OTHERWISE.

KEY NOTES:

(SOME KEY NOTES MAY NOT APPLY TO THIS SHEET)

1. SANITARY PIPING UP
2. SANITARY PIPING DN
3. SANITARY PIPING UP & DN
4. GARAGE DRAIN PIPING UP
5. GARAGE DRAIN PIPING DN
6. GARAGE DRAIN PIPING UP & DN
7. SANITARY VENT UP
8. SANITARY VENT DN
9. SANITARY VENT UP & DN
10. CW PIPING UP
11. CW PIPING DN
12. CW PIPING UP & DN
13. HW PIPING UP
14. HW PIPING DN
15. HW PIPING UP & DN
16. HWC PIPING UP
17. HWC PIPING DN
18. HWC PIPING UP & DN
19. CW & HW PIPING UP
20. CW & HW PIPING DN
21. CW & HW PIPING UP & DN
22. GAS (5 PSI) PIPING UP
23. GAS (5 PSI) PIPING DN
24. GAS (5 PSI) PIPING UP & DN
25. GAS (14" W.C.) PIPING UP
26. GAS (14" W.C.) PIPING DN
27. GAS (14" W.C.) PIPING UP & DN
28. STORM PIPING UP
29. STORM PIPING DN
30. STORM PIPING UP & DN
31. OVERFLOW PIPING UP
32. OVERFLOW PIPING DN
33. OVERFLOW PIPING UP &DN
34. OVERFLOW PIPING DOWN AND THRU WALL TO DOWNSPOUT NOZZLE +12" AFG
35. SANITARY PIPING UP TO PLUMBING FIXTURES
36. PIPING UP TO CLEANOUT
37. CW HEADER
38. HW HEADER
39. CW & HW HEADER
40. 1/2" CW & HW TO EACH LAV/SK
41. CW VALVED & CAPPED FOR FOOD SERVICE
42. HW STUBBED & CAPPED FOR FOOD SERVICE
43. VENT STUBBED & CAPPED FOR FOOD SERVICE
44. SAN STUBBED & CAPPED FOR FOOD SERVICE
45. GW STUBBED & CAPPED FOR FOOD SERVICE
46. GAS (10" WC) VALVED FOR FOOD SERVICE
47. PIPING UP TO DRAIN
48. 1/2" CW & HW DOWN TO SHOWER VALVE & 1/2" UP TO SHOWERHEAD
49. 1/2" CW FROM TRAP PRIMER. ROUTE 1/2" CW LINE(S) DOWN BELOW FLOOR TO FLOOR DRAIN PRIMER TAP.
50. 1/2" CW & HW DOWN IN WALL. BRANCH OFF 3/4" CW & HW TO EACH TUB FILLER FAUCET.
51. DOMESTIC HOT & COLD WATER FOR FUTURE EXTENSION
52. PROVIDE FLEXIBLE EXPANSION JOINT TO ACCOMMODATE 8" OF MOVEMENT. INSTALL PER MANUFACTURER RECOMMENDATIONS.
53. PROVIDE ELECTRICAL POWER FOR HARD WIRED FLUSH VALVES AND FAUCETS IN THIS ROOM.
54. PROVIDE ELECTRICAL POWER FOR HEAT TRACE IN THIS AREA
55. PROVIDE HUB DRAIN ON SANITARY RISER IN WALL MECHANICAL CONDENSATE.

BRINKLEY SARGENT WIGGINTON ARCHITECTS

Architect: Brinkley Sargent Wigginton Architects (972) 960-9970
Landscape: Kendall Landscape Architecture (214) 739-3226
Structural: L.A. Fuess Partners, Inc (214) 593-1118
MEP: M-E Engineers (214) 741-1589
Civil: KSA Engineers, Inc (903) 236-7700
Technology: M-E Engineers (303) 421-6656

LONGVIEW POLICE DEPARTMENT

518 W. SOUTH ST. LONGVIEW, TEXAS 75601

History		
#	Date	Description

STATE OF TEXAS
LAUREN F. BERRY
117369
LICENSED PROFESSIONAL ENGINEER
ME Engineers, Inc.
F-10231
08/19/2020

LEVEL 1 - CRAWLSPACE PLUMBING PLAN - WEST

20513
08/19/2020
P211U

BID ISSUE

8/17/2020 9:20:15 AM

C:\Work Projects\2019\LPD_CENTRAL_P19_ian-ward.rvt

© 2020 Brinkley Sargent Wigginton Architects, Inc.

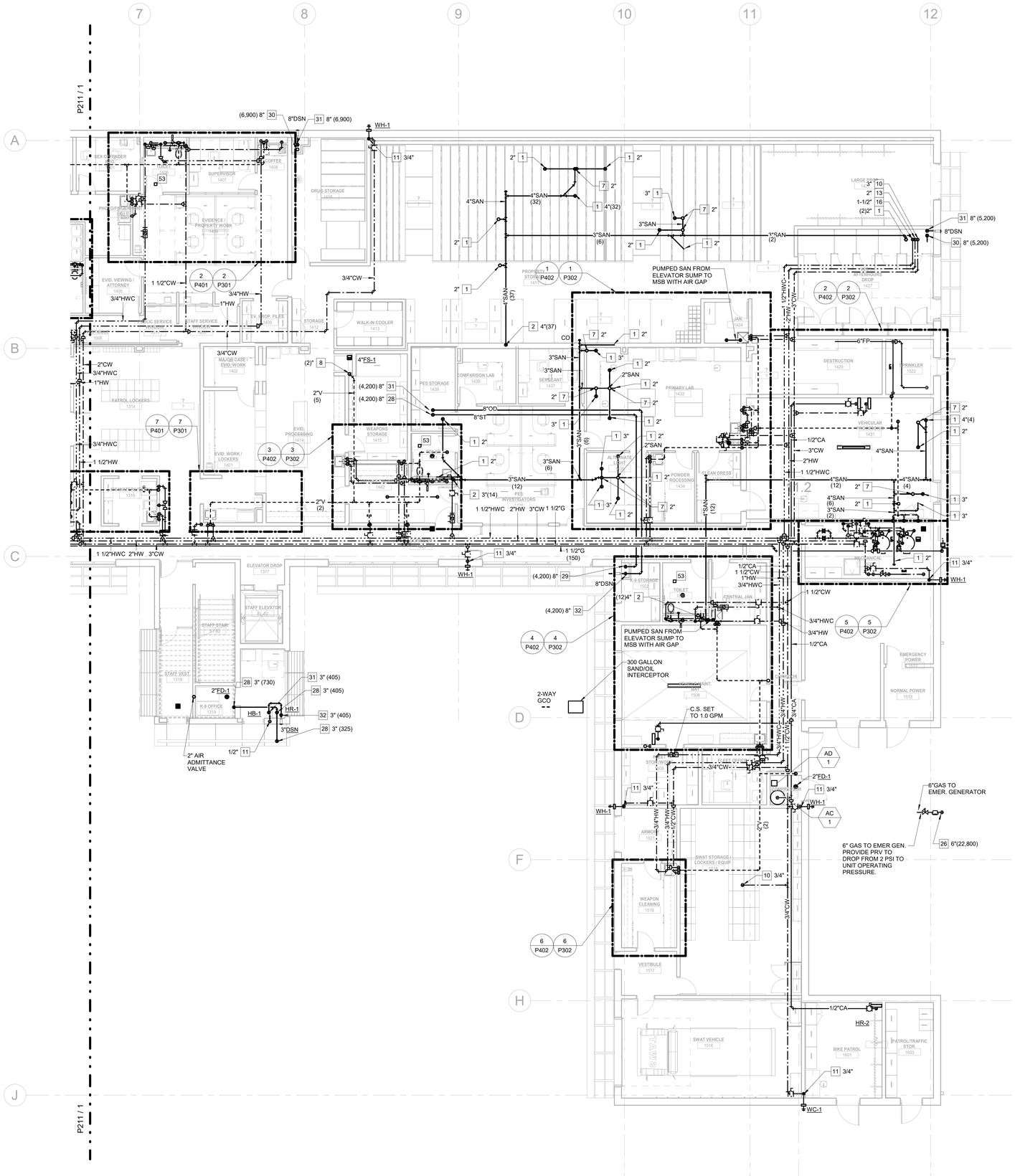

1 LEVEL 1 - PLUMBING PLAN - EAST
1/8" = 1'-0"

GENERAL NOTES:

1. REQUIRED PIPE SIZES ARE SHOWN NEXT TO KEY NOTE.

2.PROVIDE BALL VALVE SHUTOFF AND 12"X12" ACCESS PANEL AT EACH SHOCK ABSORBER (SA). PANEL LOCATION TO BE VERIFIED AND COORDINATED WITH ARCHITECT.

3. PROVIDE 12"X12" ACCESS PANEL AT ALL TRAP PRIMER VALVES. COORDINATE WITH ARCHITECT. IF POSSIBLE, LOCATE TRAP PRIMER VALVES NEAR SHOCK ABSORBERS FOR USE WITH (1) ACCESS PANEL.

4. ALL FLOOR DRAINS ARE 2" FD-1 UNLESS NOTED OTHERWISE.

5. ALL INVERT ELEVATIONS (IE) SHALL BE FIELD VERIFIED BEFORE ANY PIPING IS INSTALLED.

6. ALL CIRCUIT SETTERS SHALL BE SET AT 1.0 GPM UNLESS NOTED OTHERWISE.

KEY NOTES:

(SOME KEY NOTES MAY NOT APPLY TO THIS SHEET)

1. SANITARY PIPING UP
2. SANITARY PIPING DN
3. SANITARY PIPING UP & DN
4. GARAGE DRAIN PIPING UP
5. GARAGE DRAIN PIPING DN
6. GARAGE DRAIN PIPING UP & DN
7. SANITARY VENT UP
8. SANITARY VENT DN
9. SANITARY VENT UP & DN
10. CW PIPING UP
11. CW PIPING DN
12. CW PIPING UP & DN
13. HW PIPING UP
14. HW PIPING DN
15. HW PIPING UP & DN
16. HWC PIPING UP
17. HWC PIPING DN
18. HWC PIPING UP & DN
19. CW & HW PIPING UP
20. CW & HW PIPING DN
21. CW & HW PIPING UP & DN
22. GAS (5 PSI) PIPING UP
23. GAS (5 PSI) PIPING DN
24. GAS (5 PSI) PIPING UP & DN
25. GAS (14" W.C.) PIPING UP
26. GAS (14" W.C.) PIPING DN
27. GAS (14" W.C.) PIPING UP & DN
28. STORM PIPING UP
29. STORM PIPING DN
30. STORM PIPING UP & DN
31. OVERFLOW PIPING UP
32. OVERFLOW PIPING DN
33. OVERFLOW PIPING UP &DN
34. OVERFLOW PIPING DOWN AND THRU WALL TO DOWNSPOUT NOZZLE +12" AFG
35. SANITARY PIPING UP TO PLUMBING FIXTURES
36. PIPING UP TO CLEANOUT
37. CW HEADER
38. HW HEADER
39. CW & HW HEADER
40. 1/2" CW & HW TO EACH LAV/SK
41. CW VALVED & CAPPED FOR FOOD SERVICE
42. HW STUBBED & CAPPED FOR FOOD SERVICE
43. VENT STUBBED & CAPPED FOR FOOD SERVICE
44. SAN STUBBED & CAPPED FOR FOOD SERVICE
45. GW STUBBED & CAPPED FOR FOOD SERVICE
46. GAS (10" WC) VALVED FOR FOOD SERVICE
47. PIPING UP TO DRAIN
48. 1/2" CW & HW DOWN TO SHOWER VALVE & 1/2" UP TO SHOWERHEAD
49. 1/2" CW FROM TRAP PRIMER. ROUTE 1/2" CW LINE(S) DOWN BELOW FLOOR TO FLOOR DRAIN PRIMER TAP.
50. 1/2" CW & HW DOWN IN WALL. BRANCH OFF 3/4" CW & HW TO EACH TUB FILLER FAUCET.
51. DOMESTIC HOT & COLD WATER FOR FUTURE EXTENSION
52. PROVIDE FLEXIBLE EXPANSION JOINT TO ACCOMMODATE 8" OF MOVEMENT. INSTALL PER MANUFACTURER RECOMMENDATIONS.
53. PROVIDE ELECTRICAL POWER FOR HARD WIRED FLUSH VALVES AND FAUCETS IN THIS ROOM.
54. PROVIDE ELECTRICAL POWER FOR HEAT TRACE IN THIS AREA
55. PROVIDE HUB DRAIN ON SANITARY RISER IN WALL MECHANICAL CONDENSATE.

Architect: Brinkley Sargent Wigginton Architects (972) 960-9970
Landscape: Kendall Landscape Architecture (214) 739-3226
Structural: L.A. Fuess Partners, Inc (214) 593-1118
MEP: M-E Engineers (214) 741-1589
Civil: KSA Engineers, Inc (903) 236-7700
Technology: M-E Engineers (303) 421-6656

BRINKLEY SARGENT WIGINTON ARCHITECTS

LONGVIEW POLICE DEPARTMENT

518 W. SOUTH ST. LONGVIEW, TEXAS 75601

History		
#	Date	Description

STATE OF TEXAS
LAUREN F. BERRY
117369
LICENSED PROFESSIONAL ENGINEER
ME Engineers, Inc.
F-10231
08/19/2020

LEVEL 1 - PLUMBING PLAN - EAST

BID ISSUE

20513
08/19/2020
P212

6/17/2020 9:20:23 AM

C:\Revit Projects\2019\LPD_CENTRAL_P19_revit.rvt

© 2020 Brinkley Sargent Wigginton Architects, Inc.

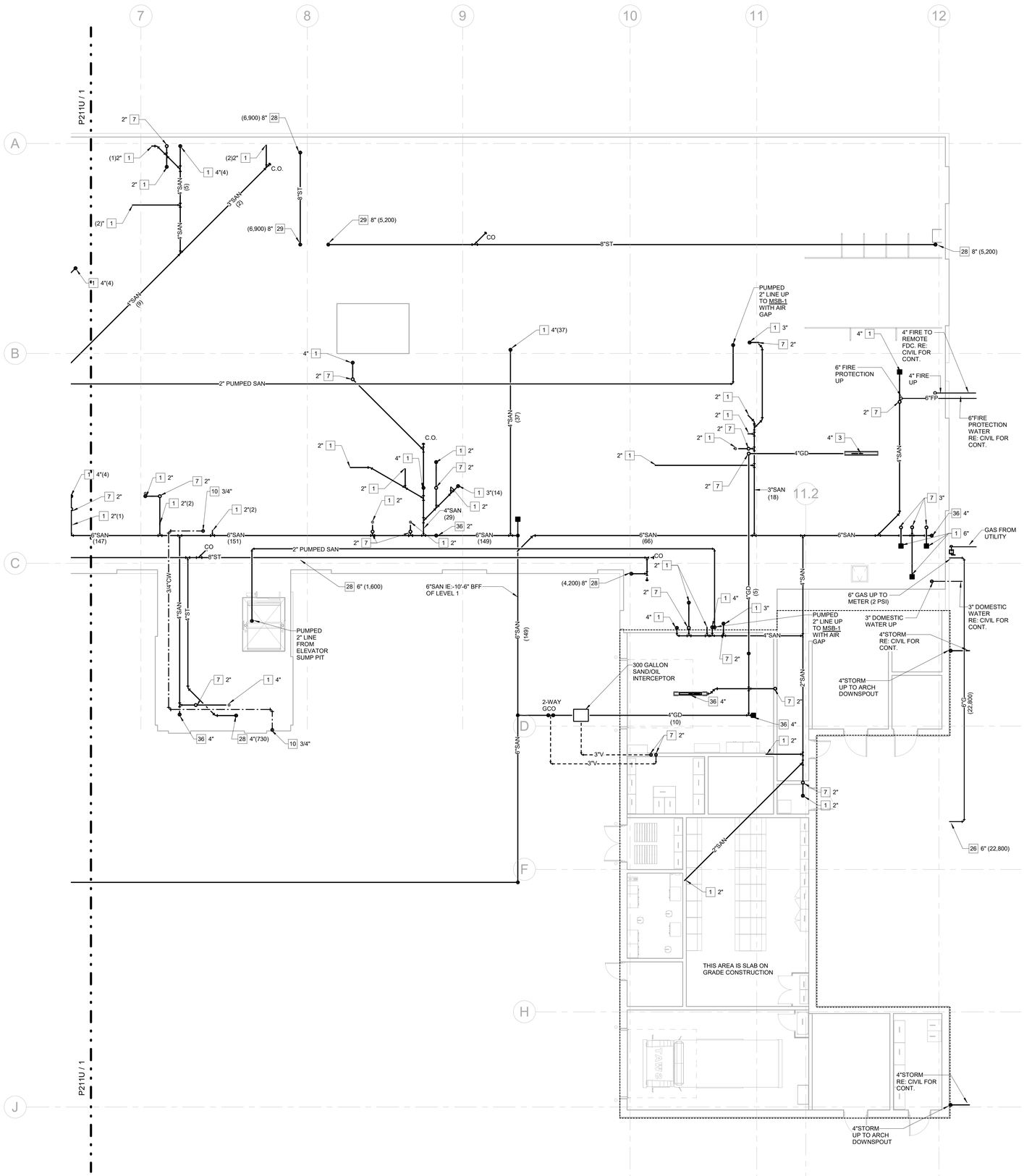

1 LEVEL 1 - CRAWLSPACE PLUMBING PLAN - EAST
1/8" = 1'-0"

GENERAL NOTES:

1. REQUIRED PIPE SIZES ARE SHOWN NEXT TO KEY NOTE.

2.PROVIDE BALL VALVE SHUTOFF AND 12"X12" ACCESS PANEL AT EACH SHOCK ABSORBER (SA). PANEL LOCATION TO BE VERIFIED AND COORDINATED WITH ARCHITECT.

3. PROVIDE 12"X12" ACCESS PANEL AT ALL TRAP PRIMER VALVES. COORDINATE WITH ARCHITECT. IF POSSIBLE, LOCATE TRAP PRIMER VALVES NEAR SHOCK ABSORBERS FOR USE WITH (1) ACCESS PANEL.

4. ALL FLOOR DRAINS ARE 2" FD-1 UNLESS NOTED OTHERWISE.

5. ALL INVERT ELEVATIONS (IE) SHALL BE FIELD VERIFIED BEFORE ANY PIPING IS INSTALLED.

6. ALL CIRCUIT SETTERS SHALL BE SET AT 1.0 GPM UNLESS NOTED OTHERWISE.

KEY NOTES:

(SOME KEY NOTES MAY NOT APPLY TO THIS SHEET)

1. SANITARY PIPING UP
2. SANITARY PIPING DN
3. SANITARY PIPING UP & DN
4. GARAGE DRAIN PIPING UP
5. GARAGE DRAIN PIPING DN
6. GARAGE DRAIN PIPING UP & DN
7. SANITARY VENT UP
8. SANITARY VENT DN
9. SANITARY VENT UP & DN
10. CW PIPING UP
11. CW PIPING DN
12. CW PIPING UP & DN
13. HW PIPING UP
14. HW PIPING DN
15. HW PIPING UP & DN
16. HWC PIPING UP
17. HWC PIPING DN
18. HWC PIPING UP & DN
19. CW & HW PIPING UP
20. CW & HW PIPING DN
21. CW & HW PIPING UP & DN
22. GAS (5 PSI) PIPING UP
23. GAS (5 PSI) PIPING DN
24. GAS (5 PSI) PIPING UP & DN
25. GAS (14" W.C.) PIPING UP
26. GAS (14" W.C.) PIPING DN
27. GAS (14" W.C.) PIPING UP & DN
28. STORM PIPING UP
29. STORM PIPING DN
30. STORM PIPING UP & DN
31. OVERFLOW PIPING UP
32. OVERFLOW PIPING DN
33. OVERFLOW PIPING UP &DN
34. OVERFLOW PIPING DOWN AND THRU WALL TO DOWNSPOUT NOZZLE +12" AFG
35. SANITARY PIPING UP TO PLUMBING FIXTURES
36. PIPING UP TO CLEANOUT
37. CW HEADER
38. HW HEADER
39. CW & HW HEADER
40. 1/2" CW & HW TO EACH LAV/SK
41. CW VALVED & CAPPED FOR FOOD SERVICE
42. HW STUBBED & CAPPED FOR FOOD SERVICE
43. VENT STUBBED & CAPPED FOR FOOD SERVICE
44. SAN STUBBED & CAPPED FOR FOOD SERVICE
45. GW STUBBED & CAPPED FOR FOOD SERVICE
46. GAS (10" WC) VALVED FOR FOOD SERVICE
47. PIPING UP TO DRAIN
48. 1/2" CW & HW DOWN TO SHOWER VALVE & 1/2" UP TO SHOWERHEAD
49. 1/2" CW FROM TRAP PRIMER. ROUTE 1/2" CW LINE(S) DOWN BELOW FLOOR TO FLOOR DRAIN PRIMER TAP.
50. 1/2" CW & HW DOWN IN WALL. BRANCH OFF 3/4" CW & HW TO EACH TUB FILLER FAUCET.
51. DOMESTIC HOT & COLD WATER FOR FUTURE EXTENSION
52. PROVIDE FLEXIBLE EXPANSION JOINT TO ACCOMMODATE 8" OF MOVEMENT. INSTALL PER MANUFACTURER RECOMMENDATIONS.
53. PROVIDE ELECTRICAL POWER FOR HARD WIRED FLUSH VALVES AND FAUCETS IN THIS ROOM.
54. PROVIDE ELECTRICAL POWER FOR HEAT TRACE IN THIS AREA.
55. PROVIDE HUB DRAIN ON SANITARY RISER IN WALL MECHANICAL CONDENSATE.

Architect: Brinkley Sargent Wigginton Architects (972) 960-9970
Landscape: Kendall Landscape Architecture (214) 739-3226
Structural: L.A. Fuess Partners, Inc (214) 593-1118
MEP: M-E Engineers (214) 741-1589
Civil: KSA Engineers, Inc (903) 236-7700
Technology: M-E Engineers (303) 421-6656

BRINKLEY SARGENT WIGINTON ARCHITECTS

LONGVIEW POLICE DEPARTMENT

518 W. SOUTH ST. LONGVIEW, TEXAS 75601

History		
#	Date	Description

STATE OF TEXAS
LAUREN F. BERRY
117369
LICENSED PROFESSIONAL ENGINEER
ME Engineers, Inc.
F-10231
08/19/2020

LEVEL 1 - CRAWLSPACE PLUMBING PLAN - EAST

20513
08/19/2020
P212U

BID ISSUE

8/17/2020 9:20:27 AM

C:\Revit Projects\20513\LPD_CENTRAL_PYB_cpn.rvt

© 2020 Brinkley Sargent Wigginton Architects, Inc.

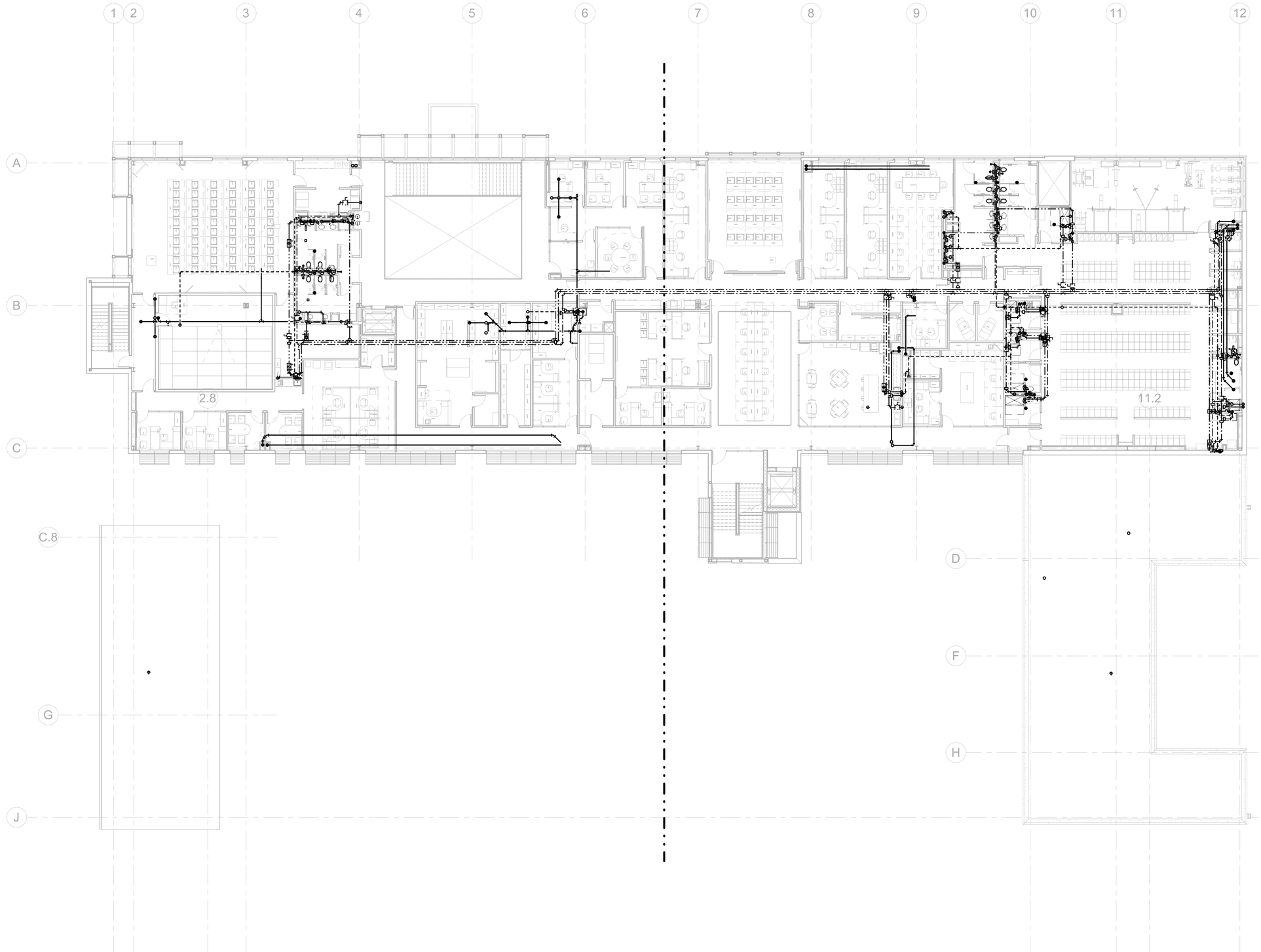

1 LEVEL 2 - PLUMBING OVERALL PLAN
3/32" = 1'-0"

GENERAL NOTES:

1. REQUIRED PIPE SIZES ARE SHOWN NEXT TO KEY NOTE.

2.PROVIDE BALL VALVE SHUTOFF AND 12"X12" ACCESS PANEL AT EACH SHOCK ABSORBER (SA). PANEL LOCATION TO BE VERIFIED AND COORDINATED WITH ARCHITECT.

3. PROVIDE 12"X12" ACCESS PANEL AT ALL TRAP PRIMER VALVES. COORDINATE WITH ARCHITECT. IF POSSIBLE, LOCATE TRAP PRIMER VALVES NEAR SHOCK ABSORBERS FOR USE WITH (1) ACCESS PANEL.

4. ALL FLOOR DRAINS ARE 2" FD-1 UNLESS NOTED OTHERWISE.

5. ALL INVERT ELEVATIONS (IE) SHALL BE FIELD VERIFIED BEFORE ANY PIPING IS INSTALLED.

6. ALL CIRCUIT SETTERS SHALL BE SET AT 1.0 GPM UNLESS NOTED OTHERWISE.

KEY NOTES:

(SOME KEY NOTES MAY NOT APPLY TO THIS SHEET)

1. SANITARY PIPING UP
2. SANITARY PIPING DN
3. SANITARY PIPING UP & DN
4. GARAGE DRAIN PIPING UP
5. GARAGE DRAIN PIPING DN
6. GARAGE DRAIN PIPING UP & DN
7. SANITARY VENT UP
8. SANITARY VENT DN
9. SANITARY VENT UP & DN
10. CW PIPING UP
11. CW PIPING DN
12. CW PIPING UP & DN
13. HW PIPING UP
14. HW PIPING DN
15. HW PIPING UP & DN
16. HWC PIPING UP
17. HWC PIPING DN
18. HWC PIPING UP & DN
19. CW & HW PIPING UP
20. CW & HW PIPING DN
21. CW & HW PIPING UP & DN
22. GAS (5 PSI) PIPING UP
23. GAS (5 PSI) PIPING DN
24. GAS (5 PSI) PIPING UP & DN
25. GAS (14" W.C.) PIPING UP
26. GAS (14" W.C.) PIPING DN
27. GAS (14" W.C.) PIPING UP & DN
28. STORM PIPING UP
29. STORM PIPING DN
30. STORM PIPING UP & DN
31. OVERFLOW PIPING UP
32. OVERFLOW PIPING DN
33. OVERFLOW PIPING UP &DN
34. OVERFLOW PIPING DOWN AND THRU WALL TO DOWNSPOUT NOZZLE +12" AFG
35. SANITARY PIPING UP TO PLUMBING FIXTURES
36. PIPING UP TO CLEANOUT
37. CW HEADER
38. HW HEADER
39. CW & HW HEADER
40. 1/2" CW & HW TO EACH LAV/SK
41. CW VALVED & CAPPED FOR FOOD SERVICE
42. HW STUBBED & CAPPED FOR FOOD SERVICE
43. VENT STUBBED & CAPPED FOR FOOD SERVICE
44. SAN STUBBED & CAPPED FOR FOOD SERVICE
45. GW STUBBED & CAPPED FOR FOOD SERVICE
46. GAS (10" WC) VALVED FOR FOOD SERVICE
47. PIPING UP TO DRAIN
48. 1/2" CW & HW DOWN TO SHOWER VALVE & 1/2" UP TO SHOWERHEAD
49. 1/2" CW FROM TRAP PRIMER. ROUTE 1/2" CW LINE(S) DOWN BELOW FLOOR TO FLOOR DRAIN PRIMER TAP.
50. 1/2" CW & HW DOWN IN WALL. BRANCH OFF 3/4" CW & HW TO EACH TUB FILLER FAUCET.
51. DOMESTIC HOT & COLD WATER FOR FUTURE EXTENSION
52. PROVIDE FLEXIBLE EXPANSION JOINT TO ACCOMMODATE 8" OF MOVEMENT. INSTALL PER MANUFACTURER RECOMMENDATIONS.
53. PROVIDE ELECTRICAL POWER FOR HARD WIRED FLUSH VALVES AND FAUCETS IN THIS ROOM.
54. PROVIDE ELECTRICAL POWER FOR HEAT TRACE IN THIS AREA
55. PROVIDE HUB DRAIN ON SANITARY RISER IN WALL MECHANICAL CONDENSATE.

Architect: Brinkley Sargent Wigginton Architects (972) 960-9970
Landscape: Kendall Landscape Architecture (214) 739-3226
Structural: L.A. Fuess Partners, Inc (214) 593-1118
MEP: M-E Engineers (214) 741-1589
Civil: KSA Engineers, Inc (903) 236-7700
Technology: M-E Engineers (303) 421-6656

BRINKLEY SARGENT WIGINTON ARCHITECTS

LONGVIEW POLICE DEPARTMENT

518 W. SOUTH ST. LONGVIEW, TEXAS 75601

History		
#	Date	Description

STATE OF TEXAS
LAUREN F. BERRY
117369
LICENSED
PROFESSIONAL ENGINEER
ME Engineers, Inc.
F-10231
08/19/2020

LEVEL 2 - PLUMBING OVERALL PLAN

20513
08/19/2020
P220

BID ISSUE

8/17/2020 9:20:33 AM

C:\Work Projects\2018\JPD_CENTRAL_P18_ce-wend.rvt

© 2020 Brinkley Sargent Wigginton Architects, Inc.

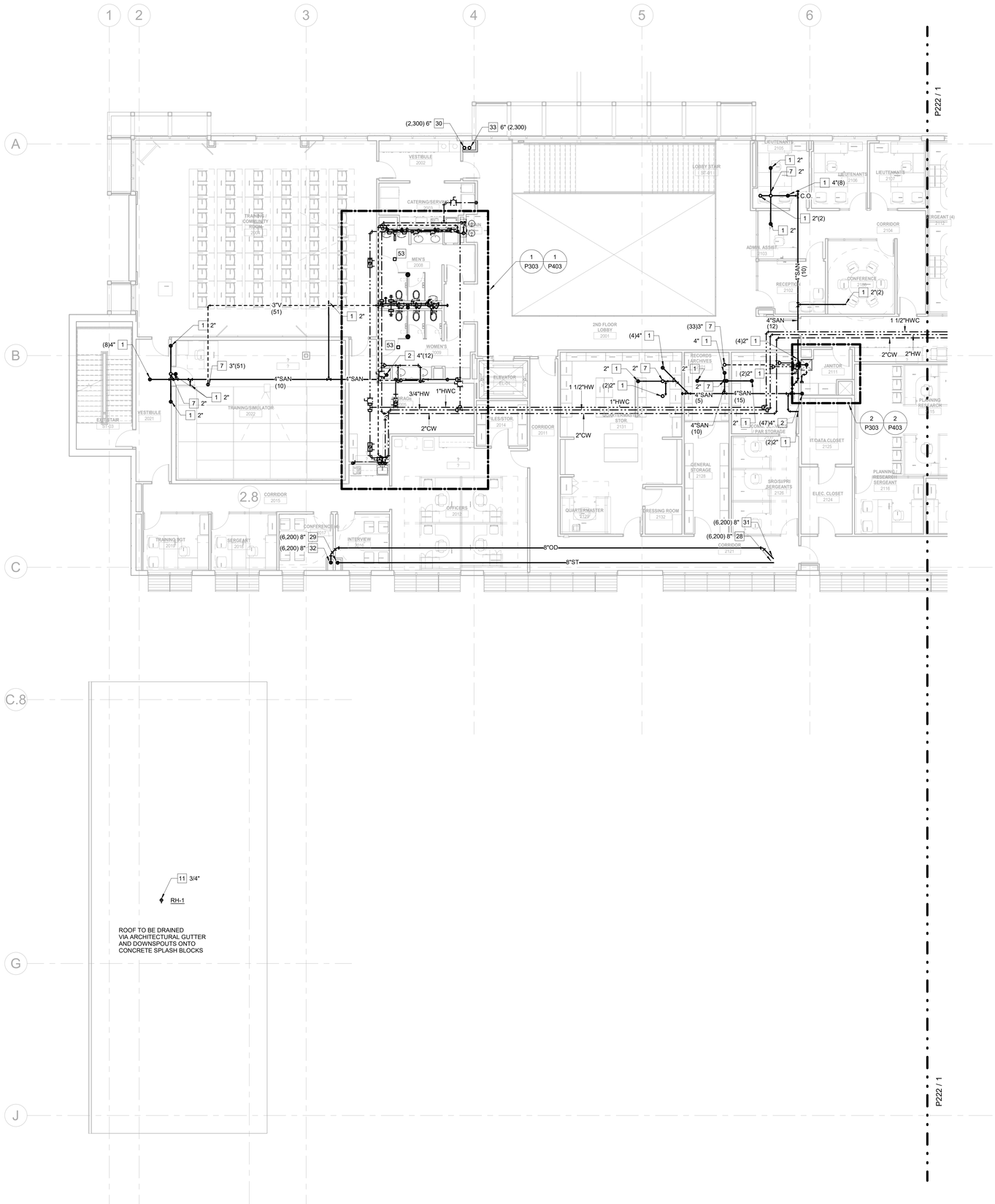

1 LEVEL 2 - PLUMBING PLAN - WEST
1/8" = 1'-0"

GENERAL NOTES:

1. REQUIRED PIPE SIZES ARE SHOWN NEXT TO KEY NOTE.

2.PROVIDE BALL VALVE SHUTOFF AND 12"X12" ACCESS PANEL AT EACH SHOCK ABSORBER (SA). PANEL LOCATION TO BE VERIFIED AND COORDINATED WITH ARCHITECT.

3. PROVIDE 12"X12" ACCESS PANEL AT ALL TRAP PRIMER VALVES. COORDINATE WITH ARCHITECT. IF POSSIBLE, LOCATE TRAP PRIMER VALVES NEAR SHOCK ABSORBERS FOR USE WITH (1) ACCESS PANEL.

4. ALL FLOOR DRAINS ARE 2" FD-1 UNLESS NOTED OTHERWISE.

5. ALL INVERT ELEVATIONS (IE) SHALL BE FIELD VERIFIED BEFORE ANY PIPING IS INSTALLED.

6. ALL CIRCUIT SETTERS SHALL BE SET AT 1.0 GPM UNLESS NOTED OTHERWISE.

KEY NOTES:

(SOME KEY NOTES MAY NOT APPLY TO THIS SHEET)

1. SANITARY PIPING UP
2. SANITARY PIPING DN
3. SANITARY PIPING UP & DN
4. GARAGE DRAIN PIPING UP
5. GARAGE DRAIN PIPING DN
6. GARAGE DRAIN PIPING UP & DN
7. SANITARY VENT UP
8. SANITARY VENT DN
9. SANITARY VENT UP & DN
10. CW PIPING UP
11. CW PIPING DN
12. CW PIPING UP & DN
13. HW PIPING UP
14. HW PIPING DN
15. HW PIPING UP & DN
16. HWC PIPING UP
17. HWC PIPING DN
18. HWC PIPING UP & DN
19. CW & HW PIPING UP
20. CW & HW PIPING DN
21. CW & HW PIPING UP & DN
22. GAS (5 PSI) PIPING UP
23. GAS (5 PSI) PIPING DN
24. GAS (5 PSI) PIPING UP & DN
25. GAS (14" W.C.) PIPING UP
26. GAS (14" W.C.) PIPING DN
27. GAS (14" W.C.) PIPING UP & DN
28. STORM PIPING UP
29. STORM PIPING DN
30. STORM PIPING UP & DN
31. OVERFLOW PIPING UP
32. OVERFLOW PIPING DN
33. OVERFLOW PIPING UP &DN
34. OVERFLOW PIPING DOWN AND THRU WALL TO DOWNSPOUT NOZZLE +12" AFG
35. SANITARY PIPING UP TO PLUMBING FIXTURES
36. PIPING UP TO CLEANOUT
37. CW HEADER
38. HW HEADER
39. CW & HW HEADER
40. 1/2" CW & HW TO EACH LAV/SK
41. CW VALVED & CAPPED FOR FOOD SERVICE
42. HW STUBBED & CAPPED FOR FOOD SERVICE
43. VENT STUBBED & CAPPED FOR FOOD SERVICE
44. SAN STUBBED & CAPPED FOR FOOD SERVICE
45. GW STUBBED & CAPPED FOR FOOD SERVICE
46. GAS (10" WC) VALVED FOR FOOD SERVICE
47. PIPING UP TO DRAIN
48. 1/2" CW & HW DOWN TO SHOWER VALVE & 1/2" UP TO SHOWERHEAD
49. 1/2" CW FROM TRAP PRIMER. ROUTE 1/2" CW LINE(S) DOWN BELOW FLOOR TO FLOOR DRAIN PRIMER TAP.
50. 1/2" CW & HW DOWN IN WALL. BRANCH OFF 3/4" CW & HW TO EACH TUB FILLER FAUCET.
51. DOMESTIC HOT & COLD WATER FOR FUTURE EXTENSION
52. PROVIDE FLEXIBLE EXPANSION JOINT TO ACCOMMODATE 8" OF MOVEMENT. INSTALL PER MANUFACTURER RECOMMENDATIONS.
53. PROVIDE ELECTRICAL POWER FOR HARD WIRED FLUSH VALVES AND FAUCETS IN THIS ROOM.
54. PROVIDE ELECTRICAL POWER FOR HEAT TRACE IN THIS AREA
55. PROVIDE HUB DRAIN ON SANITARY RISER IN WALL MECHANICAL CONDENSATE.

BRINKLEY SARGENT WIGGINTON ARCHITECTS

Architect: Brinkley Sargent Wigginton Architects (972) 960-9970
Landscape: Kendall Landscape Architecture (214) 739-3226
Structural: L.A. Fuess Partners, Inc (214) 593-1118
MEP: M-E Engineers (214) 741-1589
Civil: KSA Engineers, Inc (903) 236-7700
Technology: M-E Engineers (303) 421-6656

LONGVIEW POLICE DEPARTMENT

518 W. SOUTH ST. LONGVIEW, TEXAS 75601

History		
#	Date	Description

STATE OF TEXAS
LAUREN F. BERRY
117369
LICENSED PROFESSIONAL ENGINEER
ME Engineers, Inc.
F-10231
08/19/2020

LEVEL 2 - PLUMBING PLAN - WEST

BID ISSUE

20513
08/19/2020
P221

8/17/2020 9:20:38 AM

C:\Work Projects\2019\LPD_CENTRAL_PYB_central.rvt

© 2020 Brinkley Sargent Wigginton Architects, Inc.

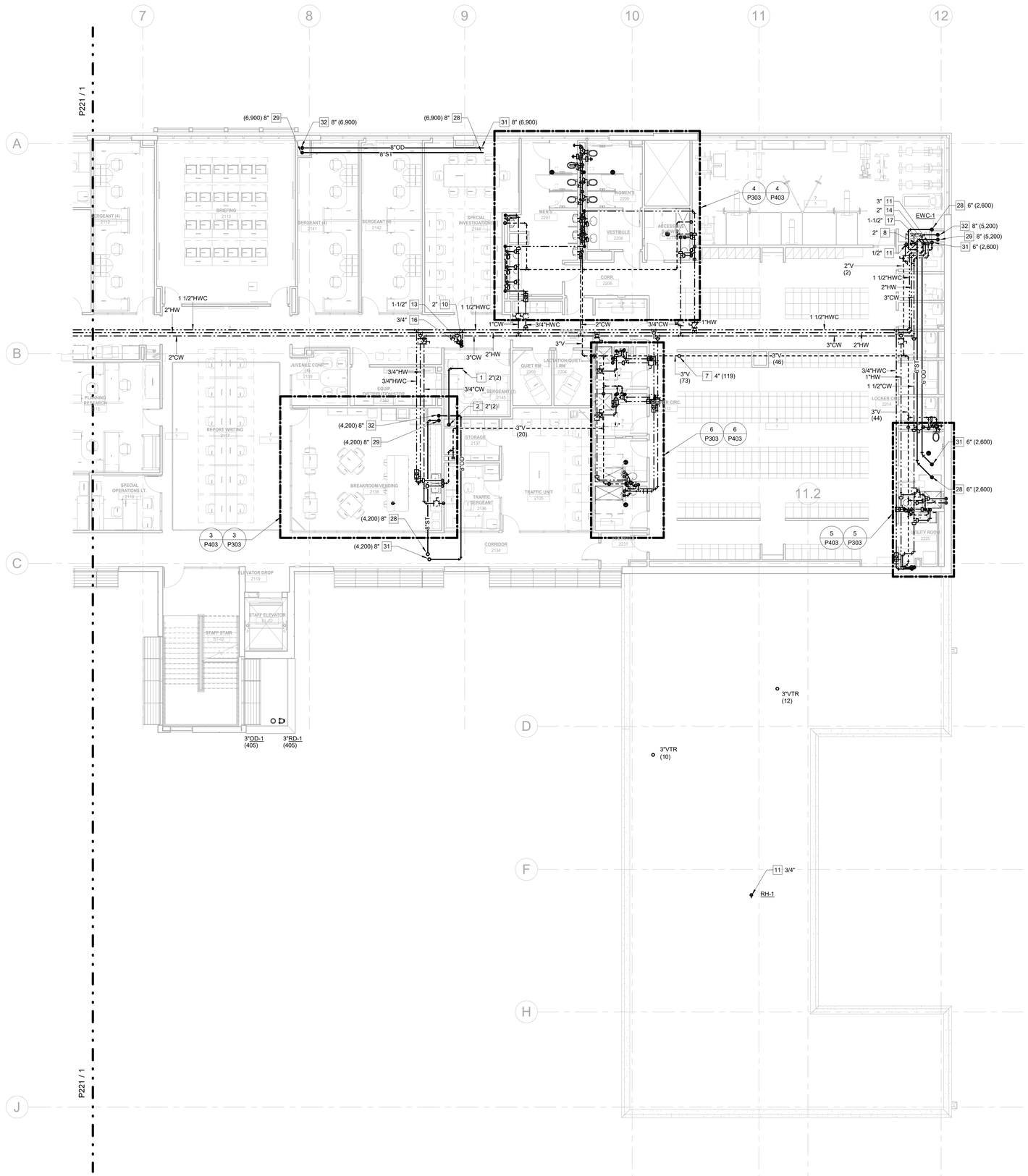

1 LEVEL 2 - PLUMBING PLAN - EAST
1/8" = 1'-0"

GENERAL NOTES:

1. REQUIRED PIPE SIZES ARE SHOWN NEXT TO KEY NOTE.

2.PROVIDE BALL VALVE SHUTOFF AND 12"X12" ACCESS PANEL AT EACH SHOCK ABSORBER (SA). PANEL LOCATION TO BE VERIFIED AND COORDINATED WITH ARCHITECT.

3. PROVIDE 12"X12" ACCESS PANEL AT ALL TRAP PRIMER VALVES. COORDINATE WITH ARCHITECT. IF POSSIBLE, LOCATE TRAP PRIMER VALVES NEAR SHOCK ABSORBERS FOR USE WITH (1) ACCESS PANEL.

4. ALL FLOOR DRAINS ARE 2" FD-1 UNLESS NOTED OTHERWISE.

5. ALL INVERT ELEVATIONS (IE) SHALL BE FIELD VERIFIED BEFORE ANY PIPING IS INSTALLED.

6. ALL CIRCUIT SETTERS SHALL BE SET AT 1.0 GPM UNLESS NOTED OTHERWISE.

KEY NOTES:

(SOME KEY NOTES MAY NOT APPLY TO THIS SHEET)

1. SANITARY PIPING UP
2. SANITARY PIPING DN
3. SANITARY PIPING UP & DN
4. GARAGE DRAIN PIPING UP
5. GARAGE DRAIN PIPING DN
6. GARAGE DRAIN PIPING UP & DN
7. SANITARY VENT UP
8. SANITARY VENT DN
9. SANITARY VENT UP & DN
10. CW PIPING UP
11. CW PIPING DN
12. CW PIPING UP & DN
13. HW PIPING UP
14. HW PIPING DN
15. HW PIPING UP & DN
16. HWC PIPING UP
17. HWC PIPING DN
18. HWC PIPING UP & DN
19. CW & HW PIPING UP
20. CW & HW PIPING DN
21. CW & HW PIPING UP & DN
22. GAS (5 PSI) PIPING UP
23. GAS (5 PSI) PIPING DN
24. GAS (5 PSI) PIPING UP & DN
25. GAS (14" W.C.) PIPING UP
26. GAS (14" W.C.) PIPING DN
27. GAS (14" W.C.) PIPING UP & DN
28. STORM PIPING UP
29. STORM PIPING DN
30. STORM PIPING UP & DN
31. OVERFLOW PIPING UP
32. OVERFLOW PIPING DN
33. OVERFLOW PIPING UP &DN
34. OVERFLOW PIPING DOWN AND THRU WALL TO DOWNSPOUT NOZZLE +12" AFG
35. SANITARY PIPING UP TO PLUMBING FIXTURES
36. PIPING UP TO CLEANOUT
37. CW HEADER
38. HW HEADER
39. CW & HW HEADER
40. 1/2" CW & HW TO EACH LAV/SK
41. CW VALVED & CAPPED FOR FOOD SERVICE
42. HW STUBBED & CAPPED FOR FOOD SERVICE
43. VENT STUBBED & CAPPED FOR FOOD SERVICE
44. SAN STUBBED & CAPPED FOR FOOD SERVICE
45. GW STUBBED & CAPPED FOR FOOD SERVICE
46. GAS (10" WC) VALVED FOR FOOD SERVICE
47. PIPING UP TO DRAIN
48. 1/2" CW & HW DOWN TO SHOWER VALVE & 1/2" UP TO SHOWERHEAD
49. 1/2" CW FROM TRAP PRIMER. ROUTE 1/2" CW LINE(S) DOWN BELOW FLOOR TO FLOOR DRAIN PRIMER TAP.
50. 1/2" CW & HW DOWN IN WALL. BRANCH OFF 3/4" CW & HW TO EACH TUB FILLER FAUCET.
51. DOMESTIC HOT & COLD WATER FOR FUTURE EXTENSION
52. PROVIDE FLEXIBLE EXPANSION JOINT TO ACCOMMODATE 8" OF MOVEMENT. INSTALL PER MANUFACTURER RECOMMENDATIONS.
53. PROVIDE ELECTRICAL POWER FOR HARD WIRED FLUSH VALVES AND FAUCETS IN THIS ROOM.
54. PROVIDE ELECTRICAL POWER FOR HEAT TRACE IN THIS AREA
55. PROVIDE HUB DRAIN ON SANITARY RISER IN WALL MECHANICAL CONDENSATE.

BRINKLEY SARGENT WIGGINTON ARCHITECTS

Architect: Brinkley Sargent Wigginton Architects (972) 960-9970
Landscape: Kendall Landscape Architecture (214) 739-3226
Structural: L.A. Fuess Partners, Inc (214) 593-1118
MEP: M-E Engineers (214) 741-1589
Civil: KSA Engineers, Inc (903) 236-7700
Technology: M-E Engineers (303) 421-6656

LONGVIEW POLICE DEPARTMENT

518 W. SOUTH ST. LONGVIEW, TEXAS 75601

History		
#	Date	Description

STATE OF TEXAS
LAUREN F. BERRY
117369
LICENSED PROFESSIONAL ENGINEER
ME Engineers, Inc.
F-10231
08/19/2020

LEVEL 2 - PLUMBING PLAN - EAST

20513
08/19/2020
P222

BID ISSUE

6/17/2020 9:20:45 AM

C:\Revit Projects\2019\UPD_CENTRAL_FY19_revit.rvt

© 2020 Brinkley Sargent Wigginton Architects, Inc.

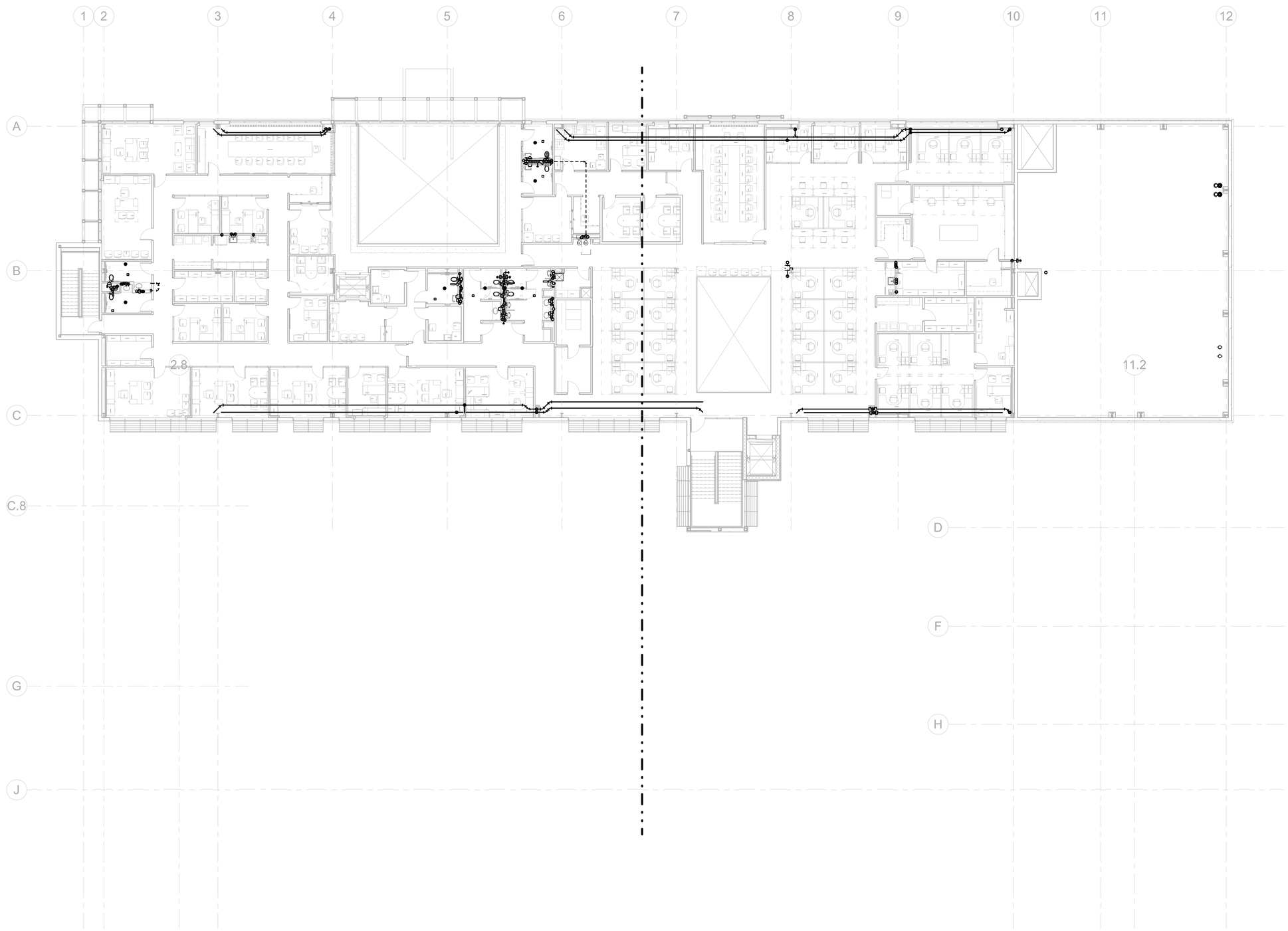

1 LEVEL 3 - PLUMBING OVERALL PLAN
3/32" = 1'-0"

GENERAL NOTES:

1. REQUIRED PIPE SIZES ARE SHOWN NEXT TO KEY NOTE.

2.PROVIDE BALL VALVE SHUTOFF AND 12"X12" ACCESS PANEL AT EACH SHOCK ABSORBER (SA). PANEL LOCATION TO BE VERIFIED AND COORDINATED WITH ARCHITECT.

3. PROVIDE 12"X12" ACCESS PANEL AT ALL TRAP PRIMER VALVES. COORDINATE WITH ARCHITECT. IF POSSIBLE, LOCATE TRAP PRIMER VALVES NEAR SHOCK ABSORBERS FOR USE WITH (1) ACCESS PANEL.

4. ALL FLOOR DRAINS ARE 2" FD-1 UNLESS NOTED OTHERWISE.

5. ALL INVERT ELEVATIONS (IE) SHALL BE FIELD VERIFIED BEFORE ANY PIPING IS INSTALLED.

6. ALL CIRCUIT SETTERS SHALL BE SET AT 1.0 GPM UNLESS NOTED OTHERWISE.

KEY NOTES:

(SOME KEY NOTES MAY NOT APPLY TO THIS SHEET)

1. SANITARY PIPING UP
2. SANITARY PIPING DN
3. SANITARY PIPING UP & DN
4. GARAGE DRAIN PIPING UP
5. GARAGE DRAIN PIPING DN
6. GARAGE DRAIN PIPING UP & DN
7. SANITARY VENT UP
8. SANITARY VENT DN
9. SANITARY VENT UP & DN
10. CW PIPING UP
11. CW PIPING DN
12. CW PIPING UP & DN
13. HW PIPING UP
14. HW PIPING DN
15. HW PIPING UP & DN
16. HWC PIPING UP
17. HWC PIPING DN
18. HWC PIPING UP & DN
19. CW & HW PIPING UP
20. CW & HW PIPING DN
21. CW & HW PIPING UP & DN
22. GAS (5 PSI) PIPING UP
23. GAS (5 PSI) PIPING DN
24. GAS (5 PSI) PIPING UP & DN
25. GAS (14" W.C.) PIPING UP
26. GAS (14" W.C.) PIPING DN
27. GAS (14" W.C.) PIPING UP & DN
28. STORM PIPING UP
29. STORM PIPING DN
30. STORM PIPING UP & DN
31. OVERFLOW PIPING UP
32. OVERFLOW PIPING DN
33. OVERFLOW PIPING UP &DN
34. OVERFLOW PIPING DOWN AND THRU WALL TO DOWNSPOUT NOZZLE +12" AFG
35. SANITARY PIPING UP TO PLUMBING FIXTURES
36. PIPING UP TO CLEANOUT
37. CW HEADER
38. HW HEADER
39. CW & HW HEADER
40. 1/2" CW & HW TO EACH LAV/SK
41. CW VALVED & CAPPED FOR FOOD SERVICE
42. HW STUBBED & CAPPED FOR FOOD SERVICE
43. VENT STUBBED & CAPPED FOR FOOD SERVICE
44. SAN STUBBED & CAPPED FOR FOOD SERVICE
45. GW STUBBED & CAPPED FOR FOOD SERVICE
46. GAS (10" WC) VALVED FOR FOOD SERVICE
47. PIPING UP TO DRAIN
48. 1/2" CW & HW DOWN TO SHOWER VALVE & 1/2" UP TO SHOWERHEAD
49. 1/2" CW FROM TRAP PRIMER. ROUTE 1/2" CW LINE(S) DOWN BELOW FLOOR TO FLOOR DRAIN PRIMER TAP.
50. 1/2" CW & HW DOWN IN WALL. BRANCH OFF 3/4" CW & HW TO EACH TUB FILLER FAUCET.
51. DOMESTIC HOT & COLD WATER FOR FUTURE EXTENSION
52. PROVIDE FLEXIBLE EXPANSION JOINT TO ACCOMMODATE 8" OF MOVEMENT. INSTALL PER MANUFACTURER RECOMMENDATIONS.
53. PROVIDE ELECTRICAL POWER FOR HARD WIRED FLUSH VALVES AND FAUCETS IN THIS ROOM.
54. PROVIDE ELECTRICAL POWER FOR HEAT TRACE IN THIS AREA
55. PROVIDE HUB DRAIN ON SANITARY RISER IN WALL MECHANICAL CONDENSATE.

Architect: Brinkley Sargent Wigginton Architects (972) 960-9970
Landscape: Kendall Landscape Architecture (214) 739-3226
Structural: L.A. Fuess Partners, Inc (214) 593-1118
MEP: M-E Engineers (214) 741-1589
Civil: KSA Engineers, Inc (903) 236-7700
Technology: M-E Engineers (303) 421-6656

BRINKLEY SARGENT WIGINTON ARCHITECTS

LONGVIEW POLICE DEPARTMENT

518 W. SOUTH ST. LONGVIEW, TEXAS 75601

History		
#	Date	Description

STATE OF TEXAS
LAUREN F. BERRY
117369
LICENSED
PROFESSIONAL ENGINEER
ME Engineers, Inc.
F-10231
08/19/2020

LEVEL 3 - PLUMBING OVERALL PLAN

20513
08/19/2020
P230

BID ISSUE

8/17/2020 9:29:49 AM

C:\Revit Projects\2019\LPD_CENTRAL_P1b_sm-wendi.rvt

© 2020 Brinkley Sargent Wigginton Architects, Inc.

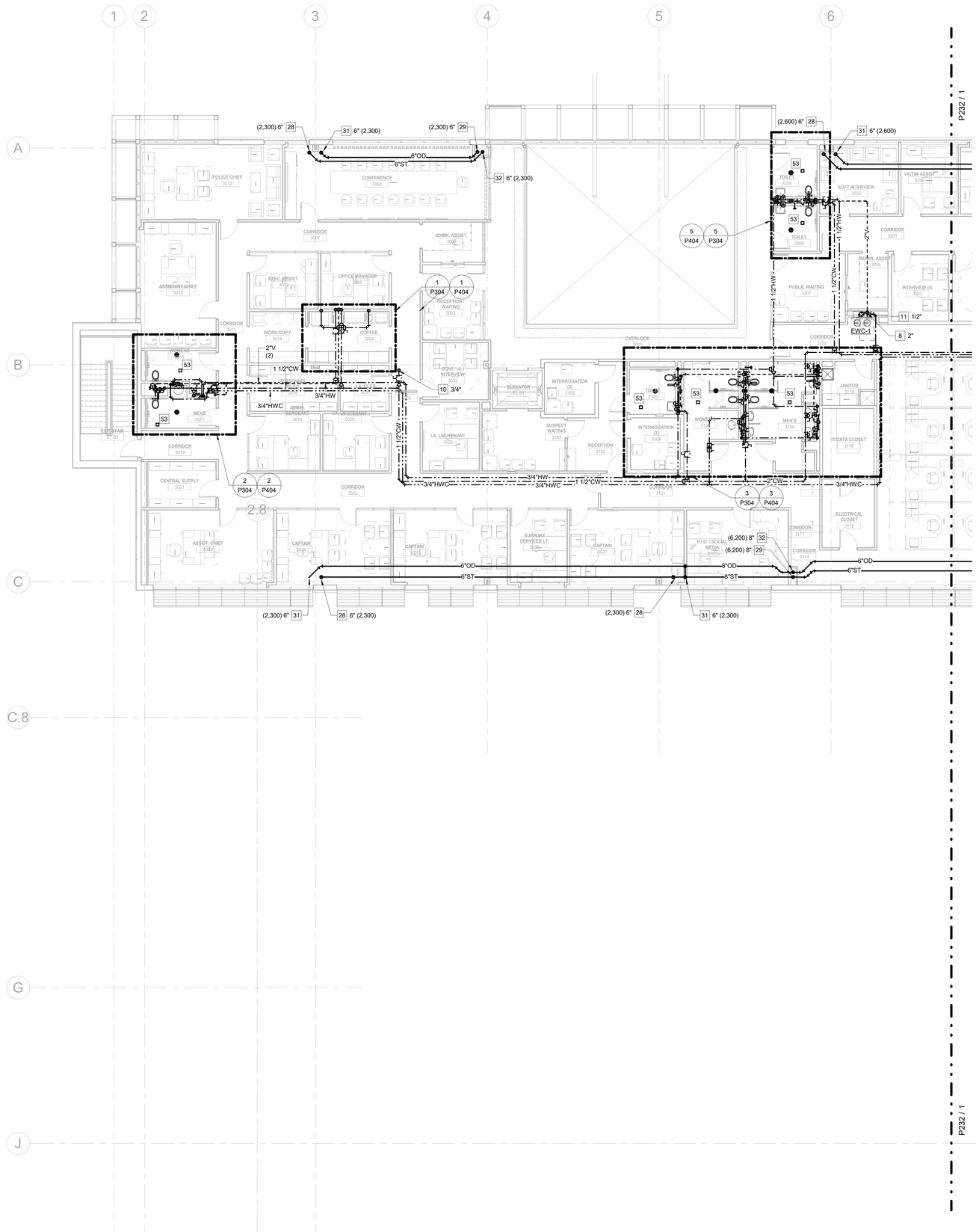

1 LEVEL 3 - PLUMBING PLAN - WEST
1/8" = 1'-0"

GENERAL NOTES:

1. REQUIRED PIPE SIZES ARE SHOWN NEXT TO KEY NOTE.

2.PROVIDE BALL VALVE SHUTOFF AND 12"X12" ACCESS PANEL AT EACH SHOCK ABSORBER (SA). PANEL LOCATION TO BE VERIFIED AND COORDINATED WITH ARCHITECT.

3. PROVIDE 12"X12" ACCESS PANEL AT ALL TRAP PRIMER VALVES. COORDINATE WITH ARCHITECT. IF POSSIBLE, LOCATE TRAP PRIMER VALVES NEAR SHOCK ABSORBERS FOR USE WITH (1) ACCESS PANEL.

4. ALL FLOOR DRAINS ARE 2" FD-1 UNLESS NOTED OTHERWISE.

5. ALL INVERT ELEVATIONS (IE) SHALL BE FIELD VERIFIED BEFORE ANY PIPING IS INSTALLED.

6. ALL CIRCUIT SETTERS SHALL BE SET AT 1.0 GPM UNLESS NOTED OTHERWISE.

KEY NOTES:

(SOME KEY NOTES MAY NOT APPLY TO THIS SHEET)

1. SANITARY PIPING UP
2. SANITARY PIPING DN
3. SANITARY PIPING UP & DN
4. GARAGE DRAIN PIPING UP
5. GARAGE DRAIN PIPING DN
6. GARAGE DRAIN PIPING UP & DN
7. SANITARY VENT UP
8. SANITARY VENT DN
9. SANITARY VENT UP & DN
10. CW PIPING UP
11. CW PIPING DN
12. CW PIPING UP & DN
13. HW PIPING UP
14. HW PIPING DN
15. HW PIPING UP & DN
16. HWC PIPING UP
17. HWC PIPING DN
18. HWC PIPING UP & DN
19. CW & HW PIPING UP
20. CW & HW PIPING DN
21. CW & HW PIPING UP & DN
22. GAS (5 PSI) PIPING UP
23. GAS (5 PSI) PIPING DN
24. GAS (5 PSI) PIPING UP & DN
25. GAS (14" W.C.) PIPING UP
26. GAS (14" W.C.) PIPING DN
27. GAS (14" W.C.) PIPING UP & DN
28. STORM PIPING UP
29. STORM PIPING DN
30. STORM PIPING UP & DN
31. OVERFLOW PIPING UP
32. OVERFLOW PIPING DN
33. OVERFLOW PIPING UP &DN
34. OVERFLOW PIPING DOWN AND THRU WALL TO DOWNSPOUT NOZZLE +12" AFG
35. SANITARY PIPING UP TO PLUMBING FIXTURES
36. PIPING UP TO CLEANOUT
37. CW HEADER
38. HW HEADER
39. CW & HW HEADER
40. 1/2" CW & HW TO EACH LAV/SK
41. CW VALVED & CAPPED FOR FOOD SERVICE
42. HW STUBBED & CAPPED FOR FOOD SERVICE
43. VENT STUBBED & CAPPED FOR FOOD SERVICE
44. SAN STUBBED & CAPPED FOR FOOD SERVICE
45. GW STUBBED & CAPPED FOR FOOD SERVICE
46. GAS (10" WC) VALVED FOR FOOD SERVICE
47. PIPING UP TO DRAIN
48. 1/2" CW & HW DOWN TO SHOWER VALVE & 1/2" UP TO SHOWERHEAD
49. 1/2" CW FROM TRAP PRIMER. ROUTE 1/2" CW LINE(S) DOWN BELOW FLOOR TO FLOOR DRAIN PRIMER TAP.
50. 1/2" CW & HW DOWN IN WALL. BRANCH OFF 3/4" CW & HW TO EACH TUB FILLER FAUCET.
51. DOMESTIC HOT & COLD WATER FOR FUTURE EXTENSION
52. PROVIDE FLEXIBLE EXPANSION JOINT TO ACCOMMODATE 8" OF MOVEMENT. INSTALL PER MANUFACTURER RECOMMENDATIONS.
53. PROVIDE ELECTRICAL POWER FOR HARD WIRED FLUSH VALVES AND FAUCETS IN THIS ROOM.
54. PROVIDE ELECTRICAL POWER FOR HEAT TRACE IN THIS AREA
55. PROVIDE HUB DRAIN ON SANITARY RISER IN WALL MECHANICAL CONDENSATE.

BRINKLEY SARGENT WIGINTON ARCHITECTS

Architect: Brinkley Sargent Wigginton Architects (972) 960-9970
Landscape: Kendall Landscape Architecture (214) 739-3226
Structural: L.A. Fuess Partners, Inc (214) 593-1118
MEP: M-E Engineers (214) 741-1589
Civil: KSA Engineers, Inc (903) 236-7700
Technology: M-E Engineers (303) 421-6656

LONGVIEW POLICE DEPARTMENT

518 W. SOUTH ST. LONGVIEW, TEXAS 75601

History		
#	Date	Description

STATE OF TEXAS
LAUREN F. BERRY
117369
LICENSED
PROFESSIONAL ENGINEER
ME Engineers, Inc.
F-10231
08/19/2020

LEVEL 3 - PLUMBING PLAN - WEST

BID ISSUE

20513
08/19/2020

P231

6/17/2020 9:20:25 AM

C:\Revit Projects\2019\JRL_CENTRAL_FY19_revit-mep.rvt

© 2020 Brinkley Sargent Wigginton Architects, Inc.

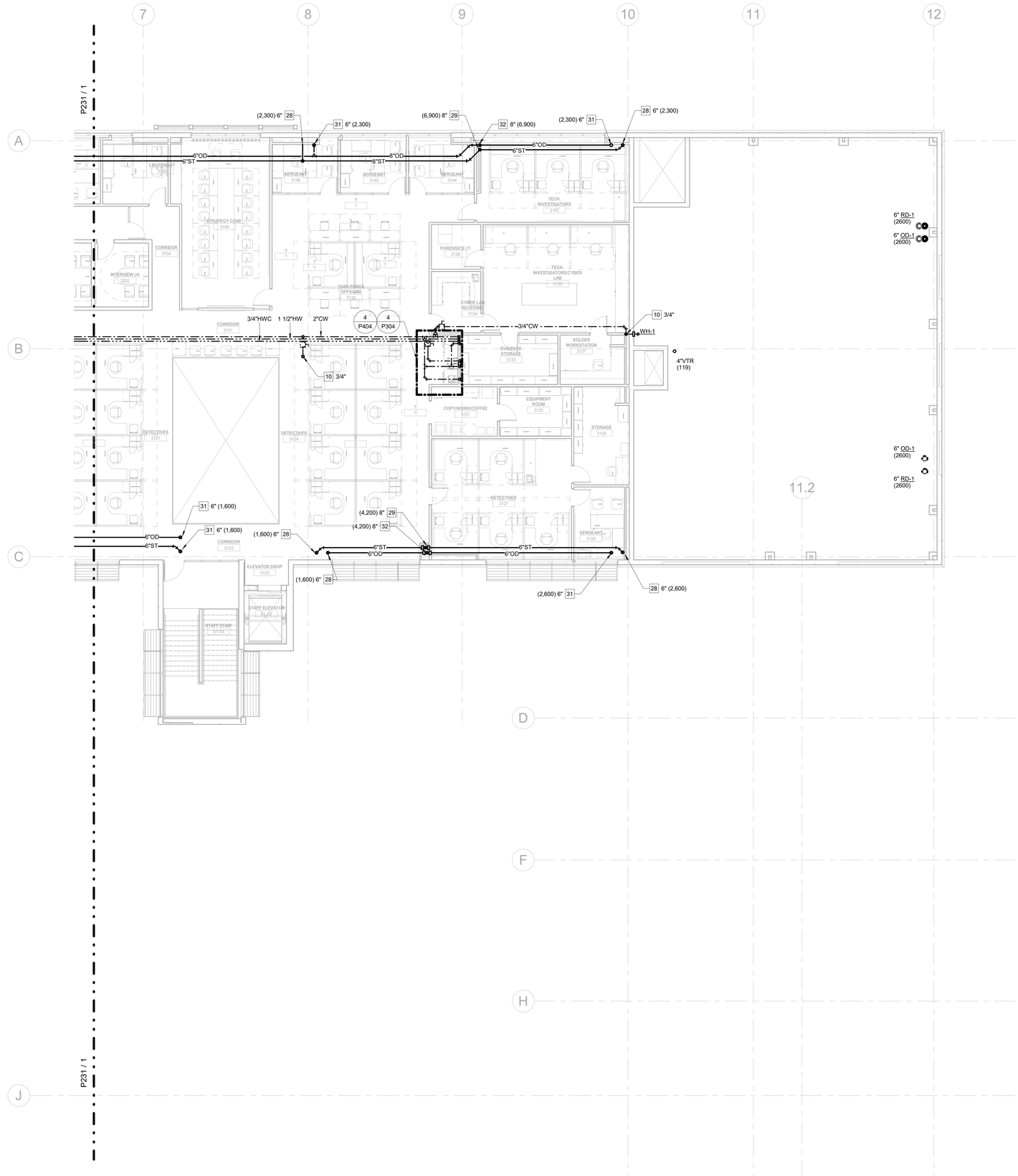

1 LEVEL 3 - PLUMBING PLAN - EAST
1/8" = 1'-0"

GENERAL NOTES:

1. REQUIRED PIPE SIZES ARE SHOWN NEXT TO KEY NOTE.

2.PROVIDE BALL VALVE SHUTOFF AND 12"X12" ACCESS PANEL AT EACH SHOCK ABSORBER (SA). PANEL LOCATION TO BE VERIFIED AND COORDINATED WITH ARCHITECT.

3. PROVIDE 12"X12" ACCESS PANEL AT ALL TRAP PRIMER VALVES. COORDINATE WITH ARCHITECT. IF POSSIBLE, LOCATE TRAP PRIMER VALVES NEAR SHOCK ABSORBERS FOR USE WITH (1) ACCESS PANEL.

4. ALL FLOOR DRAINS ARE 2" FD-1 UNLESS NOTED OTHERWISE.

5. ALL INVERT ELEVATIONS (IE) SHALL BE FIELD VERIFIED BEFORE ANY PIPING IS INSTALLED.

6. ALL CIRCUIT SETTERS SHALL BE SET AT 1.0 GPM UNLESS NOTED OTHERWISE.

KEY NOTES:

(SOME KEY NOTES MAY NOT APPLY TO THIS SHEET)

1. SANITARY PIPING UP
2. SANITARY PIPING DN
3. SANITARY PIPING UP & DN
4. GARAGE DRAIN PIPING UP
5. GARAGE DRAIN PIPING DN
6. GARAGE DRAIN PIPING UP & DN
7. SANITARY VENT UP
8. SANITARY VENT DN
9. SANITARY VENT UP & DN
10. CW PIPING UP
11. CW PIPING DN
12. CW PIPING UP & DN
13. HW PIPING UP
14. HW PIPING DN
15. HW PIPING UP & DN
16. HWC PIPING UP
17. HWC PIPING DN
18. HWC PIPING UP & DN
19. CW & HW PIPING UP
20. CW & HW PIPING DN
21. CW & HW PIPING UP & DN
22. GAS (5 PSI) PIPING UP
23. GAS (5 PSI) PIPING DN
24. GAS (5 PSI) PIPING UP & DN
25. GAS (14" W.C.) PIPING UP
26. GAS (14" W.C.) PIPING DN
27. GAS (14" W.C.) PIPING UP & DN
28. STORM PIPING UP
29. STORM PIPING DN
30. STORM PIPING UP & DN
31. OVERFLOW PIPING UP
32. OVERFLOW PIPING DN
33. OVERFLOW PIPING UP &DN
34. OVERFLOW PIPING DOWN AND THRU WALL TO DOWNSPOUT NOZZLE +12" AFG
35. SANITARY PIPING UP TO PLUMBING FIXTURES
36. PIPING UP TO CLEANOUT
37. CW HEADER
38. HW HEADER
39. CW & HW HEADER
40. 1/2" CW & HW TO EACH LAV/SK
41. CW VALVED & CAPPED FOR FOOD SERVICE
42. HW STUBBED & CAPPED FOR FOOD SERVICE
43. VENT STUBBED & CAPPED FOR FOOD SERVICE
44. SAN STUBBED & CAPPED FOR FOOD SERVICE
45. GW STUBBED & CAPPED FOR FOOD SERVICE
46. GAS (10" WC) VALVED FOR FOOD SERVICE
47. PIPING UP TO DRAIN
48. 1/2" CW & HW DOWN TO SHOWER VALVE & 1/2" UP TO SHOWERHEAD
49. 1/2" CW FROM TRAP PRIMER. ROUTE 1/2" CW LINE(S) DOWN BELOW FLOOR TO FLOOR DRAIN PRIMER TAP.
50. 1/2" CW & HW DOWN IN WALL. BRANCH OFF 3/4" CW & HW TO EACH TUB FILLER FAUCET.
51. DOMESTIC HOT & COLD WATER FOR FUTURE EXTENSION
52. PROVIDE FLEXIBLE EXPANSION JOINT TO ACCOMMODATE 8" OF MOVEMENT. INSTALL PER MANUFACTURER RECOMMENDATIONS.
53. PROVIDE ELECTRICAL POWER FOR HARD WIRED FLUSH VALVES AND FAUCETS IN THIS ROOM.
54. PROVIDE ELECTRICAL POWER FOR HEAT TRACE IN THIS AREA
55. PROVIDE HUB DRAIN ON SANITARY RISER IN WALL MECHANICAL CONDENSATE.

BRINKLEY SARGENT WIGINTON ARCHITECTS

Architect: Brinkley Sargent Wigginton Architects (972) 960-9970
Landscape: Kendall Landscape Architecture (214) 739-3226
Structural: L.A. Fuess Partners, Inc (214) 593-1118
MEP: M-E Engineers (214) 741-1589
Civil: KSA Engineers, Inc (903) 236-7700
Technology: M-E Engineers (303) 421-6656

LONGVIEW POLICE DEPARTMENT

518 W. SOUTH ST. LONGVIEW, TEXAS 75601

History		
#	Date	Description

LICENSED PROFESSIONAL ENGINEER
LAUREN F. BERRY
117369
STATE OF TEXAS
ME Engineers, Inc.
F-10231
08/19/2020

LEVEL 3 - PLUMBING PLAN - EAST

BID ISSUE

20513
08/19/2020
P232

6/17/2020 9:20:59 AM

C:\Revit Projects\2019\LPD_CENTRAL_R19_ccm wendi.rvt

© 2020 Brinkley Sargent Wigginton Architects, Inc.

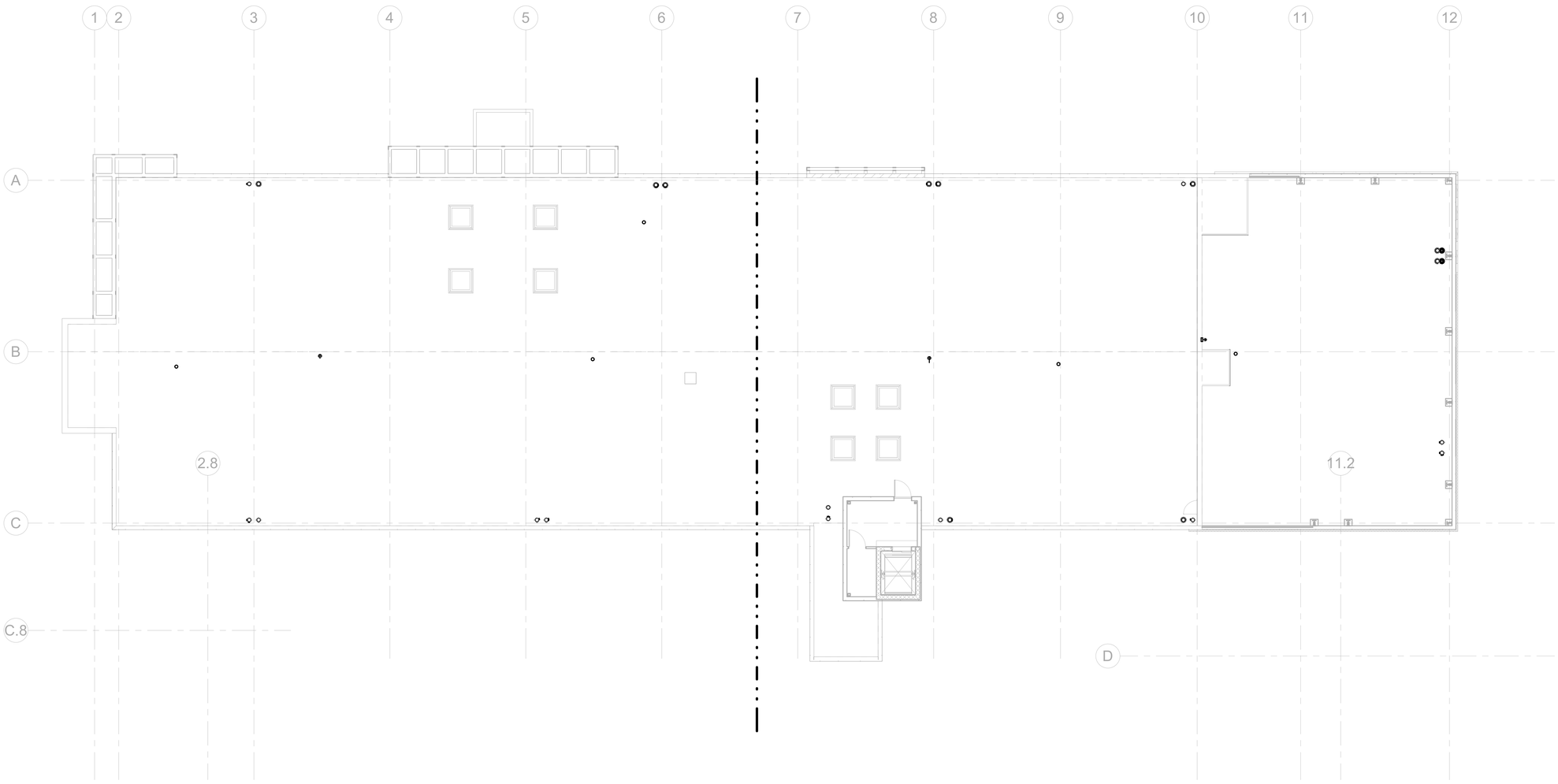

1 ROOF - PLUMBING OVERALL PLAN
3/32" = 1'-0"

GENERAL NOTES:

1. REQUIRED PIPE SIZES ARE SHOWN NEXT TO KEY NOTE.

2.PROVIDE BALL VALVE SHUTOFF AND 12"X12" ACCESS PANEL AT EACH SHOCK ABSORBER (SA). PANEL LOCATION TO BE VERIFIED AND COORDINATED WITH ARCHITECT.

3. PROVIDE 12"X12" ACCESS PANEL AT ALL TRAP PRIMER VALVES. COORDINATE WITH ARCHITECT. IF POSSIBLE, LOCATE TRAP PRIMER VALVES NEAR SHOCK ABSORBERS FOR USE WITH (1) ACCESS PANEL.

4. ALL FLOOR DRAINS ARE 2" FD-1 UNLESS NOTED OTHERWISE.

5. ALL INVERT ELEVATIONS (IE) SHALL BE FIELD VERIFIED BEFORE ANY PIPING IS INSTALLED.

6. ALL CIRCUIT SETTERS SHALL BE SET AT 1.0 GPM UNLESS NOTED OTHERWISE.

KEY NOTES:

(SOME KEY NOTES MAY NOT APPLY TO THIS SHEET)

1. SANITARY PIPING UP
2. SANITARY PIPING DN
3. SANITARY PIPING UP & DN
4. GARAGE DRAIN PIPING UP
5. GARAGE DRAIN PIPING DN
6. GARAGE DRAIN PIPING UP & DN
7. SANITARY VENT UP
8. SANITARY VENT DN
9. SANITARY VENT UP & DN
10. CW PIPING UP
11. CW PIPING DN
12. CW PIPING UP & DN
13. HW PIPING UP
14. HW PIPING DN
15. HW PIPING UP & DN
16. HWC PIPING UP
17. HWC PIPING DN
18. HWC PIPING UP & DN
19. CW & HW PIPING UP
20. CW & HW PIPING DN
21. CW & HW PIPING UP & DN
22. GAS (5 PSI) PIPING UP
23. GAS (5 PSI) PIPING DN
24. GAS (5 PSI) PIPING UP & DN
25. GAS (14" W.C.) PIPING UP
26. GAS (14" W.C.) PIPING DN
27. GAS (14" W.C.) PIPING UP & DN
28. STORM PIPING UP
29. STORM PIPING DN
30. STORM PIPING UP & DN
31. OVERFLOW PIPING UP
32. OVERFLOW PIPING DN
33. OVERFLOW PIPING UP &DN
34. OVERFLOW PIPING DOWN AND THRU WALL TO DOWNSPOUT NOZZLE +12" AFG
35. SANITARY PIPING UP TO PLUMBING FIXTURES
36. PIPING UP TO CLEANOUT
37. CW HEADER
38. HW HEADER
39. CW & HW HEADER
40. 1/2" CW & HW TO EACH LAV/SK
41. CW VALVED & CAPPED FOR FOOD SERVICE
42. HW STUBBED & CAPPED FOR FOOD SERVICE
43. VENT STUBBED & CAPPED FOR FOOD SERVICE
44. SAN STUBBED & CAPPED FOR FOOD SERVICE
45. GW STUBBED & CAPPED FOR FOOD SERVICE
46. GAS (10" WC) VALVED FOR FOOD SERVICE
47. PIPING UP TO DRAIN
48. 1/2" CW & HW DOWN TO SHOWER VALVE & 1/2" UP TO SHOWERHEAD
49. 1/2" CW FROM TRAP PRIMER. ROUTE 1/2" CW LINE(S) DOWN BELOW FLOOR TO FLOOR DRAIN PRIMER TAP.
50. 1/2" CW & HW DOWN IN WALL. BRANCH OFF 3/4" CW & HW TO EACH TUB FILLER FAUCET.
51. DOMESTIC HOT & COLD WATER FOR FUTURE EXTENSION
52. PROVIDE FLEXIBLE EXPANSION JOINT TO ACCOMMODATE 8" OF MOVEMENT. INSTALL PER MANUFACTURER RECOMMENDATIONS.
53. PROVIDE ELECTRICAL POWER FOR HARD WIRED FLUSH VALVES AND FAUCETS IN THIS ROOM.
54. PROVIDE ELECTRICAL POWER FOR HEAT TRACE IN THIS AREA
55. PROVIDE HUB DRAIN ON SANITARY RISER IN WALL MECHANICAL CONDENSATE.

Architect: Brinkley Sargent Wigginton Architects (972) 960-9970
Landscape: Kendall Landscape Architecture (214) 739-3226
Structural: L.A. Fuess Partners, Inc (214) 593-1118
MEP: M-E Engineers (214) 741-1589
Civil: KSA Engineers, Inc (903) 236-7700
Technology: M-E Engineers (303) 421-6656

BRINKLEY SARGENT WIGINTON ARCHITECTS

LONGVIEW POLICE DEPARTMENT

518 W. SOUTH ST. LONGVIEW, TEXAS 75601

History		
#	Date	Description

LICENSED PROFESSIONAL ENGINEER
LAUREN F. BERRY
117369
STATE OF TEXAS

ME Engineers, Inc.
F-10231
08/19/2020

ROOF - PLUMBING OVERALL PLAN

20513
08/19/2020

P240

BID ISSUE

8/17/2020 9:21:01 AM

C:\Revit Projects\2019\LPD_CENTRAL_FTB_rcn-ME.rvt

© 2020 Brinkley Sargent Wigginton Architects, Inc.

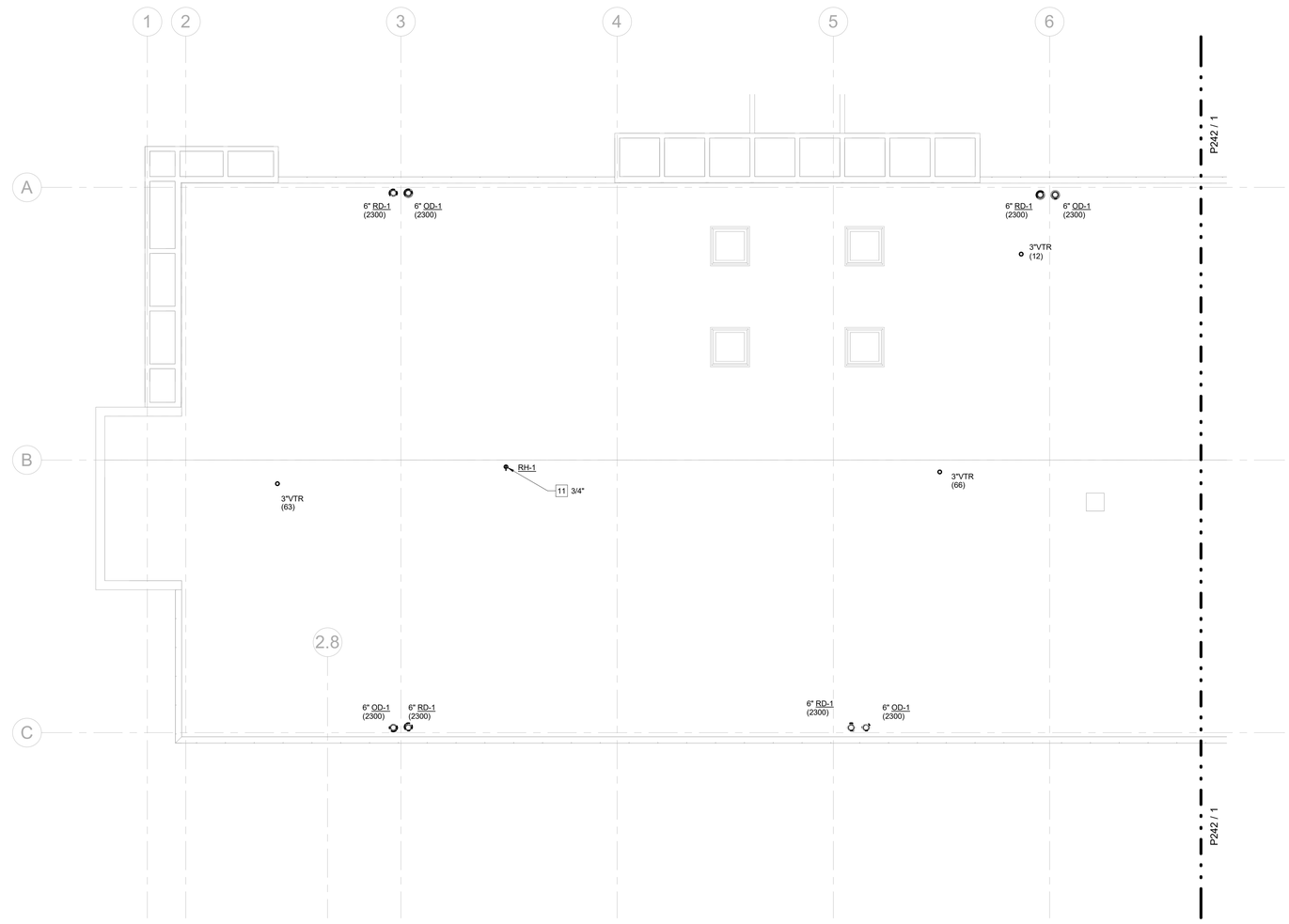

1 ROOF - PLUMBING PLAN - WEST
1/8" = 1'-0"

GENERAL NOTES:

1. REQUIRED PIPE SIZES ARE SHOWN NEXT TO KEY NOTE.

2.PROVIDE BALL VALVE SHUTOFF AND 12"X12" ACCESS PANEL AT EACH SHOCK ABSORBER (SA). PANEL LOCATION TO BE VERIFIED AND COORDINATED WITH ARCHITECT.

3. PROVIDE 12"X12" ACCESS PANEL AT ALL TRAP PRIMER VALVES. COORDINATE WITH ARCHITECT. IF POSSIBLE, LOCATE TRAP PRIMER VALVES NEAR SHOCK ABSORBERS FOR USE WITH (1) ACCESS PANEL.

4. ALL FLOOR DRAINS ARE 2" FD-1 UNLESS NOTED OTHERWISE.

5. ALL INVERT ELEVATIONS (IE) SHALL BE FIELD VERIFIED BEFORE ANY PIPING IS INSTALLED.

6. ALL CIRCUIT SETTERS SHALL BE SET AT 1.0 GPM UNLESS NOTED OTHERWISE.

KEY NOTES:

(SOME KEY NOTES MAY NOT APPLY TO THIS SHEET)

1. SANITARY PIPING UP
2. SANITARY PIPING DN
3. SANITARY PIPING UP & DN
4. GARAGE DRAIN PIPING UP
5. GARAGE DRAIN PIPING DN
6. GARAGE DRAIN PIPING UP & DN
7. SANITARY VENT UP
8. SANITARY VENT DN
9. SANITARY VENT UP & DN
10. CW PIPING UP
11. CW PIPING DN
12. CW PIPING UP & DN
13. HW PIPING UP
14. HW PIPING DN
15. HW PIPING UP & DN
16. HWC PIPING UP
17. HWC PIPING DN
18. HWC PIPING UP & DN
19. CW & HW PIPING UP
20. CW & HW PIPING DN
21. CW & HW PIPING UP & DN
22. GAS (5 PSI) PIPING UP
23. GAS (5 PSI) PIPING DN
24. GAS (5 PSI) PIPING UP & DN
25. GAS (14" W.C.) PIPING UP
26. GAS (14" W.C.) PIPING DN
27. GAS (14" W.C.) PIPING UP & DN
28. STORM PIPING UP
29. STORM PIPING DN
30. STORM PIPING UP & DN
31. OVERFLOW PIPING UP
32. OVERFLOW PIPING DN
33. OVERFLOW PIPING UP &DN
34. OVERFLOW PIPING DOWN AND THRU WALL TO DOWNSPOUT NOZZLE +12" AFG
35. SANITARY PIPING UP TO PLUMBING FIXTURES
36. PIPING UP TO CLEANOUT
37. CW HEADER
38. HW HEADER
39. CW & HW HEADER
40. 1/2" CW & HW TO EACH LAV/SK
41. CW VALVED & CAPPED FOR FOOD SERVICE
42. HW STUBBED & CAPPED FOR FOOD SERVICE
43. VENT STUBBED & CAPPED FOR FOOD SERVICE
44. SAN STUBBED & CAPPED FOR FOOD SERVICE
45. GW STUBBED & CAPPED FOR FOOD SERVICE
46. GAS (10" WC) VALVED FOR FOOD SERVICE
47. PIPING UP TO DRAIN
48. 1/2" CW & HW DOWN TO SHOWER VALVE & 1/2" UP TO SHOWERHEAD
49. 1/2" CW FROM TRAP PRIMER. ROUTE 1/2" CW LINE(S) DOWN BELOW FLOOR TO FLOOR DRAIN PRIMER TAP.
50. 1/2" CW & HW DOWN IN WALL. BRANCH OFF 3/4" CW & HW TO EACH TUB FILLER FAUCET.
51. DOMESTIC HOT & COLD WATER FOR FUTURE EXTENSION
52. PROVIDE FLEXIBLE EXPANSION JOINT TO ACCOMMODATE 8" OF MOVEMENT. INSTALL PER MANUFACTURER RECOMMENDATIONS.
53. PROVIDE ELECTRICAL POWER FOR HARD WIRED FLUSH VALVES AND FAUCETS IN THIS ROOM.
54. PROVIDE ELECTRICAL POWER FOR HEAT TRACE IN THIS AREA
55. PROVIDE HUB DRAIN ON SANITARY RISER IN WALL MECHANICAL CONDENSATE.

BRINKLEY SARGENT WIGINTON ARCHITECTS

Architect: Brinkley Sargent Wigginton Architects (972) 960-9970
Landscape: Kendall Landscape Architecture (214) 739-3226
Structural: L.A. Fuess Partners, Inc (214) 593-1118
MEP: M-E Engineers (214) 741-1589
Civil: KSA Engineers, Inc (903) 236-7700
Technology: M-E Engineers (303) 421-6656

LONGVIEW POLICE DEPARTMENT

518 W. SOUTH ST. LONGVIEW, TEXAS 75601

History		
#	Date	Description

STATE OF TEXAS
LAUREN F. BERRY
117369
LICENSED PROFESSIONAL ENGINEER
ME Engineers, Inc.
F-10231
08/19/2020

ROOF - PLUMBING PLAN - WEST

BID ISSUE

20513
08/19/2020
P241

8/17/2020 9:21:02 AM

C:\Work Projects\2019\LPD_CENTRAL_PYB_central.rvt

© 2020 Brinkley Sargent Wigginton Architects, Inc.

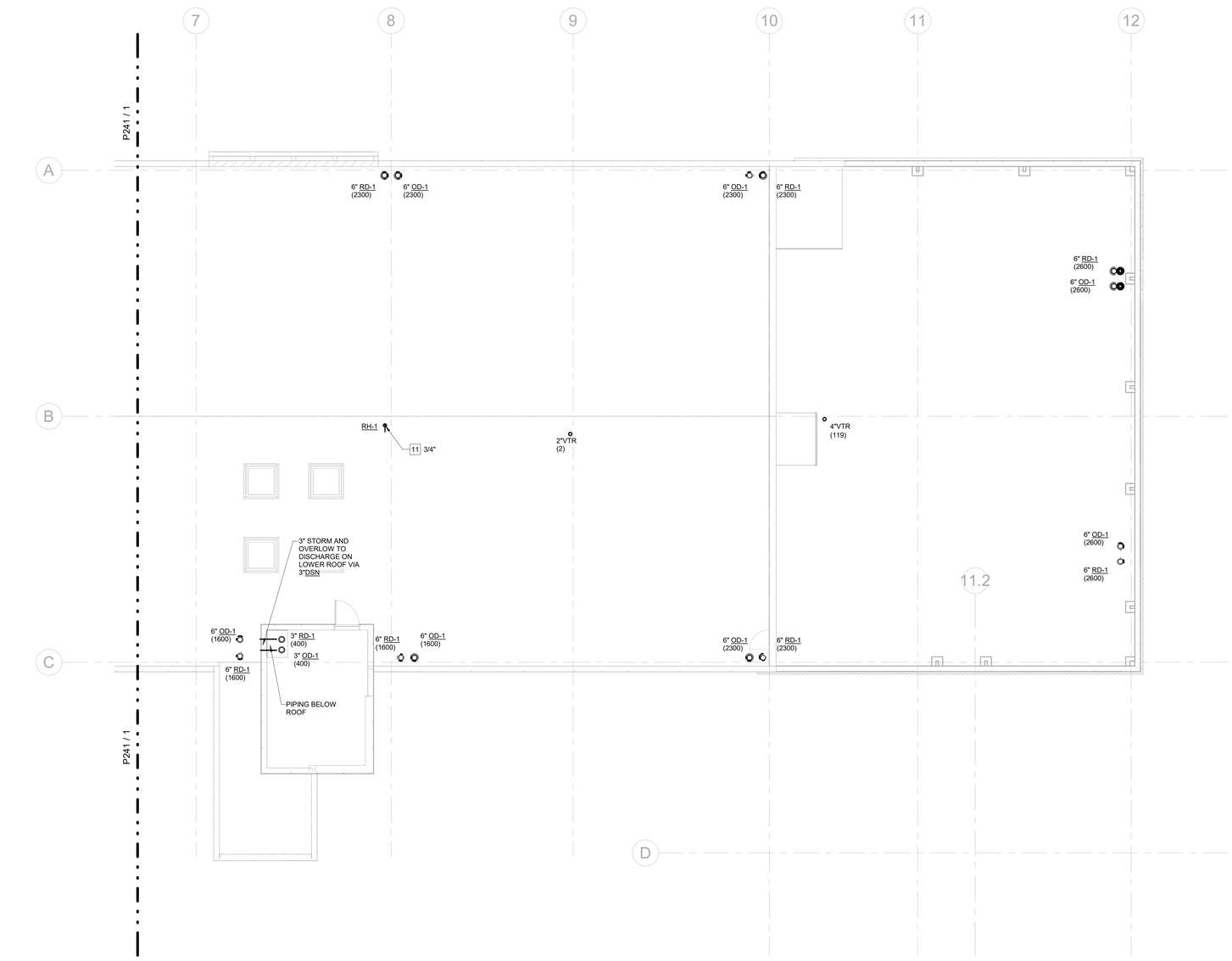

1 ROOF - PLUMBING PLAN - EAST
1/8" = 1'-0"

GENERAL NOTES:

1. REQUIRED PIPE SIZES ARE SHOWN NEXT TO KEY NOTE.

2.PROVIDE BALL VALVE SHUTOFF AND 12"X12" ACCESS PANEL AT EACH SHOCK ABSORBER (SA). PANEL LOCATION TO BE VERIFIED AND COORDINATED WITH ARCHITECT.

3. PROVIDE 12"X12" ACCESS PANEL AT ALL TRAP PRIMER VALVES. COORDINATE WITH ARCHITECT. IF POSSIBLE, LOCATE TRAP PRIMER VALVES NEAR SHOCK ABSORBERS FOR USE WITH (1) ACCESS PANEL.

4. ALL FLOOR DRAINS ARE 2" FD-1 UNLESS NOTED OTHERWISE.

5. ALL INVERT ELEVATIONS (IE) SHALL BE FIELD VERIFIED BEFORE ANY PIPING IS INSTALLED.

6. ALL CIRCUIT SETTERS SHALL BE SET AT 1.0 GPM UNLESS NOTED OTHERWISE.

KEY NOTES:

(SOME KEY NOTES MAY NOT APPLY TO THIS SHEET)

1. SANITARY PIPING UP
2. SANITARY PIPING DN
3. SANITARY PIPING UP & DN
4. GARAGE DRAIN PIPING UP
5. GARAGE DRAIN PIPING DN
6. GARAGE DRAIN PIPING UP & DN
7. SANITARY VENT UP
8. SANITARY VENT DN
9. SANITARY VENT UP & DN
10. CW PIPING UP
11. CW PIPING DN
12. CW PIPING UP & DN
13. HW PIPING UP
14. HW PIPING DN
15. HW PIPING UP & DN
16. HWC PIPING UP
17. HWC PIPING DN
18. HWC PIPING UP & DN
19. CW & HW PIPING UP
20. CW & HW PIPING DN
21. CW & HW PIPING UP & DN
22. GAS (5 PSI) PIPING UP
23. GAS (5 PSI) PIPING DN
24. GAS (5 PSI) PIPING UP & DN
25. GAS (14" W.C.) PIPING UP
26. GAS (14" W.C.) PIPING DN
27. GAS (14" W.C.) PIPING UP & DN
28. STORM PIPING UP
29. STORM PIPING DN
30. STORM PIPING UP & DN
31. OVERFLOW PIPING UP
32. OVERFLOW PIPING DN
33. OVERFLOW PIPING UP &DN
34. OVERFLOW PIPING DOWN AND THRU WALL TO DOWNSPOUT NOZZLE +12" AFG
35. SANITARY PIPING UP TO PLUMBING FIXTURES
36. PIPING UP TO CLEANOUT
37. CW HEADER
38. HW HEADER
39. CW & HW HEADER
40. 1/2" CW & HW TO EACH LAV/SK
41. CW VALVED & CAPPED FOR FOOD SERVICE
42. HW STUBBED & CAPPED FOR FOOD SERVICE
43. VENT STUBBED & CAPPED FOR FOOD SERVICE
44. SAN STUBBED & CAPPED FOR FOOD SERVICE
45. GW STUBBED & CAPPED FOR FOOD SERVICE
46. GAS (10" WC) VALVED FOR FOOD SERVICE
47. PIPING UP TO DRAIN
48. 1/2" CW & HW DOWN TO SHOWER VALVE & 1/2" UP TO SHOWERHEAD
49. 1/2" CW FROM TRAP PRIMER. ROUTE 1/2" CW LINE(S) DOWN BELOW FLOOR TO FLOOR DRAIN PRIMER TAP.
50. 1/2" CW & HW DOWN IN WALL. BRANCH OFF 3/4" CW & HW TO EACH TUB FILLER FAUCET.
51. DOMESTIC HOT & COLD WATER FOR FUTURE EXTENSION
52. PROVIDE FLEXIBLE EXPANSION JOINT TO ACCOMMODATE 8" OF MOVEMENT. INSTALL PER MANUFACTURER RECOMMENDATIONS.
53. PROVIDE ELECTRICAL POWER FOR HARD WIRED FLUSH VALVES AND FAUCETS IN THIS ROOM.
54. PROVIDE ELECTRICAL POWER FOR HEAT TRACE IN THIS AREA
55. PROVIDE HUB DRAIN ON SANITARY RISER IN WALL MECHANICAL CONDENSATE.

BRINKLEY SARGENT WIGINTON ARCHITECTS

Architect: Brinkley Sargent Wigginton Architects (972) 960-9970
Landscape: Kendall Landscape Architecture (214) 739-3226
Structural: L.A. Fuess Partners, Inc (214) 593-1118
MEP: M-E Engineers (214) 741-1589
Civil: KSA Engineers, Inc (903) 236-7700
Technology: M-E Engineers (303) 421-6656

LONGVIEW POLICE DEPARTMENT

518 W. SOUTH ST. LONGVIEW, TEXAS 75601

History		
#	Date	Description

STATE OF TEXAS
LAUREN F. BERRY
117369
LICENSED PROFESSIONAL ENGINEER
ME Engineers, Inc.
F-10231
08/19/2020

ROOF - PLUMBING PLAN - EAST

BID ISSUE

20513
08/19/2020
P242

8/17/2020 9:21:04 AM

C:\Work Projects\20513\LPD_CENTRAL_P1B_ian.wand.rvt

© 2020 Brinkley Sargent Wigginton Architects, Inc.

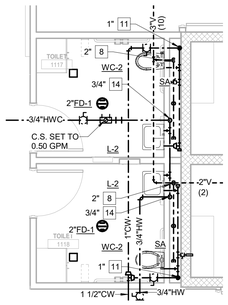

4 LEVEL 1 - PLUMBING ENLARGED PLAN - 1117/1118
1/4" = 1'-0"

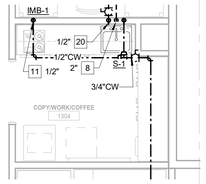

5 LEVEL 1 - PLUMBING ENLARGED PLAN - 1304
1/4" = 1'-0"

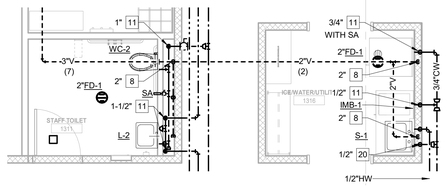

6 LEVEL 1 - PLUMBING ENLARGED PLAN - 1311/1316
1/4" = 1'-0"

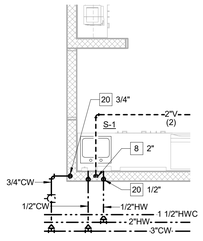

7 LEVEL 1 - PLUMBING ENLARGED PLAN - 1401
1/4" = 1'-0"

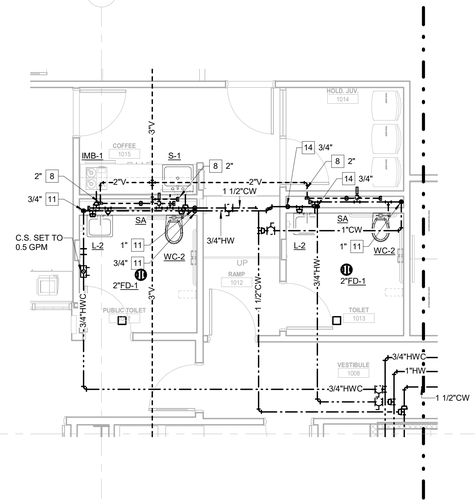

1 LEVEL 1 - PLUMBING ENLARGED PLAN - 1007/1013/1015
1/4" = 1'-0"

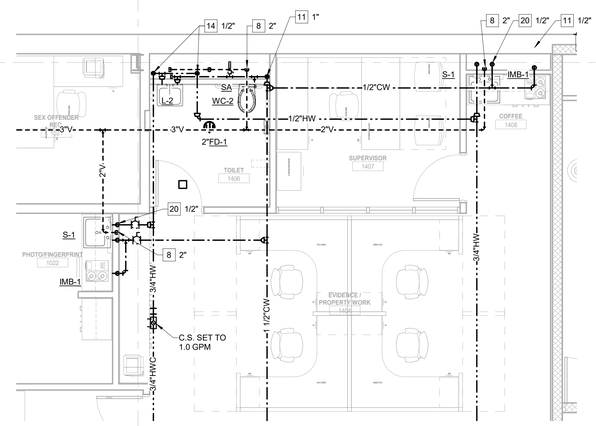

2 LEVEL 1 - PLUMBING ENLARGED PLAN - 1022/1406/1408
1/4" = 1'-0"

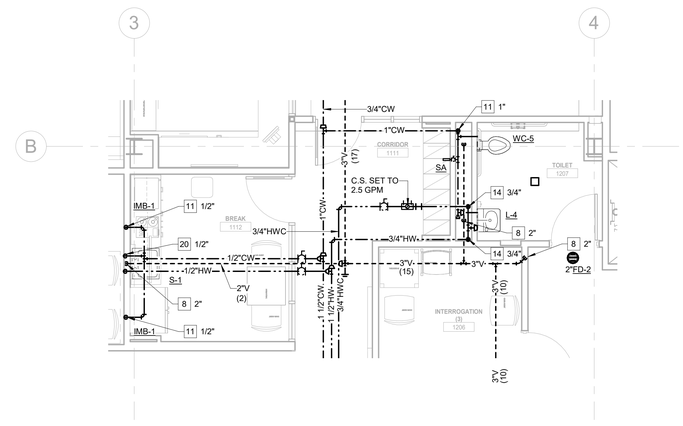

3 LEVEL 1 - PLUMBING ENLARGED PLAN - 1112/1207
1/4" = 1'-0"

GENERAL NOTES:

1. REQUIRED PIPE SIZES ARE SHOWN NEXT TO KEY NOTE.

2.PROVIDE BALL VALVE SHUTOFF AND 12"X12" ACCESS PANEL AT EACH SHOCK ABSORBER (SA). PANEL LOCATION TO BE VERIFIED AND COORDINATED WITH ARCHITECT.

3. PROVIDE 12"X12" ACCESS PANEL AT ALL TRAP PRIMER VALVES. COORDINATE WITH ARCHITECT. IF POSSIBLE, LOCATE TRAP PRIMER VALVES NEAR SHOCK ABSORBERS FOR USE WITH (1) ACCESS PANEL.

4. ALL FLOOR DRAINS ARE 2" FD-1 UNLESS NOTED OTHERWISE.

5. ALL INVERT ELEVATIONS (IE) SHALL BE FIELD VERIFIED BEFORE ANY PIPING IS INSTALLED.

6. ALL CIRCUIT SETTERS SHALL BE SET AT 1.0 GPM UNLESS NOTED OTHERWISE.

KEY NOTES:

(SOME KEY NOTES MAY NOT APPLY TO THIS SHEET)

1. SANITARY PIPING UP
2. SANITARY PIPING DN
3. SANITARY PIPING UP & DN
4. GARAGE DRAIN PIPING UP
5. GARAGE DRAIN PIPING DN
6. GARAGE DRAIN PIPING UP & DN
7. SANITARY VENT UP
8. SANITARY VENT DN
9. SANITARY VENT UP & DN
10. CW PIPING UP
11. CW PIPING DN
12. CW PIPING UP & DN
13. HW PIPING UP
14. HW PIPING DN
15. HW PIPING UP & DN
16. HWC PIPING UP
17. HWC PIPING DN
18. HWC PIPING UP & DN
19. CW & HW PIPING UP
20. CW & HW PIPING DN
21. CW & HW PIPING UP & DN
22. GAS (5 PSI) PIPING UP
23. GAS (5 PSI) PIPING DN
24. GAS (5 PSI) PIPING UP & DN
25. GAS (14" W.C.) PIPING UP
26. GAS (14" W.C.) PIPING DN
27. GAS (14" W.C.) PIPING UP & DN
28. STORM PIPING UP
29. STORM PIPING DN
30. STORM PIPING UP & DN
31. OVERFLOW PIPING UP
32. OVERFLOW PIPING DN
33. OVERFLOW PIPING UP &DN
34. OVERFLOW PIPING DOWN AND THRU WALL TO DOWNSPOUT NOZZLE +12" AFG
35. SANITARY PIPING UP TO PLUMBING FIXTURES
36. PIPING UP TO CLEANOUT
37. CW HEADER
38. HW HEADER
39. CW & HW HEADER
40. 1/2" CW & HW TO EACH LAV/SK
41. CW VALVED & CAPPED FOR FOOD SERVICE
42. HW STUBBED & CAPPED FOR FOOD SERVICE
43. VENT STUBBED & CAPPED FOR FOOD SERVICE
44. SAN STUBBED & CAPPED FOR FOOD SERVICE
45. GW STUBBED & CAPPED FOR FOOD SERVICE
46. GAS (10" WC) VALVED FOR FOOD SERVICE
47. PIPING UP TO DRAIN
48. 1/2" CW & HW DOWN TO SHOWER VALVE & 1/2" UP TO SHOWERHEAD
49. 1/2" CW FROM TRAP PRIMER. ROUTE 1/2" CW LINE(S) DOWN BELOW FLOOR TO FLOOR DRAIN PRIMER TAP.
50. 1/2" CW & HW DOWN IN WALL. BRANCH OFF 3/4" CW & HW TO EACH TUB FILLER FAUCET.
51. DOMESTIC HOT & COLD WATER FOR FUTURE EXTENSION
52. PROVIDE FLEXIBLE EXPANSION JOINT TO ACCOMMODATE 8" OF MOVEMENT. INSTALL PER MANUFACTURER RECOMMENDATIONS.
53. PROVIDE ELECTRICAL POWER FOR HARD WIRED FLUSH VALVES AND FAUCETS IN THIS ROOM.
54. PROVIDE ELECTRICAL POWER FOR HEAT TRACE IN THIS AREA
55. PROVIDE HUB DRAIN ON SANITARY RISER IN WALL MECHANICAL CONDENSATE.

BRINKLEY SARGENT WIGGINTON ARCHITECTS

Architect: Brinkley Sargent Wigginton Architects (972) 960-9970
Landscape: Kendall Landscape Architecture (214) 739-3226
Structural: L.A. Fuess Partners, Inc (214) 593-1118
MEP: M-E Engineers (214) 741-1589
Civil: KSA Engineers, Inc (903) 236-7700
Technology: M-E Engineers (303) 421-6656

LONGVIEW POLICE DEPARTMENT

518 W. SOUTH ST. LONGVIEW, TEXAS 75601

History		
#	Date	Description

STATE OF TEXAS
LAUREN F. BERRY
117369
LICENSED
PROFESSIONAL ENGINEER
ME Engineers, Inc.
F-10231
08/19/2020

LEVEL 1 - PLUMBING ENLARGED PLANS

20513
08/19/2020

P301

BID ISSUE

8/17/2020 9:21:21 AM

E:\Revit Projects\2019\LPD_CENTRAL_FY19_rvn-wed.rvt

© 2020 Brinkley Sargent Wigginton Architects, Inc.

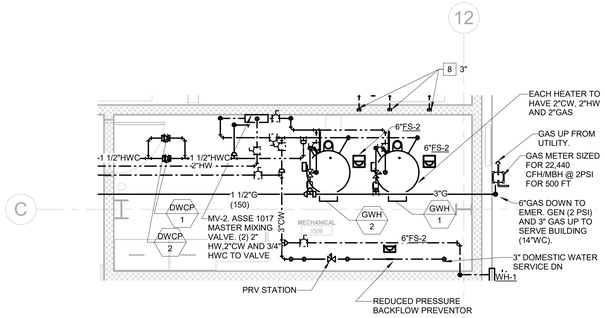

5 LEVEL 1 - PLUMBING ENLARGED PLAN - 1506
1/4" = 1'-0"

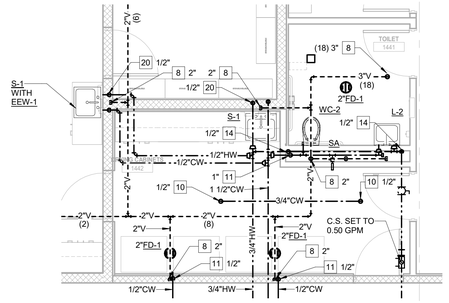

3 LEVEL 1 - PLUMBING ENLARGED PLAN - 1441/1442
1/4" = 1'-0"

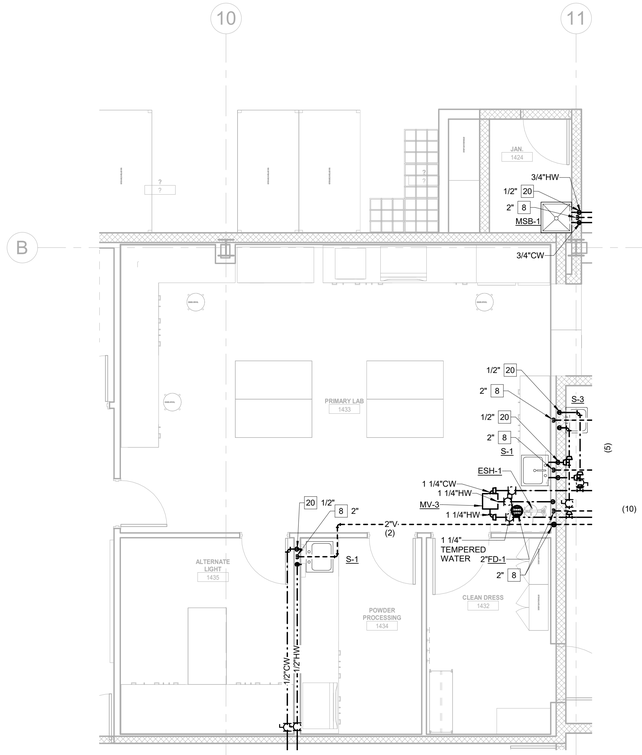

1 LEVEL 1 - PLUMBING ENLARGED PLAN - 1422/1433/1434
1/4" = 1'-0"

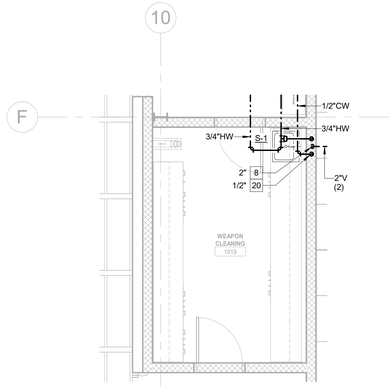

6 LEVEL 1 - PLUMBING ENLARGED PLAN - 1519
1/4" = 1'-0"

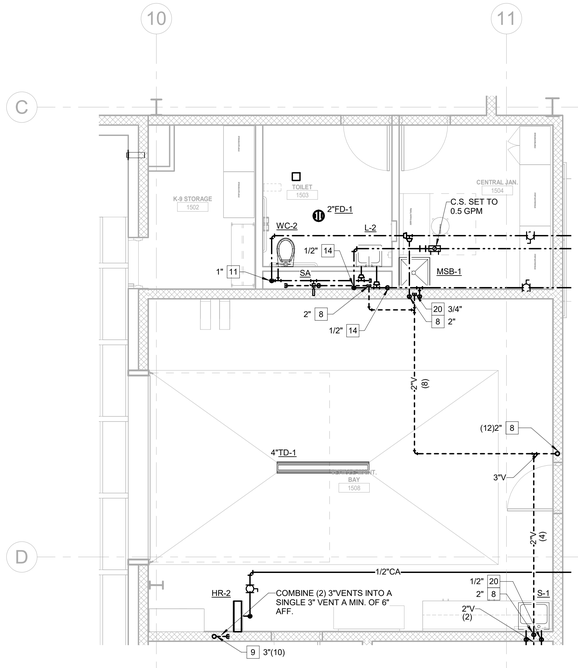

4 LEVEL 1 - PLUMBING ENLARGED PLAN - 1503/1504/1508
1/4" = 1'-0"

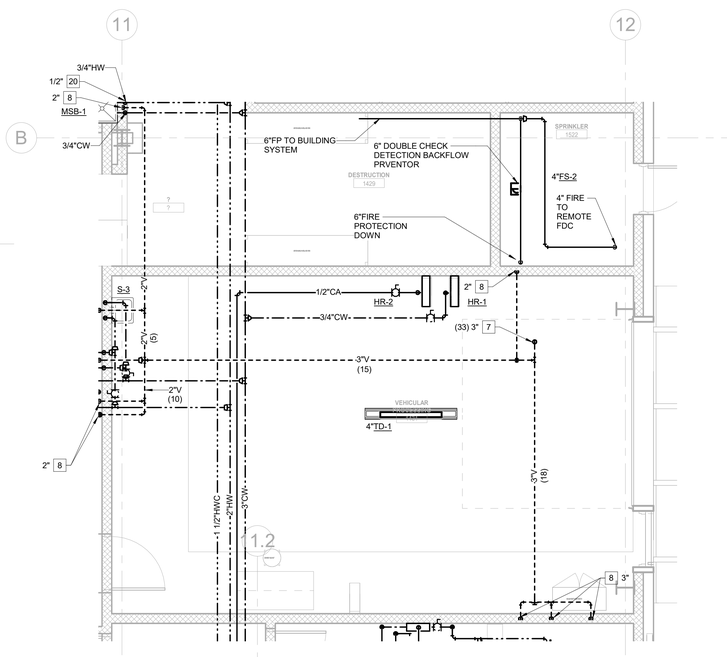

2 LEVEL 1 - PLUMBING ENLARGED PLAN - 1431
1/4" = 1'-0"

GENERAL NOTES:

1. REQUIRED PIPE SIZES ARE SHOWN NEXT TO KEY NOTE.

2.PROVIDE BALL VALVE SHUTOFF AND 12"X12" ACCESS PANEL AT EACH SHOCK ABSORBER (SA). PANEL LOCATION TO BE VERIFIED AND COORDINATED WITH ARCHITECT.

3. PROVIDE 12"X12" ACCESS PANEL AT ALL TRAP PRIMER VALVES. COORDINATE WITH ARCHITECT. IF POSSIBLE, LOCATE TRAP PRIMER VALVES NEAR SHOCK ABSORBERS FOR USE WITH (1) ACCESS PANEL.

4. ALL FLOOR DRAINS ARE 2" FD-1 UNLESS NOTED OTHERWISE.

5. ALL INVERT ELEVATIONS (IE) SHALL BE FIELD VERIFIED BEFORE ANY PIPING IS INSTALLED.

6. ALL CIRCUIT SETTERS SHALL BE SET AT 1.0 GPM UNLESS NOTED OTHERWISE.

KEY NOTES:

(SOME KEY NOTES MAY NOT APPLY TO THIS SHEET)

1. SANITARY PIPING UP
2. SANITARY PIPING DN
3. SANITARY PIPING UP & DN
4. GARAGE DRAIN PIPING UP
5. GARAGE DRAIN PIPING DN
6. GARAGE DRAIN PIPING UP & DN
7. SANITARY VENT UP
8. SANITARY VENT DN
9. SANITARY VENT UP & DN
10. CW PIPING UP
11. CW PIPING DN
12. CW PIPING UP & DN
13. HW PIPING UP
14. HW PIPING DN
15. HW PIPING UP & DN
16. HWC PIPING UP
17. HWC PIPING DN
18. HWC PIPING UP & DN
19. CW & HW PIPING UP
20. CW & HW PIPING DN
21. CW & HW PIPING UP & DN
22. GAS (5 PSI) PIPING UP
23. GAS (5 PSI) PIPING DN
24. GAS (5 PSI) PIPING UP & DN
25. GAS (14" W.C.) PIPING UP
26. GAS (14" W.C.) PIPING DN
27. GAS (14" W.C.) PIPING UP & DN
28. STORM PIPING UP
29. STORM PIPING DN
30. STORM PIPING UP & DN
31. OVERFLOW PIPING UP
32. OVERFLOW PIPING DN
33. OVERFLOW PIPING UP &DN
34. OVERFLOW PIPING DOWN AND THRU WALL TO DOWNSPOUT NOZZLE +12" AFG
35. SANITARY PIPING UP TO PLUMBING FIXTURES
36. PIPING UP TO CLEANOUT
37. CW HEADER
38. HW HEADER
39. CW & HW HEADER
40. 1/2" CW & HW TO EACH LAV/SK
41. CW VALVED & CAPPED FOR FOOD SERVICE
42. HW STUBBED & CAPPED FOR FOOD SERVICE
43. VENT STUBBED & CAPPED FOR FOOD SERVICE
44. SAN STUBBED & CAPPED FOR FOOD SERVICE
45. GW STUBBED & CAPPED FOR FOOD SERVICE
46. GAS (10" WC) VALVED FOR FOOD SERVICE
47. PIPING UP TO DRAIN
48. 1/2" CW & HW DOWN TO SHOWER VALVE & 1/2" UP TO SHOWERHEAD
49. 1/2" CW FROM TRAP PRIMER. ROUTE 1/2" CW LINE(S) DOWN BELOW FLOOR TO FLOOR DRAIN PRIMER TAP.
50. 1/2" CW & HW DOWN IN WALL. BRANCH OFF 3/4" CW & HW TO EACH TUB FILLER FAUCET.
51. DOMESTIC HOT & COLD WATER FOR FUTURE EXTENSION
52. PROVIDE FLEXIBLE EXPANSION JOINT TO ACCOMMODATE 8" OF MOVEMENT. INSTALL PER MANUFACTURER RECOMMENDATIONS.
53. PROVIDE ELECTRICAL POWER FOR HARD WIRED FLUSH VALVES AND FAUCETS IN THIS ROOM.
54. PROVIDE ELECTRICAL POWER FOR HEAT TRACE IN THIS AREA
55. PROVIDE HUB DRAIN ON SANITARY RISER IN WALL MECHANICAL CONDENSATE.

BRINKLEY SARGENT WIGINTON ARCHITECTS

Architect: Brinkley Sargent Wigginton Architects (972) 960-9970
Landscape: Kendall Landscape Architecture (214) 739-3226
Structural: L.A. Fuess Partners, Inc (214) 593-1118
MEP: M-E Engineers (214) 741-1589
Civil: KSA Engineers, Inc (903) 236-7700
Technology: M-E Engineers (303) 421-6656

LONGVIEW POLICE DEPARTMENT

518 W. SOUTH ST. LONGVIEW, TEXAS 75601

History		
#	Date	Description

STATE OF TEXAS
LAUREN F. BERRY
117369
LICENSED
PROFESSIONAL ENGINEER
ME Engineers, Inc.
F-10231
08/19/2020

LEVEL 1 - PLUMBING ENLARGED PLANS

20513
08/19/2020

P302

BID ISSUE

8/17/2020 9:21:18 AM

C:\Revit Projects\2019\LPD_CENTRAL_P19_rvt-worksset

© 2020 Brinkley Sargent Wigginton Architects, Inc.

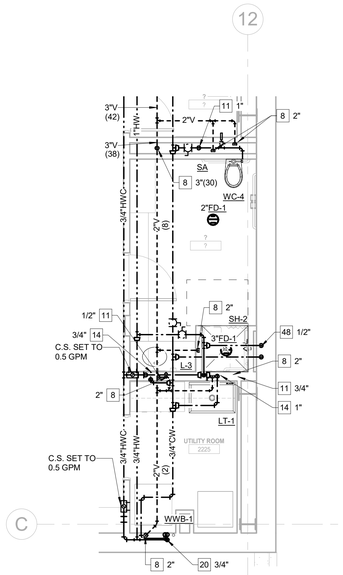

5 LEVEL 2 - PLUMBING ENLARGED PLAN - 2224/2225
1/4" = 1'-0"

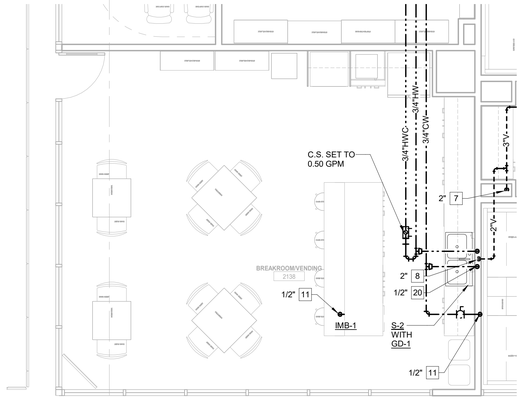

3 LEVEL 2 - PLUMBING ENLARGED PLAN - 2138
1/4" = 1'-0"

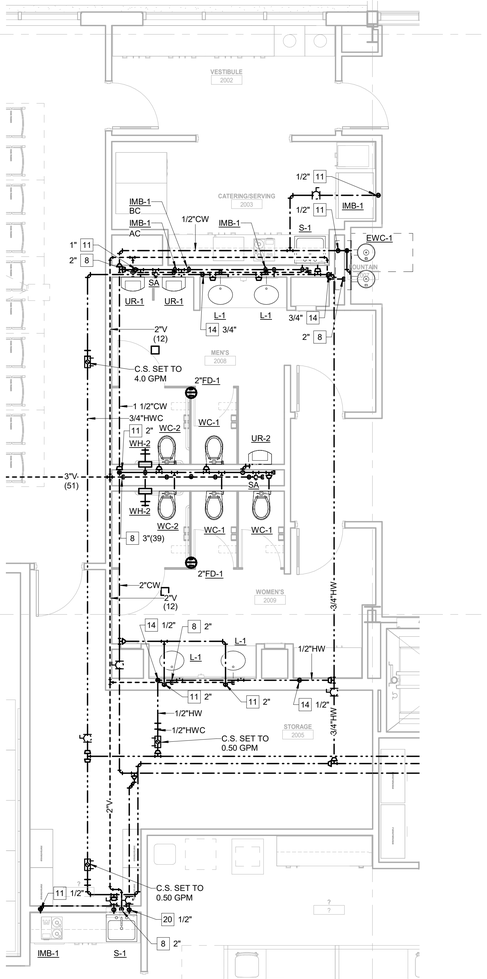

1 LEVEL 2 - PLUMBING ENLARGED PLAN - 2006/2008/2009
1/4" = 1'-0"

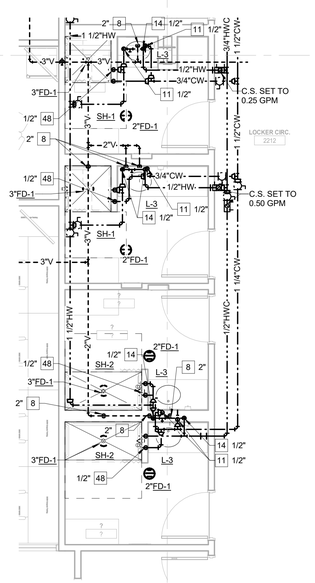

6 LEVEL 2 - PLUMBING ENLARGED PLAN - 2226/2227/2228/2229
1/4" = 1'-0"

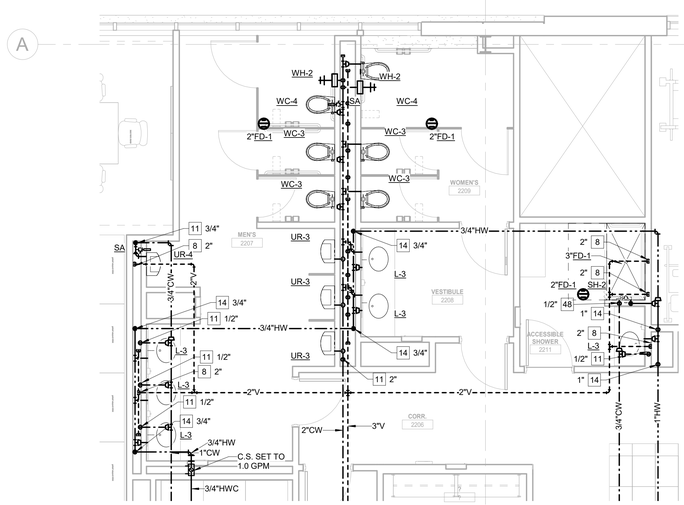

4 LEVEL 2 - PLUMBING ENLARGED PLAN - 2207/2209/2211
1/4" = 1'-0"

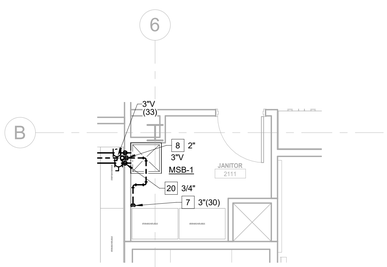

2 LEVEL 2 - PLUMBING ENLARGED PLAN - 2111
1/4" = 1'-0"

GENERAL NOTES:

1. REQUIRED PIPE SIZES ARE SHOWN NEXT TO KEY NOTE.

2.PROVIDE BALL VALVE SHUTOFF AND 12"X12" ACCESS PANEL AT EACH SHOCK ABSORBER (SA). PANEL LOCATION TO BE VERIFIED AND COORDINATED WITH ARCHITECT.

3. PROVIDE 12"X12" ACCESS PANEL AT ALL TRAP PRIMER VALVES. COORDINATE WITH ARCHITECT. IF POSSIBLE, LOCATE TRAP PRIMER VALVES NEAR SHOCK ABSORBERS FOR USE WITH (1) ACCESS PANEL.

4. ALL FLOOR DRAINS ARE 2" FD-1 UNLESS NOTED OTHERWISE.

5. ALL INVERT ELEVATIONS (IE) SHALL BE FIELD VERIFIED BEFORE ANY PIPING IS INSTALLED.

6. ALL CIRCUIT SETTERS SHALL BE SET AT 1.0 GPM UNLESS NOTED OTHERWISE.

KEY NOTES:

(SOME KEY NOTES MAY NOT APPLY TO THIS SHEET)

1. SANITARY PIPING UP
2. SANITARY PIPING DN
3. SANITARY PIPING UP & DN
4. GARAGE DRAIN PIPING UP
5. GARAGE DRAIN PIPING DN
6. GARAGE DRAIN PIPING UP & DN
7. SANITARY VENT UP
8. SANITARY VENT DN
9. SANITARY VENT UP & DN
10. CW PIPING UP
11. CW PIPING DN
12. CW PIPING UP & DN
13. HW PIPING UP
14. HW PIPING DN
15. HW PIPING UP & DN
16. HWC PIPING UP
17. HWC PIPING DN
18. HWC PIPING UP & DN
19. CW & HW PIPING UP
20. CW & HW PIPING DN
21. CW & HW PIPING UP & DN
22. GAS (5 PSI) PIPING UP
23. GAS (5 PSI) PIPING DN
24. GAS (5 PSI) PIPING UP & DN
25. GAS (14" W.C.) PIPING UP
26. GAS (14" W.C.) PIPING DN
27. GAS (14" W.C.) PIPING UP & DN
28. STORM PIPING UP
29. STORM PIPING DN
30. STORM PIPING UP & DN
31. OVERFLOW PIPING UP
32. OVERFLOW PIPING DN
33. OVERFLOW PIPING UP &DN
34. OVERFLOW PIPING DOWN AND THRU WALL TO DOWNSPOUT NOZZLE +12" AFG
35. SANITARY PIPING UP TO PLUMBING FIXTURES
36. PIPING UP TO CLEANOUT
37. CW HEADER
38. HW HEADER
39. CW & HW HEADER
40. 1/2" CW & HW TO EACH LAV/SK
41. CW VALVED & CAPPED FOR FOOD SERVICE
42. HW STUBBED & CAPPED FOR FOOD SERVICE
43. VENT STUBBED & CAPPED FOR FOOD SERVICE
44. SAN STUBBED & CAPPED FOR FOOD SERVICE
45. GW STUBBED & CAPPED FOR FOOD SERVICE
46. GAS (10" WC) VALVED FOR FOOD SERVICE
47. PIPING UP TO DRAIN
48. 1/2" CW & HW DOWN TO SHOWER VALVE & 1/2" UP TO SHOWERHEAD
49. 1/2" CW FROM TRAP PRIMER. ROUTE 1/2" CW LINE(S) DOWN BELOW FLOOR TO FLOOR DRAIN PRIMER TAP.
50. 1/2" CW & HW DOWN IN WALL. BRANCH OFF 3/4" CW & HW TO EACH TUB FILLER FAUCET.
51. DOMESTIC HOT & COLD WATER FOR FUTURE EXTENSION
52. PROVIDE FLEXIBLE EXPANSION JOINT TO ACCOMMODATE 8" OF MOVEMENT. INSTALL PER MANUFACTURER RECOMMENDATIONS.
53. PROVIDE ELECTRICAL POWER FOR HARD WIRED FLUSH VALVES AND FAUCETS IN THIS ROOM.
54. PROVIDE ELECTRICAL POWER FOR HEAT TRACE IN THIS AREA
55. PROVIDE HUB DRAIN ON SANITARY RISER IN WALL MECHANICAL CONDENSATE.

BRINKLEY SARGENT WIGINTON ARCHITECTS

Architect: Brinkley Sargent Wigginton Architects (972) 960-9970
Landscape: Kendall Landscape Architecture (214) 739-3226
Structural: L.A. Fuess Partners, Inc (214) 593-1118
MEP: M-E Engineers (214) 741-1589
Civil: KSA Engineers, Inc (903) 236-7700
Technology: M-E Engineers (303) 421-6656

LONGVIEW POLICE DEPARTMENT

518 W. SOUTH ST. LONGVIEW, TEXAS 75601

History		
#	Date	Description

STATE OF TEXAS
LAUREN F. BERRY
117369
LICENSED PROFESSIONAL ENGINEER
ME Engineers, Inc.
F-10231
08/19/2020

LEVEL 2 - PLUMBING ENLARGED PLANS

BID ISSUE

20513
08/19/2020
P303

8/17/2020 9:21:51 AM

C:\Revit Projects\20513\LPD_CENTRAL_PYB_jonathan.rvt

© 2020 Brinkley Sargent Wigginton Architects, Inc.

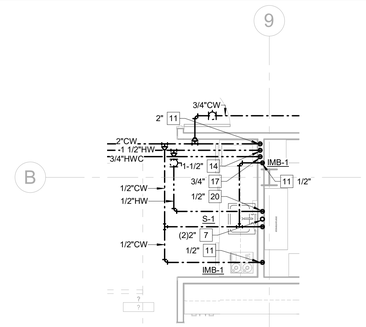

4 LEVEL 3 - PLUMBING ENLARGED PLAN - 3126
1/4" = 1'-0"

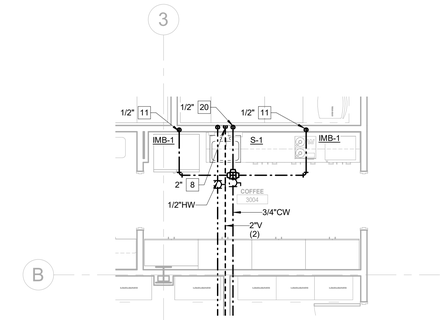

1 LEVEL 3 - PLUMBING ENLARGED PLAN - 3004
1/4" = 1'-0"

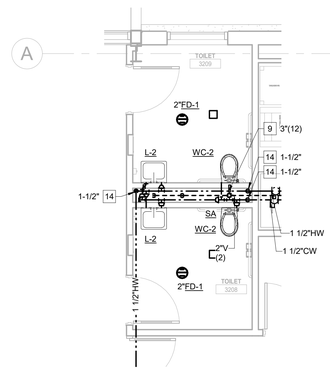

5 LEVEL 3 - PLUMBING ENLARGED PLAN - 3208/3209
1/4" = 1'-0"

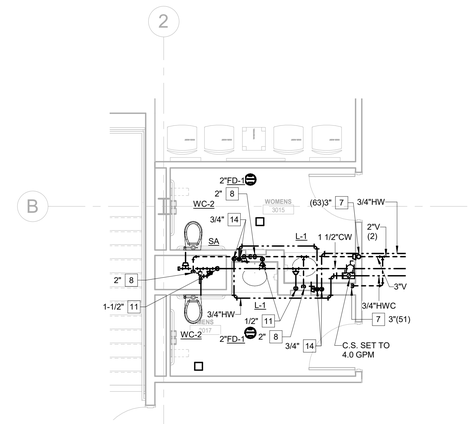

2 LEVEL 3 - PLUMBING ENLARGED PLAN - 3015/3017
1/4" = 1'-0"

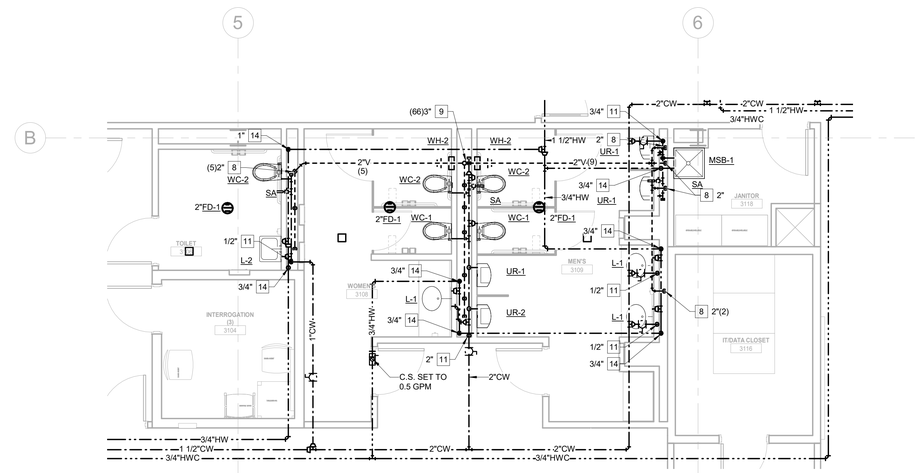

3 LEVEL 3 - PLUMBING ENLARGED PLAN - 3106/3108/3109/3118
1/4" = 1'-0"

GENERAL NOTES:

1. REQUIRED PIPE SIZES ARE SHOWN NEXT TO KEY NOTE.

2.PROVIDE BALL VALVE SHUTOFF AND 12"X12" ACCESS PANEL AT EACH SHOCK ABSORBER (SA). PANEL LOCATION TO BE VERIFIED AND COORDINATED WITH ARCHITECT.

3. PROVIDE 12"X12" ACCESS PANEL AT ALL TRAP PRIMER VALVES. COORDINATE WITH ARCHITECT. IF POSSIBLE, LOCATE TRAP PRIMER VALVES NEAR SHOCK ABSORBERS FOR USE WITH (1) ACCESS PANEL.

4. ALL FLOOR DRAINS ARE 2" FD-1 UNLESS NOTED OTHERWISE.

5. ALL INVERT ELEVATIONS (IE) SHALL BE FIELD VERIFIED BEFORE ANY PIPING IS INSTALLED.

6. ALL CIRCUIT SETTERS SHALL BE SET AT 1.0 GPM UNLESS NOTED OTHERWISE.

KEY NOTES:

(SOME KEY NOTES MAY NOT APPLY TO THIS SHEET)

1. SANITARY PIPING UP
2. SANITARY PIPING DN
3. SANITARY PIPING UP & DN
4. GARAGE DRAIN PIPING UP
5. GARAGE DRAIN PIPING DN
6. GARAGE DRAIN PIPING UP & DN
7. SANITARY VENT UP
8. SANITARY VENT DN
9. SANITARY VENT UP & DN
10. CW PIPING UP
11. CW PIPING DN
12. CW PIPING UP & DN
13. HW PIPING UP
14. HW PIPING DN
15. HW PIPING UP & DN
16. HWC PIPING UP
17. HWC PIPING DN
18. HWC PIPING UP & DN
19. CW & HW PIPING UP
20. CW & HW PIPING DN
21. CW & HW PIPING UP & DN
22. GAS (5 PSI) PIPING UP
23. GAS (5 PSI) PIPING DN
24. GAS (5 PSI) PIPING UP & DN
25. GAS (14" W.C.) PIPING UP
26. GAS (14" W.C.) PIPING DN
27. GAS (14" W.C.) PIPING UP & DN
28. STORM PIPING UP
29. STORM PIPING DN
30. STORM PIPING UP & DN
31. OVERFLOW PIPING UP
32. OVERFLOW PIPING DN
33. OVERFLOW PIPING UP &DN
34. OVERFLOW PIPING DOWN AND THRU WALL TO DOWNSPOUT NOZZLE +12" AFG
35. SANITARY PIPING UP TO PLUMBING FIXTURES
36. PIPING UP TO CLEANOUT
37. CW HEADER
38. HW HEADER
39. CW & HW HEADER
40. 1/2" CW & HW TO EACH LAV/SK
41. CW VALVED & CAPPED FOR FOOD SERVICE
42. HW STUBBED & CAPPED FOR FOOD SERVICE
43. VENT STUBBED & CAPPED FOR FOOD SERVICE
44. SAN STUBBED & CAPPED FOR FOOD SERVICE
45. GW STUBBED & CAPPED FOR FOOD SERVICE
46. GAS (10" WC) VALVED FOR FOOD SERVICE
47. PIPING UP TO DRAIN
48. 1/2" CW & HW DOWN TO SHOWER VALVE & 1/2" UP TO SHOWERHEAD
49. 1/2" CW FROM TRAP PRIMER. ROUTE 1/2" CW LINE(S) DOWN BELOW FLOOR TO FLOOR DRAIN PRIMER TAP.
50. 1/2" CW & HW DOWN IN WALL. BRANCH OFF 3/4" CW & HW TO EACH TUB FILLER FAUCET.
51. DOMESTIC HOT & COLD WATER FOR FUTURE EXTENSION
52. PROVIDE FLEXIBLE EXPANSION JOINT TO ACCOMMODATE 8" OF MOVEMENT. INSTALL PER MANUFACTURER RECOMMENDATIONS.
53. PROVIDE ELECTRICAL POWER FOR HARD WIRED FLUSH VALVES AND FAUCETS IN THIS ROOM.
54. PROVIDE ELECTRICAL POWER FOR HEAT TRACE IN THIS AREA
55. PROVIDE HUB DRAIN ON SANITARY RISER IN WALL MECHANICAL CONDENSATE.

BRINKLEY SARGENT WIGINTON ARCHITECTS

Architect: Brinkley Sargent Wigginton Architects (972) 960-9970
Landscape: Kendall Landscape Architecture (214) 739-3226
Structural: L.A. Fuess Partners, Inc (214) 593-1118
MEP: M-E Engineers (214) 741-1589
Civil: KSA Engineers, Inc (903) 236-7700
Technology: M-E Engineers (303) 421-6656

LONGVIEW POLICE DEPARTMENT

518 W. SOUTH ST. LONGVIEW, TEXAS 75601

History		
#	Date	Description

STATE OF TEXAS
LAUREN F. BERRY
117369
LICENSED
PROFESSIONAL ENGINEER

ME Engineers, Inc.
F-10231
08/19/2020

LEVEL 3 - PLUMBING ENLARGED PLANS

20513
08/19/2020

P304

BID ISSUE

C:\Revit Projects\2019\UPD_CENTRAL_P19_ccm.wsf.rvt
8/17/2020 9:25:01 AM

© 2020 Brinkley Sargent Wigginton Architects, Inc.

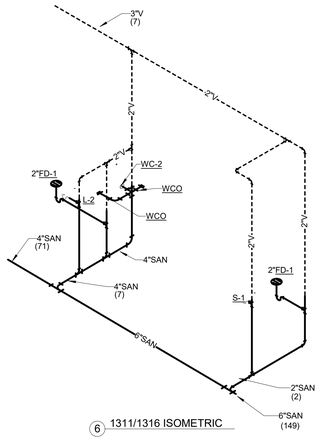

6 1311/1316 ISOMETRIC

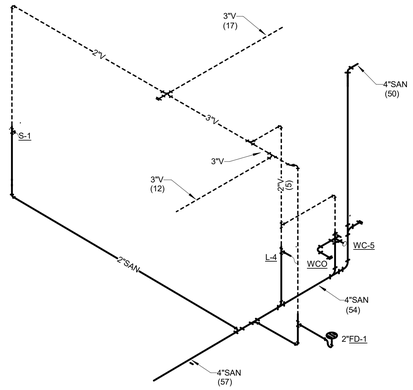

3 1112/1207 ISOMETRIC

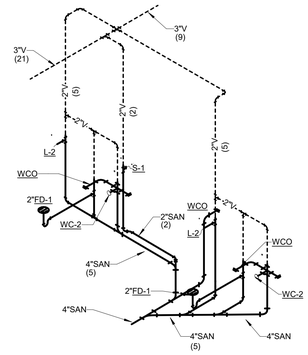

1 1007/1013/1015 ISOMETRIC

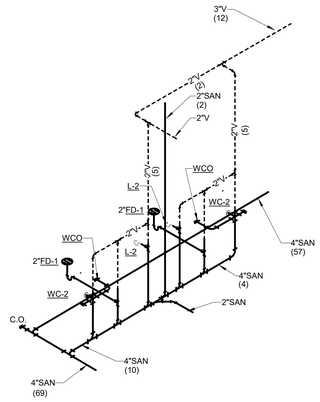

4 1117/1118 ISOMETRIC

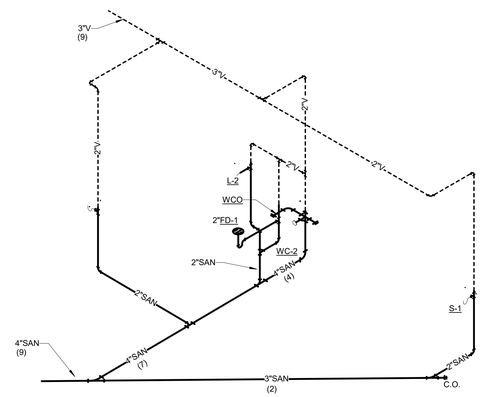

2 1022/1406/1408 ISOMETRIC

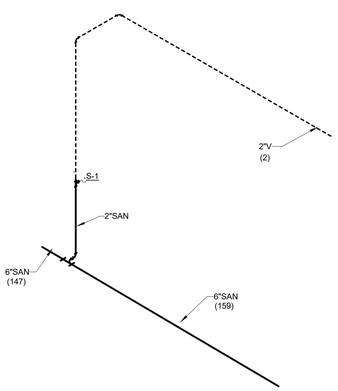

7 1401 ISOMETRIC

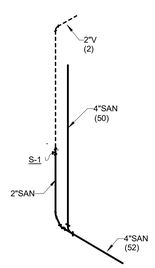

5 1304 ISOMETRIC

NOTE: REFERENCE PLUMBING FIXTURE SCHEDULE ON SHEET P002 FOR REQUIRED SANITARY AND VENT SIZIING REQUIRED FOR INDIVISUAL FIXTURES, OTHER THAN FLOOR SINKS AND DRAINS WHICH ARE SHOWN HERE.

Architect: Brinkley Sargent Wigginton Architects (972) 960-9970
Landscape: Kendall Landscape Architecture (214) 739-3226
Structural: L.A. Fuess Partners, Inc (214) 593-1118
MEP: M-E Engineers (214) 741-1589
Civil: KSA Engineers, Inc (903) 236-7700
Technology: M-E Engineers (303) 421-6656

BRINKLEY SARGENT WIGINTON ARCHITECTS

LONGVIEW POLICE DEPARTMENT

518 W. SOUTH ST. LONGVIEW, TEXAS 75601

History		
#	Date	Description

STATE OF TEXAS
LAUREN F. BERRY
117369
LICENSED
PROFESSIONAL ENGINEER

ME Engineers, Inc.
F-10231
08/19/2020

LEVEL 1 - SANITARY ISOMETRICS

BID ISSUE

20513
08/19/2020

P401

6/17/2020 9:22:09 AM

C:\Revit Projects\2015\JRL_CENTRAL_P19_ceh.rvt

© 2020 Brinkley Sargent Wigginton Architects, Inc.

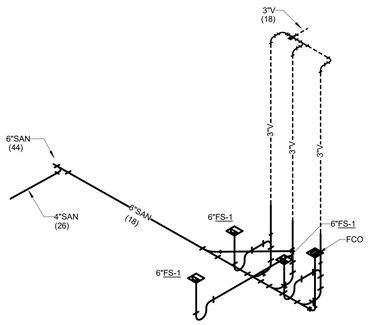

5 1506 ISOMETRIC

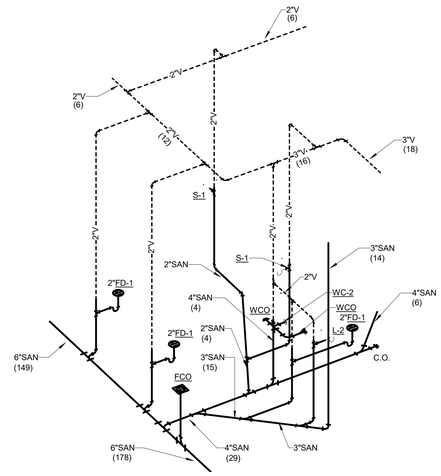

3 1441/1442 ISOMETRIC

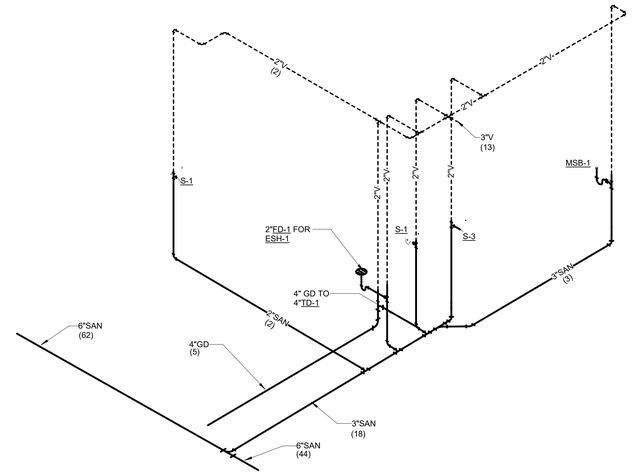

1 1422/1433/1434 ISOMETRIC

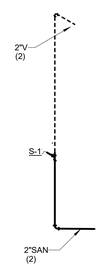

6 1519 ISOMETRIC

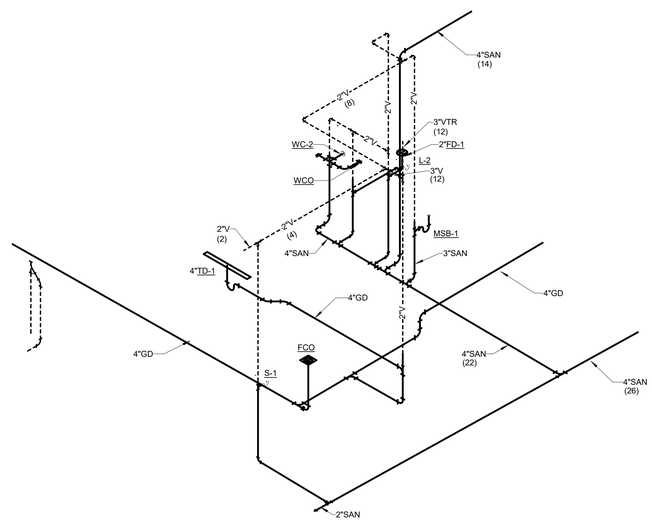

4 1503/1504/1508 ISOMETRIC

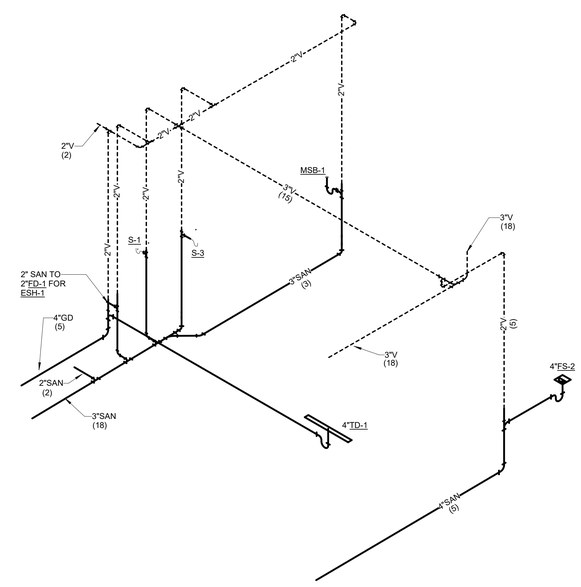

2 1431 ISOMETRIC

NOTE: REFERENCE PLUMBING FIXTURE SCHEDULE ON SHEET P002 FOR REQUIRED SANITARY AND VENT SIZIING REQUIRED FOR INDIVISUAL FIXTURES, OTHER THAN FLOOR SINKS AND DRAINS WHICH ARE SHOWN HERE.

BRINKLEY SARGENT WIGINTON ARCHITECTS

Architect: Brinkley Sargent Wigginton Architects (972) 960-9970
Landscape: Kendall Landscape Architecture (214) 739-3226
Structural: L.A. Fuess Partners, Inc (214) 593-1118
MEP: M-E Engineers (214) 741-1589
Civil: KSA Engineers, Inc (903) 236-7700
Technology: M-E Engineers (303) 421-6656

LONGVIEW POLICE DEPARTMENT

518 W. SOUTH ST. LONGVIEW, TEXAS 75601

History		
#	Date	Description

STATE OF TEXAS
LAUREN F. BERRY
117369
LICENSED PROFESSIONAL ENGINEER
ME Engineers, Inc.
F-10231
08/19/2020

LEVEL 1 - SANITARY ISOMETRICS

BID ISSUE

20513
08/19/2020
P402

8/17/2020 9:22:05 AM

C:\Work Projects\2019\JPD_CENTRAL_P1B_cen-wend.rvt

© 2020 Brinkley Sargent Wigginton Architects, Inc.

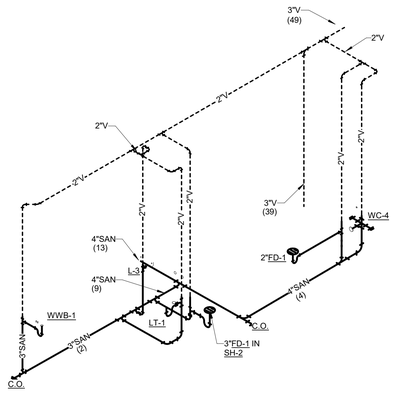

5 2224/2225 ISOMETRIC

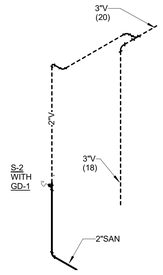

3 2138 ISOMETRIC

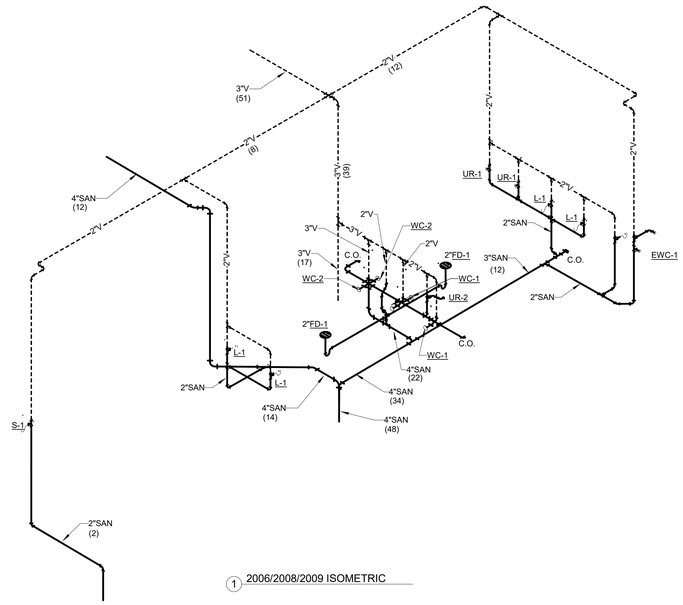

1 2006/2008/2009 ISOMETRIC

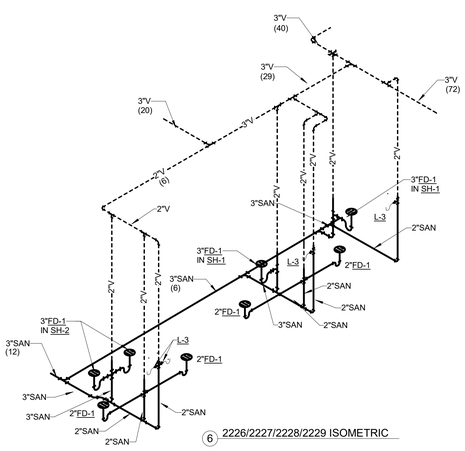

6 2226/2227/2228/2229 ISOMETRIC

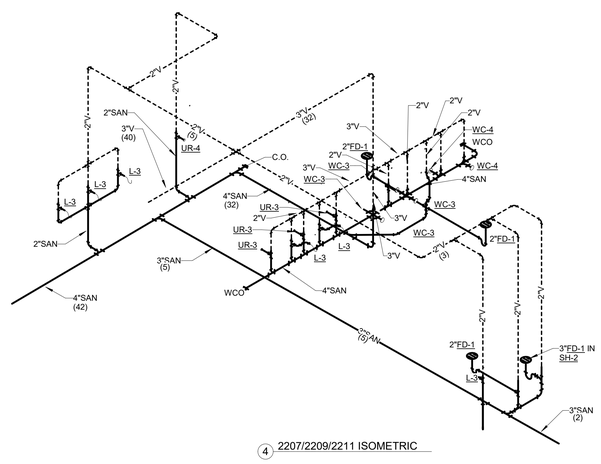

4 2207/2209/2211 ISOMETRIC

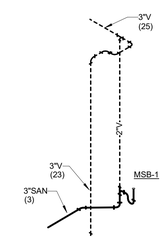

2 2111 ISOMETRIC

NOTE: REFERENCE PLUMBING FIXTURE SCHEDULE ON SHEET P002 FOR REQUIRED SANITARY AND VENT SIZIING REQUIRED FOR INDIVISUAL FIXTURES, OTHER THAN FLOOR SINKS AND DRAINS WHICH ARE SHOWN HERE.

Architect: Brinkley Sargent Wigginton Architects (972) 960-9970
Landscape: Kendall Landscape Architecture (214) 739-3226
Structural: L.A. Fuess Partners, Inc (214) 593-1118
MEP: M-E Engineers (214) 741-1589
Civil: KSA Engineers, Inc (903) 236-7700
Technology: M-E Engineers (303) 421-6656

BRINKLEY SARGENT WIGINTON ARCHITECTS

LONGVIEW POLICE DEPARTMENT

518 W. SOUTH ST. LONGVIEW, TEXAS 75601

History		
#	Date	Description

STATE OF TEXAS
LAUREN F. BERRY
117369
LICENSED
PROFESSIONAL ENGINEER

ME Engineers, Inc.
F-10231
08/19/2020

LEVEL 2 - SANITARY ISOMETRICS

20513
08/19/2020

P403

BID ISSUE

6/17/2020 9:22:08 AM

C:\Revit Projects\2015\RJL_CENTRAL_P19_ver.rvt

BID ISSUE

BRINKLEY SARGENT WIGINTON ARCHITECTS

LONGVIEW POLICE DEPARTMENT

518 W. SOUTH ST. LONGVIEW, TEXAS 75601

Architect: Brinkley Sargent Wigington Architects (972) 960-9970
Landscape: Kendall Landscape Architecture (214) 739-3226
Structural: L.A. Fuess Partners, Inc (214) 593-1118
MEP: M-E Engineers (214) 741-1589
Civil: KSA Engineers, Inc (903) 236-7700
Technology: M-E Engineers (303) 421-6656

History		
#	Date	Description

STATE OF TEXAS
LAUREN F. BERRY
117369
Licensed
PROFESSIONAL ENGINEER
ME Engineers, Inc.
F-10231
Date 08/19/2020

LEVEL 3 - SANITARY ISOMETRICS

20513

08/19/2020

P404

NOTE: REFERENCE PLUMBING FIXTURE SCHEDULE ON SHEET P002 FOR SPECIFICATIONS AND DETAILS FOR ALL FIXTURES. SEE FIXTURE INDIVISUAL FIXTURES. OTHER THAN FLOOR SINKS AND DRAINS WHICH ARE SHOWN HERE.

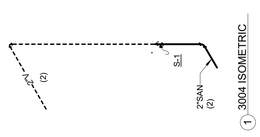

1 3004 ISOMETRIC

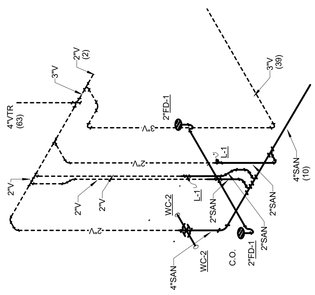

2 3015/3017 ISOMETRIC

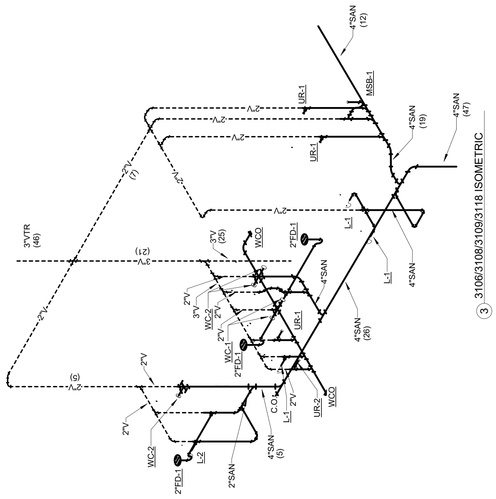

3 3106/3108/3109/3118 ISOMETRIC

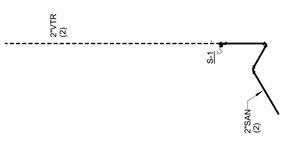

4 3126 ISOMETRIC

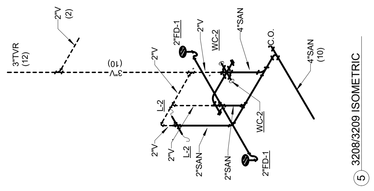

5 3208/3209 ISOMETRIC

© 2020 Brinkley Sargent Wigington Architects, Inc.

© 2020 Brinkley Sargent Wigginton Architects, Inc.

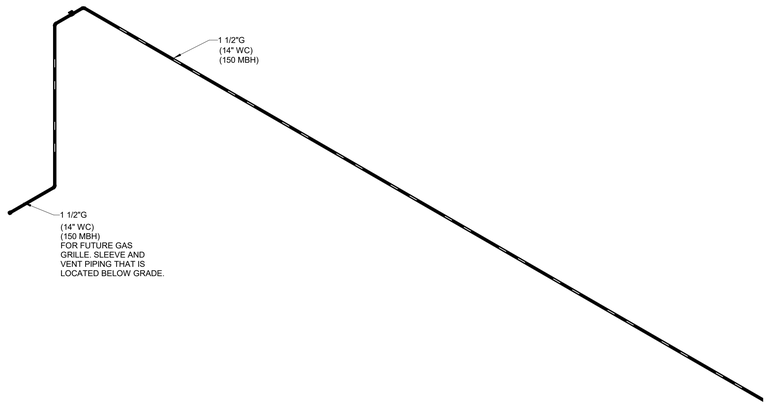

2 GAS ISOMETRIC - WEST

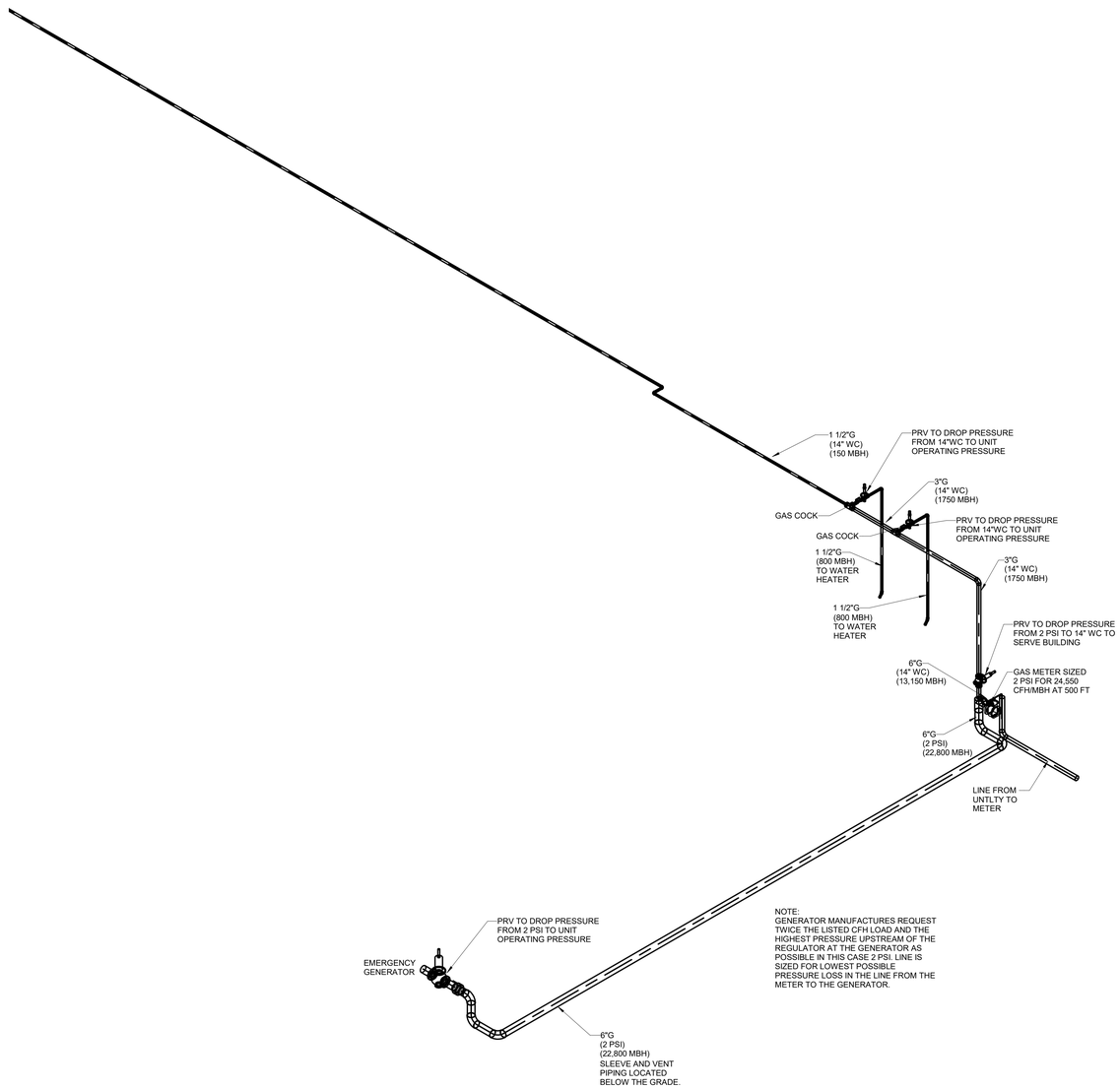

1 GAS ISOMETRIC - EAST

Architect: Brinkley Sargent Wigginton Architects (972) 960-9970
Landscape: Kendall Landscape Architecture (214) 739-3226
Structural: L.A. Fuess Partners, Inc (214) 593-1118
MEP: M-E Engineers (214) 741-1589
Civil: KSA Engineers, Inc (903) 236-7700
Technology: M-E Engineers (303) 421-6656

BRINKLEY SARGENT WIGINTON ARCHITECTS

LONGVIEW POLICE DEPARTMENT

518 W. SOUTH ST. LONGVIEW, TEXAS 75601

History		
#	Date	Description

STATE OF TEXAS
LAUREN F. BERRY
117369
LICENSED
PROFESSIONAL ENGINEER
ME Engineers, Inc.
F-10231
08/19/2020

BUILDING GAS ISOMETRICS

BID ISSUE

20513
08/19/2020
P405

8/17/2020 9:22:11 AM

C:\Revit Projects\2015\LRL_CENTRAL_P19_ceraint.rvt

© 2020 Brinkley Sargent Wigintion Architects, Inc.

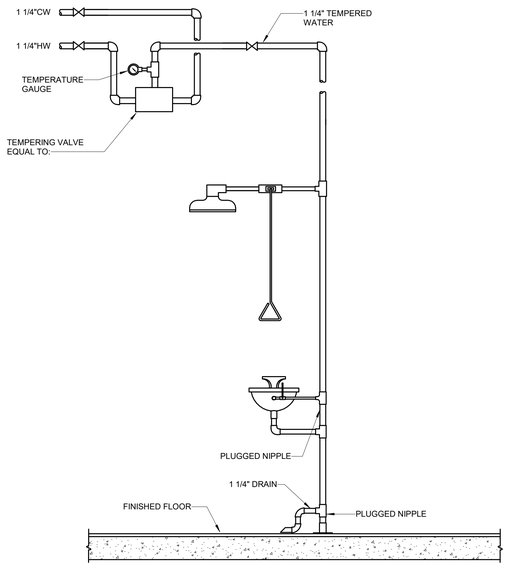

7 EMERGENCY SHOWER AND EYE WASH DETAIL
NO SCALE

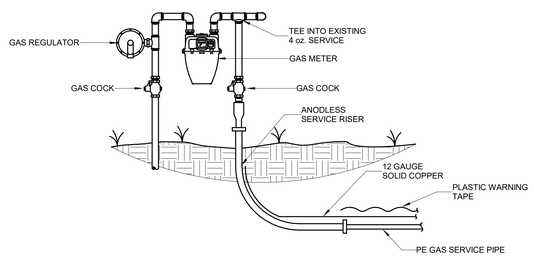

8 GAS ENTRY DETAIL
NO SCALE

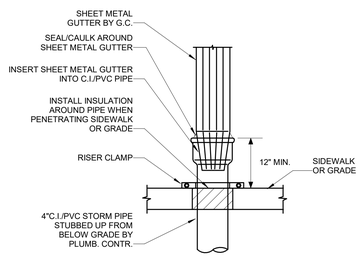

9 GUTTER/STORM PIPE DETAIL
NO SCALE

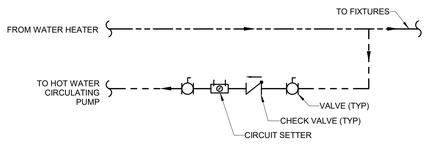

10 HOT WATER RECIRC DETAIL
NO SCALE

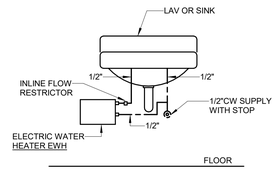

11 ELECTRIC WATER HEATER DETAIL
NO SCALE

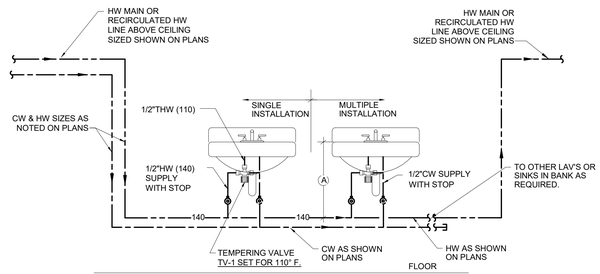

NOTES:

1. ALL WATER PIPING BEFORE STOPS SHALL BE INSTALLED IN CHASE BEHIND FIXTURES.
2. DETAIL APPLIES TO SINGLE APPLICATION ALSO. DELETE ALL FIXTURES AFTER FIRST LAV OR SINK SHOWN.
3. DISTANCE "A" FROM HOT WATER MAIN TO HOT WATER SIDE OF FAUCET TO BE NO MORE THAN 2 FEET.
4. P-TRAP AND HW SUPPLY LINES TO BE INSULATED ON ALL ADA LAVS.

5 MANUAL PUBLIC LAV TEMPERING VALVE DETAIL
NO SCALE

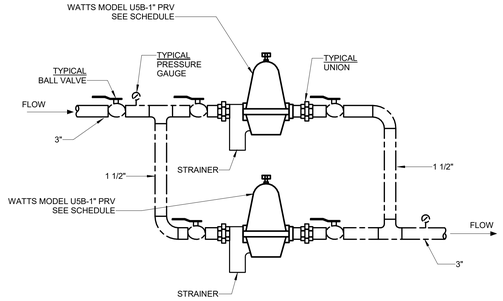

2 TYPICAL SMALL PRV STATION DETAIL
NO SCALE

1. STANCORE MODEL SE-50 SIMPLEX SUBMERSIBLE EFFLUENT PUMP.

2. STANCOR CHECK VALVE.

3. STANCOR OIL MINDER 115V 1P CONTROL SYSTEM WITH OPTIONAL BUILT-IN AUDIBLE AND VISUAL ALARM WHEN PUMP DOES NOT RUN DUE TO OIL IN PIT OR HIGH LIQUID ALARM. PROVIDE SILENCING BUTTON FOR AUDIBLE ALARM BUILT INTO PANEL. PANEL SHALL HAVE ADDITIONAL JUCTION BOX WITH CONTACT FOR A REMOTE ALARM LOCATION. PROVIDE WITH MULTI-PIN CONNECTOR AND CORD IN LENGTHS AS REQUIRED. 25 FT IS STANDARD, OPTIONAL 25 FT INCREMENTS. LIGHTS FOR OIL SPILL, POWER, HIGH LIQUID LEVEL, OVERLOAD, AND PUMP RUN.

4. JUNCTION BOX WILL BE PROVIDED WITH MULTI-PIN CONNECTOR AND CORD IN LENGTHS AS REQUIRED. 25 FT IS STANDARD, OPTIONAL 25 FT INCREMENTS AVAILABLE.

5. OIL MINDER CABLE, POWER CABLE, PROBE CABLE, HIGH LIQUID ALARM CABLE, AND PUMP ON FLOAT CABLE.

6. HIGH LIQUID ALARM FLOAT WITH CLAMP DEVICE TO MOUNT TO PUMP DISCHARGE PIPING.

7. PUMP ON FLOAT.

ITEMS 1,2,3,4,6, AND 7 PROVIDED BY STANCOR AS A STANDARD PACKAGE.

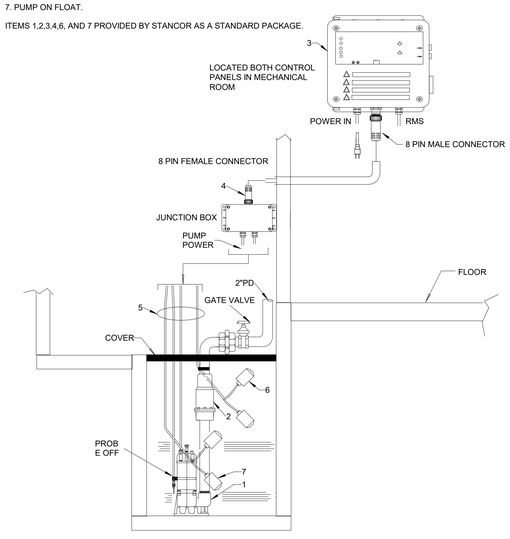

6 OIL MINDER SUMP PUMP DETAIL
NO SCALE

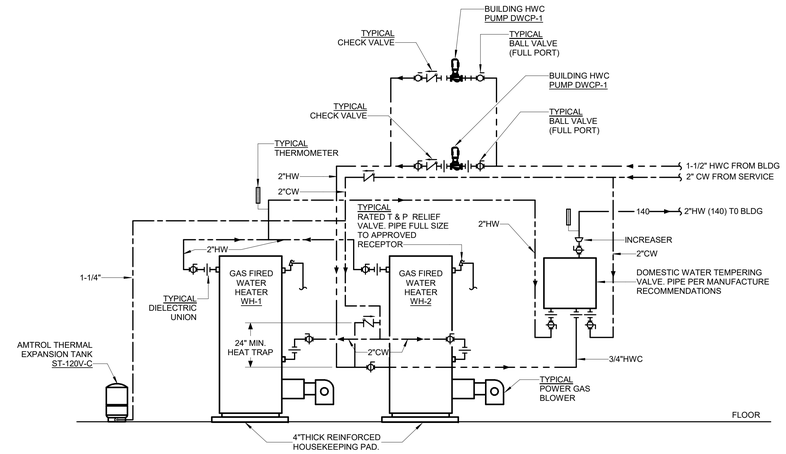

1 GAS FIRED WATER HEATERS AND TEMPERING VALVE DETAIL
NO SCALE

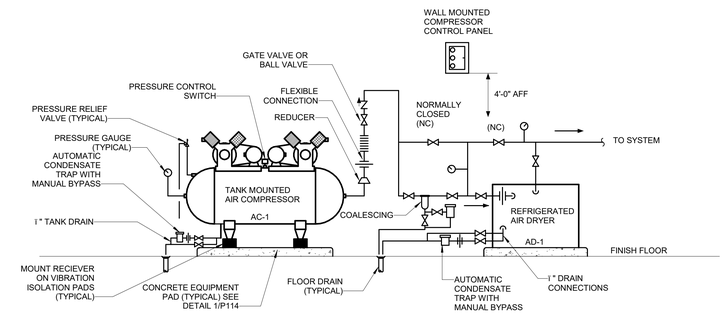

3 AIR COMPRESSOR DETAIL
NO SCALE

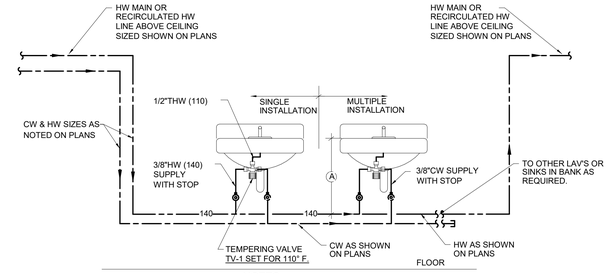

NOTES:

1. ALL WATER PIPING BEFORE STOPS SHALL BE INSTALLED IN CHASE BEHIND FIXTURES.
2. DETAIL APPLIES TO SINGLE APPLICATION ALSO. DELETE ALL FIXTURES AFTER FIRST LAV OR SINK SHOWN
3. FOR SINGLE TEMP FAUCETS WITHOUT INTEGRAL MIXING VALVES:
   DISTANCE "A" FROM HOT WATER MAIN THRU TEMPERING VALVE AND TEMPERED WATER AFTER VALVE TO BE NO MORE THAN 2 FEET TO WATER INLET OF FAUCET.

   FOR FAUCETS WITH INTEGRAL MIXING VALVES: DISTANCE "A" FROM HOT WATER MAIN TO HOT WATER INLET OF INTERGRAL MIXING VALVE TO BE NO MORE THAN 2 FEET.
4. P-TRAP AND HW SUPPLY LINES TO BE INSULATED ON ALL ADA LAVS.

4 AUTOMATIC PUBLIC LAV TEMPERING VALVE DETAIL
NO SCALE

BRINKLEY SARGENT WIGINTON ARCHITECTS

Architect: Brinkley Sargent Wigintion Architects (972) 960-9970
Landscape: Kendall Landscape Architecture (214) 739-3226
Structural: L.A. Fuess Partners, Inc (214) 593-1118
MEP: M-E Engineers (214) 741-1589
Civil: KSA Engineers, Inc (903) 236-7700
Technology: M-E Engineers (303) 421-6656

LONGVIEW POLICE DEPARTMENT

518 W. SOUTH ST. LONGVIEW, TEXAS 75601

History		
#	Date	Description

STATE OF TEXAS
LAUREN F. BERRY
117369
LICENSED PROFESSIONAL ENGINEER
ME Engineers, Inc.
F-10231
08/19/2020

PLUMBING DETAILS

20513
08/19/2020
P501

BID ISSUE

8/17/2020 9:22:14 AM

C:\Revit Projects\2019\LPD_CENTRAL_FY19_rcn.rvt

© 2020 Brinkley Sargent Wiginton Architects, Inc.

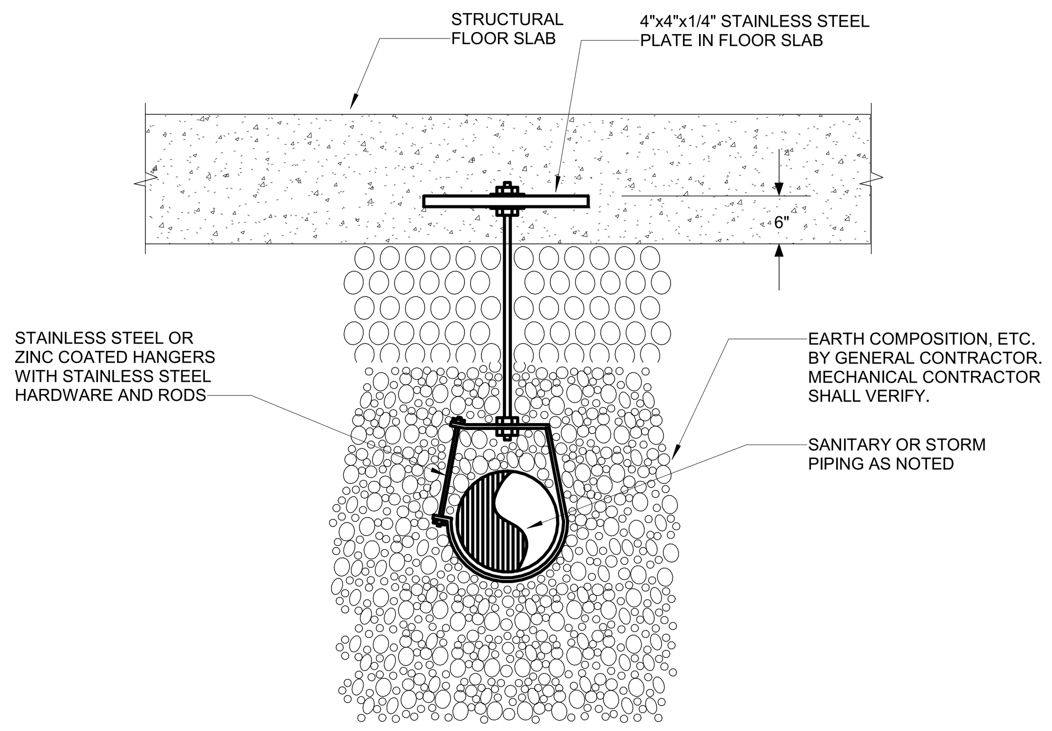

NOTES:

1. SOIL IS SUBJECT TO SETTLEMENT. PIPING MUST BE SUPPORTED FROM STRUCTURE. UNDER NO CIRCUMSTANCES CAN PIPING, UTILITIES, ETC., BE BURIED AND NOT SUPPORTED FROM ABOVE.
2. COORDINATE ALL WORK WITH STRUCTURAL DRAWINGS. SUBMITTALS MUST BE STAMPED AND APPROVED BY STRUCTURAL ENGINEER.
3. LENGTH AND SIZE OF HANGER RODS BASED ON SLOPE AND SIZE OF INSTALLED PIPING.

13 BELOW SLAB PIPING HANGER DETAIL
NO SCALE

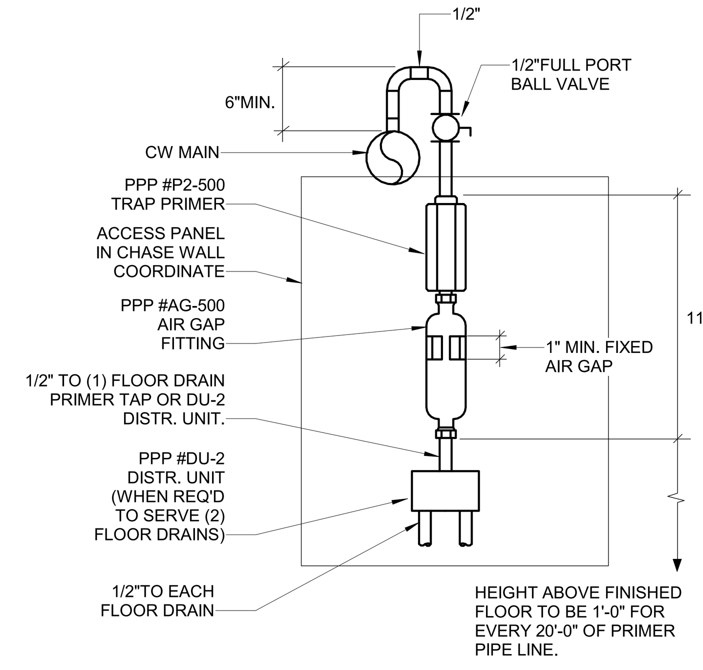

9 TRAP PRIMER DETAIL (DRAINS 6" OR LARGER)
NO SCALE

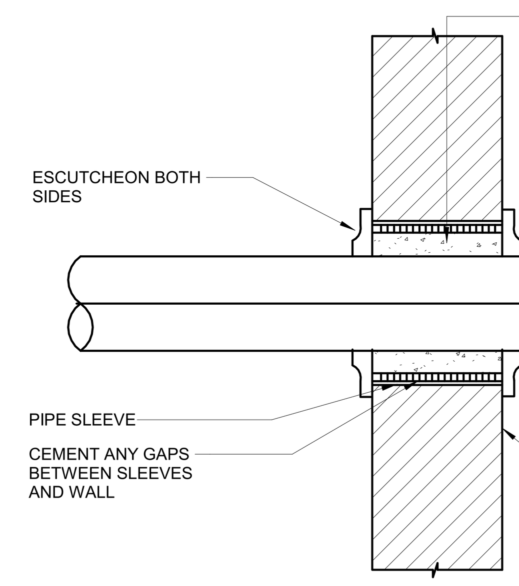

NOTE:
1. REFER TO SPECIFICATIONS ARTICLE ENTITLED "SLEEVES AND ESCUTCHEONS FOR PIPING."
2. THIS DETAIL ALSO APPLICABLE TO INTERIOR NON-WATER PROOF FLOOR CONSTRUCTION. FOR WATER PROOF FLOOR CONSTRUCTION AND OTHER FLOOR CONSTRUCTION SEE SPECIFICATIONS.

5 PIPE THRU FIRE RATED PART. & WALL DETAIL
NO SCALE

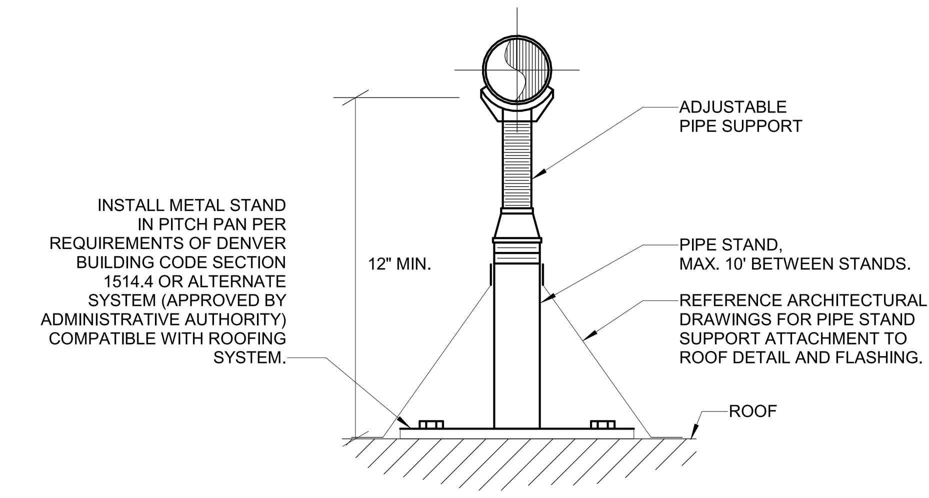

1 GAS PIPE SUPPORT ON ROOF
NO SCALE

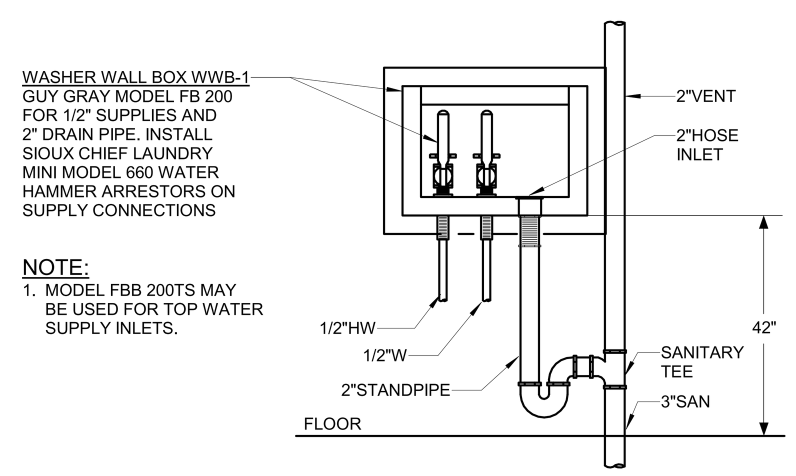

NOTE:
1. MODEL FBB 200TS MAY BE USED FOR TOP WATER SUPPLY INLETS.

10 WASHER WALL BOX DETAIL
NO SCALE

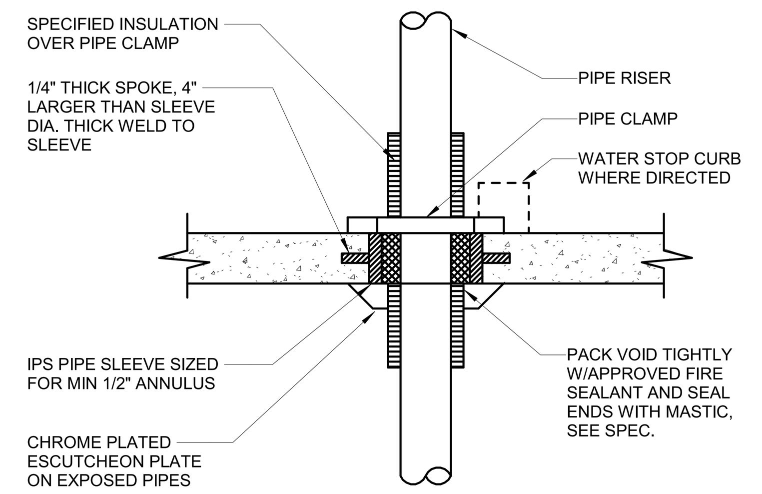

6 PIPE THRU FLOOR SLAB DETAIL
NO SCALE

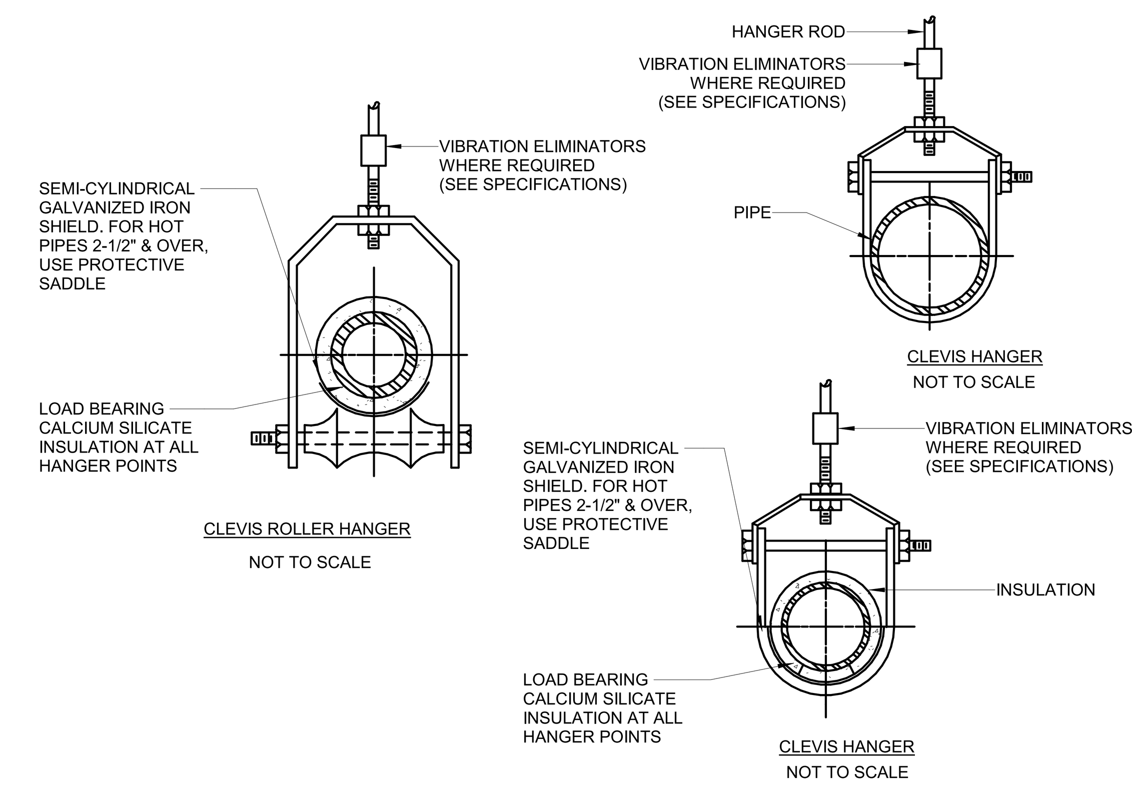

2 CLEVIS HANGER DETAIL
NO SCALE

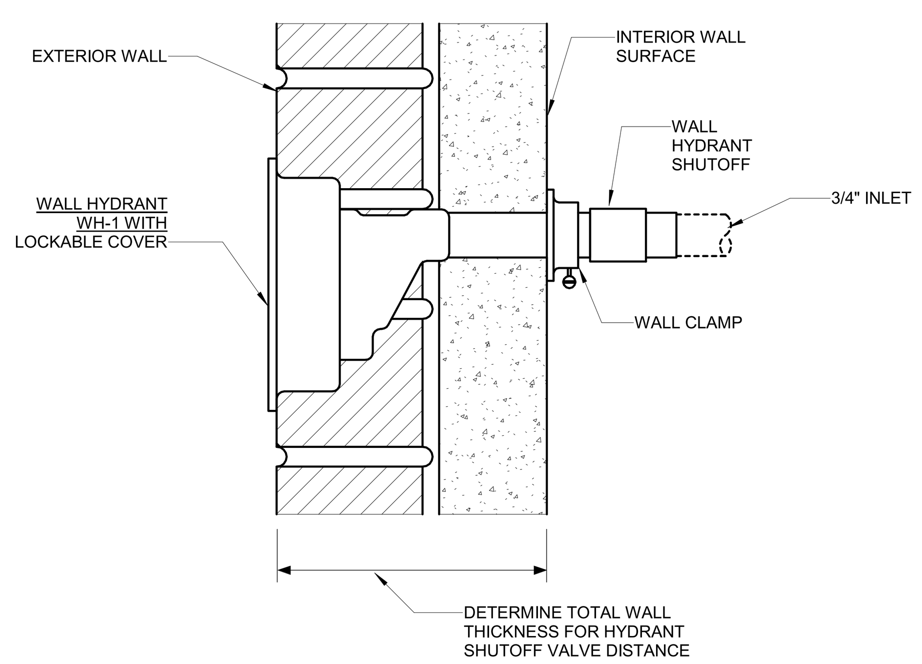

14 FREEZEPROOF WALL HYDRANT DETAIL
NO SCALE

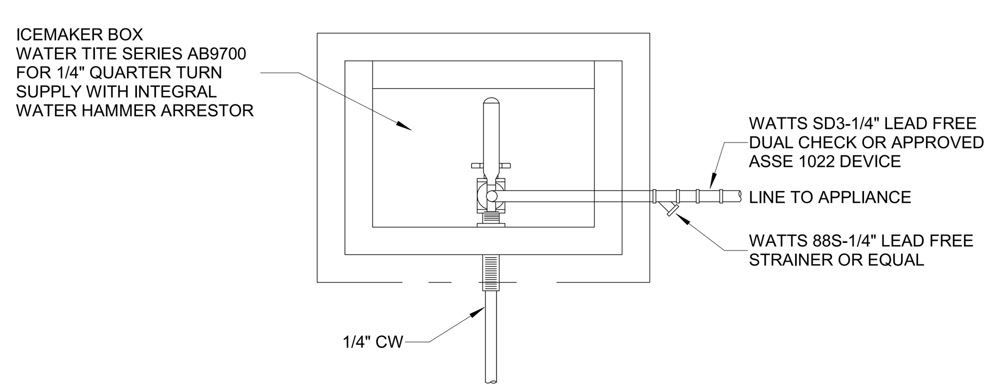

11 WATER BOX DETAIL
NO SCALE

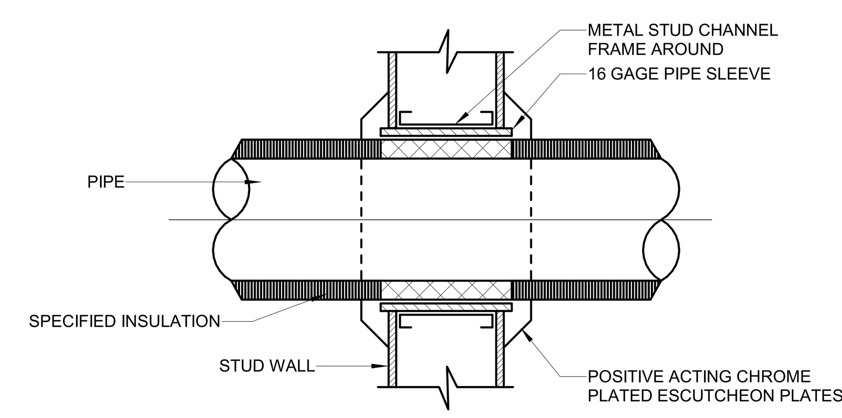

NOTE: OMIT ESCUTCHEON PLATES FOR CONCEALED PIPES.

7 PIPE THRU STUD WALL DETAIL
NO SCALE

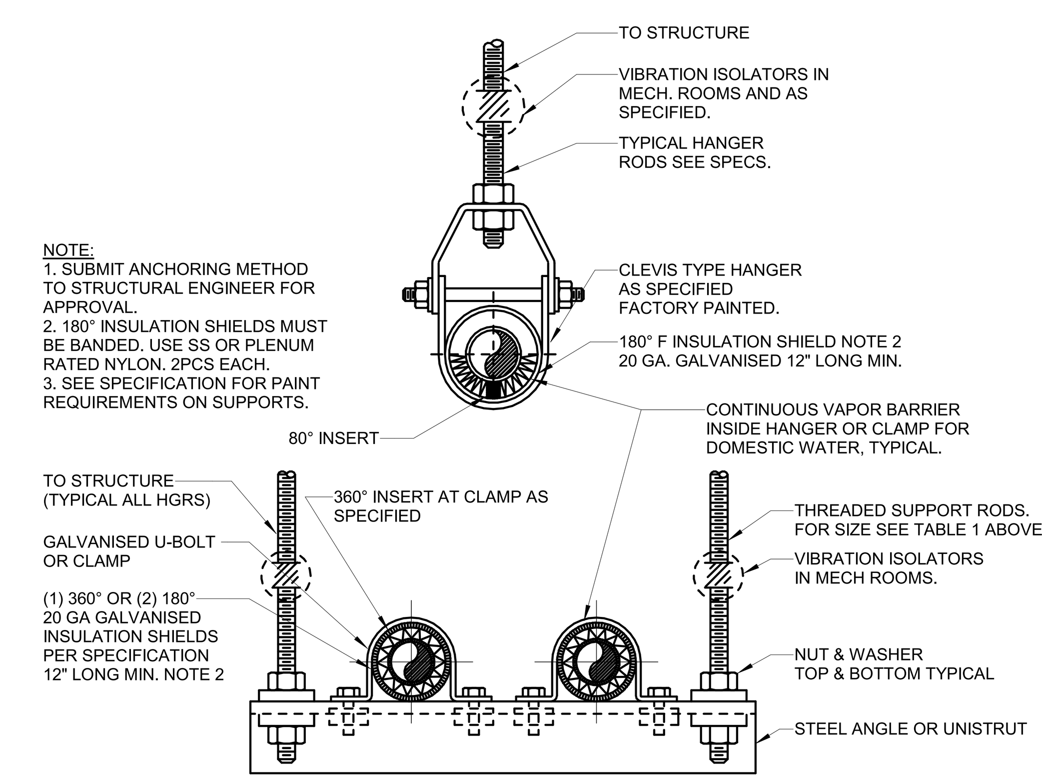

NOTE:
1. SUBMIT ANCHORING METHOD TO STRUCTURAL ENGINEER FOR APPROVAL.
2. 180° INSULATION SHIELDS MUST BE BANDED. USE SS OR PLENUM RATED NYLON. 2PCS EACH.
3. SEE SPECIFICATION FOR PAINT REQUIREMENTS ON SUPPORTS.

3 DOMESTIC PIPING HANGER DETAIL
NO SCALE

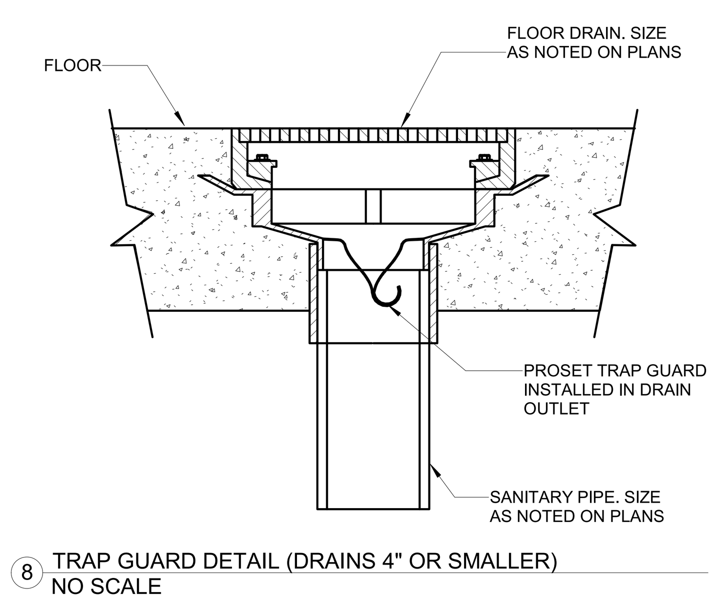

8 TRAP GUARD DETAIL (DRAINS 4" OR SMALLER)
NO SCALE

BRANCH LINES OF 20 FEET OR LESS

PLACE WATER HAMMER ARRESTOR AT THE END OF THE BRANCH LINE BETWEEN THE LAST TWO FIXTURES SERVED, AS SHOWN. SELECT REQUIRED MODEL USING FIXTURE UNIT SIZING.

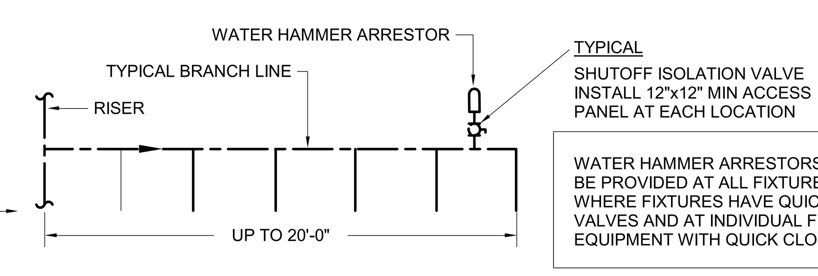

WATER HAMMER ARRESTORS SHALL BE PROVIDED AT ALL FIXTURE GROUPS WHERE FIXTURES HAVE QUICK CLOSING VALVES AND AT INDIVIDUAL FIXTURES/ EQUIPMENT WITH QUICK CLOSING VALVES

BRANCH LINES EXCEEDING 20 FEET

PLACE AN ADDITIONAL WATER HAMMER ARRESTOR AS SHOWN AT RIGHT. SELECT REQUIRED MODELS USING FIXTURE UNIT SIZING. THE SUM OF THE FIXTURE UNIT RATINGS OF UNITS X AND Y SHALL BE EQUAL TO OR GREATER THAN THE DEMAND OF THE BRANCHES.

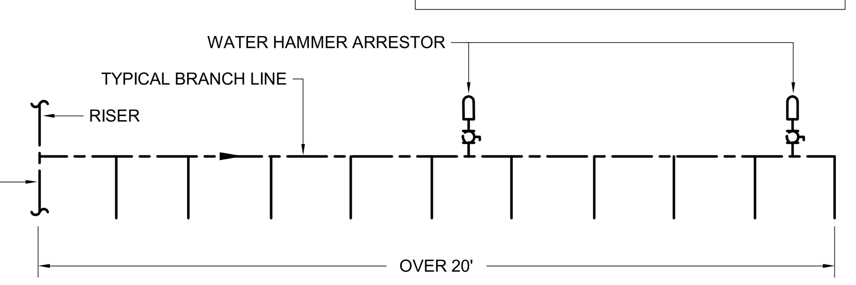

	WATER HAMMER ARRESTOR CAPACITIES			
CODE	CONN. SIZE	PDI SIZE	FIXTURE UNIT CAPACITY	CUBIC INCH VOLUME
SA-1	1/2"	A	1 TO 11	5
SA-2	3/4"	B	12 TO 32	7
SA-3	1"	C	33 TO 60	11
SA-4	1"	D	61 TO 113	20
SA-5	1"	E	114 TO 154	29
SA-6	1"	F	155 TO 330	34

NOTE: MATCH TOTAL FIXTURE UNITS OF BRANCH LINE TO CORRECT SIZE OF WATER HAMMER ARRESTOR.

P.D.I. WATER HAMMER ARRESTORS						
LENGTH OF PIPE	NOMINAL PIPE DIAMETERS					
	1/2"	3/4	1"	1-1/4"	1-1/2"	2"
25'	A	A	B	C	D	E
50'	A	B	C	D	E	F
75'	B	C	D	AE	F	EF
100'	C	D	E	F	CF	FF
125'	C	D	F	AF	EF	EFF
150'	D	E	F	DF	FF	FFF

WHEN LONG RUNS OF PIPING ARE EMPLOYED TO SERVE REMOTE EQUIPMENT, WATER HAMMER ARRESTOR SHOULD BE LOCATED AS CLOSE AS POSSIBLE TO THE POINT OF QUICK CLOSURE.

THE SIZE AND QUANTITY OF WATER HAMMER ARRESTORS TO BE INSTALLED IN BRANCH LINES IS SHOWN IN TABLE. WHEN FLOW PRESSURES OF 65 TO 85 PSIG ARE USED, THE NEXT LARGER SIZE SHOULD BE SELECTED.

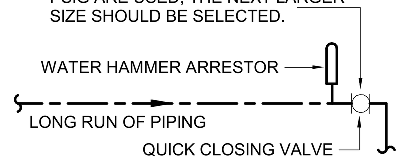

12 WATER HAMMER ARRESTOR INSTALLATION AND SIZING DETAIL
NO SCALE

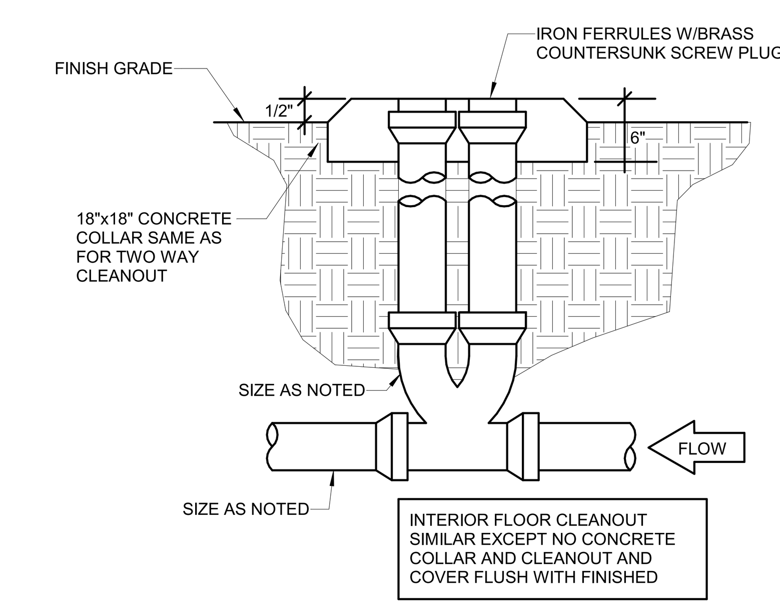

INTERIOR FLOOR CLEANOUT SIMILAR EXCEPT NO CONCRETE COLLAR AND CLEANOUT AND COVER FLUSH WITH FINISHED

4 EXTERIOR GRADE CLEANOUT
NO SCALE

BRINKLEY SARGENT WIGINTON ARCHITECTS

Architect: Brinkley Sargent Wiginton Architects (972) 960-9970
Landscape: Kendall Landscape Architecture (214) 739-3226
Structural: L.A. Fuess Partners, Inc (214) 593-1118
MEP: M-E Engineers (214) 741-1589
Civil: KSA Engineers, Inc (903) 236-7700
Technology: M-E Engineers (303) 421-6656

LONGVIEW POLICE DEPARTMENT

518 W. SOUTH ST. LONGVIEW, TEXAS 75601

History		
#	Date	Description

STATE OF TEXAS
LAUREN F. BERRY
117369
LICENSED PROFESSIONAL ENGINEER
ME Engineers, Inc.
F-10231
08/19/2020

PLUMBING DETAILS

20513
08/19/2020
P502

BID ISSUE

8/17/2020 9:22:16 AM
C:\Revit Projects\2019\LPD_CENTRAL_P19_ron.ward.rvt

© 2020 Brinkley Sargent Wiginton Architects, Inc.

SECURITY SYSTEMS SYMBOLS

	DETAIL REFERENCE	REFER TO REFERENCED DEVICE DESCRIPTION FOR ADDITIONAL REQUIREMENTS.
L:XX #CA1 X'-Y"	N/A	CAMERA TAG INDICATES CAMERA ID# ("L:XX"), CAMERA TYPE AND MOUNTING HEIGHT. REFER TO CAMERA SCHEDULE FOR ADDITIONAL INFORMATION AND DETAIL REFERENCES.
L:XX	S.01	FIXED (INTERIOR) SECURITY CAMERA. (REF: CAMERA SCHEDULES)
L:XX	S.01	PTZ (INTERIOR) SECURITY CAMERA. (REF: CAMERA SCHEDULES)
L:XX	S.01	FIXED (EXTERIOR) SECURITY CAMERA. (REF: CAMERA SCHEDULES)
L:XX	S.01	PTZ (EXTERIOR) SECURITY CAMERA. (REF: CAMERA SCHEDULES)
C XXX	S.03	CONTROLLED DOORWAY: REFER TO ACCESS CONTROL DOOR SCHEDULE. ("XXX" = ARCHITECTURAL DOOR NUMBER)
M XXX	S.03	MONITORED ONLY DOORWAY: REFER TO ACCESS CONTROL DOOR SCHEDULE. ("XXX" = ARCHITECTURAL DOOR NUMBER)
R	S.03	PROXIMITY CARD READER MOUNTED AT 48"AFF.
K	S.03	KEYPAD / CARD READER MOUNTED AT 48"AFF.
LR	S.03	LONG RANGE CARD READER MOUNTED AT HEIGHT NOTED ON DRAWINGS.
TT	S.??	TOLL TAG READER MOUNTED AT HEIGHT NOTED ON DRAWINGS.
VC	S.03	VIDEO INTERCOM CALL STATION MOUNTED AT 48" AFF.
VM F	S.??	VIDEO INTERCOM MASTER STATION FURNITURE MOUNTED
AC	S.03	AUDIO ONLY INTERCOM CALL STATION MOUNTED AT 48" AFF
X DR	S.01	DOOR RELEASE MOUNTED AT 48" AFF. X = DOOR NUMBER FOR RELEASE
D F	S.??	DURESS BUTTON FURNITURE MOUNTED.
RC	S.01	RECORD CONTROL AND INDICATION DEVICE, WALL MOUNTED @ 48" AFF, UNO
D	S.01	DURESS BUTTON MOUNTED AT 48" AFF
M	S.01	MICROPHONE MOUNTED AT 48" AFF
M	S.01	MICROPHONE FLUSH CEILING MOUNTED
CB	S.??	CEILING BOX WITH RACK FLUSH CEILING MOUNTED
	S.01	INTRUSION SYSTEM MOTION SENSOR FLUSH CEILING MOUNTED
VSS	N/A	VIDEO SURVEILLANCE HEADEND LOCATION
NVR	N/A	NETWORK VIDEO RECORDER (NVR) / VIDEO STORAGE DEVICE.
ACS	N/A	ACCESS CONTROL HEADEND LOCATION
SCP-X	N/A	SECURITY CONTROL PANEL (SCP-X) WITH APPLICABLE POWER SUPPLIES (X= PANEL NUMBER).
IDS	N/A	INTRUSION DETECTION HEADEND LOCATION
WS-A#	N/A	WORKSTATION - ACCESS CONTROL
WS-V#	N/A	WORKSTATION - VIDEO SURVEILLANCE

GENERAL NOTES:

1. REFER TO DETAILS AS INDICATED ABOVE FOR ADDITIONAL RACEWAY, CABLING AND/OR DEVICE INFORMATION.
2. REFER TO "COMMUNICATION SYSTEM SYMBOLS" LEGEND FOR STRUCTURED CABLING (DATA) REQUIREMENTS FOR IP-ENABLED DEVICES. SECURITY DETAILS AND/OR SCHEDULES DEFINE RACEWAY REQUIREMENTS, INCLUDING BUT NOT LIMITED TO BACK-BOX TYPE, SIZE, MOUNTING CONDITION AND HEIGHT.

PATHWAY REQUIREMENTS:

1. J-HOOK PATHWAY: ROUTE AND TERMINATE CONDUIT WITHIN NEAREST ACCESSIBLE CEILING SPACE. PROVIDE DEDIATED J-HOOKS AT 48-INCHES ON CENTER FOR REMAINING CABLE RUN TO NEAREST CABLE TRAY (AS APPLICABLE) OR SECURITY ROOM / TELECOM ROOM, UNLESS NOTED OTHERWISE. PROVIDE CONDUIT PATHWAY THROUGH WALLS AND ACCROSS NON-ACCESSIBLE OR EXPOSED CEILING AREAS TO ENSURE UNOBSTRUCTED CABLE PATHWAY FOR ENTIRE CABLE RUN.

COMMUNICATIONS SYSTEMS SYMBOLS

	DETAIL REFERENCE	REFER TO REFERENCED DEVICE DESCRIPTION FOR ADDITIONAL REQUIREMENTS.
"WP"	N/A	WEATHER-PROOF DEVICE COVER (TYPICAL FOR ALL DEVICES INDICATED WITH "WP").
▽ E/#	E.01	TELE/DATA OUTLET(S) FOR ELEVATOR CAB DEVICES (PHONE, CAMERA, VIDEO DISPLAY, ETC.). COORDINATE MOUNTING HEIGHT WITH ELEVATOR INTERFACE PANEL. (# = PORT QUANTITY, NO /# = 1-PORT)
▽ W	C.01 / R.01	TELE/DATA OUTLET FOR PHONE, WALL MOUNTED AT 48"AFF.
▽ #	C.02 / R.01	DATA OUTLET WALL MOUNTED AT 18"AFF U.N.O. (# = PORT QUANTITY, NO /# = 1-PORT)
▽ #	C.02 / R.01	DATA OUTLET WALL MOUNTED ABOVE COUNTER AT 9" ABOVE COUNTER OR MAXIMUM OF 45" AFF, U.N.O. (# = PORT QUANTITY, NO /# = 1-PORT)
#	C.02 / R.01	DATA OUTLET MOUNTED ABOVE ACCESSIBLE CEILING,FLUSH IN HARD CEILING, OR TIGHT TO STRUCTURE OVERHEAD (AT EXPOSED CEILING), U.N.O. (# = PORT QUANTITY, NO / # = 1-PORT)
▽ F/#	C.06 / R.04	DATA OUTLET MOUNTED IN MODULAR FURNITURE. (# = PORT QUANTITY, NO / # = 1-PORT)
▽ V/#	C.05 / R.02	DATA OUTLET FOR TV / VIDEO DISPLAY WALL MOUNTED WITHIN SHARED BACK-BOX. (# = PORT QUANTITY, NO /# = 1-PORT)
V/#	C.05 / R.02	DATA OUTLET FOR TV / VIDEO DISPLAY CEILING MOUNTED WITHIN SHARED BACK-BOX. (# = PORT QUANTITY, NO /# = 1-PORT)
▼ TV/#	C.05 / R.02	DATA / COAX OUTLET FOR TV / VIDEO DISPLAY WALL MOUNTED WITHIN SHARED BACK-BOX.
TV	C.05 / R.02	DATA / COAX OUTLET FOR TV / VIDEO DISPLAY CEILING MOUNTED WITHIN SHARED BACK-BOX.
▽ AV/#	C.03 / A.01	DATA OUTLET FOR AV DEVICE WALL MOUNTED AT 18"AFF U.N.O. (# = PORT QUANTITY, NO /# = 1-PORT)
P/#	C.02 / R.01	DATA OUTLET FOR PROJETOR MOUNTED WITH FACEPLATE FLUSH IN CEILING OR WITH BISCUIT INSIDE PLENUM BOX WHERE APPLICABLE, U.N.O. REFER TO AV DETAILS FOR ADDITIONAL INFORMATION. (# = PORT QUANTITY, NO / # = 1-PORT)
▽ WLAN/#	C.04 / R.01	WIRELESS LAN DATA OUTLET WALL MOUNTED AT 10'-0" AFF, U.N.O. (# = PORT QUANTITY, NO /# = 1-PORT)
WLAN/#	C.04 / R.01	WIRELESS LAN OUTLET MOUNTED ABOVE ACCESSIBLE CEILING, FLUSH IN HARD CEILING, OR TIGHT TO STRUCTURE OVERHEAD (AT EXPOSED CEILINGS), U.N.O. (# = PORT QUANTITY, NO / # = 1-PORT)
WLAN-E/#	W.01 / W.02	WIRELESS LAN DATA OUTLET MOUNTED WITHIN NEMA ENCLOSURE MOUNTED TO WALL OR STRUCTURE. (# = PORT QUANTITY, NO /# = 1-PORT)
▽ CAM	C.03 / S.02	DATA OUTLET FOR IP-BASED SECURITY CAMERA WALL OR POLE MOUNTED WITHIN SECURITY CAMERA BACK-BOX.
CAM	C.03 / S.02	DATA OUTLET FOR IP-BASED SECURITY CAMERA CEILING MOUNTED WITHIN SECURITY CAMERA BACK-BOX.
▽ CAM/F	C.07 / S.02	FIBER OPTIC DATA OUTLET FOR IP-BASED SECURITY CAMERA WALL OR POLE MOUNTED WITHIN SECURITY CAMERA BACK-BOX.
▽ C	C.03 / S.01	TELE/DATA OUTLET FOR INTERCOM DEVICE MOUNTED WITHIN INTERCOM BACK-BOX.
#	C.05 / R.03	DATA OUTLET MOUNTED WITHIN POWER / DATA FLOORBOX (# = PORT QUANTITY, NO /# = 1-PORT)
AV/#	C.05 / R.03	DATA OUTLET MOUNTED WITHIN POWER / DATA / AV FLOORBOX (# = PORT QUANTITY, NO /# = 1-PORT)

GENERAL NOTES:

1. REFER TO DETAILS AS INDICATED ABOVE FOR ADDITIONAL RACEWAY, CABLING AND/OR DEVICE INFORMATION.
2. REFER TO OTHER SYSTEMS DRAWINGS (AV, SECURITY, ETC.) FOR BACK-BOX REQUIREMENTS SPECIFIC TO EACH DEVICE TYPE. SELECT DEVICES MAY REQUIRE SPECIALIZED BACK-BOX TYPES, SIZES AND MOUNTING CONDITIONS AS DEPICTED IN OTHER SYSTEMS DRAWINGS.
3. PROVIDE CAT.6A (10G) UTP CABLE TERMINATED (PER EIA/TIA-T568B) ON CAT.6A OUTLETS AND/OR PATCH PANELS FOR ALL TELE/DATA DEVICES, U.N.O.
4. RG-6 COAXIAL CABLE TERMINATED WITH F-TYPE CONNECTORS FOR COAXIAL DEVICES.

PATHWAY REQUIREMENTS:

1. J-HOOK PATHWAY: ROUTE AND TERMINATE CONDUIT WITHIN NEAREST ACCESSIBLE CEILING SPACE. PROVIDE DEDIATED J-HOOKS AT 48-INCHES ON CENTER FOR REMAINING CABLE RUN TO NEAREST CABLE TRAY (AS APPLICABLE) OR TELECOM ROOM / HORIZONTAL CROSS-CONNECT LOCATION, UNLESS NOTED OTHERWISE. PROVIDE CONDUIT PATHWAY THROUGH WALLS AND ACCROSS NON-ACCESSIBLE OR EXPOSED CEILING AREAS TO ENSURE UNOBSTRUCTED CABLE PATHWAY FOR ENTIRE CABLE RUN.

CROSS-CONNECTS

	DETAIL REFERENCE	REFER TO REFERENCED DEVICE DESCRIPTION FOR ADDITIONAL REQUIREMENTS.
SP	N/A	TELECOMMUNICATIONS SERVICE PROVIDER CROSS-CONNECT (SP) PROVIDED BY OTHERS. (SHOWN FOR REFERENCE ONLY)
MC	C.12	TELECOMMUNICATIONS MAIN CROSS-CONNECT (MC).
IC	C.12	TELECOMMUNICATIONS INTERMEDIATE CROSS-CONNECT (IC).
HC	C.12	TELECOMMUNICATIONS HORIZONTAL CROSS-CONNECT (HC).
SP	C.11	FIBER OPTIC DATA SERVICE PROVIDER CROSS-CONNECT (SP) PROVIDED BY OTHERS, (SHOWN FOR REFERENCE ONLY).
MC	C.11	FIBER OPTIC DATA MAIN CROSS-CONNECT (MC).
IC	C.11	FIBER OPTIC DATA INTERMEDIATE CROSS-CONNECT (IC).
HC	C.13	DATA HORIZONTAL CROSS-CONNECT (HC).
TV	N/A	CABLE OR SAT TV CROSS-CONNECT.
ST	C.12	TELECOMMUNICATIONS SERVICE TIE CROSS-CONNECT.
ST	C.11	FIBER OPTIC SERVICE TIE CROSS-CONNECT.

INFRASTRUCTURE

	DETAIL REFERENCE	REFER TO REFERENCED DEVICE DESCRIPTION FOR ADDITIONAL REQUIREMENTS.
	R.03	TELE/DATA FURNITURE FEED FLOOR BOX (WITH COVER PLATE AND FLEXIBLE WHIP)
	R.04	TELE/DATA FURNITURE FEED WALL BACK-BOX (WITH COVER PLATE AND FLEXIBLE WHIP) MOUNTED AT 18" AFF.
J	R.01	RACEWAY ONLY OUTLET LOCATION MOUNTED AT 18"AFF, U.N.O.
J	R.01	RACEWAY ONLY OUTLET LOCATION MOUNTED ABOVE ACCESSIBLE CEILING, FLUSH IN HARD CEILING, OR TIGHT TO STRUCTURE OVERHEAD (AT EXPOSED CEILINGS), U.N.O.
TMGB	G.01	MAIN TELECOMMUNICATIONS GROUND BUS.
TGB	G.02	TELECOMMUNICATIONS GROUND BUS.
	N/A	4-POST EQUIPMENT RACK. (REF: RACK / CABINET SCHEDULES)
	N/A	EQUIPMENT CABINET. (REF: RACK / CABINET SCHEDULES)
	N/A	WALL MOUNTED SWING OUT EQUIPMENT RACK. (REF: RACK / CABINET SCHEDULES)
	N/A	EQUIPMENT RACK OR CABINET PROVIDED BY OTHERS. SHOWN FOR REFERENCE TO ALLOCATE FLOOR SPACE.
HH	U.03	COMMUNICATIONS IN-GRADE HAND HOLE / PULL-BOX.

CABLE TRAY

SYMBOL	DETAIL REFERENCE:	TRAY TYPE:
R	T.01	LADDER RACK / WIRE RUNWAY
	DETAIL REFERENCE:	REFER TO REFERENCED DEVICE DETAIL FOR ADDITIONAL REQUIREMENTS.
	CABLE TRAY AS NOTED ON PLAN DRAWINGS.	

GENERAL NOTES:

1. ALL CABLE TRAY MOUNTING HEIGHTS INDICATED ON FLOOR PLANS ARE TO THE BOTTOM OF CABLE TRAY SUPPORTS (UNI-STRUT).
2. REFER TO ALL CABLE TRAY DETAILS FOR ADDITIONAL REQUIREMENTS
3. SEISMIC BRACING FOR ALL CABLE TRAY(S) SHALL BE PROVIDED AS REQUIRED BY CODE, LOCAL GOVERNING JURISDICTION(S), AND CABLE TRAY MANUFACTURER SPECIFICATIONS.

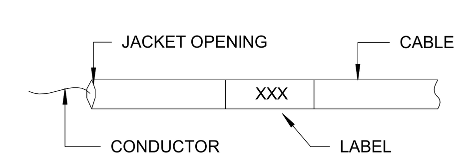

COMMUNICATION CABLE

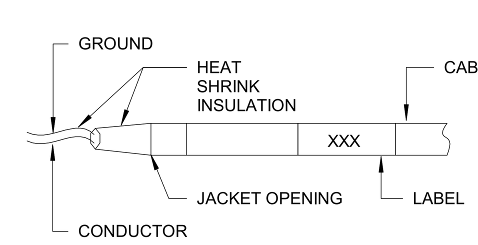

AUDIOVISUAL / SECURITY SYSTEMS CABLE

GENERAL NOTES:

1. CABLES: ALL SYSTEM CABLES OUTSIDE OF CONDUIT SHALL BE SUPPORTED WITHIN CEILING SPACES, UNDER FLOORS SPACES, ALONG WALLS, AND WITHIN EQUIPMENT RACKS PER SPECIFICATIONS.
2. CABLE DRESSING: ALL CABLES SHALL BE INSTALLED PER INFORMATION SHOWN HERE AND WITHIN SPECIFICATIONS. ALL CABLE NOT MEETING REQUIREMENTS HEREIN WILL BE REDRESSED AND / OR REPLACED AS NECESSARY.
3. LABELS: PROVIDE THERMAL TRANSFER / SELF-LAMINATING TYPE LABELS LOCATED ~2 INCHES FROM EACH END OF TERMINATED CABLE. HAND WRITTEN LABELS WILL NOT BE ACCEPTED.
4. HEAT SHRINK: PROVIDE HEAT SHRINK AT EACH EACH END OF TERMINATED CABLE FOR ALL AUDIOVISUAL / SECURITY / NURSE CALL CABLES. TAPE (ELECTRICAL OR OTHERWISE) UTILIZED IN PLACE OF HEAT SHRINK SHALL NOT BE ACCEPTED.
5. GROUND CONDUCTOR: PROVIDE CLEAR HEAT SHINK FOR ALL TERMINATED GROUND CONDUCTORS. FOR ALL UN-TERMINATED GROUND CONDUCTORS, CUT BACK TO JACKET OPENING AND COVER WITH HEAT SHRINK.

CABLE DRESS REQUIREMENTS

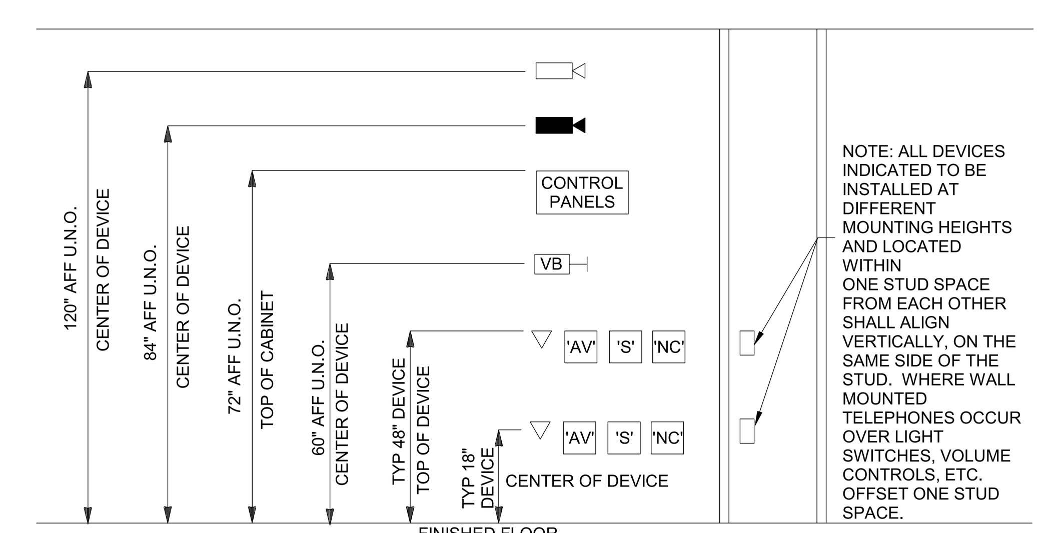

TYPICAL DEVICE MOUNTING HEIGHTS

NO SCALE

NOTES:

1. MOUNTING HEIGHTS SHOWN ON ARCHITECTURAL ELEVATIONS SHALL GOVERN OVER THOSE SHOWN ABOVE
2. CONTRACTOR SHALL ENSURE THAT ALL MOUNTING HEIGHTS COMPLY WITH CURRENT ADA REQUIREMENTS.
3. ALL ABOVE COUNTER DEVICES SHALL BE MOUNTED 9" ABOVE COUNTER OR A MAXIMUM OF 45" AFF (TO TOP OF DEVICE). VERIFY HEIGHTS WITH ARCHITECT.
4. WHERE EVER DEVICES ARE INDICATED TO BE ABOVE DOORS, DEVICE SHALL BE CENTERED BETWEEN TOP OF DOOR TRIM AND CEILING LINE.

BRINKLEY SARGENT WIGINTON ARCHITECTS

Architect: Brinkley Sargent Wiginton Architects (972) 960-9970
Landscape: Kendall Landscape Architecture (214) 739-3226
Structural: L.A. Fuess Partners, Inc (214) 593-1118
MEP: M-E Engineers (214) 741-1589
Civil: KSA Engineers, Inc (903) 236-7700
Technology: M-E Engineers (303) 421-6656

LONGVIEW POLICE DEPARTMENT

XXXX SOUTH ST. LONGVIEW, TEXAS 75601

History		
#	Date	Description

STATE OF TEXAS — ANDREW SHIVLEY — 109010 — LICENSED PROFESSIONAL ENGINEER
ME Engineers, Inc.
F-10231
08/19/2020

TECHNOLOGY LEGEND AND NOTES

BID ISSUE

20513
08/19/2020
T001

8/17/2020 2:29:01 PM
C:\Revit Projects\2019\LPD_CENTRAL_T19_Steven.Maxwell@me-engineers.com.rvt

© 2020 Brinkley Sargent Wigginton Architects, Inc.

ABBREVIATIONS

AC	ALTERNATING CURRENT
ADA	AMERICANS WITH DISABILITIES ACT
AFF	ABOVE FINISHED FLOOR
AFG	ABOVE FINISHED GRADE
AHU	AIR HANDLING UNIT
ALD	ASSISTED LISTENING DEVICE
ALPETH	ALUMINUM POLYETHYLENE
ALS	ASSISTED LISTENING SYSTEM
ALT	ALTERNATE
AMP, A	AMPERE
ANSI	AMERICAN NATIONAL STANDARDS INSTITUTE
ANT	ANTENNA
ATSC	ADVANCED TELEVSION SYSTEMS COMMITTEE (DIGITAL TELEVISION SIGNAL)
AUX	AUXILIARY
AUDIO	MICROPHONE OR LINE LEVEL BALANCED SIGNAL
AV	AUDIO VIDEO
AWG	AMERICAN WIRE GAUGE
BAS	BUILDING AUTOMATION SYSTEM
BFC	BELOW FINISHED CEILING
BFG	BELOW FINISHED GRADE
BICSI	BUILDING INDUSTRY CONSULTING SERVICES INTERNATIONAL
BMS	BUILDING MANAGEMENT SYSTEM
BRI	BASIC RATE INTERFACE (ISDN)
C	CONDUIT
CATV	COMMUNITY ANTENNA TV (CABLE TV)
CC	CONTACT CLOSURE
CMP	COMMUNICATIONS PLENUM CABLE
CMR	COMMUNICATIONS RISER CABLE
CO	CENTRAL OFFICE
COAX	COAXIAL
CODEC	CODER / DECODER
CSI	CONSTRUCTION SPECIFICATIONS INSTITUTE
DAS	DISTRIBUTED ANTENNA SYSTEM
DB	DECIBEL
DC	DIRECT CURRENT
DEMARC	DEMARCATION
DISC	DISCONNECT
DM	DIGITAL MEDIA SIGNAL
DMP	DIGITAL MEDIA PLAYER
DP	DISPLAYPORT
DSL	DIGITAL SUBSCRIBER LINE
DSP	DIGITAL SIGNAL PROCESSOR
DSS	DIGITAL SATELLITE SIGNAL
DVI-D	DIGITAL VISUAL INTERFACE-DIGITAL
DVI-I	DIGITAL VISUAL INTERFACE-INTEGRATED
DWG	DRAWING
EBC	EQUIPMENT BONDING CONDUCTOR
EIA	ELECTRONICS INDUSTRY ALLIANCE
ELEC	ELECTRIC OR ELECTRICAL
ELEV	ELEVATOR
EMC	ELECTROMAGNETIC COMPATIBILITY
EMI	ELECTROMAGNETIC INTERFERENCE
EMT	ELECTRIC METALLIC TUBING
ENG	ELECTRONIC NEWS GATHERING
EX	EXISTING
FA	FIRE ALARM
FAA	FEDERAL AVIATION ADMINISTRATION
FACP	FIRE ALARM CONTROL PANEL
FLEX	FLEXIBLE
FM	FREQUENCY MODULATION
FO	FIBER OPTIC
FP	FLAT PANEL (VIDEO DISPLAY)
FTP	FILE TRANSFER PROTOCOL
GA	GAUGE
GALV	GALVANIZED
GB	GIGABYTE
GbPS	GIGABITS PER SECOND
GC	GENERAL CONTRACTOR
GEN	GENERATOR
GFCI	GROUND FAULT CIRCUIT INTERRUPTER

ABBREVIATIONS

GHz	GIGAHERTZ
GMP	GUARANTEED MAXIMUM PRICE
GUI	GRAPHICAL USER INTERFACE
HC	HORIZONTAL CROSS-CONNECT
HD	HIGH DEFINITION
HDMI	HIGH DEFINITION MULTIMEDIA INTERFACE
HVAC	HEATING, VENTILATING, AND AIR-CONDITIONING
Hz	HERTZ
IC	INTERMEDIATE CROSS-CONNECT
ID	INSIDE DIAMETER
IDF	INTERMEDIATE DISTRIBUTION FRAME
IEC	INTERNATIONAL ELECTROTECHNICAL COMMISSION
IEEE	INSTITUTE OF ELECTRICAL AND ELECTRONICS ENGINEERS, INC.
IF	INTERFACE
IG	ISOLATED GROUND
IMC	INTERMEDIATE GRADE METALLIC CONDUIT
IP	INTERNET PROTOCOL (ETHERNET)
IR	INFRARED SIGNAL
ISDN	INTEGRATED SERVICES DIGITAL NETWORK
ISO	INTERNATIONAL ORGANIZATION OF STANDARDS
J-BOX	JUNCTION BOX
kb	KILOBIT
kbps	KILOBIT PER SECOND
kcmil	THOUSANDS OF CIRCULAR MILLS
kHz	KILOHERTZ
km	KILOMETER
kVA	KILOVOLT AMPERES
kW	KILOWATT
kWh	KILOWATT-HOURS
LAN	LOCAL AREA NETWORK
LED	LIGHT-EMITTING DIODE
LEC	LOCAL EXCHANGE CARRIER (OR SP)
LFC	LIQUID TIGHT FLEXIBLE CONDUIT
LUMEN	LUMINOUS FLUX (PROJECTOR BRIGHTNESS)
LV	LOW VOLTAGE
LVC	LOW VOLTAGE CONTROL INTERFACE
M	METER
mA	MILLIAMPERE
MAG	MAGNETIC
MB	MEGABYTE
Mbps	MEGABITS PER SECOND
MC	MAIN CROSS-CONNECT
MDF	MAIN DISTRIBUTION FRAME
MECH	MECHANICAL
MFR	MANUFACTURER
MHz	MEGAHERTZ
mm	MILLIMETER
MMFO	MULTI-MODE FIBER OPTIC
MNS	MASS NOTIFICATION SYSTEM
MPOE	MAIN POINT OF ENTRY
MPOP	MINIMUM POINT OF PRESENCE
MTR	MAIN TELECOM ROOM
NEC	NATIONAL ELECTRIC CODE
NEMA	NATIONAL ELECTRICAL MANUFACTURERS ASSOCIATION
NFPA	NATIONAL FIRE PROTECTION ASSOCIATION
NIC	NETWORK INTERFACE CARD
NID	NETWORK INTERFACE DEVICE
NIT	1 CANDELA PER SQUARE METER (FLAT PANEL BRIGHTNESS)
nm	NANOMETER
NTS	NOT TO SCALE
OC	ON CENTER
OD	OUTSIDE DIAMETER
OEM	ORIGINAL EQUIPMENT MANUFACTURER
OFE	OWNER FURNISHED EQUIPMENT
OS	OPERATING SYSTEM
OSHA	OCCUPATIONAL SAFETY AND HEALTH ADMINISTRATION
OSP	OUTSIDE PLANT
OTDR	OPTICAL TIME DOMAIN REFLECTOMETER

ABBREVIATIONS

PA	PUBLIC ADDRESS
PABX	PRIVATE AUTOMATIC BRANCH EXCHANGE
PBX	PRIVATE BRANCH EXCHANGE
PCI	PAYMENT CARD INDUSTRY
PE	POLYETHYLENE
PH	PHASE
POTS	PLAIN OLD TELEPHONE SERVICE
PR	PAIRS
PRI	PRIMARY RATE INTERFACE (ISDN)
PSTN	PUBLIC SWITCHED TELEPHONE NETWORK
PROX	PROXIMITY
PTZ	PAN TILT ZOOM CAMERA
PVC	POLYVINYL CHLORIDE
PWR	POWER
RCDD	REGISTERED COMMUNICATIONS DISTRIBUTION DESIGNER
RF	RADIO FREQUENCY SIGNAL
RGBHV	HIGH RESOLUTION ANALOG VIDEO
RGS	RIGID GALVANIZED STEEL
RH	RELATIVE HUMIDITY
RMC	RIGID METALLIC CONDUIT
RNC	RIGID NON-METALLIC CABLE
RS-232	BI-DIRECTIONAL CONTROL DATA STREAM (RS-232/RS-422/RS485)
RX	RECEIVE
SMFO	SINGLE-MODE FIBER OPTIC
SMPOE	SECONDARY MAIN POINT OF ENTRY
SP	SERVICE PROVIDER
SPEAKER	SPEAKER LEVEL SIGNAL
SPL	SOUND PRESSURE LEVEL
STEREO	A BALANCED 2 CHANNEL AUDIO SIGNAL
STI-PA	SPEECH INTELLIGIBILITY INDEX - PUBLIC ADDRESS
STP	SHIELDED TWISTED PAIR
SW	SWITCH
TBB	TELECOMMUNICATIONS BONDING BACKBONE
TCP	TRANSMISSION CONTROL PROTOCOL
TCP/IP	TRANSMISSION CONTROL PROTOCOL WITH INTERNET PROTOCOL
TDD	TELECOMMUNICATIONS DEVICE FOR THE DEAF
TDR	TIME DOMAIN REFLECTOMETER
TDR	TELECOM DEMARC ROOM
TEL	TELEPHONE
TELCO	TELEPHONE COMPANY (SP)
TGB	TELECOMMUNICATIONS GROUND BUS BAR
TIA	TELECOMMUNICATIONS INDUSTRY ASSOCIATION
TMGB	TELECOMMUNICATIONS MAIN GROUND BUS BAR
TP	TOUCH PANEL (CONTROL SYSTEM)
TR	TELECOMMUNICATIONS ROOM
TTB	TELEPHONE TERMINAL BOARD
TVSS	TRANSIENT VOLTAGE SURGE SUPPRESSION
UBS	UNIFORM BUILDING CODE
UC	UNDER COUNTER
UG	UNDERGROUND
UNO	UNLESS NOTED OTHERWISE
UPS	UNINTERRUPTIBLE POWER SUPPLY
USB	UNIVERSAL SERIAL BUS
UTP	UNSHIELDED TWISTED PAIR
V	VOLTAGE
VC	VOLUME CONTROL
VGA	VIDEO GRAPHIC ARRAY (ANALOG COMPUTER SIGNAL, SEE ALSO RGBHV)
VM	VOLTMETER
VTC	VIDEO TELECONFERENCE SYSTEM
W	WATT
WAN	WIDE AREA NETWORK
WATS	WIDE AREA TELECOMMUNICATIONS SERVICE
WLAN	WIRELESS LOCAL AREA NETWORK (WIFI)
WM	WIRELESS MICROPHONE
WP	WEATHER PROOF
WT	WATERTIGHT
XFMR	TRANSFORMER
XP	EXPLOSION PROOF

GENERAL TECHNOLOGY SYSTEM REQUIREMENTS:

1. HEIGHTS SHOWN ARE TYPICAL TO CENTERLINE OF BOX UNLESS NOTED OTHERWISE. ALL DEVICE OUTLETS SHALL BE MOUNTED VERTICALLY.
2. MOUNTING HEIGHTS SHOWN ON ARCHITECTURAL ELEVATIONS SHALL GOVERN OVER THOSE SHOWN ABOVE.
3. ALL DEVICES INDICATED TO BE INSTALLED AT DIFFERENT MOUNTING HEIGHTS AND LOCATED WITHIN ONE STUD SPACE FROM EACH OTHER SHALL ALIGN VERTICALLY, ON THE SAME SIDE OF THE STUD. WHERE WALL MOUNTED TELEPHONES OCCUR OVER LIGHT SWITCHES, VOLUME CONTROLS, ETC. OFFSET ONE STUD SPACE.
4. ALL EXPOSED RACEWAYS SHALL BE INSTALLED PARALLEL OR PERPENDICULAR TO WALLS OR STRUCTURAL MEMBERS SUCH THAT THEY FOLLOW STRUCTURAL SURFACE CONTOURS AND SHALL BE INSTALLED SUCH THAT THEY DO NOT OBSTRUCT PASSAGEWAYS. MULTIPLE RACEWAYS SHOULD BE INSTALLED GROUPED TOGETHER. THE LOCATION OF THESE RACEWAYS SHALL BE APPROVED BY THE ARCHITECT PRIOR TO INSTALLATION. (EXTRA TIME SHOULD BE ALLOWED FOR THIS REVIEW AND APPROVAL).
5. ALL BACK BOXES SHALL BE FLUSH MOUNTED UNLESS OTHERWISE NOTED. CONTRACTOR SHALL COORDINATE INSTALLATION OF CONDUIT AND BACK BOXES IN POURED CONCRETE, MASONRY, AND GYP WALLS.
6. DATA GIVEN ON THE DRAWINGS IS AS EXACT AS COULD BE SECURED. ABSOLUTE ACCURACY IS NOT GUARANTEED AND THE CONTRACTOR SHALL OBTAIN AND VERIFY EXACT LOCATIONS, MEASUREMENTS,LEVELS,SPACE REQUIREMENTS, POTENTIAL CONFLICTS WITH OTHER TRADES,ETC. AT THE SITE AND SHALL SATISFACTORILY ADAPT HIS WORK TO ACTUAL CONDITIONS AT THE BUILDINGS.THE DRAWINGS ARE DIAGRAMMATICAL IN NATURE AND SHALL NOT BE SCALED.HOWEVER THIS DOES NOT RELIEVE ANY SUB-CONTRACTOR FROM COORDINATING HIS WORK WITH ALL OTHER TRADES AND FROM ADJUSTING HIS WORK AS REQUIRED BY THE ACTUAL CONDITIONS OF THE PROJECT.THE CONTRACTOR SHALL VISIT THE SITE BEFORE SUBMITTING A BID TO BECOME THOROUGHLY FAMILIAR WITH THE ACTUAL CONDITIONS OF THE PROJECT.
7. COORDINATE AND ADJUST ALL WORK BETWEEN TRADES AND EXISTING CONDITIONS IN ORDER TO ACCOMPLISH A NEAT, INTEGRATED AND EFFICIENT INSTALLATION WHICH INCLUDE BUT IS NOT LIMITED TO:
   A. EXAMINE THE CONTRACT DOCUMENTS OF ALL TRADES (IE. THE ARCHITECTURAL REFLECTED CEILING PLAN, MECHANICAL HVAC DRAWINGS, ELECTRICAL LIGHTING PLAN, TECHNOLOGY LAN, FIRE PROTECTION PLAN, ETC.)
   B. COORDINATE NECESSARY EQUIPMENT, FIXTURES, ETC. SO THAT THE FINAL INSTALLATION IS COMPATIBLE WITH THE MATERIALS AND EQUIPMENT OF THE OTHER TRADES,
   C. THIS CONTRACTOR SHALL ASSIST THE DIVISION 21, 22, & 23 CONTRACTOR IN PREPARING SHOP DRAWINGS FOR COORDINATING INSTALLATION OF ALL WORK (IE. LOCATING ALL CEILING CLEARANCES,CABLE TRAY, CLEARANCES THROUGHOUT, ETC.).
8. DEFINITIONS:

A. "FURNISH" MEANS TO "SUPPLY" AND USUALLY REFERS TO AN ITEM OF EQUIPMENT.

B. "INSTALL" MEANS TO "SET IN PLACE, CONNECT AND PLACE IN FULL OPERATIONAL ORDER".

C. "PROVIDE" MEANS TO "FURNISH AND INSTALL".

D. "EQUIVALENT"MEANS"MEETS THE SPECIFICATIONS OF THE REFERENCE PRODUCT OR ITEM IN ALL SIGNIFICANT ASPECTS."SIGNIFICANT ASPECTS SHALL BE DETERMINED BY THE ENGINEER.

E. "WORK BY OTHER(S)/CONTRACTOR)" "RE:DIVISION XX",AND SIMILAR EXPRESSIONS MEANS WORK TO BE PERFORMED UNDER THE CONTRACT DOCUMENTS, BUT NOT NECESSARILY UNDER THE DIVISION OR SECTION OF THE WORK ON WHICH THE NOTE APPEARS. IT IS THE CONTRACTORS SOLE RESPONSIBILITY TO COORDINATE THE WORK OF THE CONTRACT BETWEEN HIS/HER SUPPLIERS, SUBCONTRACTORS, AND EMPLOYEES. IF CLARIFICATION IS REQUIRED, CONSULT ARCHITECT BEFORE SUBMITTING BID.

9. FUTURE WORK:

A. THE DRAWINGS AND SPECIFICATIONS MAY INDICATE SOME WORK WHICH IS TO BE PROVIDED UNDER THIS SCOPE OF WORK BUT WHOSE TIMING MAY BE DIFFERENT THAN THE REST OF THE WORK.THIS WORK GENERALLY FACILITATES THE INSTALLATION OF "TENANT FINISH" WORK OR FOOD SERVICE WORK. IT IS WITHIN THIS DIVISION'S SCOPE OF WORK TO COORDINATE THIS WORK WITH THE WORK OF THE CONTRACTOR PROVIDING THE FUTURE SCOPE OF WORK.

10. "FIRE STOPPING"REQUIREMENT.ALL PENETRATIONS THROUGH RATED WALLS AND FLOORS AND CONDUIT/SLEEVE OPENINGS SHALL BE SEALED WITH MATERIAL CAPABLE OF PREVENTING THE PASSAGE OF FLAMES, HOT GASSES AND SMOKE WHEN SUBJECTED TO THE REQUIREMENTS OF THE TEST STANDARD SPECIFIC FOR ALL ACTUAL CABLE CODES.
11. REFER TO ARCHITECTURAL DRAWINGS FOR MINIMUM CLEARANCE REQUIREMENTS TO DUCTWORK,CONDUIT, CABLE TRAY. LIGHTING, ETC.
12. ALL COMMUNICATIONS RACEWAY AND PATHWAYS INCLUDING BUT NOT LIMITED TO CONDUIT, SLEEVES, CABLE TRAY, J-HOOKS SHALL BE INSTALLED TO MINIMIZE UNNECESSARY CABLE LENGTHS AND MAINTAIN INDUSTRY STANDARD LENGTH LIMITATIONS FOR HORIZONTAL CABLE DISTRIBUTION (I.E. CAT.5E AND CAT.6A).NO HORIZONTAL CABLE LENGTH (BASIC LINK) SHALL EXCEED 90 METERS (295 FEET).
13. CONDUIT SLEEVES SHALL BE INSTALLED THROUGH ALL WALLS WHERE CABLING IS ROUTED USING J-HOOKS TO PROVIDE CONTINUOUS UN-OBSTRUCTED PATHWAYS TO NEAREST COMMUNICATIONS RO0MS FROM STATIONS DEVICES.
14. REFER TO AV CONSTRUCTION DOCUMENTS FOR AV CONDUIT REQUIREMENT INCLUDING SIZES,QUANTITIES, AND LOCATIONS.
15. ALL COMMUNICATIONS CONDUIT, CABLE TRAYS, LADDER RACKS, AND EQUIPMENT RACKS SHALL BE BONDED TO BUILDING GROUND SYSTEM PER NEC 250.
16. ALL COMMUNICATION CONDUIT OR SLEEVES ROUTED THROUGH ELECTRICAL ROOMS SHALL BE PHYSICALLY CONTINUOUS AND BONDED TO GROUND SYSTEM.
17. ANY CABLE TRAY ROUTED THROUGH ELECTRICAL ROOMS OR WITHIN PROXIMITY OF INTERFERING ELECTRICAL SOURCES, SHALL BE ENCLOSED TYPE USING SOLID BOTTOM TROUGH WITH REMOVABLE COVERS. CABLE TRAY SHALL BE BONDED TO GROUND SYSTEM.
18. J-HOOKS SHALL BE ONLY USED IN ACCESSIBLE FINISHED CEILING SPACES NOT SERVED BY CABLE TRAY OR CONDUIT.
19. ALL TELE/DATA CONDUIT AND OTHER RACEWAY INFRASTRUCTURE SHALL HAVE NO LESS THAN 25% SPARE CAPACITY ABOVE THE NEC MINIMUM FILL RATIOS.
20. ALL COMMUNICATIONS CONDUIT LARGER THAN 2" SHALL HAVE A MINIMUM BEND RADIUS OF 10:1 OF THE INSIDE DIAMETER FOR ALL ELBOWS. ALL COMMUNICATIONS CONDUIT 2" AND SMALLER SHALL HAVE A MINIMUM BEND RADIUS OF 6:1 OF THE INSIDE DIAMETER FOR ALL ELBOWS.
21. COMMUNICATIONS CONDUIT ROUTING SHALL NOT EXCEED 180° FOR THE SUM OF ELBOWS FOR A PARTICULAR CONDUIT RUN WITHOUT AN APPROVED PULL-BOX OR MANHOLE. THE MAXIMUM BEND FOR ANY LOCATION SHALL NOT EXCEED 90°.
22. PROVIDE PROTECTIVE BUSHINGS ON ALL COMMUNICATIONS CONDUITS INCLUDING RISER CONDUITS/SLEEVES, HORIZONTAL CONDUITS, DEVICE CONDUITS, AND SLEEVES.
23. ALL RISER CONDUIT SHALL BE STUBBED A MINIMUM OF 2" AFF. PROVIDE A 2" CURB IF SLAB BLOCK-OUT IS USED RATHER THAN SLEEVES. SERVICE PROVIDER AND UNDERGROUND CONDUIT SHALL BE STUBBED A MINIMUM OF 4" AFF.
24. ALL FIBER OPTIC CABLE SHALL BE ARMORED OR INSTALLED WITHIN APPROVED/UL-LISTED INNER-DUCT COMPLETE WITH FITTINGS, COUPLINGS, AND ADAPTERS (CARLON RISER-GARD, PLENUM-GARD, OR APPROVED EQUAL). FIBER OPTIC CABLE CAN UTILIZE METALLIC ARMORED SHEATH RATHER THAN USINGINNER-DUCT.
25. FINAL CABLE INSTALLATION, ALL UNDERGROUND COMMUNICATIONS CONDUIT SHALL BE SEALED TO PREVENT WATER, GAS AND RODENTS FROM ENTERING FACILITY.
26. ALL COMMUNICATIONS CABLE INSTALLED BELOW GRADE SHALL BE GEL FILLED PIC/PE-89 PER RUS/REA DESIGNATION.
27. ALL UNDERGROUND COMMUNICATIONS CONDUIT SHALL HAVE METALLIC LOCATOR TAPE.
28. ALL COMMUNICATIONS CABLE SHALL BE PLENUM RATED (CMP), RISER RATED (CMR) AND UNDERGROUND RATED (WATERBLOCK) ACCORDING TO USE AND ENVIRONMENTAL CONDITIONS.
29. ALL BACKBONE (RISER) COMMUNICATIONS CABLE SHALL BE INSTALLED BASED ON A PHYSICAL STAR TOPOLOGY. REFER TO ONE-LINES DIAGRAMS FOR SPECIFIC ROUTING REQUIREMENTS.
30. ANY COMMUNICATIONS CABLES (FIBER AND COPPER) INSTALLED BELOW GRADE, UNDERGROUND,OR OTHER LOCATIONS SUBJECT TO WET CONDITIONS SHALL UTILIZE WATERBLOCK CONSTRUCTION.
31. CONTRACTOR SHALL NOT PAINT CABLES AND/OR SPRAY CABLES WITH FIRE PROOFING MATERIAL AS IT CAN AFFECT CABLE PERFORMANCE AND WILL VOID THE CABLE WARRANTY.

TECHNOLOGY RESPONSIBILITY SCHEDULE

SYSTEMS	PROJECT DOCUMENTATION				PROJECT PROVISIONING				NOTES
	CONDUIT / PATHWAY SYSTEMS	STRUCTURAL SUPPORT	CABLING SYSTEM	SYSTEM EQUIP.	CONDUIT / PATHWAY SYSTEMS	STRUCTURAL SUPPORT	CABLING SYSTEM	SYSTEM EQUIP.	
AUDIOVISUAL SYSTEM	A/E	A/E	A/E	A/E	PRC	PRC	PRC	PRC	D1, P1
COMMUNICATIONS SYSTEM (STRUCTURED CABLE)	A/E	A/E	A/E	A/E	PRC	PRC	PRC	PRC	D1, P1
COMMUNICATION SYSTEM (MDF/IDF ROOM FITOUT)	A/E	A/E	A/E	A/E	PRC	PRC	PRC	PRC	D1, P1
IT SYSTEM (DATA / PHONE EQUIPMENT)	N/A	N/A	O / OV	O / OV	N/A	N/A	O / OV	O / OV	D4, P3, S2
DISTRIBUTED ANTENNA CELLULAR SYSTEM	A/E	PRC	PRC	PRC	PRC	PRC	PRC	PRC	D3, P1, S3
EMERGENCY RESPONDER RADIO SYSTEMS	A/E	PRC	PRC	PRC	PRC	PRC	PRC	PRC	D3, P1, S4
ACCESS CONTROL SYSTEM	A/E	A/E	A/E	A/E	PRC	PRC	PRC	PRC	D1, P1
DURESS SYSTEMS	A/E	A/E	A/E	A/E	PRC	PRC	PRC	PRC	D1, P1
INTRUSION DETECTION SYSTEM	A/E	A/E	A/E	A/E	PRC	PRC	PRC	PRC	D1, P1
VIDEO SURVEILLANCE SYSTEM	A/E	A/E	A/E	A/E	PRC	PRC	PRC	PRC	D1, P1
SPECIALTY SYSTEMS									
911 SYSTEMS	A/E	A/E	911	911	PRC	PRC	911	911	D5, P2, S5
RACES	A/E	A/E	O / OV	O / OV	PRC	PRC	O / OV	O / OV	D2, P2
RADIO EQUIPMENT	A/E	A/E	RAD	RAD	PRC	PRC	RAD	RAD	D6, P4, S5

LEGEND

A/E = ARCHITECTURAL / ENGINEER O / OV = OWNER / OWNER'S VENDOR NiP = NOT IN PROJECT PRC = PROJECT CONTRACTOR N/A = NOT APPLICABLE 911 = 911 VENDOR RAD = RADIO VENDOR

GENERAL NOTES

A. RESPONSIBILITIES INDICATED ABOVE ARE RECOMMENDATIONS ONLY AND PROVIDED AS A COURTESY TO CONTRACTOR.
B. NOT ALL RESPONSIBILITIES MAY NOT BE INDICATED ON THIS SCHEDULE. WHERE SCOPE DEFICIENCIES ARISE, PROVIDE WRITTEN NOTIFICATION TO ENGINEER.
C. PROVISIONING MAY BE REVISED THROUGHOUT THE COURSE OF THE CONSTRUCTION PROJECT. ALL SUBSEQUENT DOCUMENTATION REVISING CONTRACTORS RESPONSIBILITIES SHALL SUPERSEDE INFORMATION PROVIDE HEREIN.
D. CONDUIT / PATHWAY SYSTEMS: SYSTEM TO SUPPORT CABLE ROUTING THROUGHOUT FACILITY. SYSTEM TO INCLUDE BUT NOT BE LIMITED TO CONDUIT, CABLE TRAY, J-HOOKS / SLINGS SURFACE RACEWAY AND SUPPORTING ELEMENTS.
E. STRUCTURAL SUPPORTS: CONSTRUCTION ELEMENTS TO SUPPORT MOUNTED DEVICES (I.E. VIDEO DISPLAYS, PROJECTORS, SYSTEM PANELS, ETC). SUPPORTS TO INCLUDE BUT NOT BE LIMITED TO BACKING BOARDS, UNISTRUT RIGGING AND ACCESSORIES.
F. CABLING SYSTEMS: CABLING REQUIRED TO PROVIDE A FULLY FUNCTIONING AND OPERATIONAL SYSTEMS.
G. SYSTEM EQUIPMENT: SYSTEM EQUIPMENT REQUIRED TO PROVIDE A FULLY FUNCTIONING AND OPERATIONAL SYSTEMS. EQUIPMENT TO INCLUDE BUT NOT LIMITED TO ACTIVE COMPONENTS (SWITCHES, PROCESSOR EQUIPMENT, POWER SUPPLIES, ETC), PASSIVE COMPONENTS (PANEL ENCLOSURES, PATCH PANELS, RACK ENCLOSURES, ETC) AND ACCESSORIES.

DOCUMENTATION NOTES

D1 THE ARCHITECTURAL / ENGINEERING DESIGN TEAM SHALL PROVIDE DOCUMENTATION FOR A FULL AND COMPLETE SYSTEM DESIGN.
D2 THE ARCHITECTURAL / ENGINEERING DESIGN TEAM SHALL PROVIDE DOCUMENTATION FOR THE CONDUIT PATHWAYS AND STRUCTURAL SUPPORTS. THE OWNER SHALL MAINTAIN SYSTEMS DRAWINGS THAT ARE SEPARATE AND INDEPENDENT OF THE CONSTRUCTION DOCUMENTS.
D3 THE ARCHITECTURAL / ENGINEERING DESIGN TEAM SHALL PROVIDE DOCUMENTATION FOR THE RISER / ROOF CONDUIT PATHWAYS. THE PROJECT CONTRACTOR'S SUBMITTALS SHALL SERVE AS THE DRAWINGS OF RECORD FOR THE SCOPE INDICATED HEREIN. USE THESE DOCUMENTS FOR FINAL COORDINATION WITH OTHER TRADES.
D4 THE OWNER SHALL MAINTAIN SYSTEMS DRAWINGS THAT ARE SEPARATE AND INDEPENDENT OF THE CONSTRUCTION DOCUMENTS.
D5 THE ARCHITECTURAL / ENGINEERING DESIGN TEAM SHALL PROVIDE DOCUMENTATION FOR THE CONDUIT PATHWAYS AND STRUCTURAL SUPPORTS. THE VENDOR SHALL MAINTAIN SYSTEMS DRAWINGS THAT ARE SEPARATE AND INDEPENDENT OF THE CONSTRUCTION DOCUMENTS.
D6 THE ARCHITECTURAL / ENGINEERING DESIGN TEAM SHALL PROVIDE DOCUMENTATION FOR THE HORIZONTAL CABLING, CONDUIT PATHWAYS AND STRUCTURAL SUPPORTS. THE VENDOR SHALL MAINTAIN SYSTEMS DRAWINGS THAT ARE SEPARATE AND INDEPENDENT OF THE CONSTRUCTION DOCUMENTS.

PROVISIONING NOTES

P1 THE PROJECT CONTRACTOR(S) SHALL PROVIDE ALL SYSTEM REQUIREMENTS FOR A FULLY FUNCTIONAL AND OPERATING SYSTEM READY FOR THE OWNERS USE UNLESS NOTED OTHERWISE. REQUIREMENTS SHALL INCLUDE BUT NOT BE LIMITED TO FURNISHING AND INSTALLATION OF SYSTEM COMPONENTS, CABLING, CABLE TERMINATION EQUIPMENT, PROGRAMING, CONDUIT ROUGH-IN, CABLE PATHWAY, STRUCTURAL SUPPORTS AND COORDINATION.
P2 THE PROJECT CONTRACTOR(S) SHALL PROVIDE ALL CABLE PATHWAY ROUGH-IN REQUIREMENTS FOR AN OWNER PROVIDED SYSTEMS. REQUIREMENTS SHALL INCLUDE BUT NOT BE LIMITED TO FURNISHING AND INSTALLATION OF CONDUIT ROUGH-IN, CABLE PATHWAY, STRUCTURAL SUPPORTS AND COORDINATION.
P3 OWNER / OWNERS VENDOR SHALL PROVIDE ALL SYSTEMS REQUIREMENTS FOR A FULLY FUNCTIONAL AND OPERATING SYSTEMS.
P4 THE PROJECT CONTRACTOR(S) SHALL PROVIDE HORIZONTAL CABLING, CONDUIT ROUGH-IN, CABLE PATHWAY AND STRUCTURAL SUPPORT REQUIREMENTS FOR A VENDOR PROVIDED SYSTEMS. VENDOR SHALL PROVIDE SYSTEM EQUIPMENT, ANTENNAS AND CABLING TO ANTENNAS.

SYSTEM NOTES

S1 ITEMS LISTED WITHIN THE EXCEPTIONS SECTION OF EACH PARTICULAR SYSTEM HAVE SPECIFIC REQUIREMENTS OUTSIDE OF THE OVERRIDING SYSTEMS UMBRELLA TO WHICH THEY BELONG.
S2 IT SYSTEM(S) SHALL BE DEFINED AS THE MAIN DATA / VOICE HEAD-END EQUIPMENT. IT SYSTEM(S) SHALL INCLUDE BUT NOT BE LIMITED TO NETWORK SWITCHES, NETWORK ROUTERS, NETWORK MODEMS, GATEWAYS, VOIP EQUIPMENT AND TELEPHONE SWITCH EQUIPMENT.
S3 THIS BUILDING MAY REQUIRE A DISTRIBUTED ANTENNA SYSTEM (DAS) FOR ENHANCEMENT OF IN-BUILDING WIRELESS COVERAGE. DAS SPECIFICS INCLUDING SYSTEM DESIGN AND COST ARE DEPENDENT ON DISCUSSIONS BETWEEN THE CITY AND POTENTIAL WIRELESS VENDORS, THUS ARE NOT YET DEFINED. CONDUIT PATHWAY HAS BEEN INCLUDED FROM EQUIPMENT ROOMS TO THE BUILDING ROOF FOR DONOR ANTENNA CABLING.
S4 THIS BUILDING MAY REQUIRE AN EMERGENCY RESPONDER RADIO SYSTEM (ERRS) FOR ENHANCEMENT OF IN-BUILDING WIRELESS COVERAGE. ERRS SPECIFICS INCLUDING SYSTEM DESIGN AND COST ARE DEPENDENT ON DISCUSSIONS BETWEEN THE CITY AND POTENTIAL WIRELESS VENDORS, THUS ARE NOT YET DEFINED. CONDUIT PATHWAY HAS BEEN INCLUDED FROM EQUIPMENT ROOMS TO THE BUILDING ROOF FOR DONOR ANTENNA CABLING.
S5 SYSTEMS VENDOR'S DESIGN STANDARDS SHALL SUPERSEDE ANY AND ALL INFORMATION SHOWN WITHIN THESE CONSTRUCTION DOCUMENT. COORDINATION PRIOR TO INSTALLATION IS IMPERATIVE. REGULAR COORDINATION MEETING SHALL BE ESTABLISHED TO ENSURE PROPER COORDINATION.

BRINKLEY SARGENT WIGGINTON ARCHITECTS

Architect: Brinkley Sargent Wigginton Architects (972) 960-9970
Landscape: Kendall Landscape Architecture (214) 739-3226
Structural: L.A. Fuess Partners, Inc (214) 593-1118
MEP: M-E Engineers (214) 741-1589
Civil: KSA Engineers, Inc (903) 236-7700
Technology: M-E Engineers (303) 421-6656

LONGVIEW POLICE DEPARTMENT

XXXX SOUTH ST. LONGVIEW, TEXAS 75601

History

#	Date	Description

STATE OF TEXAS
ANDREW SHIVLEY
109010
LICENSED
PROFESSIONAL ENGINEER

ME Engineers, Inc.
F-10231
08/19/2020

TECHNOLOGY LEGEND AND NOTES

BID ISSUE

20513
08/19/2020

T002

8/17/2020 3:29:04 PM
C:\Revit Projects\2019\LPD_CENTRAL_719_Steven.Moyer@me-engineers.com.rvt

© 2020 Brinkley Sargent Wigginton Architects, Inc.

DOOR SCHEDULE

Door Number	Door Family	Door Function	Monitoring Type
1001A	084236_CW_AL_Dbl-Balanced Door-(F2)	Exterior	M
1001B	084100_CW_AL_Dbl-(G2)	Interior	C
1002A	084100_CW_AL_Single-(A-E_H)	Interior	C
1006A	081000_Hmtl_Single-Varies-(A-E_H)	Interior	C
1008A	081000_Hmtl_Single-Varies-(A-E_H)	Interior	C
1009A	081000_Hmtl_Single-Varies-(A-E_H)	Interior	C
1011A	081000_Hmtl_Single-Varies-(A-E_H)	Interior	C
1017A	081000_Hmtl_Single-Varies-(A-E_H)	Interior	C
1018B	081000_Hmtl_Single-Varies-(A-E_H)	Interior	C
1101A	081000_Hmtl_Single-Varies-(A-E_H)	Interior	C
1101B	084100_CW_HMTL_Single-(A-E_H)	Interior	C
1102A	084100_CW_HMTL_Single-(A-E_H)	Interior	C
1115A	084100_CW_HMTL_Single-(A-E_H)	Interior	C
1116A	081000_Hmtl_Single-Varies-(A-E_H)	Interior	C
1201B	081000_Hmtl_Single-Varies-(A-E_H)	Interior	C
1201C	081000_Hmtl_Single-Varies-(A-E_H)	Interior	C
1202A	081000_Hmtl_Single-Fixed-(A-E_H)	Interior	C
1208A	081000_Hmtl_Single-Varies-(A-E_H)	Interior	C
1302B	081000_Hmtl_Single-Varies-(A-E_H)	Interior	M
1303A	084100_CW_HMTL_Single-(A-E_H)	Interior	C
1309A	081000_Hmtl_Single-Varies-(A-E_H)	Interior	C
1318A	084236_CW_AL_Single-Balanced Door-(F)	Exterior	C
1402A	081000_Hmtl_Single-Fixed-(A-E_H)	Interior	C
1404A	081000_Hmtl_Single-Varies-(A-E_H)	Interior	C
1404B	081000_Hmtl_Single-Fixed-(A-E_H)	Interior	C
1405A	081000_Hmtl_Single-Varies-(A-E_H)	Interior	C
1405B	081000_Hmtl_Single-Varies-(A-E_H)	Interior	C
1414A	081000_Hmtl_Single-Fixed-(A-E_H)	Interior	C
1415A	081000_Hmtl_Single-Fixed-(A-E_H)	Interior	C
1416A	081000_Hmtl_Single-Fixed-(A-E_H)	Interior	C
1426A	081000_Hmtl_Dbl-Fixed-(A2-E2)	Exterior	M
1427B	081000_Hmtl_Single-Fixed-(A-E_H)	Interior	C
1427C	083613_OVHD_Sect Door-Flat (O)	Exterior	M
1427D	081000_Hmtl_Single-Fixed-(A-E_H)	Exterior	C
1431B	083613_OVHD_Sect Door-Flat (O)	Exterior	C
1431C	081000_Hmtl_Single-Fixed-(A-E_H)	Interior	C
1433A	081000_Hmtl_Single-Varies-(A-E_H)	Interior	C
1436A	084100_CW_HMTL_Single-(A-E_H)	Interior	C
1442B	081000_Hmtl_Single-Varies-(A-E_H)	Interior	C
1505B	081000_Hmtl_Single-Fixed-(A-E_H)	Exterior	C
1508B	081000_Hmtl_Single-Fixed-(A-E_H)	Interior	C
1517A	081000_Hmtl_Single-Fixed-(A-E_H)	Exterior	C
1518A	081000_Hmtl_Single-Fixed-(A-E_H)	Interior	C
1519A	081000_Hmtl_Single-Fixed-(A-E_H)	Interior	C
1521A	081000_Hmtl_Dbl-Fixed-(A2-E2)	Exterior	M
2011A	081000_Hmtl_Single-Varies-(A-E_H)	Interior	C
2012A	081000_Hmtl_Single-Varies-(A-E_H)	Interior	C
2021A	081000_Hmtl_Single-Varies-(A-E_H)	Interior	C
2022A	081000_Hmtl_Single-Varies-(A-E_H)	Interior	C
2102B	081000_Hmtl_Single-Varies-(A-E_H)	Interior	C
2109A	081000_Hmtl_Single-Varies-(A-E_H)	Interior	C
2125A	081000_Hmtl_Single-Varies-(A-E_H)	Interior	C
2131A	081000_Hmtl_Single-Varies-(A-E_H)	Interior	C
2143A	081000_Hmtl_Single-Varies-(A-E_H)	Interior	C
2144A	084100_CW_HMTL_Single-(A-E_H)	Interior	C
3002B	081000_Hmtl_Single-Varies-(A-E_H)	Interior	C
3016A	081000_Hmtl_Single-Varies-(A-E_H)	Interior	C
3022A	081000_Hmtl_Single-Varies-(A-E_H)	Interior	C
3031A	081000_Hmtl_Single-Varies-(A-E_H)	Interior	C
3116A	081000_Hmtl_Single-Varies-(A-E_H)	Interior	C
3127A	081000_Hmtl_Single-Varies-(A-E_H)	Interior	C
3129A	081000_Hmtl_Single-Varies-(A-E_H)	Interior	C
3132A	081000_Hmtl_Single-Varies-(A-E_H)	Interior	C
3134A	081000_Hmtl_Single-Varies-(A-E_H)	Interior	C
3135A	081000_Hmtl_Single-Varies-(A-E_H)	Interior	C
3143A	081000_Hmtl_Single-Varies-(A-E_H)	Interior	C
3149A	081000_Hmtl_Single-Varies-(A-E_H)	Interior	C
3152A	081000_Hmtl_Single-Varies-(A-E_H)	Interior	C
3201A	084100_CW_HMTL_Single-(A-E_H)	Interior	C
3207B	081000_Hmtl_Single-Varies-(A-E_H)	Interior	C
ST-03A	081000_Hmtl_Single-Fixed-(A-E_H)	Exterior	M
ST-03B	081000_Hmtl_Single-Varies-(A-E_H)	Interior	C
ST-03C	081000_Hmtl_Single-Varies-(A-E_H)	Interior	C
XXXX	111413_CW_Fence_DBL-Chain Link	Exterior	C
XXXX	111413_CW_Fence_DBL-Chain Link	Exterior	C
XXXX	111413_CW_Fence_DBL-Chain Link	Exterior	C
XXXX	111413_CW_Fence_DBL-Chain Link	Exterior	C
XXXX	111413_CW_Fence_DBL-Chain Link	Exterior	C

CAMERA SCHEDULE

	CAMERA INFORMATION												RESOLUTION	NOTES
		CEILING - (ACCESSIBLE) -FLUSH MOUNT	CEILING (NON-ACCESSIBLE) - SURFACE MOUNT	CEILING (EXPOSED): PENDANT MOUNT	WALL - SURFACE MOUNT	WALL - RECESSED	ROOF - SURFACE ARM MOUNT	POLE - SURFACE ARM MOUNT	VARIFOCAL LENS (3-9 mm)	VARIFOCAL LENS (9-12 mm)	ADVANCE IMAGING - WIDE DYNAMIC	FIXED 360-DEGREE MULTI-LENS		
	CAMERA TYPE	MOUNTING							LENS TYPE					
	2CA	X							X				2 MEGAPIXEL	
	2CN		X						X				2 MEGAPIXEL	
	2CE			X					X				2 MEGAPIXEL	
	2WS				X				X				2 MEGAPIXEL	
	5WR					X							5 MEGAPIXEL	COVERT IN-WALL
	4CA	X			X								4 MEGAPIXEL	COVERT PIR
	5P							X	X				5 MEGAPIXEL	
	5WS				X				X				5 MEGAPIXEL	

GENERAL NOTES:

1. ALL CAMERAS LOCATED AT EXTERIOR LOCATIONS SHALL BE EXTERIOR GRADE CAMERAS IN LIEU OF INTERIOR GRADE.
2. REFER TO THE SECURITY DETAILS FOR ADDITIONAL CAMERA REQUIREMENTS. IF CAMERA REQUIREMENTS ARE IN CONFLICT, PROVIDE MOST STRINGENT REQUIREMENTS TO MEET ALL POSSIBLE CONFIGURATIONS.
3. THE CONTRACTOR SHALL PROVIDE HOUSING EQUIPMENT AS INDICATED WITHIN THIS SCHEDULE. HOUSING REQUIREMENTS MAY VARY PER CAMERA TYPE, I.E. HOUSING FOR DOME CAMERAS MAY BE INTEGRAL TO CAMERA WHERE AS A BOX TYPE CAMERA MAY REQUIRE ADDITIONAL EQUIPMENT TO FULFIL SPECIFICATIONS.
4. THE CONTRACTOR SHALL PROVIDE ALL ENVIROMENTAL PROTECTION EQUIPMENT FOR CAMERAS INDICATED AS WEATHER / ENVIRONMENTAL RESISTANT OR PROOF INCLUDING BUT NOT BE LIMITED TO; ENVIRONMENTAL ENCLOSURES, HEATERS, COOLERS, APPROPRIATE POWER SUPPLIES, LIQUID TIGHT FITTINGS AND CAULKING.
5. THE CONTRACTOR SHALL PROVIDE VANDAL PROTECTION EQUIPMENT FOR CAMERAS INDICATED AS VANDAL RESISTANT OR PROOF INCLUDING BUT NOT LIMITED TO; VANDAL RESISTANT ENCLOSURES, CABLE PROTECTION, ROBUST MOUNTING FIXTURES AND SAFETY SCREWS.
6. REVISION NOTATION: REVISION LABELS ARE LOCATED WITHIN THE REVISION COLUMN. TEXT WITHIN THE CAMERA NUMBER COLUMNS SHALL BE IDENTIFIED WITH THE FOLLOWING FORMATTING: ITALICIZED TEXT INDICATES ADDED INFORMATION, STRIKE-THROUGH TEXT INDICATES REMOVED INFORMATION.

BRINKLEY SARGENT WIGINTON ARCHITECTS

Architect: Brinkley Sargent Wigginton Architects (972) 960-9970
Landscape: Kendall Landscape Architecture (214) 739-3226
Structural: L.A. Fuess Partners, Inc (214) 593-1118
MEP: M-E Engineers (214) 741-1589
Civil: KSA Engineers, Inc (903) 236-7700
Technology: M-E Engineers (303) 421-6656

LONGVIEW POLICE DEPARTMENT

XXXX SOUTH ST. LONGVIEW, TEXAS 75601

History

#	Date	Description

STATE OF TEXAS
ANDREW SHIVLEY
109010
LICENSED
PROFESSIONAL ENGINEER
ME Engineers, Inc.
F-10231
08/19/2020

TECHNOLOGY SCHEDULES

20513
08/19/2020
T003

BID ISSUE

5/17/2020 2:29:05 PM
C:\Revit Projects\2015\LPD_CENTRAL_F19_Steven.Maxwell@me-engineers.com.rvt

© 2020 Brinkley Sargent Wigginton Architects, Inc.

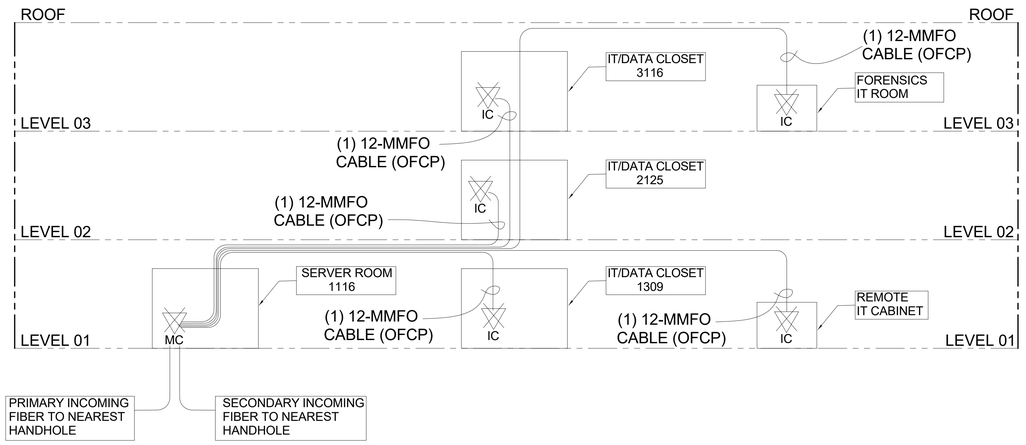

A TECHNOLOGY FIBER OPTIC ONE-LINE DIAGRAM

NO SCALE

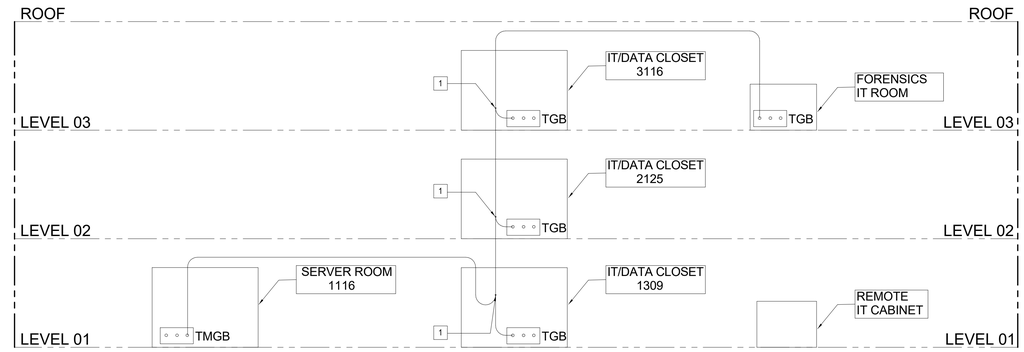

C TECHNOLOGY GROUNDING ONE-LINE DIAGRAM

NO SCALE

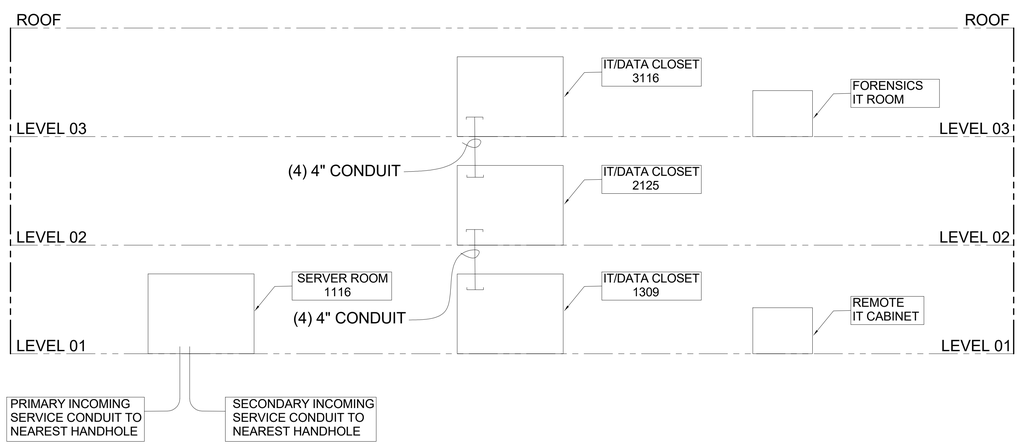

B TECHNOLOGY RACEWAY ONE-LINE DIAGRAM

NO SCALE

GENERAL NOTES:

1. REFER TO SYMBOL LEGEND FOR ADDITIONAL REQUIREMENTS, INCLUDING BUT NOT LIMITED TO, INSTALLATION OF RACEWAY, CABLING, AND DEVICES.
2. CONTRACTOR SHALL CROSS-CHECK ALL CABLE RATINGS TO ENSURE APPROPRIATELY RATED CABLE (RISER, PLENUM, UNDERGROUND, ETC.) IS PROVIDED FOR ALL BACKBONE CABLING SEGMENTS BASED ON INTENDED ROUTING.
3. CONTRACTOR SHALL COORDINATE ROUTING AND STUB-UP LOCATIONS FOR ALL LOW VOLTAGE SYSTEMS RISER CONDUIT DURING SHOP DRAWING PROCESS. REFER TO AV DRAWINGS, FIRE ALARM ONE-LINES, AND ENLARGED COMMUNICATIONS ROOM PLANS FOR ADDITIONAL REQUIREMENTS.
4. REFER TO TELECOM GROUNDING DETAILS FOR ADDITIONAL REQUIREMENTS.
5. ALL CONDUIT, CABLE TRAY, LADDER RACK, AND EQUIPMENT CABINETS/RACKS WITHIN COMMUNICATIONS ROOMS SHALL BE GROUNDED TO THE TELECOM GROUNDING BUSBAR WITHIN THAT RESPECTIVE ROOM.
6. GROUNDING CONDUCTORS SHALL BE INSULATED AND INSTALLED IN CABLE TRAY OR CONTINUOUS METALLIC CONDUIT WITH PULL-BOXES AS REQUIRED.
7. ALL CONDUIT USED FOR GROUNDING CONDUCTORS SHALL BE BONDED TO GROUND.

KEY NOTES:

(SOME KEY NOTES MAY NOT APPLY TO THIS SHEET.)

1. PROVIDE IRREVERSIBLE HIGH COMPRESSION TAP FITTING WITH TAP CONDUCTOR CONNECTING THE GROUND BUSBAR TO THE GROUNDING BACKBONE. GROUNDING BACKBONE SHALL NOT BE INTERCONNECTED (DAISY CHAINED) THROUGH THE GROUNDING BUSBAR. REFER TO GROUNDING DETAILS FOR ADDITIONAL CLARIFICATION.

Architect: Brinkley Sargent Wigginton Architects (972) 960-9970
Landscape: Kendall Landscape Architecture (214) 739-3226
Structural: L.A. Fuess Partners, Inc (214) 593-1118
MEP: M-E Engineers (214) 741-1589
Civil: KSA Engineers, Inc (903) 236-7700
Technology: M-E Engineers (303) 421-6656

BRINKLEY SARGENT WIGINTON ARCHITECTS

LONGVIEW POLICE DEPARTMENT

XXXX SOUTH ST. LONGVIEW, TEXAS 75601

History		
#	Date	Description

STATE OF TEXAS
ANDREW SHIVLEY
109010
LICENSED
PROFESSIONAL ENGINEER
ME Engineers, Inc.
F-10231
08/19/2020

TECHNOLOGY ONE-LINE

20513
08/19/2020
T005

BID ISSUE

8/17/2020 2:29:06 PM

C:\Revit Projects\2019\LPD_CENTRAL_19_Steven.Maxwell@me-engineers.com.rvt

© 2020 Brinkley Sargent Wigginton Architects, Inc.

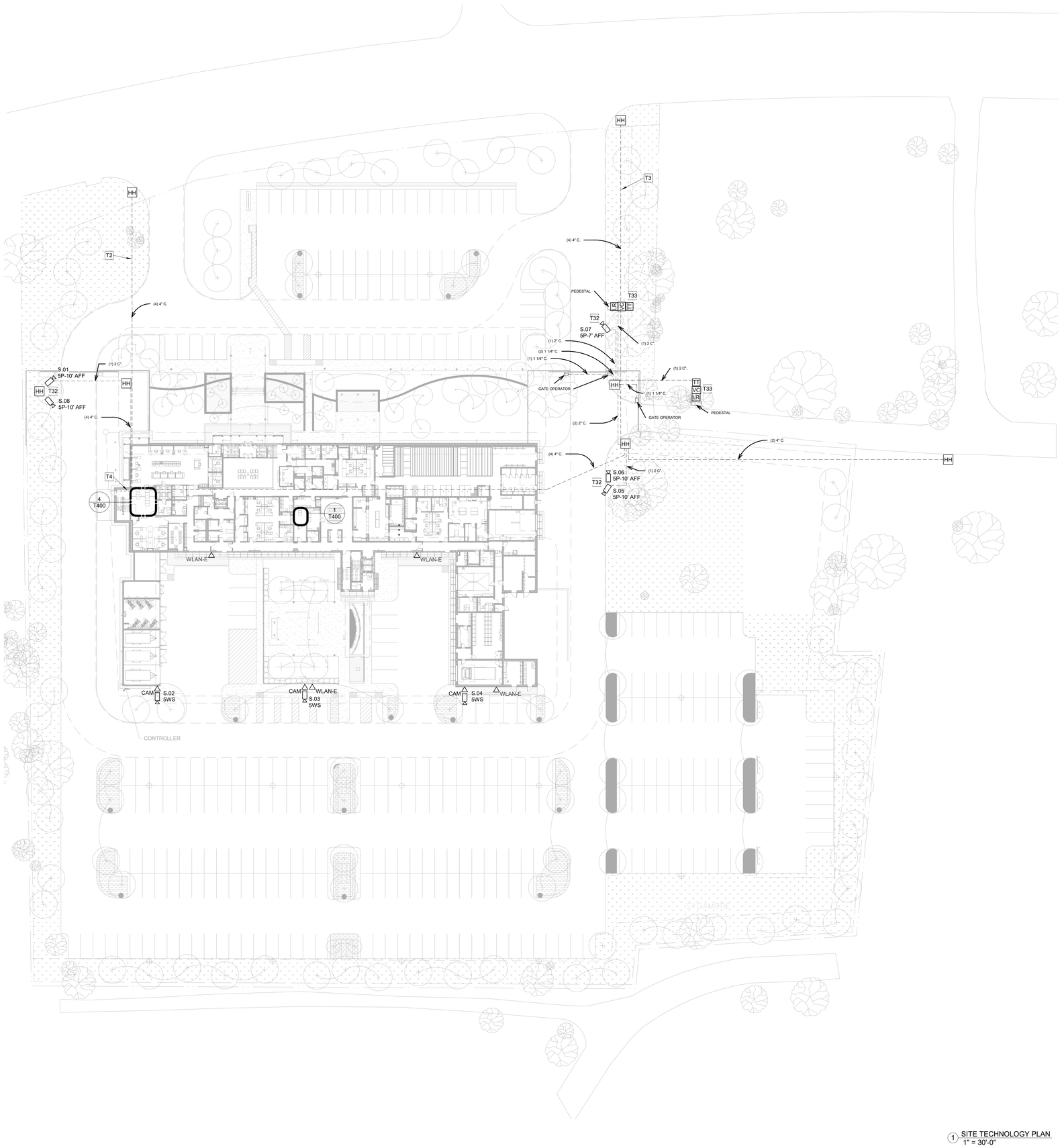

1 SITE TECHNOLOGY PLAN
1" = 30'-0"

GENERAL NOTES:

1. REFER TO SYMBOL LEGEND FOR ADDITIONAL REQUIREMENTS, INCLUDING BUT NOT LIMITED TO, INSTALLATION OF RACEWAY, CABLING, AND DEVICES.

2. ALL SITE TELECOMMUNICATIONS CONDUIT ROUTING IS INDICATED FOR REFERENCE ONLY. REFER TO CIVIL SITE PLAN TO VERIFY EXACT ROUTING AND COORDINATION WITH OTHER SITE UTILITIES.

3. ALL TELECOMMUNICATIONS MANHOLE AND PULL-BOX LOCATIONS ARE INDICATED FOR REFERENCE ONLY. REFER TO CIVIL SITE PLAN TO VERIFY EXACT PLACEMENT AND COORDINATION WITH OTHER SITE UTILITIES.

4. ALL SITE TELECOMMUNICATIONS CONDUIT SHALL BE INSTALLED BELOW FROST LINE.

5. ALL SITE TELECOMMUNICATIONS CONDUIT SHALL MAINTAIN A MINIMUM OF 12-INCHES OF SEPARATION FROM ELECTRICAL CONDUIT WHEN INSTALLED IN SHARED DUCTBANK.

KEYNOTES	
T2	PRIMARY CONDUIT PATH INTO BUILDING FOR TELECOM UTILITIES.
T3	SECONDARY CONDUIT PATH INTO BUILDING FOR TELECOM UTILITIES.
T4	PROVIDE (3) 2"C. FROM SERVER ROOM THROUGH CHASE IN STAIRWELL TO ROOF. PROVIDE PULL-BOX ON ROOF AND EXTEND CONDUIT TO SECOND PULL-BOX AT RADIO ANTENNA MOUNTING FRAME LOCATION AS SHOWN ON ARCHITECTURAL DRAWINGS.
T32	SECURITY CAMERAS TO BE MOUNTED TO LIGHT POLE. REFER TO SITE LIGHTING PLAN FOR ADDITIONAL DETAILS.
T33	PROVIDE SECURITY PEDESTAL FOR MOUNTING TOLL-TAG, VIDEO INTERCOM AND CARD READER.

Architect: Brinkley Sargent Wigginton Architects (972) 960-9970
Landscape: Kendall Landscape Architecture (214) 739-3226
Structural: L.A. Fuess Partners, Inc (214) 593-1118
MEP: M-E Engineers (214) 741-1589
Civil: KSA Engineers, Inc (903) 236-7700
Technology: M-E Engineers (303) 421-6656

BRINKLEY SARGENT WIGINTON ARCHITECTS

LONGVIEW POLICE DEPARTMENT

XXXX SOUTH ST. LONGVIEW, TEXAS 75601

History		
#	Date	Description

STATE OF TEXAS
ANDREW SHIVLEY
109010
LICENSED
PROFESSIONAL ENGINEER
ME Engineers, Inc.
F-10231
08/19/2020

SITE TECHNOLOGY PLAN

20513
08/19/2020
T101

BID ISSUE

C:\Revit Projects\2019\LPD_CENTRAL_19_Steven.Noreen@me-engineers.com.rvt
8/17/2020 2:58:34 PM

© 2020 Brinkley Sargent Wigginton Architects, Inc.

GENERAL NOTES:

1. REFER TO SYMBOL LEGEND FOR ADDITIONAL REQUIREMENTS, INCLUDING BUT NOT LIMITED TO, INSTALLATION OF RACEWAY, CABLING, AND DEVICES.

2. TELECOM ROOM (TR) NUMBERS INDICATED AT DIVIDER LINES ON PLAN DRAWINGS REFER TO THE TR WHERE HORIZONTAL CABLES WITHIN THAT AREA ARE INTENDED TO ORIGINATE FROM.

3. CONTRACTOR(S) RESPONSIBLE FOR PROVIDING TELE/DATA RACEWAY AND/OR CABLING SHALL ENSURE THAT THE PATHWAY (AND CABLE) TO EACH DEVICE LOCATION WITHIN EACH BOUNDARY DOES NOT EXCEED THE HORIZONTAL CABLE LENGTH LIMITATIONS OF 295-FEET, PER WRITTEN SPECIFICATIONS AND TIA/EIA STANDARDS.

KEYNOTES	
T9	REMOTE IT CABINET 24" x 24" x 24".

1 LEVEL 1 - OVERALL TECHNOLOGY PLAN
3/32" = 1'-0"

Architect: Brinkley Sargent Wigginton Architects (972) 960-9970
Landscape: Kendall Landscape Architecture (214) 739-3226
Structural: L.A. Fuess Partners, Inc (214) 593-1118
MEP: M-E Engineers (214) 741-1589
Civil: KSA Engineers, Inc (903) 236-7700
Technology: M-E Engineers (303) 421-6656

BRINKLEY SARGENT WIGINTON ARCHITECTS

LONGVIEW POLICE DEPARTMENT

XXXX SOUTH ST. LONGVIEW, TEXAS 75601

History		
#	Date	Description

STATE OF TEXAS
ANDREW SHIVLEY
109010
LICENSED
PROFESSIONAL ENGINEER
ME Engineers, Inc.
F-10231
08/19/2020

LEVEL 1 - OVERALL TECHNOLOGY PLAN

20513
08/19/2020
T210

BID ISSUE

8/17/2020 2:29:17 PM

C:\Revit Projects\2019\LPD_CENTRAL_T1_Steven.Nirven@me-engineers.com.rvt

© 2020 Brinkley Sargent Wiginton Architects, Inc.

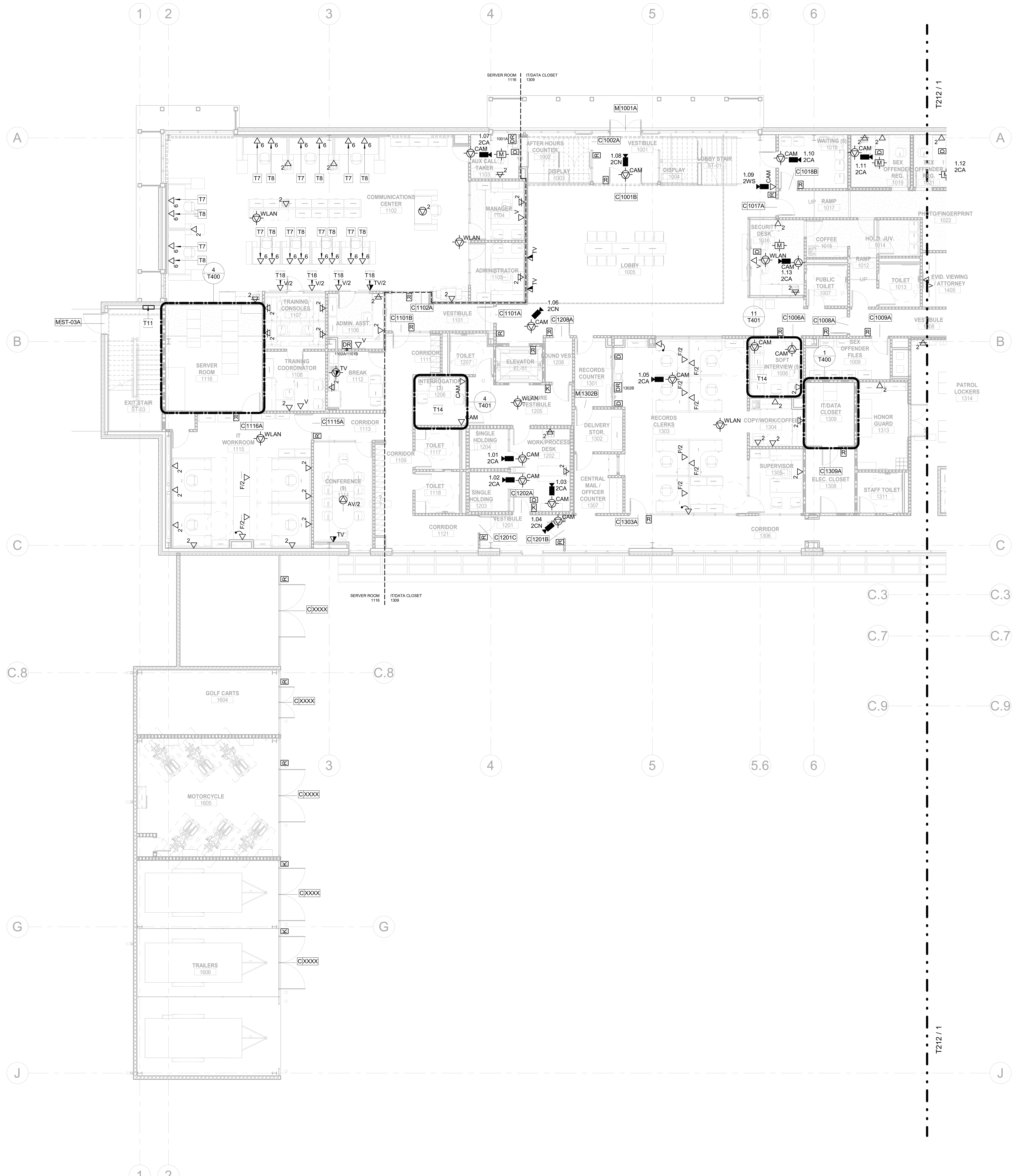

LEVEL 1 - TECHNOLOGY PLAN - WEST
1/8" = 1'-0"

GENERAL NOTES:

1. REFER TO SYMBOL LEGEND FOR ADDITIONAL REQUIREMENTS, INCLUDING BUT NOT LIMITED TO, INSTALLATION OF RACEWAY, CABLING, AND DEVICES.

2. CABLE TRAY INSTALLER SHALL COORDINATE ALL CABLE TRAY SEGMENTS WITH ALL CONTRACTOR TRADES PRIOR TO INSTALLATION TO ENSURE PROPER MINIMUM CLEARANCES ARE OBTAINED FOR CABLE TRAY ACCESSIBILITY WITH RESPECT TO STRUCTURE, CEILINGS, OTHER MEP SYSTEMS, ETC. MECHANICAL AND ELECTRICAL CONTRACTORS SHALL COORDINATE THIS DURING THE SHOP DRAWING PROCESS AND SUBMIT TO ARCHITECT/ENGINEER FOR FINAL REVIEW AND APPROVAL. REFER TO TECHNOLOGY DETAILS AND WRITTEN SPECIFICATIONS FOR ADDITIONAL REQUIREMENTS.

3. CONTRACTOR(S) RESPONSIBLE FOR PROVIDING TELE/DATA RACEWAY AND/OR CABLING SHALL ENSURE THAT THE PATHWAY (AND CABLE) TO EACH DEVICE LOCATION WITHIN EACH BOUNDARY DOES NOT EXCEED THE HORIZONTAL CABLE LENGTH LIMITATIONS OF 295-FEET, PER WRITTEN SPECIFICATIONS AND TIA/EIA STANDARDS.

4. RACEWAY CONTRACTOR SHALL PROVIDE CONDUIT THROUGH WALLS AND ACROSS INACCESSIBLE CEILING SPACES TO ENSURE UNOBSTRUCTED CABLING PATHWAYS ARE PROVIDED FROM EACH DEVICE LOCATION BACK TO THE APPROPRIATE IC-ROOM (AS INDICATED BY DIVIDER LINES). RACEWAY CONTRACTOR SHALL COORDINATE PROPOSED ROUTES WITH CABLING CONTRACTOR DURING THE SHOP DRAWING PROCESS TO ENSURE BOTH PARTIES ARE IN AGREEMENT PRIOR TO SUBMITTING SHOP DRAWINGS OR INITIATING WORK IN THE FIELD.

5. ALL TELE/DATA CABLE ROUTED IN J-HOOKS SHALL BE ROUTED IN DEDICATED J-HOOKS, SEPARATE FROM ALL OTHER LOW VOLTAGE CABLING SYSTEMS INCLUDING, BUT NOT LIMITED TO, AV, FIRE ALARM, SECURITY, AND CONTROLS CABLING.

KEYNOTES	
T7	911 PORTS: 911 VENDOR TO PROVIDE CABLING AND TERMINATION ROUTED TO 911 RACK IN SERVER ROOM.
T8	RADIO PORTS: PROVIDE CABLING AND TERMINATION OF RADIO PORTS ROUTED TO RADIO RACK WITHIN SERVER ROOM.
T11	BLOCKOUT FOR CONDUIT PATHWAY TO ROOF.
T14	SEPARATE VIDEO EVIDENCE SYSTEM PROVIDED AND INSTALLED BY LONGVIEW PD STAFF. PROVIDE ROUGH-IN ONLY FOR CAMERAS. SECURITY CONTRACTOR(S) SHALL CONFIRM FINAL INTERVIEW/INTERROGATION CAMERA PLACEMENT WITH THE ARCHITECT, ENGINEER AND POLICE/DISTRICT ATTORNEY DURING THE SECURITY SHOP DRAWING REVIEW PROCESS, PRIOR TO INSTALLATION.
T18	DATA FOR DISPLAYS ABOVE DOORWAY AT 96" MOUNT IN AV BACKBOX. SEE AV DRAWINGS FOR MORE DETAILS.

BRINKLEY SARGENT WIGINTON ARCHITECTS

Architect:	Brinkley Sargent Wiginton Architects	(972) 960-9970
Landscape:	Kendall Landscape Architecture	(214) 739-3226
Structural:	L.A. Fuess Partners, Inc	(214) 593-1118
MEP:	M-E Engineers	(214) 741-1589
Civil:	KSA Engineers, Inc	(903) 236-7700
Technology:	M-E Engineers	(303) 421-6656

LONGVIEW POLICE DEPARTMENT

XXXX SOUTH ST. LONGVIEW, TEXAS 75601

History		
#	Date	Description

STATE OF TEXAS
ANDREW SHIVLEY
109010
LICENSED
PROFESSIONAL ENGINEER
ME Engineers, Inc.
F-10231
08/19/2020

LEVEL 1 - TECHNOLOGY PLAN - WEST

20513
08/19/2020
T211

BID ISSUE

C:\Revit Projects\2019\LPD_CENTRAL_T19_Steven.Maxwell@me-engineers.com.rvt
8/17/2020 2:29:21 PM

© 2020 Brinkley Sargent Wigginton Architects, Inc.

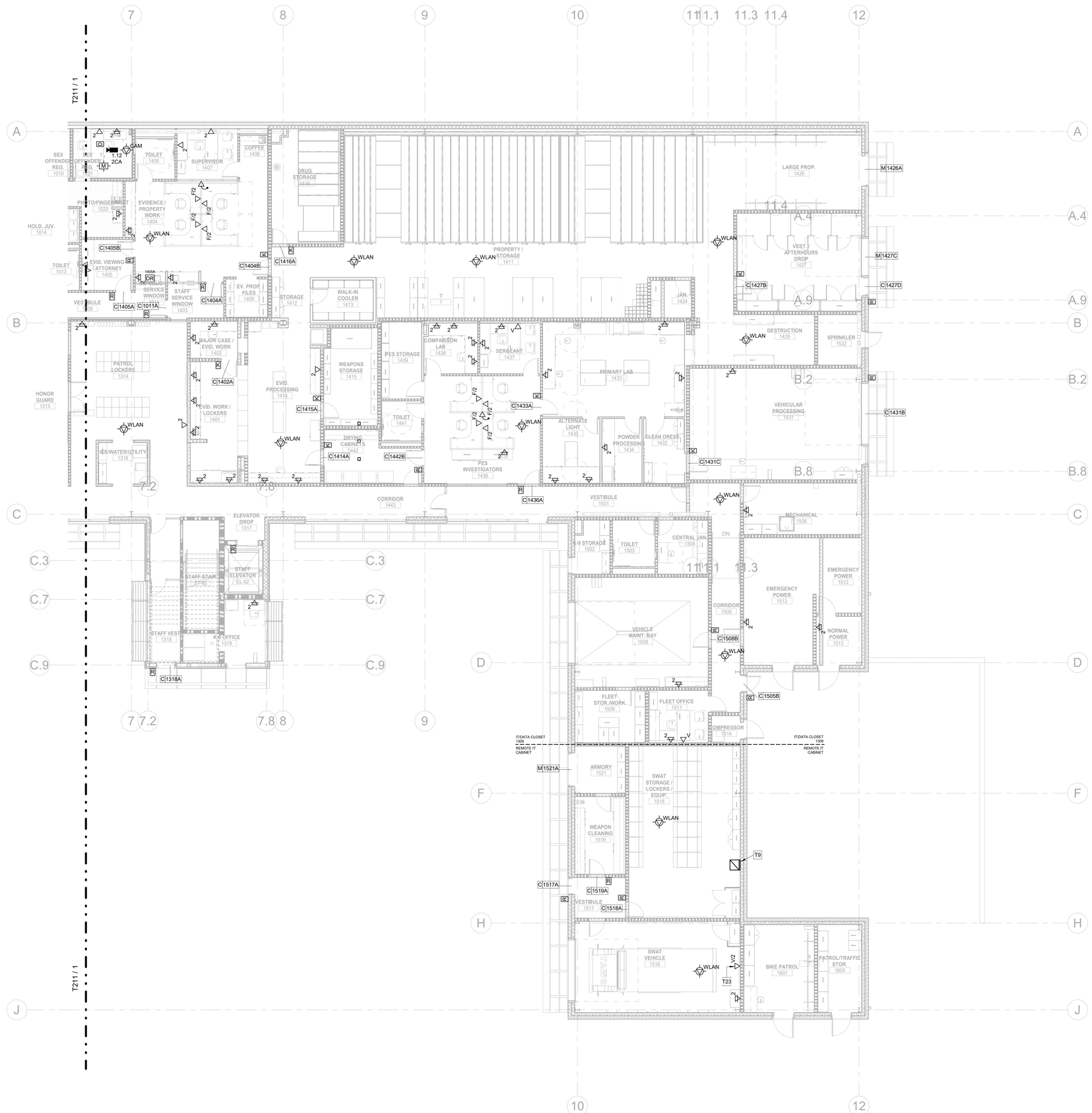

1 LEVEL 1 - TECHNOLOGY PLAN - EAST
1/8" = 1'-0"

GENERAL NOTES:

1. REFER TO SYMBOL LEGEND FOR ADDITIONAL REQUIREMENTS, INCLUDING BUT NOT LIMITED TO, INSTALLATION OF RACEWAY, CABLING, AND DEVICES.

2. CABLE TRAY INSTALLER SHALL COORDINATE ALL CABLE TRAY SEGMENTS WITH ALL CONTRACTOR TRADES PRIOR TO INSTALLATION TO ENSURE PROPER MINIMUM CLEARANCES ARE OBTAINED FOR CABLE TRAY ACCESSIBILITY WITH RESPECT TO STRUCTURE, CEILINGS, OTHER MEP SYSTEMS, ETC. MECHANICAL AND ELECTRICAL CONTRACTORS SHALL COORDINATE THIS DURING THE SHOP DRAWING PROCESS AND SUBMIT TO ARCHITECT/ENGINEER FOR FINAL REVIEW AND APPROVAL. REFER TO TECHNOLOGY DETAILS AND WRITTEN SPECIFICATIONS FOR ADDITIONAL REQUIREMENTS.

3. CONTRACTOR(S) RESPONSIBLE FOR PROVIDING TELE/DATA RACEWAY AND/OR CABLING SHALL ENSURE THAT THE PATHWAY (AND CABLE) TO EACH DEVICE LOCATION WITHIN EACH BOUNDARY DOES NOT EXCEED THE HORIZONTAL CABLE LENGTH LIMITATIONS OF 295-FEET, PER WRITTEN SPECIFICATIONS AND TIA/EIA STANDARDS.

4. RACEWAY CONTRACTOR SHALL PROVIDE CONDUIT THROUGH WALLS AND ACROSS INACCESSIBLE CEILING SPACES TO ENSURE UNOBSTRUCTED CABLING PATHWAYS ARE PROVIDED FROM EACH DEVICE LOCATION BACK TO THE APPROPRIATE IC-ROOM (AS INDICATED BY DIVIDER LINES). RACEWAY CONTRACTOR SHALL COORDINATE PROPOSED ROUTES WITH CABLING CONTRACTOR DURING THE SHOP DRAWING PROCESS TO ENSURE BOTH PARTIES ARE IN AGREEMENT PRIOR TO SUBMITTING SHOP DRAWINGS OR INITIATING WORK IN THE FIELD.

5. ALL TELE/DATA CABLE ROUTED IN J-HOOKS SHALL BE ROUTED IN DEDICATED J-HOOKS, SEPARATE FROM ALL OTHER LOW VOLTAGE CABLING SYSTEMS INCLUDING, BUT NOT LIMITED TO, AV, FIRE ALARM, SECURITY, AND CONTROLS CABLING.

KEYNOTES	
T9	REMOTE IT CABINET 24" x 24" x 24".
T23	DATA FOR WALL MOUNT PROJECTOR ABOVE WHITEBOARD AT 96" COORDINATE WITH ELECTRICAL MOUNT NEXT TO DUPLEX. SEE AV DRAWINGS.

BRINKLEY SARGENT WIGINTON ARCHITECTS

Architect: Brinkley Sargent Wigginton Architects (972) 960-9970
Landscape: Kendall Landscape Architecture (214) 739-3226
Structural: L.A. Fuess Partners, Inc (214) 593-1118
MEP: M-E Engineers (214) 741-1589
Civil: KSA Engineers, Inc (903) 236-7700
Technology: M-E Engineers (303) 421-6656

LONGVIEW POLICE DEPARTMENT

XXXX SOUTH ST. LONGVIEW, TEXAS 75601

History		
#	Date	Description

STATE OF TEXAS
ANDREW SHIVLEY
109010
LICENSED
PROFESSIONAL ENGINEER
ME Engineers, Inc.
F-10231
08/19/2020

LEVEL 1 - TECHNOLOGY PLAN - EAST

20513
08/19/2020
T212

BID ISSUE

8/17/2020 2:29:25 PM

C:\Revit Projects\20513\LPD_CENTRAL_119_Steven.Moxwell@me-engineers.com.rvt

© 2020 Brinkley Sargent Wigginton Architects, Inc.

GENERAL NOTES:

1. REFER TO SYMBOL LEGEND FOR ADDITIONAL REQUIREMENTS, INCLUDING BUT NOT LIMITED TO, INSTALLATION OF RACEWAY, CABLING, AND DEVICES.

2. TELECOM ROOM (TR) NUMBERS INDICATED AT DIVIDER LINES ON PLAN DRAWINGS REFER TO THE TR WHERE HORIZONTAL CABLES WITHIN THAT AREA ARE INTENDED TO ORIGINATE FROM.

3. CONTRACTOR(S) RESPONSIBLE FOR PROVIDING TELE/DATA RACEWAY AND/OR CABLING SHALL ENSURE THAT THE PATHWAY (AND CABLE) TO EACH DEVICE LOCATION WITHIN EACH BOUNDARY DOES NOT EXCEED THE HORIZONTAL CABLE LENGTH LIMITATIONS OF 295-FEET, PER WRITTEN SPECIFICATIONS AND TIA/EIA STANDARDS.

KEYNOTES

1 LEVEL 2 - OVERALL TECHNOLOGY PLAN
3/32" = 1'-0"

Architect: Brinkley Sargent Wigginton Architects (972) 960-9970
Landscape: Kendall Landscape Architecture (214) 739-3226
Structural: L.A. Fuess Partners, Inc (214) 593-1118
MEP: M-E Engineers (214) 741-1589
Civil: KSA Engineers, Inc (903) 236-7700
Technology: M-E Engineers (303) 421-6656

BRINKLEY SARGENT WIGINTON ARCHITECTS

LONGVIEW POLICE DEPARTMENT

XXXX SOUTH ST. LONGVIEW, TEXAS 75601

History		
#	Date	Description

STATE OF TEXAS
ANDREW SHIVLEY
109010
LICENSED PROFESSIONAL ENGINEER
ME Engineers, Inc.
F-10231
08/19/2020

LEVEL 2 - OVERALL TECHNOLOGY PLAN

20513
08/19/2020
T220

BID ISSUE

8/17/2020 2:29:31 PM

C:\Revit Projects\2018\LPD_CENTRAL_119_Steven.Wouvere@me-engineers.com.rvt

© 2020 Brinkley Sargent Wigginton Architects, Inc.

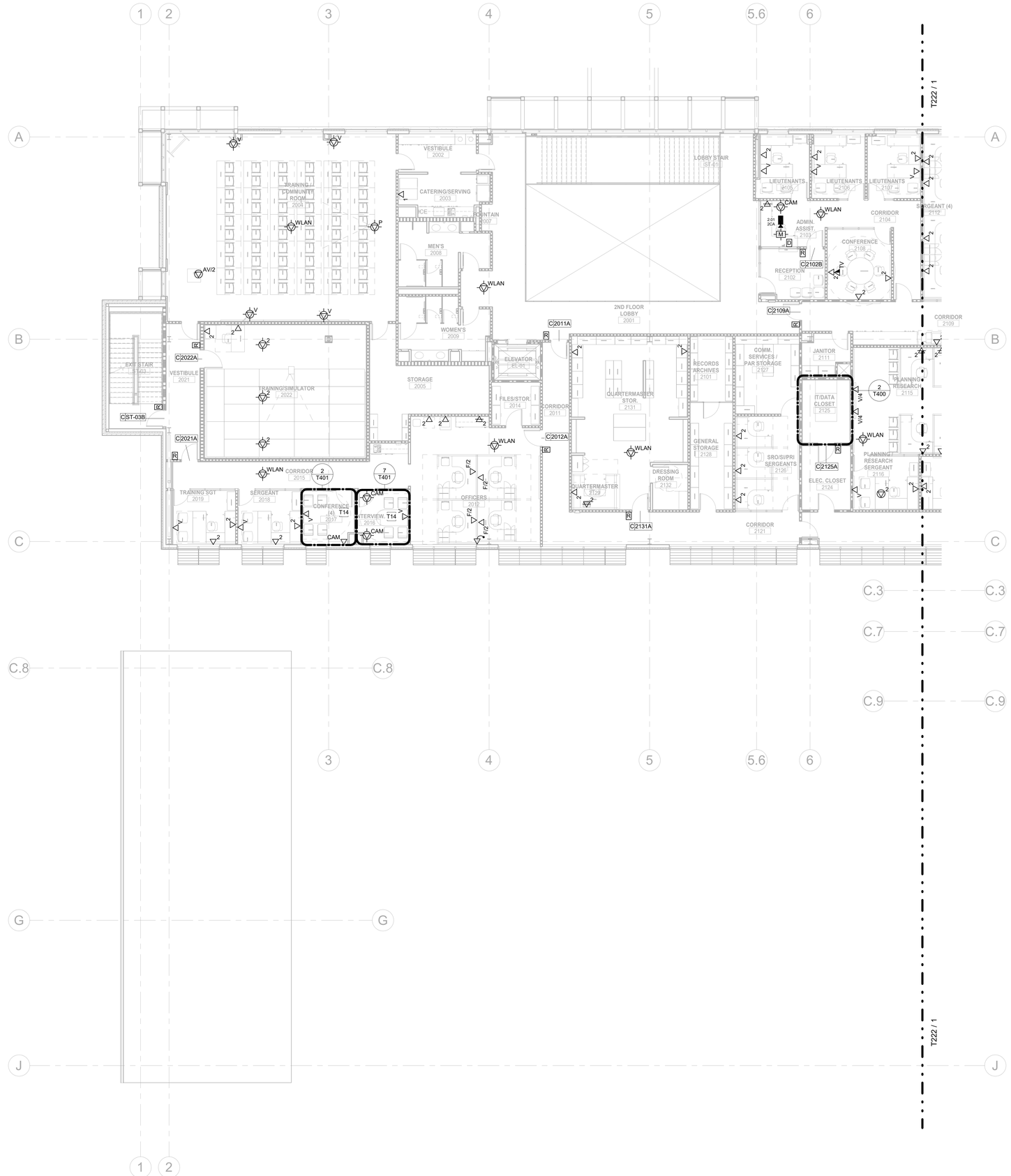

1 LEVEL 2 - TECHNOLOGY PLAN - WEST
1/8" = 1'-0"

GENERAL NOTES:

1. REFER TO SYMBOL LEGEND FOR ADDITIONAL REQUIREMENTS, INCLUDING BUT NOT LIMITED TO, INSTALLATION OF RACEWAY, CABLING, AND DEVICES.

2. CABLE TRAY INSTALLER SHALL COORDINATE ALL CABLE TRAY SEGMENTS WITH ALL CONTRACTOR TRADES PRIOR TO INSTALLATION TO ENSURE PROPER MINIMUM CLEARANCES ARE OBTAINED FOR CABLE TRAY ACCESSIBILITY WITH RESPECT TO STRUCTURE, CEILINGS, OTHER MEP SYSTEMS, ETC. MECHANICAL AND ELECTRICAL CONTRACTORS SHALL COORDINATE THIS DURING THE SHOP DRAWING PROCESS AND SUBMIT TO ARCHITECT/ENGINEER FOR FINAL REVIEW AND APPROVAL. REFER TO TECHNOLOGY DETAILS AND WRITTEN SPECIFICATIONS FOR ADDITIONAL REQUIREMENTS.

3. CONTRACTOR(S) RESPONSIBLE FOR PROVIDING TELE/DATA RACEWAY AND/OR CABLING SHALL ENSURE THAT THE PATHWAY (AND CABLE) TO EACH DEVICE LOCATION WITHIN EACH BOUNDARY DOES NOT EXCEED THE HORIZONTAL CABLE LENGTH LIMITATIONS OF 295-FEET, PER WRITTEN SPECIFICATIONS AND TIA/EIA STANDARDS.

4. RACEWAY CONTRACTOR SHALL PROVIDE CONDUIT THROUGH WALLS AND ACROSS INACCESSIBLE CEILING SPACES TO ENSURE UNOBSTRUCTED CABLING PATHWAYS ARE PROVIDED FROM EACH DEVICE LOCATION BACK TO THE APPROPRIATE IC-ROOM (AS INDICATED BY DIVIDER LINES). RACEWAY CONTRACTOR SHALL COORDINATE PROPOSED ROUTES WITH CABLING CONTRACTOR DURING THE SHOP DRAWING PROCESS TO ENSURE BOTH PARTIES ARE IN AGREEMENT PRIOR TO SUBMITTING SHOP DRAWINGS OR INITIATING WORK IN THE FIELD.

5. ALL TELE/DATA CABLE ROUTED IN J-HOOKS SHALL BE ROUTED IN DEDICATED J-HOOKS, SEPARATE FROM ALL OTHER LOW VOLTAGE CABLING SYSTEMS INCLUDING, BUT NOT LIMITED TO, AV, FIRE ALARM, SECURITY, AND CONTROLS CABLING.

KEYNOTES

T14	SEPARATE VIDEO EVIDENCE SYSTEM PROVIDED AND INSTALLED BY LONGVIEW PD STAFF. PROVIDE ROUGH-IN ONLY FOR CAMERAS. SECURITY CONTRACTOR(S) SHALL CONFIRM FINAL INTERVIEW/INTERROGATION CAMERA PLACEMENT WITH THE ARCHITECT, ENGINEER AND POLICE/DISTRICT ATTORNEY DURING THE SECURITY SHOP DRAWING REVIEW PROCESS, PRIOR TO INSTALLATION.

BRINKLEY SARGENT WIGINTON ARCHITECTS

Architect: Brinkley Sargent Wigginton Architects (972) 960-9970
Landscape: Kendall Landscape Architecture (214) 739-3226
Structural: L.A. Fuess Partners, Inc (214) 593-1118
MEP: M-E Engineers (214) 741-1589
Civil: KSA Engineers, Inc (903) 236-7700
Technology: M-E Engineers (303) 421-6656

LONGVIEW POLICE DEPARTMENT

XXXX SOUTH ST. LONGVIEW, TEXAS 75601

History

#	Date	Description

STATE OF TEXAS
ANDREW SHIVLEY
109010
LICENSED
PROFESSIONAL ENGINEER
ME Engineers, Inc.
F-10231
08/19/2020

LEVEL 2 - TECHNOLOGY PLAN - WEST

20513
08/19/2020
T221

BID ISSUE

C:\Revit Projects\20513\LFD_CENTRAL_R13_Steven.Mowell@me-engineers.com.rvt 8/17/2020 2:29:35 PM

© 2020 Brinkley Sargent Wigginton Architects, Inc.

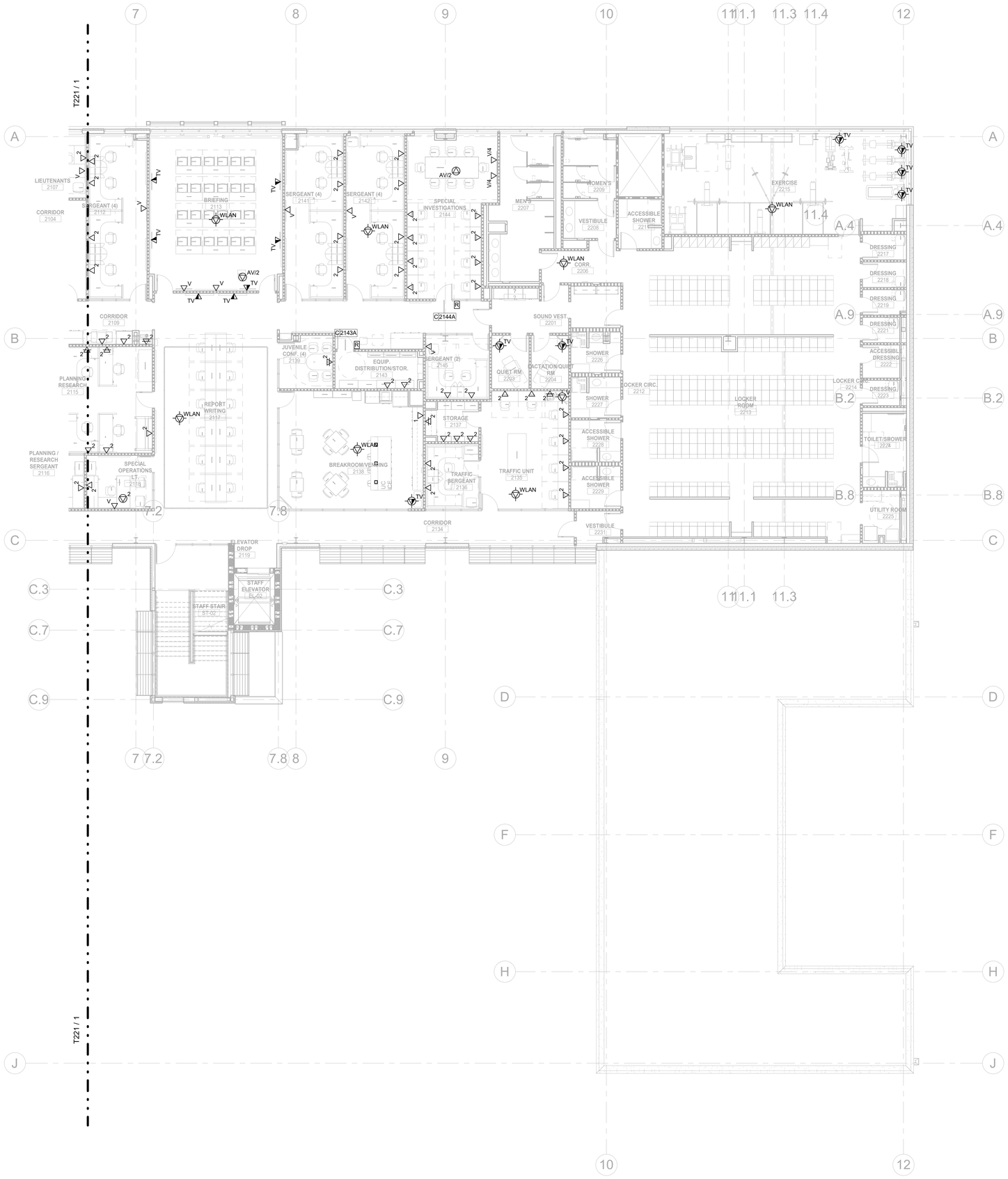

1 LEVEL 2 - TECHNOLOGY PLAN - EAST
1/8" = 1'-0"

GENERAL NOTES:

1. REFER TO SYMBOL LEGEND FOR ADDITIONAL REQUIREMENTS, INCLUDING BUT NOT LIMITED TO, INSTALLATION OF RACEWAY, CABLING, AND DEVICES.

2. CABLE TRAY INSTALLER SHALL COORDINATE ALL CABLE TRAY SEGMENTS WITH ALL CONTRACTOR TRADES PRIOR TO INSTALLATION TO ENSURE PROPER MINIMUM CLEARANCES ARE OBTAINED FOR CABLE TRAY ACCESSIBILITY WITH RESPECT TO STRUCTURE, CEILINGS, OTHER MEP SYSTEMS, ETC. MECHANICAL AND ELECTRICAL CONTRACTORS SHALL COORDINATE THIS DURING THE SHOP DRAWING PROCESS AND SUBMIT TO ARCHITECT/ENGINEER FOR FINAL REVIEW AND APPROVAL. REFER TO TECHNOLOGY DETAILS AND WRITTEN SPECIFICATIONS FOR ADDITIONAL REQUIREMENTS.

3. CONTRACTOR(S) RESPONSIBLE FOR PROVIDING TELE/DATA RACEWAY AND/OR CABLING SHALL ENSURE THAT THE PATHWAY (AND CABLE) TO EACH DEVICE LOCATION WITHIN EACH BOUNDARY DOES NOT EXCEED THE HORIZONTAL CABLE LENGTH LIMITATIONS OF 295-FEET, PER WRITTEN SPECIFICATIONS AND TIA/EIA STANDARDS.

4. RACEWAY CONTRACTOR SHALL PROVIDE CONDUIT THROUGH WALLS AND ACROSS INACCESSIBLE CEILING SPACES TO ENSURE UNOBSTRUCTED CABLING PATHWAYS ARE PROVIDED FROM EACH DEVICE LOCATION BACK TO THE APPROPRIATE IC-ROOM (AS INDICATED BY DIVIDER LINES). RACEWAY CONTRACTOR SHALL COORDINATE PROPOSED ROUTES WITH CABLING CONTRACTOR DURING THE SHOP DRAWING PROCESS TO ENSURE BOTH PARTIES ARE IN AGREEMENT PRIOR TO SUBMITTING SHOP DRAWINGS OR INITIATING WORK IN THE FIELD.

5. ALL TELE/DATA CABLE ROUTED IN J-HOOKS SHALL BE ROUTED IN DEDICATED J-HOOKS, SEPARATE FROM ALL OTHER LOW VOLTAGE CABLING SYSTEMS INCLUDING, BUT NOT LIMITED TO, AV, FIRE ALARM, SECURITY, AND CONTROLS CABLING.

KEYNOTES

BRINKLEY SARGENT WIGINTON ARCHITECTS

Architect: Brinkley Sargent Wigginton Architects (972) 960-9970
Landscape: Kendall Landscape Architecture (214) 739-3226
Structural: L.A. Fuess Partners, Inc (214) 593-1118
MEP: M-E Engineers (214) 741-1589
Civil: KSA Engineers, Inc (903) 236-7700
Technology: M-E Engineers (303) 421-6656

LONGVIEW POLICE DEPARTMENT

XXXX SOUTH ST. LONGVIEW, TEXAS 75601

History		
#	Date	Description

STATE OF TEXAS
ANDREW SHIVLEY
109010
LICENSED
PROFESSIONAL ENGINEER
ME Engineers, Inc.
F-10231
08/19/2020

LEVEL 2 - TECHNOLOGY PLAN - EAST

BID ISSUE

20513
08/19/2020
T222

8/17/2020 2:29:38 PM

C:\Revit Projects\2018\LPD_CENTRAL_119_Steven.Maxwell@me-engineers.com.rvt

© 2020 Brinkley Sargent Wigginton Architects, Inc.

GENERAL NOTES:

1. REFER TO SYMBOL LEGEND FOR ADDITIONAL REQUIREMENTS, INCLUDING BUT NOT LIMITED TO, INSTALLATION OF RACEWAY, CABLING, AND DEVICES.

2. TELECOM ROOM (TR) NUMBERS INDICATED AT DIVIDER LINES ON PLAN DRAWINGS REFER TO THE TR WHERE HORIZONTAL CABLES WITHIN THAT AREA ARE INTENDED TO ORIGINATE FROM.

3. CONTRACTOR(S) RESPONSIBLE FOR PROVIDING TELE/DATA RACEWAY AND/OR CABLING SHALL ENSURE THAT THE PATHWAY (AND CABLE) TO EACH DEVICE LOCATION WITHIN EACH BOUNDARY DOES NOT EXCEED THE HORIZONTAL CABLE LENGTH LIMITATIONS OF 295-FEET, PER WRITTEN SPECIFICATIONS AND TIA/EIA STANDARDS.

KEYNOTES	
T15	ALL DATA CABLES WITHIN THIS OUTLINED SPACE SHALL ORIGINATE FROM PATCH PANEL IN RACK LOCATED IN FORENSICS IT 3136 AND SHALL BE TERMINATED WITH RED JACKS IN FACEPLATE TO INDICATED SECURED NETWORK.

1 LEVEL 3 - OVERALL TECHNOLOGY PLAN
3/32" = 1'-0"

Architect: Brinkley Sargent Wigginton Architects (972) 960-9970
Landscape: Kendall Landscape Architecture (214) 739-3226
Structural: L.A. Fuess Partners, Inc (214) 593-1118
MEP: M-E Engineers (214) 741-1589
Civil: KSA Engineers, Inc (903) 236-7700
Technology: M-E Engineers (303) 421-6656

BRINKLEY SARGENT WIGINTON ARCHITECTS

LONGVIEW POLICE DEPARTMENT

XXXX SOUTH ST. LONGVIEW, TEXAS 75601

History		
#	Date	Description

STATE OF TEXAS
ANDREW SHIVLEY
109010
LICENSED PROFESSIONAL ENGINEER
ME Engineers, Inc.
F-10231
08/19/2020

LEVEL 3 - OVERALL TECHNOLOGY PLAN

20513
08/19/2020

T230

BID ISSUE

8/17/2020 2:29:43 PM

C:\Revit Projects\2019\LPD_CENTRAL_119_Steven.Moseley@me-engineers.com.rvt

© 2020 Brinkley Sargent Wigginton Architects, Inc.

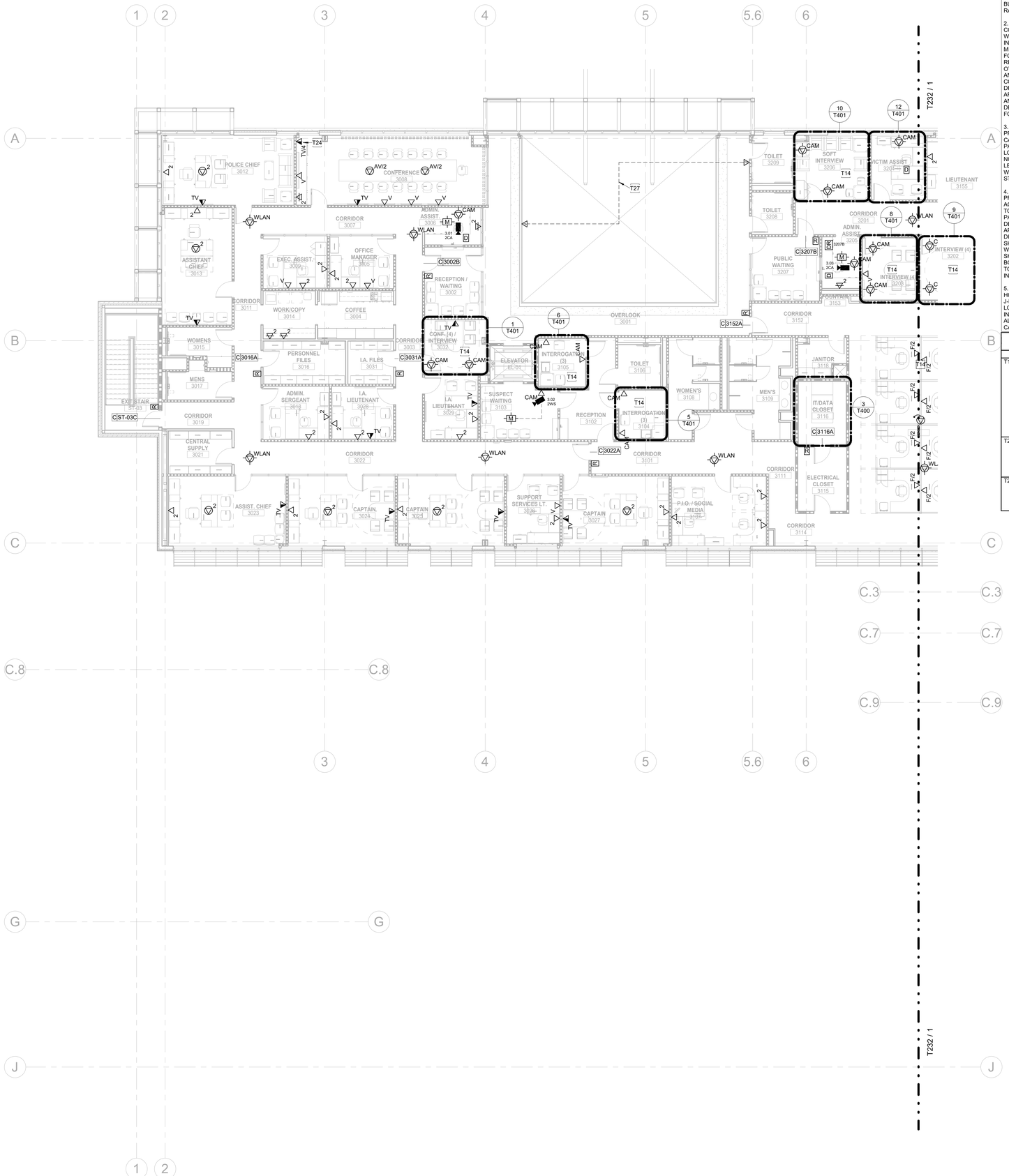

1 LEVEL 3 - TECHNOLOGY PLAN - WEST
1/8" = 1'-0"

GENERAL NOTES:

1. REFER TO SYMBOL LEGEND FOR ADDITIONAL REQUIREMENTS, INCLUDING BUT NOT LIMITED TO, INSTALLATION OF RACEWAY, CABLING, AND DEVICES.

2. CABLE TRAY INSTALLER SHALL COORDINATE ALL CABLE TRAY SEGMENTS WITH ALL CONTRACTOR TRADES PRIOR TO INSTALLATION TO ENSURE PROPER MINIMUM CLEARANCES ARE OBTAINED FOR CABLE TRAY ACCESSIBILITY WITH RESPECT TO STRUCTURE, CEILINGS, OTHER MEP SYSTEMS, ETC. MECHANICAL AND ELECTRICAL CONTRACTORS SHALL COORDINATE THIS DURING THE SHOP DRAWING PROCESS AND SUBMIT TO ARCHITECT/ENGINEER FOR FINAL REVIEW AND APPROVAL. REFER TO TECHNOLOGY DETAILS AND WRITTEN SPECIFICATIONS FOR ADDITIONAL REQUIREMENTS.

3. CONTRACTOR(S) RESPONSIBLE FOR PROVIDING TELE/DATA RACEWAY AND/OR CABLING SHALL ENSURE THAT THE PATHWAY (AND CABLE) TO EACH DEVICE LOCATION WITHIN EACH BOUNDARY DOES NOT EXCEED THE HORIZONTAL CABLE LENGTH LIMITATIONS OF 295-FEET, PER WRITTEN SPECIFICATIONS AND TIA/EIA STANDARDS.

4. RACEWAY CONTRACTOR SHALL PROVIDE CONDUIT THROUGH WALLS AND ACROSS INACCESSIBLE CEILING SPACES TO ENSURE UNOBSTRUCTED CABLING PATHWAYS ARE PROVIDE FROM EACH DEVICE LOCATION BACK TO THE APPROPRIATE IC-ROOM (AS INDICATED BY DIVIDER LINES). RACEWAY CONTRACTOR SHALL COORDINATE PROPOSED ROUTES WITH CABLING CONTRACTOR DURING THE SHOP DRAWING PROCESS TO ENSURE BOTH PARTIES ARE IN AGREEMENT PRIOR TO SUBMITTING SHOP DRAWINGS OR INITIATING WORK IN THE FIELD.

5. ALL TELE/DATA CABLE ROUTED IN J-HOOKS SHALL BE ROUTED IN DEDICATED J-HOOKS, SEPARATE FROM ALL OTHER LOW VOLTAGE CABLING SYSTEMS INCLUDING, BUT NOT LIMITED TO, AV, FIRE ALARM, SECURITY, AND CONTROLS CABLING.

KEYNOTES	
T14	SEPARATE VIDEO EVIDENCE SYSTEM PROVIDED AND INSTALLED BY LONGVIEW PD STAFF. PROVIDE ROUGH-IN ONLY FOR CAMERAS. SECURITY CONTRACTOR(S) SHALL CONFIRM FINAL INTERVIEW/INTERROGATION CAMERA PLACEMENT WITH THE ARCHITECT, ENGINEER AND POLICE/DISTRICT ATTORNEY DURING THE SECURITY SHOP DRAWING REVIEW PROCESS, PRIOR TO INSTALLATION.
T24	DATA FOR AV RACK AT 18" AFF AT WALL INSIDE/BEHIND MILLWORK OR CREDENZA. PROVIDE ONE (1) 1-1/4" CONDUIT AND ONE (1) 2" CONDUIT TO 2G BACKBOX (HUBBLE 260) CONDUIT STUB TO CEILING.
T27	3-WIRE LOW VOLTAGE CONNECTION NEEDED FROM RZ-7 MAIN CONTROLLER TO AMU-1. COORDINATE CONNECTION LOCATIONS WITH ARCHITECT AND SUBMITTED MANUFACTURER.

BRINKLEY SARGENT WIGGINTON ARCHITECTS

Architect: Brinkley Sargent Wigginton Architects (972) 960-9970
Landscape: Kendall Landscape Architecture (214) 739-3226
Structural: L.A. Fuess Partners, Inc (214) 593-1118
MEP: M-E Engineers (214) 741-1589
Civil: KSA Engineers, Inc (903) 236-7700
Technology: M-E Engineers (303) 421-6656

LONGVIEW POLICE DEPARTMENT

XXXX SOUTH ST. LONGVIEW, TEXAS 75601

History		
#	Date	Description

STATE OF TEXAS
ANDREW SHIVLEY
109010
LICENSED
PROFESSIONAL ENGINEER
ME Engineers, Inc.
F-10231
08/19/2020

LEVEL 3 - TECHNOLOGY PLAN - WEST

20513
08/19/2020
T231

BID ISSUE

C:\Revit Projects\2015\LPD_CENTRAL_R15_Steven.Mowell@me-engineers.com.rvt 8/17/2020 2:29:47 PM

© 2020 Brinkley Sargent Wigginton Architects, Inc.

1 LEVEL 3 - TECHNOLOGY PLAN - EAST
1/8" = 1'-0"

GENERAL NOTES:

1. REFER TO SYMBOL LEGEND FOR ADDITIONAL REQUIREMENTS, INCLUDING BUT NOT LIMITED TO, INSTALLATION OF RACEWAY, CABLING, AND DEVICES.

2. CABLE TRAY INSTALLER SHALL COORDINATE ALL CABLE TRAY SEGMENTS WITH ALL CONTRACTOR TRADES PRIOR TO INSTALLATION TO ENSURE PROPER MINIMUM CLEARANCES ARE OBTAINED FOR CABLE TRAY ACCESSIBILITY WITH RESPECT TO STRUCTURE, CEILINGS, OTHER MEP SYSTEMS, ETC. MECHANICAL AND ELECTRICAL CONTRACTORS SHALL COORDINATE THIS DURING THE SHOP DRAWING PROCESS AND SUBMIT TO ARCHITECT/ENGINEER FOR FINAL REVIEW AND APPROVAL. REFER TO TECHNOLOGY DETAILS AND WRITTEN SPECIFICATIONS FOR ADDITIONAL REQUIREMENTS.

3. CONTRACTOR(S) RESPONSIBLE FOR PROVIDING TELE/DATA RACEWAY AND/OR CABLING SHALL ENSURE THAT THE PATHWAY (AND CABLE) TO EACH DEVICE LOCATION WITHIN EACH BOUNDARY DOES NOT EXCEED THE HORIZONTAL CABLE LENGTH LIMITATIONS OF 295-FEET, PER WRITTEN SPECIFICATIONS AND TIA/EIA STANDARDS.

4. RACEWAY CONTRACTOR SHALL PROVIDE CONDUIT THROUGH WALLS AND ACROSS INACCESSIBLE CEILING SPACES TO ENSURE UNOBSTRUCTED CABLING PATHWAYS ARE PROVIDED FROM EACH DEVICE LOCATION BACK TO THE APPROPRIATE IC-ROOM (AS INDICATED BY DIVIDER LINES). RACEWAY CONTRACTOR SHALL COORDINATE PROPOSED ROUTES WITH CABLING CONTRACTOR DURING THE SHOP DRAWING PROCESS TO ENSURE BOTH PARTIES ARE IN AGREEMENT PRIOR TO SUBMITTING SHOP DRAWINGS OR INITIATING WORK IN THE FIELD.

5. ALL TELE/DATA CABLE ROUTED IN J-HOOKS SHALL BE ROUTED IN DEDICATED J-HOOKS, SEPARATE FROM ALL OTHER LOW VOLTAGE CABLING SYSTEMS INCLUDING, BUT NOT LIMITED TO, AV, FIRE ALARM, SECURITY, AND CONTROLS CABLING.

KEYNOTES	
T14	SEPARATE VIDEO EVIDENCE SYSTEM PROVIDED AND INSTALLED BY LONGVIEW PD STAFF. PROVIDE ROUGH-IN ONLY FOR CAMERAS. SECURITY CONTRACTOR(S) SHALL CONFIRM FINAL INTERVIEW/INTERROGATION CAMERA PLACEMENT WITH THE ARCHITECT, ENGINEER AND POLICE/DISTRICT ATTORNEY DURING THE SECURITY SHOP DRAWING REVIEW PROCESS, PRIOR TO INSTALLATION.
T15	ALL DATA CABLES WITHIN THIS OUTLINED SPACE SHALL ORIGINATE FROM PATCH PANEL IN RACK LOCATED IN FORENSICS IT 3136 AND SHALL BE TERMINATED WITH RED JACKS IN FACEPLATE TO INDICATED SECURED NETWORK.
T25	PROVIDE (2) "SECURED NETWORK" DATA CABLES TERMINATED PER KEYNOTE T15 AT THIS LOCATION. PROVIDE (2) GENERAL NETWORK DATA CABLES ORIGINATING FROM IT/DATA CLOSET 3116 AND TERMINATED ON STANDARD COLOR JACK TO MATCH GENERAL DATA JACKS IN REST OF THE BUILDING.
T26	WIFI ACCESS POINT TO BE CONNECTED TO THE GENERAL NETWORK.

BRINKLEY SARGENT WIGINTON ARCHITECTS

Architect: Brinkley Sargent Wigginton Architects (972) 960-9970
Landscape: Kendall Landscape Architecture (214) 739-3226
Structural: L.A. Fuess Partners, Inc (214) 593-1118
MEP: M-E Engineers (214) 741-1589
Civil: KSA Engineers, Inc (903) 236-7700
Technology: M-E Engineers (303) 421-6656

LONGVIEW POLICE DEPARTMENT

XXXX SOUTH ST. LONGVIEW, TEXAS 75601

History		
#	Date	Description

STATE OF TEXAS
ANDREW SHIVLEY
109010
LICENSED PROFESSIONAL ENGINEER
ME Engineers, Inc.
F-10231
08/19/2020

LEVEL 3 - TECHNOLOGY PLAN - EAST

BID ISSUE

20513
08/19/2020
T232

E:\Revit Projects\2019\LPD_CENTRAL_T19_Steven.Mowery@me-engineers.com.rvt 8/17/2020 3:29:51 PM

© 2020 Brinkley Sargent Wigginton Architects, Inc.

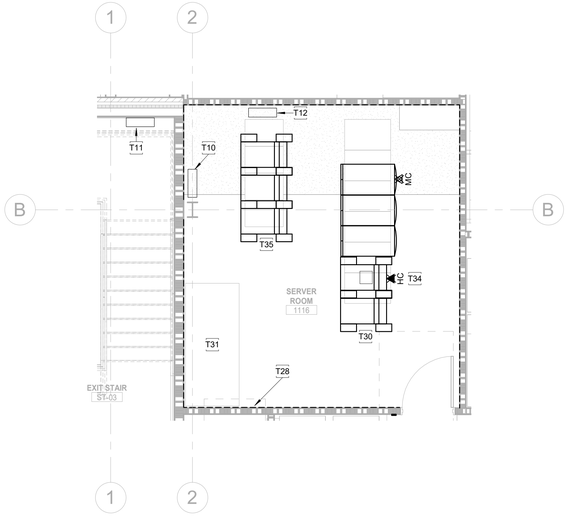

4 TECHNOLOGY ENLARGED PLAN - SERVER ROOM 1116
1/4" = 1'-0"

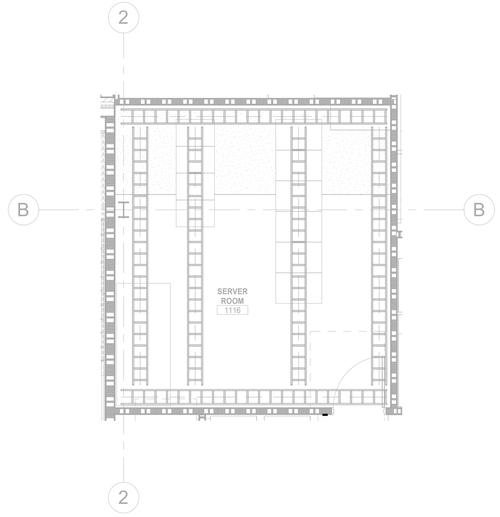

5 TECHNOLOGY ENLARGED PLAN - SERVER ROOM 1116 - CABLE TRAY
1/4" = 1'-0"

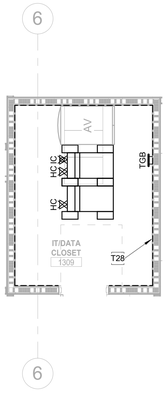

1 TECHNOLOGY ENLARGED PLAN - IT/DATA CLOSET 1309
1/4" = 1'-0"

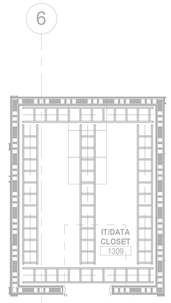

6 TECHNOLOGY ENLARGED PLAN - IT/DATA CLOSET 1309 - CABLE TRAY
1/4" = 1'-0"

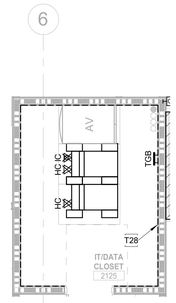

2 TECHNOLOGY ENLARGED PLAN - IT/DATA CLOSET 2125
1/4" = 1'-0"

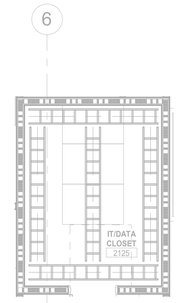

7 TECHNOLOGY ENLARGED PLAN - IT/DATA CLOSET 2125 - CABLE TRAY
1/4" = 1'-0"

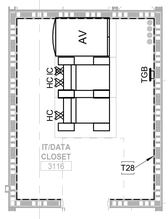

3 TECHNOLOGY ENLARGED PLAN - IT/DATA CLOSET 3116
1/4" = 1'-0"

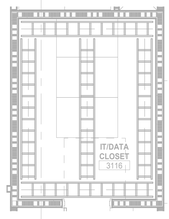

8 TECHNOLOGY ENLARGED PLAN - IT/DATA CLOSET 3116 - CABLE TRAY
1/4" = 1'-0"

20 FORENSICS I.T 3136
1/4" = 1'-0"

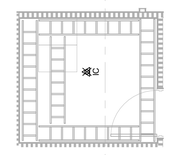

9 FORENSICS I.T 3136 - CABLE TRAY
1/4" = 1'-0"

GENERAL NOTES:

1. REFER TO SYMBOL LEGEND FOR ADDITIONAL REQUIREMENTS, INCLUDING BUT NOT LIMITED TO, INSTALLATION OF RACEWAY, CABLING, AND DEVICES.

2. CONTRACTOR SHALL COORDINATE ROUTING AND STUB-UP LOCATIONS FOR ALL LOW VOLTAGE SYSTEMS RISER CONDUIT OR TRAY DURING SHOP DRAWING PROCESS. REFER TO TECHNOLOGY RACEWAY ONE-LINE AND APPLICABLE FIRE ALARM AND AV DRAWINGS FOR ADDITIONAL REQUIREMENTS.

3. CONTRACTOR SHALL VERIFY AND COORDINATE ALL WALL SPACE REQUIREMENTS WITH OTHER LOW VOLTAGE TRADES (DAS, SECURITY, AV, FIRE ALARM, ETC.) DURING SHOP DRAWING PROCESS TO CONFIRM FINAL PLACEMENT OF ALL WALL TERMINATIONS AND EQUIPMENT.

4. RACK ELEVATIONS ARE SHOWN FOR REFERENCE ONLY TO INDICATE DESIRED RACK LAYOUT. CONTRACTOR SHALL VERIFY QUANTITIES OF PATCH PANELS, CABLE MANAGERS, ETC. BASED ON ACTUAL CABLE QUANTITIES FED TO/FROM EACH ROOM.

KEYNOTES	
T10	BLOCKOUT FOR INCOMING SERVICE CONDUIT.
T11	BLOCKOUT FOR CONDUIT PATHWAY TO ROOF.
T12	BLOCKOUT FOR CONDUIT TO COMMUNICATION CENTER.
T28	PLYWOOD BACKBOARD: PROVIDE 4' X 8' X 3/4" FIRE RESISTANT MARINE GRADE PLYWOOD BACKBOARD MOUNTED ON WALLS AT 6" AFF TO 102" AFF.
T30	FIXED SURFACE MOUNT SCREEN. COORDINATE WITH ARCHITECTURE AND AV ENGINNER ON EXACT MOUNTING LOCATION AND MOUNTING HEIGHT. PROVIDE PROJECTION ALIGNMENT CALCULATIONS IN SUBMITTAL SHOP DRAWINGS BASED ON LENS AND THROW DISTANCE.
T31	PROVIDE HDBT EXTENDER SET FOR HDMI TO DISPLAY. TRANSMITTER MOUNT AT TABLE. PROVIDE PASS THROUGH CABLES. COORDINATE WITH FURNITURE.
T34	RACK TO SERVE 911 AREA FOR IT CABLING.
T35	911 RACKS, DAY-1 + FUTURE.

BRINKLEY SARGENT WIGINTON ARCHITECTS

Architect: Brinkley Sargent Wigginton Architects (972) 960-9970
Landscape: Kendall Landscape Architecture (214) 739-3226
Structural: L.A. Fuess Partners, Inc (214) 593-1118
MEP: M-E Engineers (214) 741-1589
Civil: KSA Engineers, Inc (903) 236-7700
Technology: M-E Engineers (303) 421-6656

LONGVIEW POLICE DEPARTMENT

XXXX SOUTH ST. LONGVIEW, TEXAS 75601

History		
#	Date	Description

STATE OF TEXAS
ANDREW SHIVLEY
109010
LICENSED PROFESSIONAL ENGINEER
ME Engineers, Inc.
F-10231
08/19/2020

TECHNOLOGY ENLARGED PLANS

20513
08/19/2020
T400

BID ISSUE

8/17/2020 3:29:57 PM

C:\Revit Projects\2019\LPD_CENTRAL_719_Steven.Mowery@me-engineers.com.rvt

© 2020 Brinkley Sargent Wigginton Architects, Inc.

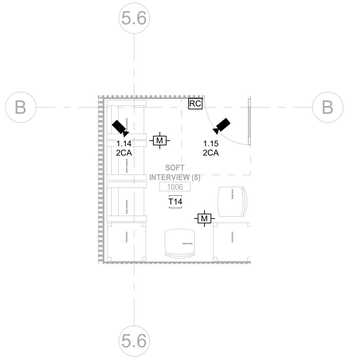

11 SOFT INTERVIEW (5)
1/4" = 1'-0"

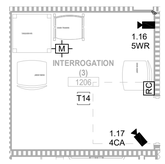

4 INTERROGATION (3)
1/4" = 1'-0"

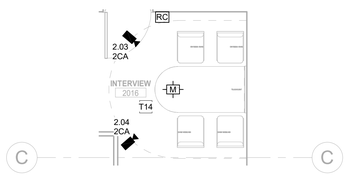

7 INTERVIEW 2016
1/4" = 1'-0"

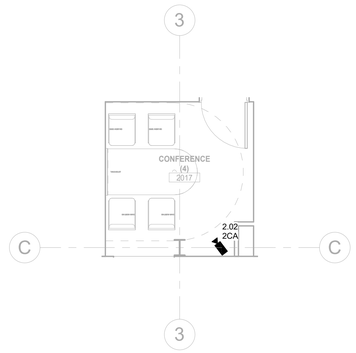

2 CONFERENCE (4)
1/4" = 1'-0"

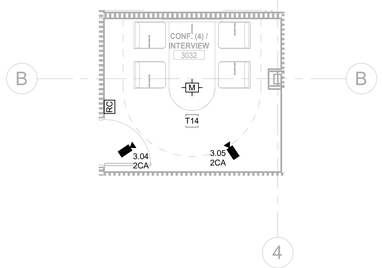

1 CONF.(4) / INTERVIEW
1/4" = 1'-0"

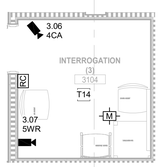

5 INTERROGATION (3) 3104
1/4" = 1'-0"

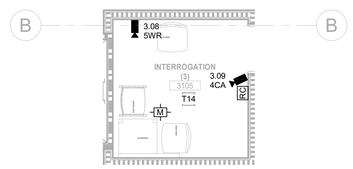

6 INTERROGATION (3) 3105
1/4" = 1'-0"

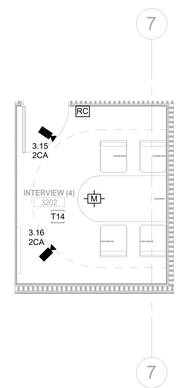

9 INTERVIEW (4)
1/4" = 1'-0"

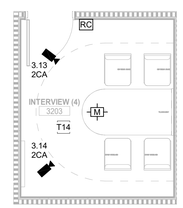

8 INTERVIEW 3203
1/4" = 1'-0"

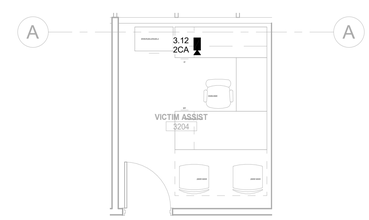

12 VICTIM ASSIST 3204
1/4" = 1'-0"

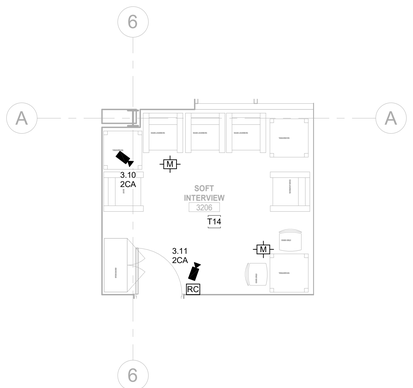

10 SOFT INTERVIEW 3206
1/4" = 1'-0"

GENERAL NOTES:

1. REFER TO SYMBOL LEGEND FOR ADDITIONAL REQUIREMENTS, INCLUDING BUT NOT LIMITED TO, INSTALLATION OF RACEWAY, CABLING, AND DEVICES.

2. CONTRACTOR SHALL COORDINATE ROUTING AND STUB-UP LOCATIONS FOR ALL LOW VOLTAGE SYSTEMS RISER CONDUIT OR TRAY DURING SHOP DRAWING PROCESS. REFER TO TECHNOLOGY RACEWAY ONE-LINE AND APPLICABLE FIRE ALARM AND AV DRAWINGS FOR ADDITIONAL REQUIREMENTS.

3. CONTRACTOR SHALL VERIFY AND COORDINATE ALL WALL SPACE REQUIREMENTS WITH OTHER LOW VOLTAGE TRADES (DAS, SECURITY, AV, FIRE ALARM, ETC.) DURING SHOP DRAWING PROCESS TO CONFIRM FINAL PLACEMENT OF ALL WALL TERMINATIONS AND EQUIPMENT.

4. RACK ELEVATIONS ARE SHOWN FOR REFERENCE ONLY TO INDICATE DESIRED RACK LAYOUT. CONTRACTOR SHALL VERIFY QUANTITIES OF PATCH PANELS, CABLE MANAGERS, ETC. BASED ON ACTUAL CABLE QUANTITIES FED TO/FROM EACH ROOM.

KEYNOTES

T14	SEPARATE VIDEO EVIDENCE SYSTEM PROVIDED AND INSTALLED BY LONGVIEW PD STAFF. PROVIDE ROUGH-IN ONLY FOR CAMERAS. SECURITY CONTRACTOR(S) SHALL CONFIRM FINAL INTERVIEW/INTERROGATION CAMERA PLACEMENT WITH THE ARCHITECT, ENGINEER AND POLICE/DISTRICT ATTORNEY DURING THE SECURITY SHOP DRAWING REVIEW PROCESS, PRIOR TO INSTALLATION.

BRINKLEY SARGENT WIGINTON ARCHITECTS

Architect: Brinkley Sargent Wigginton Architects (972) 960-9970
Landscape: Kendall Landscape Architecture (214) 739-3226
Structural: L.A. Fuess Partners, Inc (214) 593-1118
MEP: M-E Engineers (214) 741-1589
Civil: KSA Engineers, Inc (903) 236-7700
Technology: M-E Engineers (303) 421-6656

LONGVIEW POLICE DEPARTMENT

XXXX SOUTH ST. LONGVIEW, TEXAS 75601

History

#	Date	Description

INTERIM REVIEW ONLY
THESE DOCUMENTS ARE INCOMPLETE, AND ARE RELEASED FOR INTERIM REVIEW ONLY. THESE DOCUMENTS ARE NOT INTENDED FOR REGULATORY APPROVAL, BIDDING, PERMIT, OR CONSTRUCTION.
ENGINEER: ANDREW SHIVLEY
ENG. LIC. NO.: 109010
DATE: 03/27/20
FIRM NO.: F-10231

08/19/2020

TECHNOLOGY ENLARGED PLANS

20513
08/19/2020
T401

BID ISSUE

8/17/2020 2:30:52 PM
C:\Revit Projects\2015\LPD_CENTRAL_F15_Steven.Moyer@me-engineers.com.rvt

© 2020 Brinkley Sargent Wiginton Architects, Inc.

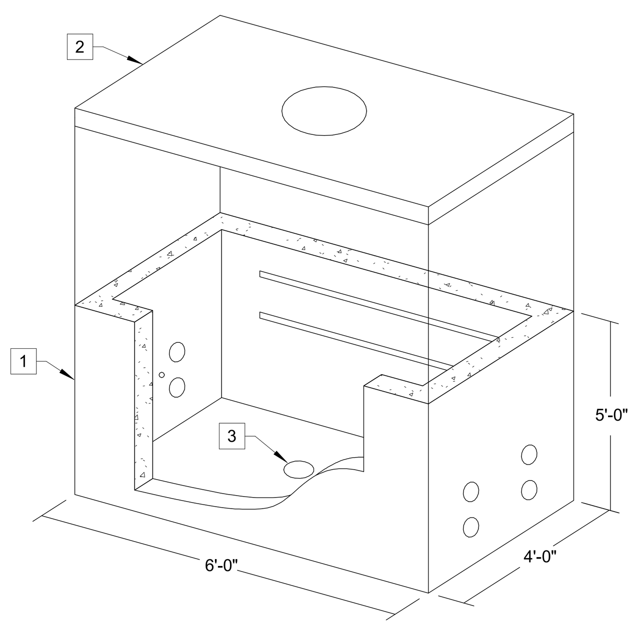

GENERAL NOTES:

1. REFER TO BASIS OF DESIGN PRODUCT TO CONFIRM ADDITIONAL REQUIREMENTS SUCH AS QUANTITY, SIZE AND RATING OF UNI-STRUT, PULLING INSERTS, ETC.

KEYNOTES: #

1. HAND-HOLE: PROVIDE 6'-0"L X 4'-0"W X 5'-0"D CONCRETE COMMUNICATIONS HAND-HOLE COMPLETE WITH PULLING INSERT AND HOLES TO ACCOMMODATE UP TO (4) 4-INCH CONDUITS AT EACH END.
2. COVER: PROVIDE TRAFFIC RATED COVER THAT INCLUDES "COMMUNICATIONS" LABEL ON COVER.
3. SUMP: HAND-HOLE TO INCLUDE 12" DIAMETER BY 4" DEEP SUMP RECESS.

U.02 COMMUNICATIONS HAND-HOLE DETAIL

SYMBOLS:

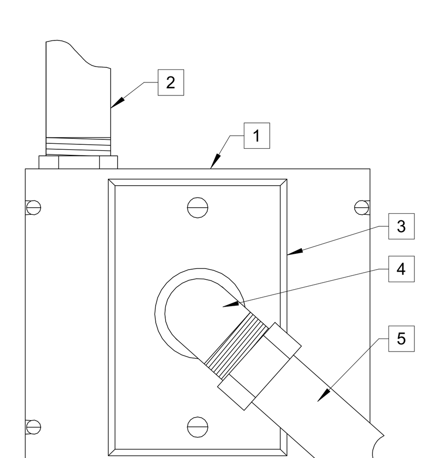

GENERAL NOTES:

1. REFER TO SYSTEM SYMBOL LEGEND - PATHWAY REQUIREMENT NOTES TO CONFIRM IF CONDUIT STUBS TO CEILING AND USE OF J-HOOKS IS ALLOWED OR IF CONTINUOUS CONDUIT IS REQUIRED FOR ALL LOCATIONS. PARTICULAR ATTENTION SHALL BE GIVEN TO CONDUIT ROUTING NOTES AS EACH SYSTEM (AV, COMM, SECURITY, ETC.) HAS SPECIFIC CONDUIT ROUTING REQUIREMENTS.

KEYNOTES: #

1. BACK-BOX: PROVIDE 4-11/16" X 4-11/16 "X 3-1/4" (HUBBEL 260) FLUSH MOUNTED BOX WITH SINGLE GANG COVER PLATE.
2. CONDUIT: PROVIDE (1) 1-1/2" CONDUIT FOR LOW VOLTAGE CABLE.
3. FACE PLATE: STAINLESS STEEL COVER PLATE WITH CENTER MOUNTED GROMMET OPENING.
4. CONDUIT FITTING: PROVIDE (1) 90-DEGREE CONDUIT FITTING FOR FURNITURE CONNECTOR.
5. FLEXIBLE DUCT FEED: PROVIDE (1) 1-1/2" POLYTUFF FLEXIBLE CONDUIT EXTENDED TO MODULAR FURNITURE.

R.04 WALL MOUNTED FURNITURE FEED DEVICE

SYMBOLS:

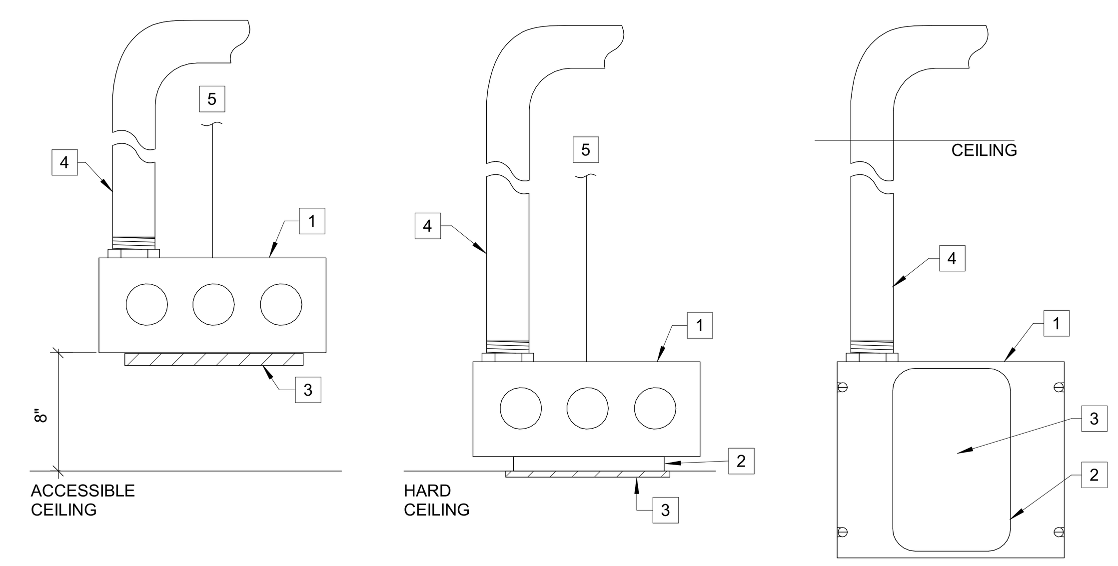

ABOVE CEILING MOUNTED

FLUSH CEILING MOUNTED

WALL MOUNTED

GENERAL NOTES:

1. REFER TO SYSTEM SYMBOL LEGEND - PATHWAY REQUIREMENT NOTES TO CONFIRM IF CONDUIT STUBS TO CEILING AND USE OF J-HOOKS IS ALLOWED OR IF CONTINUOUS CONDUIT IS REQUIRED FOR ALL LOCATIONS. PARTICULAR ATTENTION SHALL BE GIVEN TO CONDUIT ROUTING NOTES AS EACH SYSTEM (AV, COMM, SECURITY, ETC.) HAS SPECIFIC CONDUIT ROUTING REQUIREMENTS.

KEYNOTES: #

1. BACK-BOX: PROVIDE 4"X4"X2-1/8" FLUSH MOUNTED BOX.
2. MUD-RING: PROVIDE 1-GANG MUD RING FOR MOUNTING OF DEVICE / FACEPLATE. MUD RING SHALL BE SEPARATE COMPONENT FROM BACK-BOX.
3. FACE PLATE: REQUIREMENTS VARY, REFER TO SPECIFIC DEVICE DETAILS FOR ADDITIONAL INFORMATION.
4. CONDUIT: PROVIDE CONDUIT SIZED AS FOLLOWS:
   (1) 1-INCH CONDUIT FOR (1-4) CABLES/PORTS
   (1) 1-1/4-INCH CONDUIT FOR (5-6) CABLES/PORT
5. SUPPORT: PROVIDE THREADED ROD ATTACHED TO STRUCTURE ABOVE.

R.01 COMM RACEWAY DEVICES

SYMBOLS: X X

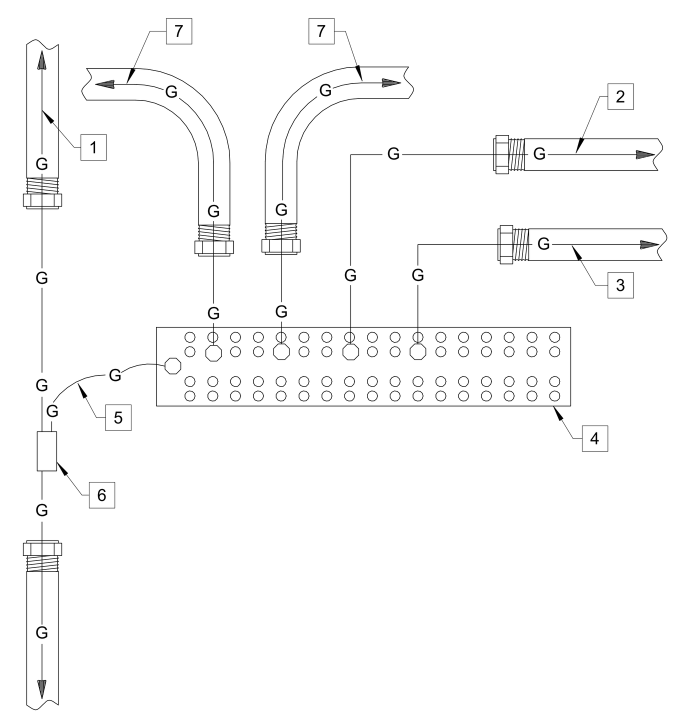

KEYNOTES: #

1. RISER-TBB: PROVIDE (1) #3/0 AWG INSULATED STRANDED COPPER CONDUCTOR VERTICALLY TO THE FURTHEST RISER TGB FROM TMGB. CABLE SHALL BE INSTALLED IN 1" (25mm) CONDUIT.
2. PROVIDE (1) #3/0 AWG INSULATED STRANDED COPPER CONDUCTOR BONDED TO NEAREST BUILDING STRUCTURAL STEEL. CABLE SHALL BE INSTALLED IN 1-INCH CONDUIT, IF ROUTED OUTSIDE OF ROOM.
3. PROVIDE (1) #3/0 AWG INSULATED STRANDED COPPER CONDUCTOR BONDED TO NEAREST ELECTRICAL PANEL GROUND BUS. CABLE SHALL BE INSTALLED IN 1-INCH CONDUIT.
4. TGB: PROVIDE (1) 20" X 4" X 1/4" TINNED COPPER BUS ON ISOLATED STAND-OFF INSULATORS. GROUND BUS SHALL HAVE PRE-DRILLED HOLES FOR DUAL HOLE MOUNTING LUGS.
5. TAP CONDUCTOR: PROVIDE (1) #3/0 AWG INSULATED STRANDED COPPER CONDUCTOR FROM TBB TO THE TGB. CABLE SHALL BE ROUTED IN 1" (25mm) CONDUIT IF ROUTED OUTSIDE OF ROOM IN RETURN AIR PLENUM OR EXPOSED TO PUBLIC VIEW.
6. TAP FITTING: PROVIDE IRREVERSIBLE HIGH COMPRESSION FITTING.
7. TELECOMMUNICATIONS GROUNDING EQUALIZER: (1) # 3/0 AWG INSULATED STRANDED COPPER CONDUCTORS HORIZONTALLY INTERCONNECTING TELECOMMUNICATIONS GROUND BUS (TGB) ON SELECT LEVELS, AS INDICATED ON GROUNDING ONE-LINE. CABLE SHALL BE INSTALLED IN 1" (25mm) CONDUIT IF INSTALLED IN RETURN AIR PLENUM OR EXPOSED TO PUBLIC VIEW.

G.01 TELECOM GROUND BUSBAR (TGB)

SYMBOLS: TGB I-TGB

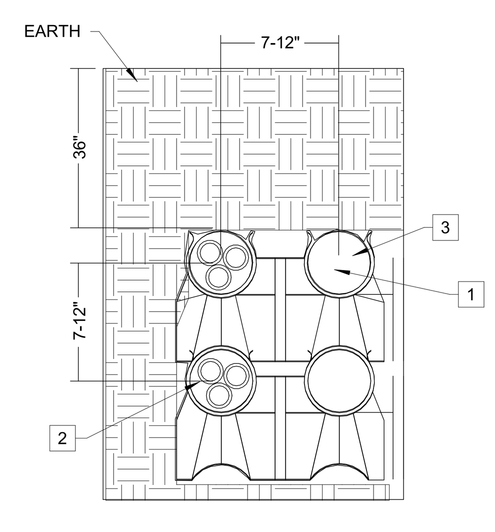

GENERAL NOTES:

1. CONDUITS QUANTITIES AND SIZES ARE SHOWN FOR REFERENCE ONLY TO HELP REPRESENT TYPICAL INSTALLATION REQUIREMENTS. REFER TO SITE PLAN AND RACEWAY ONE-LINE FOR SPECIFIC CONDUIT QUANTITIES AT EACH LOCATION.
2. MAINTAIN MINIMUM OF 12-INCH CLEAR SEPARATION BETWEEN ELECTRICAL AND COMMUNICATIONS CONDUITS.
3. CONDUIT DEPTH SHOWN IS MINIMUM MOUNTING DEPTH TO TOP OF CONDUITS. CONDUITS SHALL BE SLOPED GRADUALLY AWAY FROM BUILDING.
4. EXCAVATION OF CONDUIT SHALL BE GRADUALLY SLOPED TO MEET 10:1 BEND RADIUS OF CONDUIT TURNS UP INTO COMM ROOMS. A MINIMUM OF 30-FEET SHALL BE PROVIDED PRIOR TO TURNING UP.

KEYNOTES: #

1. PROVIDE 4-INCH RIGID PVC CONDUIT FOR INCOMING SERVICE.
2. PROVIDE INNER DUCT WITHIN SELECT CONDUITS AS REQUIRED PER SITE PLAN AND/OR RACEWAY ONE-LINE NOTES.
3. PROVIDE DUCT SPACERS (TYPICAL).

U.01 COMMUNICATIONS DUCT BANK DETAIL

SYMBOLS:

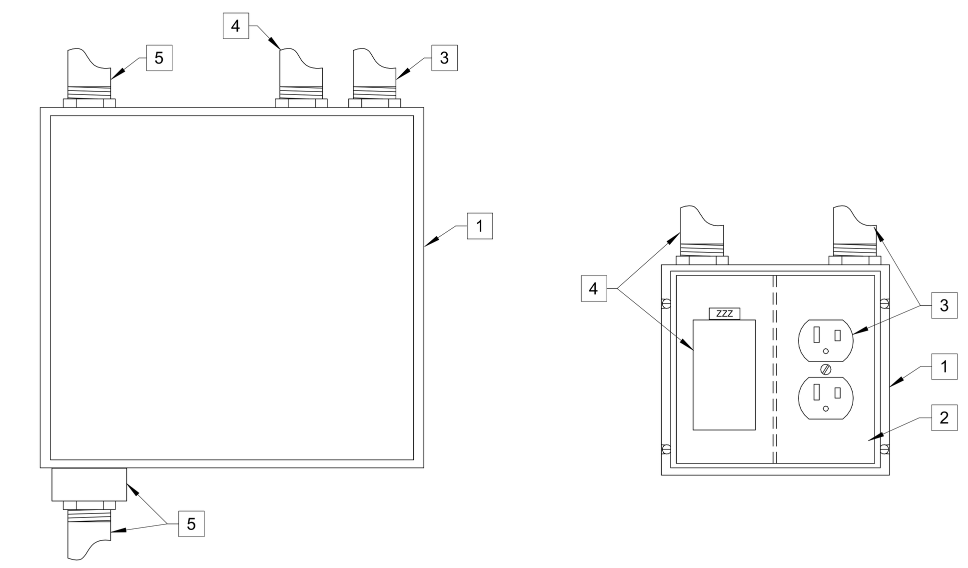

GENERAL NOTES:

1. REFER TO AV DOCUMENTS FOR ADDITIONAL REQUIREMENTS RELATIVE TO TV / VIDEO MONITOR INFRASTRUCTURE.
2. REFER TO ARCHITECTURAL AND/OR AV DOCUMENTS FOR MOUNTING HEIGHTS AND/OR SPECIAL CONDITIONS.

KEYNOTES: #

1. BACK-BOX: PROVIDE CUSTOM FLAT PANEL BACK-BOX AT ALL LOCATIONS AS INDICATED IN AV DOCUMENTS. PROVIDE STANDARD 4"X4"X2-1/8" BACK-BOX WITH DIVIDER FOR ALL OTHER TV / VIDEO MONITOR LOCATIONS.
2. FACE PLATE: PROVIDE 2-GANG FACE PLATE WITH RECTANGULAR (STYLE-LINE) OPENING FOR LOW VOLTAGE TERMINATIONS.
3. POWER RACEWAY: PROVIDE 3/4-INCH CONDUIT TO POWER COMPARTMENT.
4. DATA/COAX RACEWAY: PROVIDE 1-INCH CONDUIT TO DATA/COAX COMPARTMENT. REFER TO COMMUNICATION LEGEND - PATHWAY REQUIREMENT NOTES TO CONFIRM IF CONDUIT STUBS TO CEILING AND USE OF J-HOOKS IS ALLOWED OR IF CONTINUOUS CONDUIT IS REQUIRED FOR ALL LOCATIONS
5. AV RACEWAY: REFER TO AV DRAWINGS FOR ADDITIONAL REQUIREMENTS ON CUSTOM BACK-BOX AND CONDUIT TO AV COMPARTMENT(S). REFER TO AUDIOVISUAL LEGEND - PATHWAY REQUIREMENT NOTES TO CONFIRM IF CONDUIT STUBS TO CEILING AND USE OF J-HOOKS IS ALLOWED OR IF CONTINUOUS CONDUIT IS REQUIRED FOR ALL LOCATIONS

R.02 TV POWER / LOW VOLTAGE DEVICE

SYMBOLS: V V

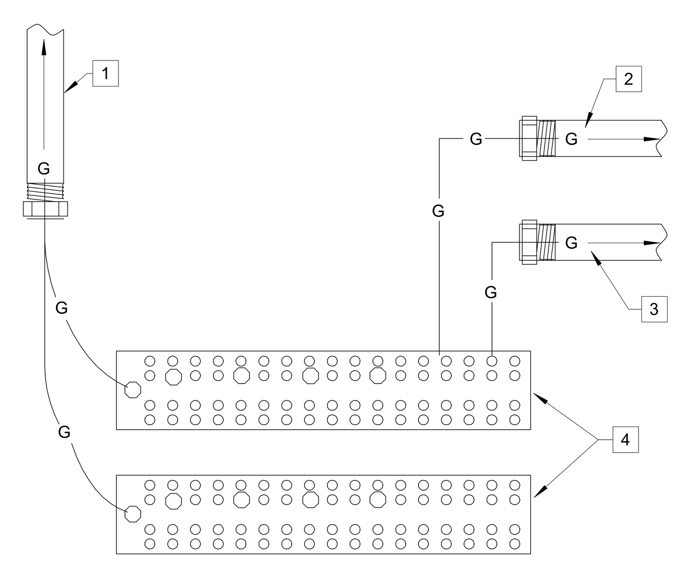

KEYNOTES: #

1. RISER-TBB: PROVIDE (1) #3/0 AWG INSULATED STRANDED COPPER CONDUCTOR VERTICALLY TO THE FURTHEST RISER TGB FROM TMGB. CABLE SHALL BE INSTALLED IN 1" (25mm) CONDUIT.
2. PROVIDE (1) #3/0 AWG INSULATED STRANDED COPPER CONDUCTOR BONDED TO NEAREST BUILDING STRUCTURAL STEEL. CABLE SHALL BE INSTALLED IN 1-INCH CONDUIT, IF ROUTED OUTSIDE OF ROOM.
3. PROVIDE (1) #3/0 AWG INSULATED STRANDED COPPER CONDUCTOR BONDED TO MAIN ELECTRICAL SERVICE GROUND BUS. CABLE SHALL BE INSTALLED IN 1" (25mm) CONDUIT.
4. TMGB: PROVIDE (2) 20" X 4" X 1/4" TINNED COPPER BUS ON ISOLATED STAND-OFF INSULATORS. GROUND BUS SHALL HAVE PRE-DRILLED HOLES FOR DUAL HOLE MOUNTING LUGS.

G.02 TELECOM GROUND BUSBAR (TMGB)

SYMBOLS: TMGB

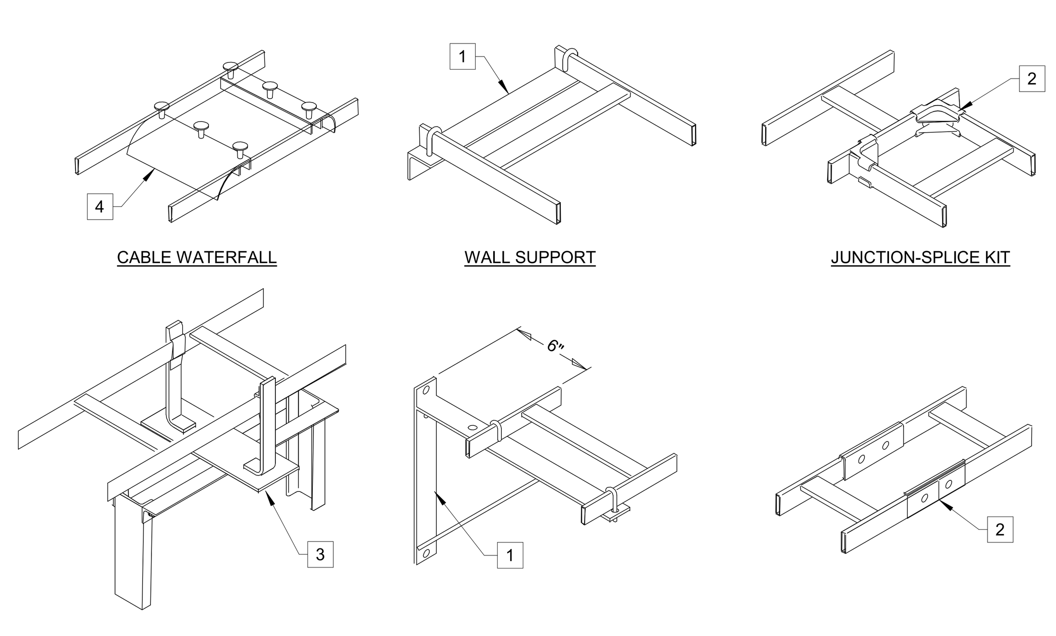

CABLE WATERFALL

WALL SUPPORT

JUNCTION-SPLICE KIT

RAISED MOUNT

SUPPORT BRACKET (TRIANGULAR)

BUTT-SPICE KIT

GENERAL NOTES:

1. PROVIDE ALL NECESSARY CABLE TRAY COMPONENTS AND ACCESSORIES PER SPECIFICATIONS AND MANUFACTURER REQUIREMENTS. REFER TO PLAN DRAWINGS AND WRITTEN SPECIFICATIONS FOR ADDITIONAL INFORMATION.
2. PROVIDE #6 AWG GROUNDING CONDUCTOR FROM LADDER RACK TO TGB IN ROOM. PROVIDE GROUNDING JUMPERS AS NECESSARY TO GROUND ALL SEGMENTS OF LADDER RACK.
3. REFER TO ENLARGED EQUIPMENT ROOM PLANS FOR LADDER RACK LAYOUTS.

KEYNOTES: #

1. WALL SUPPORT: PROVIDE TRIANGULAR WALL SUPPORT BRACKET AND/OR END WALL SUPPORT BRACKET AS REQUIRED.
2. JUNCTION SPLICE: PROVIDE JUNCTION-SPLICE AND/OR BUTT-SPLICE AS REQUIRED.
3. RACK SUPPORT: PROVIDE RAISED MOUNT TYPE SUPPORT BRACKET TO SECURE LADDER RACK TO EQUIPMENT RACK FOR ADDITIONAL RACK STABILITY.
4. WATER FALL: PROVIDE CENTER OR SIDE EXIT LADDER RACK WATER FALLS AT EACH EQUIPMENT RACK OR CABINET.

T.01 EQUIPMENT ROOM WIRE RUNWAY

SYMBOLS:

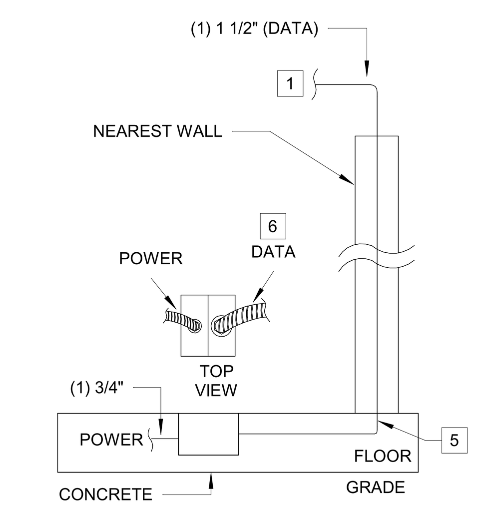

FLOOR BOX FURN. FEED (DATA)

BASIS OF DESIGN: LEGRAND EFBFF-OG
SYMBOLS:

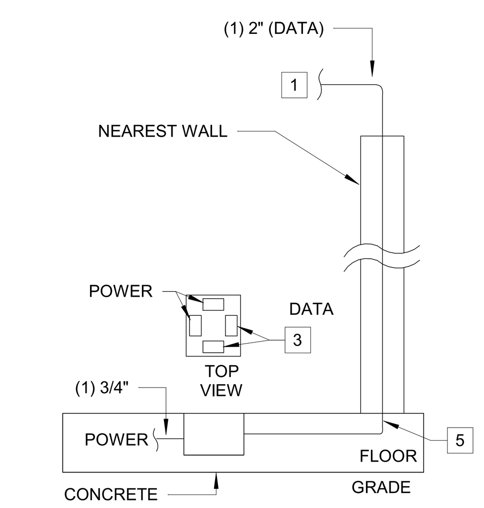

FLOOR BOX DEVICE (DATA)

BASIS OF DESIGN: LEGRAND RFB4E-OG
SYMBOLS: #

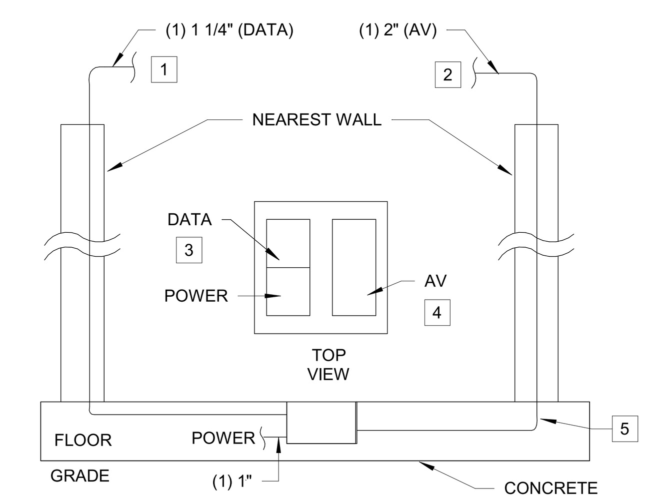

FLOOR BOX DEVICE (DATA & AV)

BASIS OF DESIGN: LEGRAND EFB8S-OG
SYMBOLS: AV/#

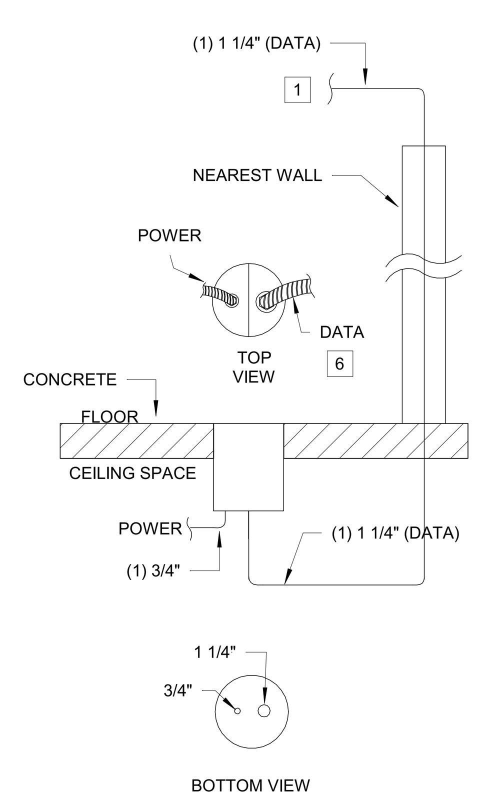

POKE THRU FURN. FEED DEVICE (DATA)

BASIS OF DESIGN: LEGRAND 4FFATC
SYMBOLS:

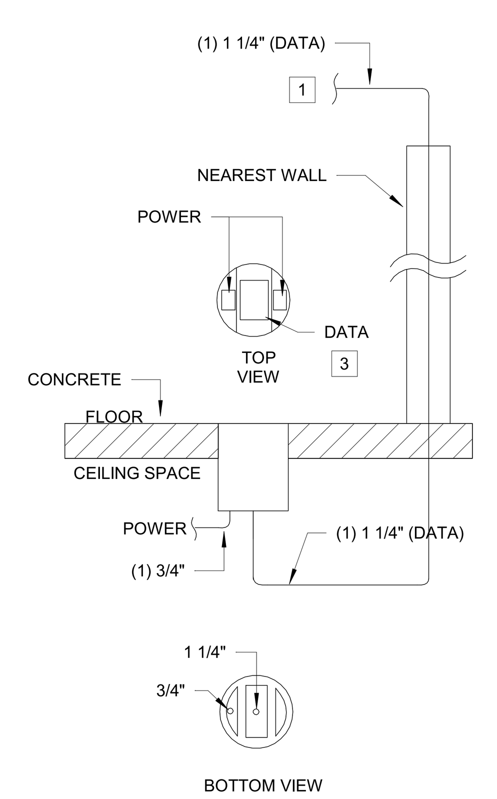

POKE THRU DEVICE (DATA)

BASIS OF DESIGN: LEGRAND 6AT
SYMBOLS: #

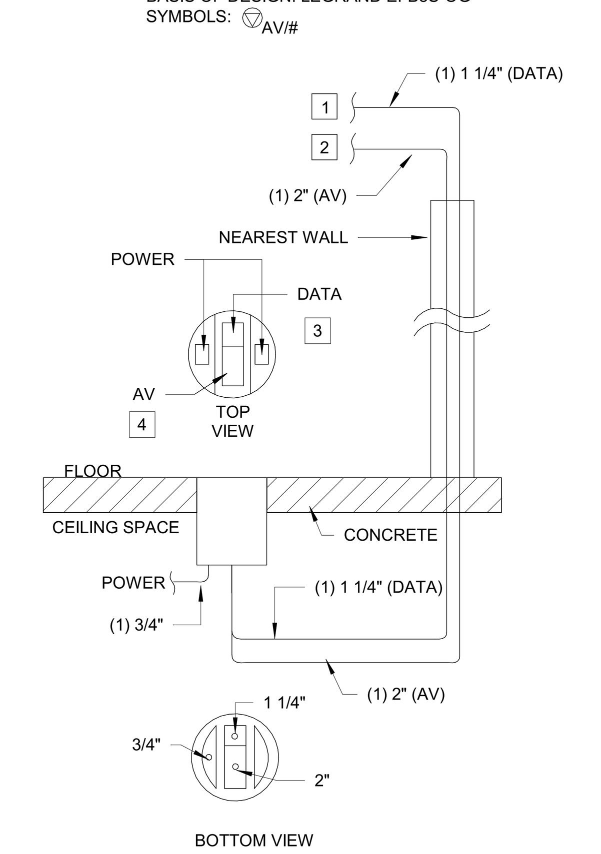

POKE THRU DEVICE (DATA & AV)

BASIS OF DESIGN: LEGRAND 8AT
SYMBOLS: AV/#

GENERAL NOTES

1. FLOOR BOX DETAILS ARE SCHEMATIC IN NATURE AND DEPICT COMMON PATHWAY REQUIREMENTS. INSTALLATION REQUIREMENTS MAY VARY BASED ON FIELD CONDITION SUCH AS WALL TYPE.
2. FLOOR BOX DEVICES SHALL BE INSTALLED WITHIN FLOORS THAT RESIDE ON GRADE. ENCASE ENTIRE FLOOR BOX AND CONDUIT WITHIN CONTRETE SLAB. IN CASES WHERE THE FLOOR SLAB THICKNESS DOES NOT SUPPORT SPECIFIED FLOOR BOX DEPTH, PROVIDE ADDITIONAL TRENCHING AS REQUIRED TO ENCASE FLOOR BOX AND CONDUIT. COORDINATE ALL FINAL LOCATION WITH ARCHITECTURAL AND DIVISION 03 PRIOR TO INSTALL.
3. POKE THRU DEVICES SHALL BE INSTALLED WITHIN FLOORS CAPABLE OF PROVIDING A CORE OPENING ACCORDING TO MANUFACTURER'S REQUIREMENTS. FLOOR SHALL NOT BE AT GRADE LEVEL AND SHALL HAVE AN ACCESSIBLE LEVEL BELOW. PROVIDE FIRE RATING APPROPRIATE TO FLOOR FIRE RATING, REFER TO DIVISION 7.
4. BASIS OF DESIGN (BOD) PRODUCT INFORMATION IS BASED ON A COORDINATED SOLUTION FOR ALL SYSTEMS. ANY PRODUCT SUBSTITUTIONS SHALL BE APPROVED BY LOW VOLTAGE ENGINEER PRIOR TO INSTALLATION TO ENSURE DESIGN INTENT IS MET.
5. REFER OT ELECTRICAL DOCUMENTS FOR ALL POWER REFERENCES.

KEYNOTES #

1. REFER TO COMMUNICATION LEGEND - PATHWAY REQUIREMENT NOTES FOR CONDUIT CONTINUATION REQUIREMENTS.
2. REFER TO AUDIOVISUAL LEGEND - PATHWAY REQUIREMENT NOTES FOR CONDUIT CONTINUATION REQUIREMENTS.
3. DATA OUTLETS: REFER TO DETAIL C.05 FOR DATA TERMINATION REQUIREMENTS. PROVIDE STYLE-LINE (DECORA) FRAME AT EACH DATA COMPARTMENT.
4. AV OUTLETS: PROVIDE APPROPRIATE ACCESSORIES FOR AV OUTLET TYPE AND QUANTITY AS REQUIRED PER AV DOCUMENTS. IN CASE WHERE HD-BASE-T TRANSMITTER IS LOCATED WITHIN DEVICE, UTILIZE STAND OFFS TO PROVIDE INSTALL SPACE AND HEAT DISSIPATION AS NECESSARY.
5. CONDUIT BENDS: IF FLOOR DEPTH IS NOT SUFFICIENT TO ACCOMIDATE CONDUIT BEND RADIUS, A HORIZONTAL 90 DEGREE BEND CAN BE UTILIZED TO PUT CONDUIT IN LINE WITH WALL SECTION IN ORDER TO BEND CONDUIT VERTICALLY INTO WALL. TOTAL CONDUIT BENDS SHALL NOT EXCEED (3) 90 DEGREE BENDS BEFORE PULL BOX IS UTILIZED.
6. FLEXIBLE WHIP: PROVIDE 1 1/4-INCH FLEXIBLE CONDUIT WHIP EXTENDED FROM COVER PLATE TO MODULAR FURNITURE.

R.03 FLOOR DEVICE DETAILS

SYMBOLS: SYMBOLS SHOWN ABOVE

BRINKLEY SARGENT WIGINTON ARCHITECTS

Architect: Brinkley Sargent Wiginton Architects (972) 960-9970
Landscape: Kendall Landscape Architecture (214) 739-3226
Structural: L.A. Fuess Partners, Inc (214) 593-1118
MEP: M-E Engineers (214) 741-1589
Civil: KSA Engineers, Inc (903) 236-7700
Technology: M-E Engineers (303) 421-6656

LONGVIEW POLICE DEPARTMENT

XXXX SOUTH ST. LONGVIEW, TEXAS 75601

History		
#	Date	Description

STATE OF TEXAS
ANDREW SHIVLEY
109010
LICENSED
PROFESSIONAL ENGINEER
ME Engineers, Inc.
F-10231
08/19/2020

TECHNOLOGY DETAILS

20513
08/19/2020
T501

BID ISSUE

C:\Revit Projects\2019\LPD_CENTRAL_T19_Steven.Maxwell@me-engineers.com.rvt 8/17/2020 2:30:04 PM

© 2020 Brinkley Sargent Wigginton Architects, Inc.

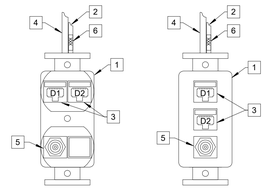

106-STYLE FRAME STYLE-LINE FRAME

GENERAL NOTES:

1. MOUNTING FRAMES TO BE PROVIDED FOR MOUNTING LOW VOLTAGE TERMINATIONS IN TV WALL BOXES, FLOOR BOXES, MODULAR FURNITURE, WIREMOLD RACEWAY AND ANY CUSTOM BOXES OR ENCLOSURES.
2. PROVIDE MODULAR DUST COVER(S) ON ALL UNUSED FACEPLATE PORTS AS REQUIRED.

KEYNOTES: #

1. MOUNTING FRAME: PROVIDE 106-STYLE OR RECTANGULAR (STYLE-LINE/DECORA) MODULAR MOUNTING FRAME TO SECURE LOW VOLTAGE TERMINATIONS INTO FACE PLATE OPENING. VERIFY STYLE REQUIREMENT BASED ON SELECTED FACEPLATE STYLE FOR EACH RESPECTIVE DEVICE TYPE.
2. DATA CABLE: PROVIDE 4-PAIR UTP CABLE(S) ORIGINATING FROM THE NEAREST HORIZONTAL CROSS-CONNECT (HC). REFER TO DEVICE SYMBOL AND LEGEND DESCRIPTION FOR CABLE QUANTITIES.
3. DATA TERMINATIONS: PROVIDE RJ45 TYPE MODULAR JACK INTERCONNECTED TO EACH UTP CABLE.
4. COAX CABLE: PROVIDE (1) RG-6 OR RG-11 COAXIAL CABLE ORIGINATING FROM THE NEAREST SPLITTER/TAP. REFER TO CATV ONE-LINE DIAGRAM FOR ADDITIONAL INFORMATION.
5. COAX TERMINATIONS: PROVIDE F-TYPE CONNECTOR INTERCONNECTED TO EACH COAXIAL CABLE.
6. LABELS: PROVIDE WHITE LABELS WITH BLACK TEXT TO NOTE STATION ID (YYY), TERMINATION ID (ZZZ) AND CABLE ID (XXX). REFER TO TYPICAL DEVICE LABELING DETAIL FOR ADDITIONAL REQUIREMENTS.

C.05 MOUNTING FRAME DATA / COAX DEVICE

SYMBOLS: # # V/#

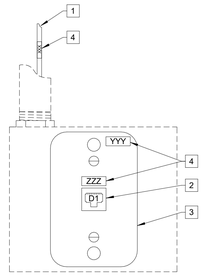

GENERAL NOTES:

1. REFER TO DETAIL R.01 FOR RACEWAY REQUIREMENTS INCLUDING BACK-BOX AND CONDUIT.

KEYNOTES: #

1. DATA CABLE: PROVIDE (1) 4-PAIR UTP CABLE ORIGINATING FROM THE NEAREST COMMUNICATIONS ROOM.
2. DATA TERMINATIONS: PROVIDE RJ45 TYPE MODULAR JACK INTERCONNECTED TO UTP CABLE.
3. FACE PLATE: PROVIDE WALL MOUNTED MODULAR TELEPHONE TYPE FACE PLATE WITH MOUNTING PEGS.
4. LABELS: PROVIDE WHITE LABELS WITH BLACK TEXT TO NOTE STATION ID (YYY), TERMINATION ID (ZZZ) AND CABLE ID (XXX). REFER TO TYPICAL DEVICE LABELING DETAIL FOR ADDITIONAL REQUIREMENTS.

C.01 WALL PHONE DEVICE

SYMBOLS: W

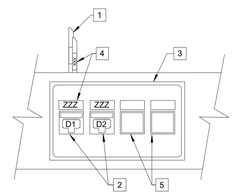

GENERAL NOTES:

1. REFER TO DETAILS R.04 AND R.03 FOR RACEWAY REQUIREMENTS INCLUDING FLOOR BOX / BACK-BOX AND CONDUIT.
2. PROVIDE MODULAR DUST COVER(S) ON ALL UNUSED FACEPLATE PORTS AS REQUIRED.

KEYNOTES: #

1. DATA CABLE: PROVIDE 4-PAIR UTP CABLE(S) ORIGINATING FROM THE NEAREST HORIZONTAL CROSS-CONNECT (HC).
2. DATA TERMINATIONS: PROVIDE RJ45 TYPE MODULAR JACK INTERCONNECTED TO EACH UTP CABLE.
3. FACE PLATE: PROVIDE SURFACE MOUNT MODULAR FACEPLATE WITH PORTS AS REQUIRED PER CABLE COUNTS.
4. LABELS: PROVIDE WHITE LABELS WITH BLACK TEXT TO NOTE CABLE ID (XXX) AND TERMINATION ID (ZZZ). REFER TO TYPICAL DEVICE LABELING DETAIL FOR ADDITIONAL REQUIREMENTS.
5. KNOCKOUT: LOW VOLTAGE OPENING IN MODULAR FURNITURE (SHOWN FOR REFERENCE ONLY.)

C.06 MODULAR FURNITURE VOICE/DATA DEVICE

SYMBOLS: F F/2

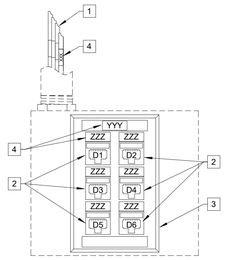

GENERAL NOTES:

1. REFER TO DETAIL R.01 FOR RACEWAY REQUIREMENTS INCLUDING BACK-BOX AND CONDUIT.
2. PROVIDE MODULAR DUST COVER(S) ON ALL UNUSED FACEPLATE PORTS AS REQUIRED.

KEYNOTES: #

1. DATA CABLE: PROVIDE 4-PAIR UTP CABLE(S) ORIGINATING FROM THE NEAREST HORIZONTAL CROSS-CONNECT (HC). REFER TO DEVICE SYMBOL AND LEGEND DESCRIPTION FOR CABLE QUANTITIES.
2. DATA TERMINATIONS: PROVIDE RJ45 TYPE MODULAR JACK INTERCONNECTED TO EACH UTP CABLE. PROVIDE COLORED PORTS ACCORDING TO THE COLOR SCHEDULE ON THE LEGEND SHEET.
3. FACE PLATE: PROVIDE MODULAR FACEPLATE WITH PORTS AS REQUIRED PER CABLE COUNTS.
4. LABELS: PROVIDE WHITE LABELS WITH BLACK TEXT TO NOTE STATION ID (YYY), TERMINATION ID (ZZZ) AND CABLE ID (XXX). REFER TO TYPICAL DEVICE LABELING DETAIL FOR ADDITIONAL REQUIREMENTS.

C.02 VOICE/DATA DEVICE (5 OR 6 PORTS)

SYMBOLS: # # ATM/# POS/# P AV

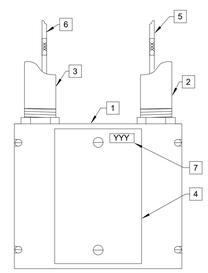

GENERAL NOTES:

1. REFER TO DEVICE SYMBOL AND LEGEND DESCRIPTION FOR ADDITIONAL INFORMATION.

KEYNOTES: #

1. BACK-BOX: PROVIDE 4"X4"X2-1/8" FLUSH MOUNTED BOX WITH SINGLE GANG COVER PLATE.
2. CONDUIT: PROVIDE (1) 1" CONDUIT FOR LOW VOLTAGE CABLE. REFER TO COMM ROUGH-IN DETAIL (R.XX) FOR CONDUIT CONTINUATION REQUIREMENTS.
3. CONDUIT: PROVIDE (1) 1" CONDUIT ROUTED TO ELEVATOR PANEL LOCATED WITHIN MACHINE ROOM.
4. FACE PLATE: PROVIDE BLANK FACE PLATE TO COVER J-BOX.
5. VOICE CABLE: PROVIDE 4-PAIR UTP CABLE(S) ORIGINATING FROM THE NEAREST HORIZONTAL CROSS-CONNECT (HC). REFER TO DEVICE SYMBOL AND LEGEND DESCRIPTION FOR CABLE QUANTITIES. CABLE(S) SHALL BE EXTENDED IN CONDUIT THROUGH J-BOX TO ELEVATOR PANEL FOR TERMINATION AND CONNECTION TO TRAVEL CABLE. (TRAVEL CABLE TO BE PROVIDED BY ELEVATOR MANUFACTURER.)
6. VOICE TERMINATIONS: TERMINATE CABLE IN PANEL ON COMMUNICATIONS LUGS PER ELEVATOR MANUFACTURER REQUIREMENTS. ALL FOUR PAIRS SHALL BE CROSS-CONNECTED TO THE TELECOMMUNICATIONS RISER/BACKBONE SYSTEM AT THE COMM ROOM. (CABLE TERMINAL DEVICE AND HANDSET FOR ELEVATOR CAB TO BE PROVIDED BY ELEVATOR MANUFACTURER.)

E.01 ELEVATOR / FIRE ALARM PANEL COMM DEVICE

SYMBOLS: E/#

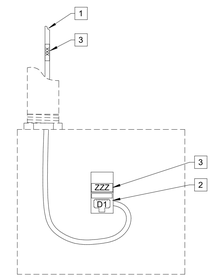

GENERAL NOTES:

1. INTENT OF THIS DETAIL IS TO DEPICT STRUCTURED CABLING REQUIREMENTS. REFER TO OTHER SYSTEMS DRAWINGS (AV, SECURITY, ETC.) FOR BACK-BOX REQUIREMENTS SPECIFIC TO EACH DEVICE TYPE. SELECT DEVICES MAY REQUIRE SPECIALIZED BACK-BOX TYPES, SIZES AND MOUNTING CONDITIONS.
2. CONTRACTOR TO PROVIDE DATA OUTLET(S) MOUNTED IN PLENUM RATED BISCUIT IN LIEU OF BACK-BOX FOR DEVICES LOCATED ABOVE ACCESSIBLE CEILINGS.

KEYNOTES: #

1. DATA CABLE: PROVIDE 4-PAIR UTP CABLE(S) ORIGINATING FROM THE NEAREST HORIZONTAL CROSS-CONNECT (HC). REFER TO DEVICE SYMBOL AND LEGEND DESCRIPTION FOR CABLE QUANTITIES.
2. DATA TERMINATIONS: PROVIDE RJ45 TYPE MODULAR JACK INTERCONNECTED TO EACH UTP CABLE. CABLE AND JACK SHALL REMAIN LOOSE INSIDE BACK-BOX.
3. LABELS: PROVIDE WHITE LABELS WITH BLACK TEXT TO NOTE STATION ID (YYY), TERMINATION ID (ZZZ) AND CABLE ID (XXX) ACTUAL LABELING SCHEME SHALL BE COORDINATED WITH THE OWNER AND ENGINEER. REFER TO COMMUNICATION AND CABLE DETAILS.

C.03 MISCELLANEOUS DATA DEVICE

SYMBOLS: CAM CAM CP C TR

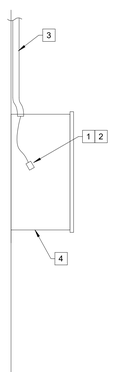

GENERAL NOTES:

1. REFER TO DEVICE SYMBOL NOTES ON TECHNOLOGY LEGEND TO CONFIRM IF CONDUIT STUBS TO CEILING AND USE OF J-HOOKS IS ALLOWED OR IF CONTINUOUS CONDUIT IS REQUIRED FOR ALL LOCATIONS.
2. ENCLOSURE IS SHOWN FOR REFERENCE ONLY. INTENT OF THIS DETAIL IS TO DEPICT RACEWAY AND STRUCTURED CABLING REQUIREMENTS.

KEYNOTES: #

1. DATA CABLE: PROVIDE 4-PAIR UTP CABLE(S) ORIGINATING FROM THE NEAREST HORIZONTAL CROSS-CONNECT (HC). REFER TO DEVICE SYMBOL AND LEGEND DESCRIPTION FOR CABLE QUANTITIES.
2. DATA TERMINATIONS: PROVIDE RJ45 TYPE MODULAR JACK INTERCONNECTED TO EACH UTP CABLE. CABLE AND JACK SHALL REMAIN LOOSE INSIDE BACK-BOX.
3. CONDUIT: PROVIDE CONDUIT SIZED AS FOLLOWS:
   (1) 3/4-INCH CONDUIT FOR (1) CABLES/PORT
   (1) 1-INCH CONDUIT FOR (2) CABLES/PORTS
   (1) 1-1/4-INCH CONDUIT FOR ANTENNA LMR CABLES
4. PROVIDE ALLOWANCE FOR NEMA ENCLOSURE (10" W x 12"H x 8"D). WI-FI VENDOR TO CONFIRM FINAL SIZE/TYPE SELECTION.

W.01 WALL / STRUCTURE MOUNTED WIRELESS ENCLOSURE

SYMBOLS: WLAN-E/# WLAN/#

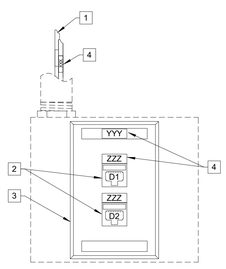

GENERAL NOTES:

1. REFER TO DETAIL R.01 FOR RACEWAY REQUIREMENTS INCLUDING BACK-BOX AND CONDUIT.
2. REFER TO WI-FI ENCLOSURE DETAILS AS APPLICABLE FOR REQUIREMENTS SPECIFIC TO WEATHER PROOF ENCLOSURES AND/OR CUSTOM STEALTH ENCLOSURES. INTENT OF THIS DETAIL IS TO DEPICT STRUCTURED CABLING REQUIREMENTS. PROVIDE DATA OUTLET(S) MOUNTED IN BISCUIT WITHIN WI-FI ENCLOSURES.
3. CONTRACTOR TO PROVIDE DATA OUTLET(S) MOUNTED IN PLENUM RATED BISCUIT IN LIEU OF BACK-BOX FOR DEVICES LOCATED ABOVE ACCESSIBLE CEILINGS.

KEYNOTES: #

1. DATA CABLE: PROVIDE 4-PAIR UTP CABLE(S) ORIGINATING FROM THE NEAREST HORIZONTAL CROSS-CONNECT (HC). REFER TO DEVICE SYMBOL AND LEGEND DESCRIPTION FOR CABLE QUANTITIES.
2. DATA TERMINATIONS: PROVIDE RJ45 TYPE MODULAR JACK INTERCONNECTED TO EACH UTP CABLE. CABLE AND JACK SHALL REMAIN LOOSE INSIDE BACK-BOX.
3. FACE PLATE: FACE PLATE: PROVIDE MODULAR FACEPLATE WITH PORTS AS REQUIRED PER CABLE COUNTS.
4. LABELS: PROVIDE WHITE LABELS WITH BLACK TEXT TO NOTE STATION ID (YYY), TERMINATION ID (ZZZ) AND CABLE ID (XXX). REFER TO TYPICAL DEVICE LABELING DETAIL FOR ADDITIONAL REQUIREMENTS.

C.04 WIRELESS LAN (WI-FI) DATA DEVICE

SYMBOLS: WLAN/# WLAN/#

BRINKLEY SARGENT WIGINTON ARCHITECTS

Architect: Brinkley Sargent Wigginton Architects (972) 960-9970
Landscape: Kendall Landscape Architecture (214) 739-3226
Structural: L.A. Fuess Partners, Inc (214) 593-1118
MEP: M-E Engineers (214) 741-1589
Civil: KSA Engineers, Inc (903) 236-7700
Technology: M-E Engineers (303) 421-6656

LONGVIEW POLICE DEPARTMENT

XXXX SOUTH ST. LONGVIEW, TEXAS 75601

History		
#	Date	Description

STATE OF TEXAS
ANDREW SHIVLEY
109010
LICENSED
PROFESSIONAL ENGINEER
ME Engineers, Inc.
F-10231
08/19/2020

TECHNOLOGY DETAILS

20513
08/19/2020

T502

BID ISSUE

8/17/2020 2:50:06 PM
C:\Revit Projects\2019\LPD_CENTRAL_119_Steven.Maxwell@me-engineers.com.rvt

© 2020 Brinkley Sargent Wigginton Architects, Inc.

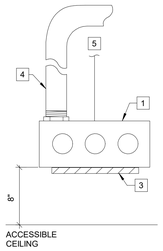

ABOVE CEILING MOUNTED

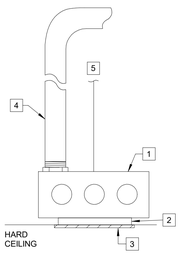

FLUSH CEILING MOUNTED

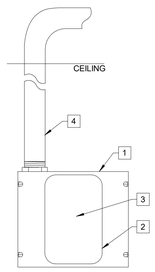

WALL MOUNTED

GENERAL NOTES:

1. REFER TO DEVICE SYMBOL NOTES ON TECHNOLOGY LEGEND TO CONFIRM IF CONDUIT STUBS TO CEILING AND USE OF J-HOOKS IS ALLOWED OR IF CONTINUOUS CONDUIT IS REQUIRED FOR ALL LOCATIONS.
2. REFER TO ADDITIONAL SECURITY DETAILS (CAMERA MOUNTING TYPES, DOOR DETAILS, ETC.) FOR ADDITIONAL INFORMATION.

KEYNOTES: #

1. BACK-BOX: PROVIDE 4"X4"X2-1/8" FLUSH MOUNTED BOX.
2. MUD-RING: PROVIDE 1-GANG MUD RING FOR MOUNTING OF DEVICE / FACEPLATE. MUD RING SHALL BE SEPARATE COMPONENT FROM BACK-BOX.
3. FACE PLATE: PROVIDE 1-PORT FACEPLATE FOR CAMERA BACK-BOXES MOUNTED ABOVE ACCESSIBLE CEILING. CAMERAS, CARD READERS, AND OTHER SECURITY DEVICES WILL MOUNT DIRECTLY OVER BACK-BOX OPENING FOR ALL OTHER MOUNTING CONDITIONS.
4. CONDUIT: PROVIDE (1) 3/4-INCH CONDUIT.
5. SUPPORT: PROVIDE THREADED ROD ATTACHED TO STRUCTURE ABOVE.

S.01 SECURITY DEVICE RACEWAY DETAIL

SYMBOLS:

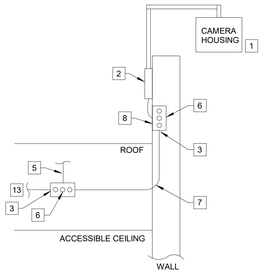

S.02/PR - WALL (EXTERIOR) - PARAPET MOUNT

NOTE: IF PARAPET WALL PROVIDES INSUFFICIENT MOUNTING SURFACE TO SUPPORT CAMERA THEN PROVIDE A ROOF TYPE MOUNT FOR LOCATION. COORDINATE WITH ENGINEER PRIOR TO INSTALLATION.

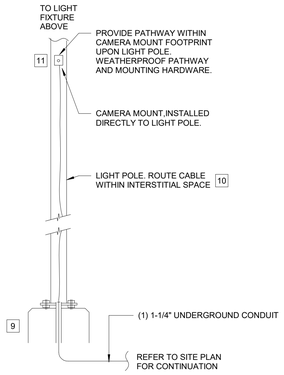

S.02/P - LIGHT POLE - POLE MOUNT

NOTE: CAMERA ONLY POLES HAVE SIMILAR REQUIREMENT TO THAT OF LIGHT POLES. COORDINATE WITH CAMERA POLE MANUFACTURER FOR REQUIREMENTS.

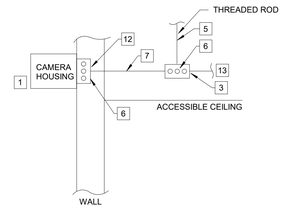

S.02/WE - WALL (EXTERIOR)

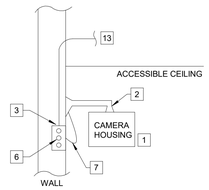

S.02/WA - WALL - ARM MOUNT

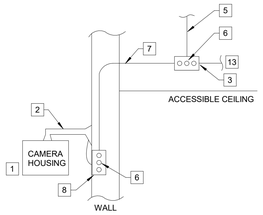

S.02/WAE - WALL (EXTERIOR) - ARM MOUNT

NOTE: PROVIDE A CORNER MOUNT BRACKET FOR CORNER MOUNTED CAMERAS. LOCATE DEVICE BOX 6-INCHES OFF SET FROM CORNER AND 8-INCHES BELOW CAMERA MOUNTING HEIGHT (REFER TO DEVICE MOUNT HEIGHT DETAIL).

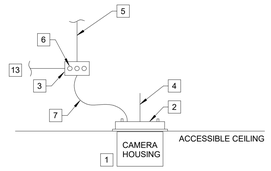

S.02/C - CEILING (ACCESSIBLE)

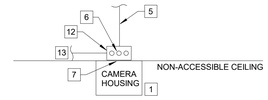

S.02/CN - CEILING (NON-ACCESSIBLE)

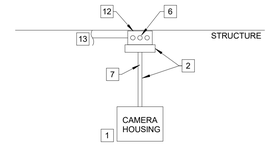

S.02/CX - CEILING - (EXPOSED)

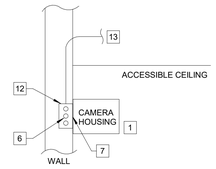

S.02/W –WALL

GENERAL NOTES:

1. PROVIDE BLANK COVER PLATE OVER CAMERA BACK-BOXES WHERE CAMERA DOES NOT MOUNT DIRECTLY OVER BOX OPENING.

KEYNOTES #

1. CAMERA: REFER TO CAMERA SCHEDULE AND SPECIFICATIONS FOR ADDITIONAL REQUIREMENTS ON CAMERA TYPE AND HOUSING.
2. CAMERA MOUNT: PROVIDE CAMERA MOUNTING BRACKET AND ACCESSORIES PER MANUFACTURER RECOMMENDATIONS FOR THIS MOUNTING CONDITION.
3. RACEWAY: REFER TO DETAIL R.01 FOR BACK-BOX REQUIREMENTS.
4. HANGER: PROVIDE HANGER WIRE ATTACHED TO STRUCTURE ABOVE PER MANUFACTURER RECOMMENDATIONS.
5. SUPPORT: PROVIDE THREADED ROD ATTACHED TO STRUCTURE ABOVE.
6. DATA CABLE: REFER TO DETAIL C.03 FOR STRUCTURED CABLING REQUIREMENTS.
7. PATCH CABLE: PROVIDE DATA PATCH CORD TO CONNECT CAMERA IF CAMERA MODEL DOES NOT HAVE PIGTAIL DATA CONNECTION.
8. WEATHER PROOF RACEWAY: PROVIDE A 1-GANG MASONRY BACK BOX WITH AN APPROPRIATE WEATHER PROOF FACEPLATE AND A 1-INCH LIQUID TIGHT CONDUIT ROUTED FROM BACK-BOX TO CAMERA MOUNT.
9. BASE: COORDINATE CONCRETE BASE REQUIREMENTS WITH POLE MANUFACTURER PRIOR TO INSTALLATION.
10. PATHWAY: COORDINATE WITH THE ELECTRICAL CONTRACTOR TO PRIOR TO INSTALLATION TO ENSURE THE POWER CONDUCTORS ARE ROUTED WITHIN CONDUIT FOR SEPERATION.
11. MOUNTING LOCATION: MOUNT CAMERA BELOW LIGHT FIXTURE. COORDINATE FINAL MOUNTING REQUIREMENTS WITH LIGHT POLE MANUFACTURER PRIOR TO FABRICATION.
12. CAMERA MOUNTING BOX: PROVIDE 4"X4"X2-1/8" FLUSH MOUNTED BOX WITH SINGLE GANG MUD RING OR MASONRY EQUIVALENT.
13. CONDUIT CONTINUATION: REFER TO COMMUNICATION SYSTEM SYMBOL - PATHWAY REQUIREMENT NOTES FOR CONDUIT CONTINUATION REQUIREMENTS.

S.02 SECURITY SYSTEM CAMERA DETAILS

SYMBOLS:

BRINKLEY SARGENT WIGINTON ARCHITECTS

Architect: Brinkley Sargent Wigginton Architects (972) 960-9970
Landscape: Kendall Landscape Architecture (214) 739-3226
Structural: L.A. Fuess Partners, Inc (214) 593-1118
MEP: M-E Engineers (214) 741-1589
Civil: KSA Engineers, Inc (903) 236-7700
Technology: M-E Engineers (303) 421-6656

LONGVIEW POLICE DEPARTMENT

XXXX SOUTH ST. LONGVIEW, TEXAS 75601

History

#	Date	Description

STATE OF TEXAS
ANDREW SHIVLEY
109010
LICENSED
PROFESSIONAL ENGINEER

ME Engineers, Inc.
F-10231
08/19/2020

TECHNOLOGY DETAILS

20513
08/19/2020

T503

BID ISSUE

6/17/2020 2:35:08 PM

C:\Revit Projects\20513\LPD_CENTRAL_R19_Steven.Mowell@me-engineers.com.rvt

© 2020 Brinkley Sargent Wigintton Architects, Inc.

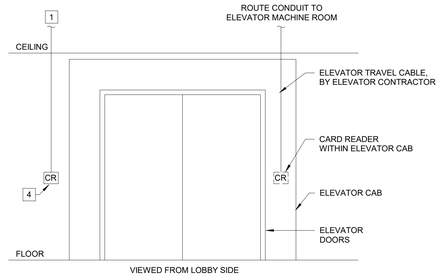

S.01 / E - ELEVATOR

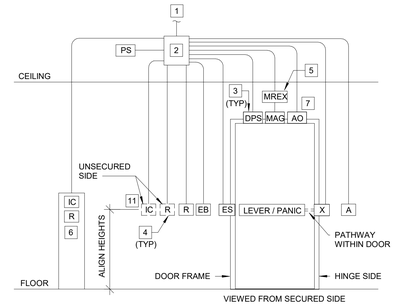

S.01 / S - SINGLE LEAF DOOR

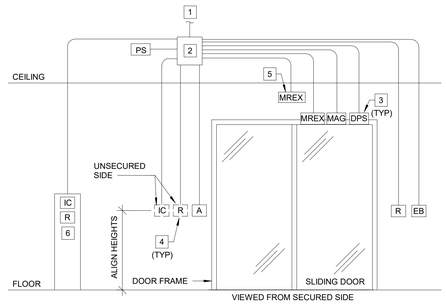

S.01 / SLD - SLIDING DOOR

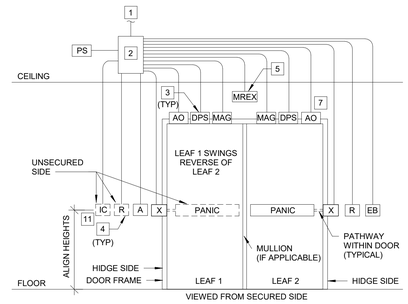

S.01 / DE - DUAL EGRESS DOOR

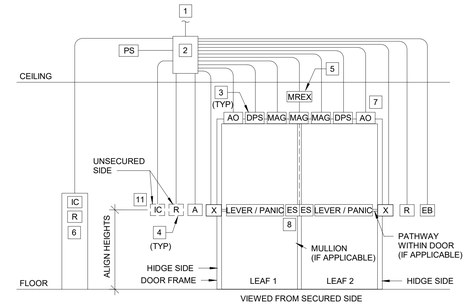

S.01 / D - DOUBLE LEAF DOOR

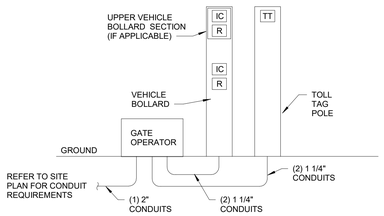

S.01 / VG - VEHICLE GATE

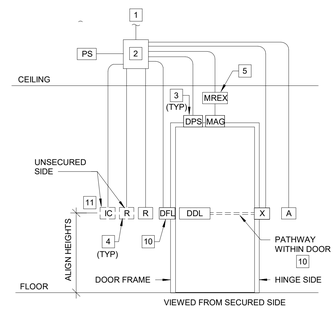

S.01 / D-S - DETENTION SYSTEM SINGLE LEAF DOOR

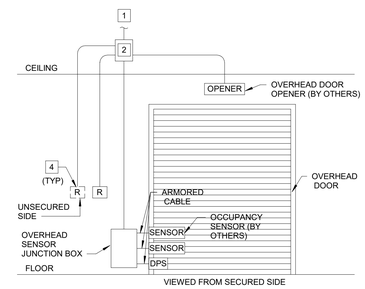

S.01 / O - OVERHEAD DOOR

GENERAL NOTES:

1. DOOR DETAILS ARE GENERAL IN NATURE AND REPRESENT DEVICE REQUIREMENTS (CONDUIT, CONDUIT ROUTING AND DEVICES BOXES) TYPICALLY UTILIZED FOR EACH DOOR TYPE. REFER TO SECURITY DOOR SCHEDULE FOR SPECIFIC DOOR REQUIREMENTS. IF DOOR REQUIREMENTS ARE IN CONFLICT, PROVIDE MOST STRINGENT REQUIREMENTS TO MEET ALL POSSIBLE CONFIGURATIONS.
2. DEVICE LOCATIONS SHOWN ON DETAILS DO NOT DEPICT ACTUAL PLACEMENT IN RELATION TO DOORWAY. REFER TO TECHNOLOGY SERIES AND ARCHITECTURAL PLAN VIEWS FOR DEVICE LOCATIONS. COORDINATE WITH ARCHITECT / ENGINEER FOR FURTHER LOCATION REQUIREMENTS.
3. SECURITY CONTRACTOR TO PROVIDE CONNECTIVITY TO DOOR HARDWARE FOR INTEGRATION INTO SECURITY SYSTEM. DOOR HARDWARE PROVIDED BY OTHERS, UNLESS OTHERWISE NOTED. REFER TO ACCESS CONTROL DOOR SCHEDULE FOR FURTHER REQUIREMENTS.
4. CONDUITS SHOWN ARE REQUIRED FOR LOW VOLTAGE CABLE PATHWAY. CONDUIT INSTALLATION MAY VARY FROM THAT SHOWN BASED UPON FIELD CONDITIONS.
5. LOCATE CARD READER WITHIN VERY CLOSE PROXIMITY OF AND SAME HEIGHT REQUIREMENTS AS HANDICAP BUTTONS WHEN PRESENT.
6. CARD READERS SHALL NOT BE MOUNTED BACK TO BACK. RATHER MOUNT CARD READERS OFF SET HORIZONTALLY FROM ONE ANOTHER.
7. MULLION MOUNTED CARD READERS SHALL BE LOCATED UPON FRAME OFDOOR. ROUTE CONDUIT IN DOOR FRAME. COORDINATE WITH OTHER TRADES FOR EXACT LOCATION AND FRAME PREPARATION.

KEYNOTES:

1. PATHWAY TO SECURITY PANEL LOCATIONS: PROVIDE (1) 1-1/4" CONDUIT REFER TO SECURITY SYSTEM SYMBOL - PATHWAY REQUIREMENT NOTES ON LEGEND SHEET FOR CONDUIT CONTINUATION REQUIREMENTS.
2. CONSOLIDATION BOX: LOCATE 8"x8"x4" BOX ON SECURE SIDE OF DOOR. LOCATE WITHIN ACCESSIBLE CEILING SPACE (OR AREA OF ACCESS) AS CLOSE TO DOORWAY AS POSSIBLE, NOT TO EXCEED 50 FEET OF DOOR LOCATION.
3. PATHWAY TO DOOR HARDWARE: PROVIDE 3/4" CONDUIT ROUTED FROM CONSOLIDATION BOX TO HARDWARE MOUNTED IN OR AROUND DOOR FRAME. COORDINATE CONDUIT TERMINATION REQUIREMENTS WITH DOOR HARDWARE PROVIDER AND DEVICE MANUFACTURER. ROUTE CONDUIT WITHIN DOOR FRAME WHERE REQUIRED.
4. DEVICE PATHWAY: PROVIDE (1) 4"x4" SQUARE BOX WITH 1-GANG MUD RING AND (1) 1" CONDUIT ROUTED FROM DEVICE TO CONSOLIDATION BOX, UNLESS NOTED OTHERWISE.
5. MOTION REQUEST TO EXIT (MREX) PATHWAY: PROVIDE (1) 4"x4" SQUARE BOX WITH 1-GANG MUD RING MOUNTED HORIZONTALLY AND (1) 1" CONDUIT ROUTED FROM DEVICE TO CONSOLIDATION BOX, UNLESS NOTED OTHERWISE. MOUNT DEVICE CENTERED ABOVE DOORWAY. IF WALL MOUNTING IS NOT FEASIBLE DUE TO OBSTRUCTION, I.E. GLASS PANELS, CEILING MOUNT MREX DEVICE ACCORDING TO MANUFACTURER RECOMMENDATIONS. CONTRACTOR SHALL COORDINATE WITH OTHER TRADES PRIOR TO INSTALLATION.
6. BOLLARD: PROVIDE (2) 1" CONDUITS FROM BOLLARD LOCATION TO CONSOLIDATION BOX. COORDINATE DEVICE MOUNTING WITH BOLLARD PROVIDER AND OTHER TRADES PRIOR TO INSTALLATION.
7. ADA FUNCTIONALITY: THE AUTO OPENER AND ASSOCIATED HANDICAP BUTTONS ARE SPECIFIED ELSEWHERE WITHIN CONSTRUCTION DOCUMENTS. FOR ADA EQUIPMENT INTEGRAL TO ACCESS CONTROL DOORS, ROUTE ALL CONDUIT TO CONSOLIDATION BOX. COORDINATE WITH DOOR HARDWARE PROVIDER AND OTHER TRADES PRIOR TO INSTALL.
8. ELECTRIC STRIKE: IF A MULLION IS SPECIFIED, THEN THE ELECTRIC STRIKE AND CONDUIT MOUNT WITHIN MULLION.
9. ELECTRIC STRIKE: IF A MULLION IS SPECIFIED, THEN THE ELECTRIC STRIKE AND CONDUIT MOUNT WITHIN MULLION, OTHERWISE THE ELECTRIC STRIKE MOUNTS WITHIN BOLTED DOOR LEAF AND REQUIRES TRANSFER AND PATHWAY THROUGH DOOR
10. LOW VOLTAGE PATHWAY: PATHWAY SHOWN IS FOR LOW VOLTAGE CABLING ONLY. HIGH VOLTAGE PATHWAY MAY BE REQUIRED (BASED ON HARDWARE REQUIREMENTS). COORDINATE PATHWAY REQUIREMENTS WITH HARDWARE PROVIDER AND OTHER TRADES PRIOR TO INSTALLATION.
11. INTERCOM: AUDIO AND/ OR VIDEO INTERCOM BACK-BOXES ARE MANUFACTURER SPECIFIC. PROVIDE BACK-BOX ACCORDING TO MANUFACTURE REQUIREMENTS. REFER TO PLAN VIEWS AND DOOR SCHEDULE FOR FURTHER INFORMATION.11. INTERCOM: AUDIO AND/ OR VIDEO INTERCOM BACK-BOXES ARE MANUFACTURER SPECIFIC. PROVIDE BACK-BOX ACCORDING TO MANUFACTURE REQUIREMENTS. REFER TO PLAN VIEWS AND DOOR SCHEDULE FOR FURTHER INFORMATION.

ABBREVIATIONS (NOT ALL ABBREVIATIONS MAY BE USED)	
A	LOCAL ALARM WITH / WITHOUT RESET
AO	AUTO OPENER
EB	EXIT BUTTON
DDL	DETENTION DOOR MOUNT LOCK
DFL	DETENTION FRAME MOUNT LOCK
ES	STRIKE STYLE LOCK
IC	INTERCOM
LEVER	LEVER STYLE LOCK
PANIC	PANIC STYLE LOCK
R	CARD / KEYPAD / BIOMETRIC READER
X	TRANSFER

S.03 SECURITY ACCESS CONTROL SYSTEM DETAILS

SYMBOLS:

BRINKLEY SARGENT WIGINTON ARCHITECTS

Architect: Brinkley Sargent Wigintton Architects (972) 960-9970
Landscape: Kendall Landscape Architecture (214) 739-3226
Structural: L.A. Fuess Partners, Inc (214) 593-1118
MEP: M-E Engineers (214) 741-1589
Civil: KSA Engineers, Inc (903) 236-7700
Technology: M-E Engineers (303) 421-6656

LONGVIEW POLICE DEPARTMENT

XXXX SOUTH ST. LONGVIEW, TEXAS 75601

History		
#	Date	Description

STATE OF TEXAS
ANDREW SHIVLEY
109010
LICENSED
PROFESSIONAL ENGINEER
ME Engineers, Inc.
F-10231
08/19/2020

TECHNOLOGY DETAILS

20513
08/19/2020
T504

BID ISSUE

C:\Revit Projects\2019\LPD_CENTRAL_T1_Steven.Maxwell@me-engineers.com.rvt 8/17/2020 2:30:10 PM

© 2020 Brinkley Sargent Wigginton Architects, Inc.

ABBREVIATIONS

AC	ALTERNATING CURRENT
ADA	AMERICANS WITH DISABILITIES ACT
AFF	ABOVE FINISHED FLOOR
AFG	ABOVE FINISHED GRADE
AHU	AIR HANDLING UNIT
ALD	ASSISTED LISTENING DEVICE
ALPETH	ALUMINUM POLYETHYLENE
ALS	ASSISTED LISTENING SYSTEM
ALT	ALTERNATE
AMP, A	AMPERE
ANSI	AMERICAN NATIONAL STANDARDS INSTITUTE
ANT	ANTENNA
ATSC	ADVANCED TELEVSION SYSTEMS COMMITTEE (DIGITAL TELEVISION SIGNAL)
AUX	AUXILIARY
AUDIO	MICROPHONE OR LINE LEVEL BALANCED SIGNAL
AV	AUDIO VIDEO
AWG	AMERICAN WIRE GAUGE
BAS	BUILDING AUTOMATION SYSTEM
BFC	BELOW FINISHED CEILING
BFG	BELOW FINISHED GRADE
BICSI	BUILDING INDUSTRY CONSULTING SERVICES INTERNATIONAL
BMS	BUILDING MANAGEMENT SYSTEM
BRI	BASIC RATE INTERFACE (ISDN)
C	CONDUIT
CATV	COMMUNITY ANTENNA TV (CABLE TV)
CC	CONTACT CLOSURE
CMP	COMMUNICATIONS PLENUM CABLE
CMR	COMMUNICATIONS RISER CABLE
CO	CENTRAL OFFICE
COAX	COAXIAL
CODEC	CODER / DECODER
CSI	CONSTRUCTION SPECIFICATIONS INSTITUTE
DAS	DISTRIBUTED ANTENNA SYSTEM
DB	DECIBEL
DC	DIRECT CURRENT
DEMARC	DEMARCATION
DISC	DISCONNECT
DM	DIGITAL MEDIA SIGNAL
DMP	DIGITAL MEDIA PLAYER
DP	DISPLAYPORT
DSL	DIGITAL SUBSCRIBER LINE
DSP	DIGITAL SIGNAL PROCESSOR
DSS	DIGITAL SATELLITE SIGNAL
DVI-D	DIGITAL VISUAL INTERFACE-DIGITAL
DVI-I	DIGITAL VISUAL INTERFACE-INTEGRATED
DWG	DRAWING
EBC	EQUIPMENT BONDING CONDUCTOR
EIA	ELECTRONICS INDUSTRY ALLIANCE
ELEC	ELECTRIC OR ELECTRICAL
ELEV	ELEVATOR
EMC	ELECTROMAGNETIC COMPATIBILITY
EMI	ELECTROMAGNETIC INTERFERENCE
EMT	ELECTRIC METALLIC TUBING
ENG	ELECTRONIC NEWS GATHERING
EX	EXISTING
FA	FIRE ALARM
FAA	FEDERAL AVIATION ADMINISTRATION
FACP	FIRE ALARM CONTROL PANEL
FLEX	FLEXIBLE
FM	FREQUENCY MODULATION
FO	FIBER OPTIC
FP	FLAT PANEL (VIDEO DISPLAY)
FTP	FILE TRANSFER PROTOCOL
GA	GAUGE
GALV	GALVANIZED
GB	GIGABYTE
GbPS	GIGABITS PER SECOND
GC	GENERAL CONTRACTOR
GEN	GENERATOR
GFCI	GROUND FAULT CIRCUIT INTERRUPTER

ABBREVIATIONS

GHz	GIGAHERTZ
GMP	GUARANTEED MAXIMUM PRICE
GUI	GRAPHICAL USER INTERFACE
HC	HORIZONTAL CROSS-CONNECT
HD	HIGH DEFINITION
HDMI	HIGH DEFINITION MULTIMEDIA INTERFACE
HVAC	HEATING, VENTILATING, AND AIR-CONDITIONING
Hz	HERTZ
IC	INTERMEDIATE CROSS-CONNECT
ID	INSIDE DIAMETER
IDF	INTERMEDIATE DISTRIBUTION FRAME
IEC	INTERNATIONAL ELECTROTECHNICAL COMMISSION
IEEE	INSTITUTE OF ELECTRICAL AND ELECTRONICS ENGINEERS, INC.
IF	INTERFACE
IG	ISOLATED GROUND
IMC	INTERMEDIATE GRADE METALLIC CONDUIT
IP	INTERNET PROTOCOL (ETHERNET)
IR	INFRARED SIGNAL
ISDN	INTEGRATED SERVICES DIGITAL NETWORK
ISO	INTERNATIONAL ORGANIZATION OF STANDARDS
J-BOX	JUNCTION BOX
kb	KILOBIT
kbps	KILOBIT PER SECOND
kcmil	THOUSANDS OF CIRCULAR MILLS
kHz	KILOHERTZ
km	KILOMETER
kVA	KILOVOLT AMPERES
kW	KILOWATT
kWh	KILOWATT-HOURS
LAN	LOCAL AREA NETWORK
LED	LIGHT-EMITTING DIODE
LEC	LOCAL EXCHANGE CARRIER (OR SP)
LFC	LIQUID TIGHT FLEXIBLE CONDUIT
LUMEN	LUMINOUS FLUX (PROJECTOR BRIGHTNESS)
LV	LOW VOLTAGE
LVC	LOW VOLTAGE CONTROL INTERFACE
M	METER
mA	MILLIAMPERE
MAG	MAGNETIC
MB	MEGABYTE
Mbps	MEGABITS PER SECOND
MC	MAIN CROSS-CONNECT
MDF	MAIN DISTRIBUTION FRAME
MECH	MECHANICAL
MFR	MANUFACTURER
MHz	MEGAHERTZ
mm	MILLIMETER
MMFO	MULTI-MODE FIBER OPTIC
MNS	MASS NOTIFICATION SYSTEM
MPOE	MAIN POINT OF ENTRY
MPOP	MINIMUM POINT OF PRESENCE
MTR	MAIN TELECOM ROOM
NEC	NATIONAL ELECTRIC CODE
NEMA	NATIONAL ELECTRICAL MANUFACTURERS ASSOCIATION
NFPA	NATIONAL FIRE PROTECTION ASSOCIATION
NIC	NETWORK INTERFACE CARD
NID	NETWORK INTERFACE DEVICE
NIT	1 CANDELA PER SQUARE METER (FLAT PANEL BRIGHTNESS)
nm	NANOMETER
NTS	NOT TO SCALE
OC	ON CENTER
OD	OUTSIDE DIAMETER
OEM	ORIGINAL EQUIPMENT MANUFACTURER
OFE	OWNER FURNISHED EQUIPMENT
OS	OPERATING SYSTEM
OSHA	OCCUPATIONAL SAFETY AND HEALTH ADMINISTRATION
OSP	OUTSIDE PLANT
OTDR	OPTICAL TIME DOMAIN REFLECTOMETER

ABBREVIATIONS

PA	PUBLIC ADDRESS
PABX	PRIVATE AUTOMATIC BRANCH EXCHANGE
PBX	PRIVATE BRANCH EXCHANGE
PCI	PAYMENT CARD INDUSTRY
PE	POLYETHYLENE
PH	PHASE
POTS	PLAIN OLD TELEPHONE SERVICE
PR	PAIRS
PRI	PRIMARY RATE INTERFACE (ISDN)
PSTN	PUBLIC SWITCHED TELEPHONE NETWORK
PROX	PROXIMITY
PTZ	PAN TILT ZOOM CAMERA
PVC	POLYVINYL CHLORIDE
PWR	POWER
RCDD	REGISTERED COMMUNICATIONS DISTRIBUTION DESIGNER
RF	RADIO FREQUENCY SIGNAL
RGBHV	HIGH RESOLUTION ANALOG VIDEO
RGS	RIGID GALVANIZED STEEL
RH	RELATIVE HUMIDITY
RMC	RIGID METALLIC CONDUIT
RNC	RIGID NON-METALLIC CABLE
RS-232	BI-DIRECTIONAL CONTROL DATA STREAM (RS-232/RS-422/RS485)
RX	RECEIVE
SMFO	SINGLE-MODE FIBER OPTIC
SMPOE	SECONDARY MAIN POINT OF ENTRY
SP	SERVICE PROVIDER
SPEAKER	SPEAKER LEVEL SIGNAL
SPL	SOUND PRESSURE LEVEL
STEREO	A BALANCED 2 CHANNEL AUDIO SIGNAL
STI-PA	SPEECH INTELLIGIBILITY INDEX - PUBLIC ADDRESS
STP	SHIELDED TWISTED PAIR
SW	SWITCH
TBB	TELECOMMUNICATIONS BONDING BACKBONE
TCP	TRANSMISSION CONTROL PROTOCOL
TCP/IP	TRANSMISSION CONTROL PROTOCOL WITH INTERNET PROTOCOL
TDD	TELECOMMUNICATIONS DEVICE FOR THE DEAF
TDR	TIME DOMAIN REFLECTOMETER
TDR	TELECOM DEMARC ROOM
TEL	TELEPHONE
TELCO	TELEPHONE COMPANY (SP)
TGB	TELECOMMUNICATIONS GROUND BUS BAR
TIA	TELECOMMUNICATIONS INDUSTRY ASSOCIATION
TMGB	TELECOMMUNICATIONS MAIN GROUND BUS BAR
TP	TOUCH PANEL (CONTROL SYSTEM)
TR	TELECOMMUNICATIONS ROOM
TTB	TELEPHONE TERMINAL BOARD
TVSS	TRANSIENT VOLTAGE SURGE SUPPRESSION
UBS	UNIFORM BUILDING CODE
UC	UNDER COUNTER
UG	UNDERGROUND
UNO	UNLESS NOTED OTHERWISE
UPS	UNINTERRUPTIBLE POWER SUPPLY
USB	UNIVERSAL SERIAL BUS
UTP	UNSHIELDED TWISTED PAIR
V	VOLTAGE
VC	VOLUME CONTROL
VGA	VIDEO GRAPHIC ARRAY (ANALOG COMPUTER SIGNAL, SEE ALSO RGBHV)
VM	VOLTMETER
VTC	VIDEO TELECONFERENCE SYSTEM
W	WATT
WAN	WIDE AREA NETWORK
WATS	WIDE AREA TELECOMMUNICATIONS SERVICE
WLAN	WIRELESS LOCAL AREA NETWORK (WIFI)
WM	WIRELESS MICROPHONE
WP	WEATHER PROOF
WT	WATERTIGHT
XFMR	TRANSFORMER
XP	EXPLOSION PROOF

GENERAL TECHNOLOGY SYSTEM REQUIREMENTS:

1. HEIGHTS SHOWN ARE TYPICAL TO CENTERLINE OF BOX UNLESS NOTED OTHERWISE. ALL DEVICE OUTLETS SHALL BE MOUNTED VERTICALLY.
2. MOUNTING HEIGHTS SHOWN ON ARCHITECTURAL ELEVATIONS SHALL GOVERN OVER THOSE SHOWN ABOVE.
3. ALL DEVICES INDICATED TO BE INSTALLED AT DIFFERENT MOUNTING HEIGHTS AND LOCATED WITHIN ONE STUD SPACE FROM EACH OTHER SHALL ALIGN VERTICALLY, ON THE SAME SIDE OF THE STUD. WHERE WALL MOUNTED TELEPHONES OCCUR OVER LIGHT SWITCHES, VOLUME CONTROLS, ETC. OFFSET ONE STUD SPACE.
4. ALL EXPOSED RACEWAYS SHALL BE INSTALLED PARALLEL OR PERPENDICULAR TO WALLS OR STRUCTURAL MEMBERS SUCH THAT THEY FOLLOW STRUCTURAL SURFACE CONTOURS AND SHALL BE INSTALLED SUCH THAT THEY DO NOT OBSTRUCT PASSAGEWAYS. MULTIPLE RACEWAYS SHOULD BE INSTALLED GROUPED TOGETHER. THE LOCATION OF THESE RACEWAYS SHALL BE APPROVED BY THE ARCHITECT PRIOR TO INSTALLATION. (EXTRA TIME SHOULD BE ALLOWED FOR THIS REVIEW AND APPROVAL).
5. ALL BACK BOXES SHALL BE FLUSH MOUNTED UNLESS OTHERWISE NOTED. CONTRACTOR SHALL COORDINATE INSTALLATION OF CONDUIT AND BACK BOXES IN POURED CONCRETE, MASONRY, AND GYP WALLS.
6. DATA GIVEN ON THE DRAWINGS IS AS EXACT AS COULD BE SECURED. ABSOLUTE ACCURACY IS NOT GUARANTEED AND THE CONTRACTOR SHALL OBTAIN AND VERIFY EXACT LOCATIONS, MEASUREMENTS,LEVELS,SPACE REQUIREMENTS, POTENTIAL CONFLICTS WITH OTHER TRADES,ETC. AT THE SITE AND SHALL SATISFACTORILY ADAPT HIS WORK TO ACTUAL CONDITIONS AT THE BUILDINGS.THE DRAWINGS ARE DIAGRAMMATICAL IN NATURE AND SHALL NOT BE SCALED.HOWEVER THIS DOES NOT RELIEVE ANY SUB-CONTRACTOR FROM COORDINATING HIS WORK WITH ALL OTHER TRADES AND FROM ADJUSTING HIS WORK AS REQUIRED BY THE ACTUAL CONDITIONS OF THE PROJECT.THE CONTRACTOR SHALL VISIT THE SITE BEFORE SUBMITTING A BID TO BECOME THOROUGHLY FAMILIAR WITH THE ACTUAL CONDITIONS OF THE PROJECT.
7. COORDINATE AND ADJUST ALL WORK BETWEEN TRADES AND EXISTING CONDITIONS IN ORDER TO ACCOMPLISH A NEAT, INTEGRATED AND EFFICIENT INSTALLATION WHICH INCLUDE BUT IS NOT LIMITED TO:
   - A. EXAMINE THE CONTRACT DOCUMENTS OF ALL TRADES (IE. THE ARCHITECTURAL REFLECTED CEILING PLAN, MECHANICAL HVAC DRAWINGS, ELECTRICAL LIGHTING PLAN, TECHNOLOGY LAN, FIRE PROTECTION PLAN, ETC.)
   - B. COORDINATE NECESSARY EQUIPMENT, FIXTURES, ETC. SO THAT THE FINAL INSTALLATION IS COMPATIBLE WITH THE MATERIALS AND EQUIPMENT OF THE OTHER TRADES,
   - C. THIS CONTRACTOR SHALL ASSIST THE DIVISION 21, 22, & 23 CONTRACTOR IN PREPARING SHOP DRAWINGS FOR COORDINATING INSTALLATION OF ALL WORK (IE. LOCATING ALL CEILING CLEARANCES,CABLE TRAY, CLEARANCES THROUGHOUT, ETC.).
8. DEFINITIONS:

A. "FURNISH" MEANS TO "SUPPLY" AND USUALLY REFERS TO AN ITEM OF EQUIPMENT.

B. "INSTALL" MEANS TO "SET IN PLACE, CONNECT AND PLACE IN FULL OPERATIONAL ORDER".

C. "PROVIDE" MEANS TO "FURNISH AND INSTALL".

D. "EQUIVALENT"MEANS"MEETS THE SPECIFICATIONS OF THE REFERENCE PRODUCT OR ITEM IN ALL SIGNIFICANT ASPECTS."SIGNIFICANT ASPECTS SHALL BE DETERMINED BY THE ENGINEER.

E. "WORK BY OTHER(S)(CONTRACTOR)":"RE:DIVISION XX",AND SIMILAR EXPRESSIONS MEANS WORK TO BE PERFORMED UNDER THE CONTRACT DOCUMENTS, BUT NOT NECESSARILY UNDER THE DIVISION OR SECTION OF THE WORK ON WHICH THE NOTE APPEARS. IT IS THE CONTRACTORS SOLE RESPONSIBILITY TO COORDINATE THE WORK OF THE CONTRACT BETWEEN HIS/HER SUPPLIERS, SUBCONTRACTORS, AND EMPLOYEES. IF CLARIFICATION IS REQUIRED, CONSULT ARCHITECT BEFORE SUBMITTING BID.

9. FUTURE WORK:

A. THE DRAWINGS AND SPECIFICATIONS MAY INDICATE SOME WORK WHICH IS TO BE PROVIDED UNDER THIS SCOPE OF WORK BUT WHOSE TIMING MAY BE DIFFERENT THAN THE REST OF THE WORK.THIS WORK GENERALLY FACILITATES THE INSTALLATION OF "TENANT FINNISH" WORK OR FOOD SERVICE WORK. IT IS WITHIN THIS DIVISION'S SCOPE OF WORK TO COORDINATE THIS WORK WITH THE WORK OF THE CONTRACTOR PROVIDING THE FUTURE SCOPE OF WORK.

10. "FIRE STOPPING"REQUIREMENT.ALL PENETRATIONS THROUGH RATED WALLS AND FLOORS AND CONDUIT/SLEEVE OPENINGS SHALL BE SEALED WITH MATERIAL CAPABLE OF PREVENTING THE PASSAGE OF FLAMES, HOT GASSES AND SMOKE WHEN SUBJECTED TO THE REQUIREMENTS OF THE TEST STANDARD SPECIFIC FOR ALL APPLICABLE CODES.
11. REFER TO ARCHITECTURAL DRAWINGS FOR MINIMUM CLEARANCE REQUIREMENTS TO DUCTWORK,CONDUIT, CABLE TRAY. LIGHTING, ETC.
12. ALL COMMUNICATIONS RACEWAY AND PATHWAYS INCLUDING BUT NOT LIMITED TO CONDUIT, SLEEVES, CABLE TRAY, J-HOOKS SHALL BE INSTALLED TO MINIMIZE UNNECESSARY CABLE LENGTHS AND MAINTAIN INDUSTRY STANDARD LENGTH LIMITATIONS FOR HORIZONTAL CABLE DISTRIBUTION (I.E. CAT.5E ANDCAT.6/CAT.6A).NO HORIZONTAL CABLE LENGTH (BASIC LINK) SHALL EXCEED 90 METERS (295 FEET).
13. CONDUIT SLEEVES SHALL BE INSTALLED THROUGH ALL WALLS WHERE CABLING IS ROUTED USING J-HOOKS TO PROVIDE CONTINUOUS UN-OBSTRUCTED PATHWAYS TO NEAREST COMMUNICATIONS RO0MS FROM STATIONS DEVICES.
14. REFER TO AV CONSTRUCTION DOCUMENTS FOR AV CONDUIT REQUIREMENT INCLUDING SIZES,QUANTITIES, AND LOCATIONS.
15. ALL COMMUNICATIONS CONDUIT, CABLE TRAYS, LADDER RACKS, AND EQUIPMENT RACKS SHALL BE BONDED TO BUILDING GROUND SYSTEM PER NEC 250.
16. ALL COMMUNICATION CONDUIT OR SLEEVES ROUTED THROUGH ELECTRICAL ROOMS SHALL BE PHYSICALLY CONTINUOUS AND BONDED TO GROUND SYSTEM.
17. ANY CABLE TRAY ROUTED THROUGH ELECTRICAL ROOMS OR WITHIN PROXIMITY OF INTERFERING ELECTRICAL SOURCES, SHALL BE ENCLOSED TYPE USING SOLID BOTTOM TROUGH WITH REMOVABLE COVERS. CABLE TRAY SHALL BE BONDED TO GROUND SYSTEM.
18. J-HOOKS SHALL BE ONLY USED IN ACCESSIBLE FINISHED CEILING SPACES NOT SERVED BY CABLE TRAY OR CONDUIT.
19. ALL TELE/DATA CONDUIT AND OTHER RACEWAY INFRASTRUCTURE SHALL HAVE NO LESS THAN 25% SPARE CAPACITY ABOVE THE NEC MINIMUM FILL RATIOS.
20. ALL COMMUNICATIONS CONDUIT LARGER THAN 2" SHALL HAVE A MINIMUM BEND RADIUS OF 10:1 OF THE INSIDE DIAMETER FOR ALL ELBOWS. ALL COMMUNICATIONS CONDUIT 2" AND SMALLER SHALL HAVE A MINIMUM BEND RADIUS OF 6:1 OF THE INSIDE DIAMETER FOR ALL ELBOWS.
21. COMMUNICATIONS CONDUIT ROUTING SHALL NOT EXCEED 180° FOR THE SUM OF ELBOWS FOR A PARTICULAR CONDUIT RUN WITHOUT AN APPROVED PULL-BOX OR MANHOLE. THE MAXIMUM BEND FOR ANY LOCATION SHALL NOT EXCEED 90°.
22. PROVIDE PROTECTIVE BUSHINGS ON ALL COMMUNICATIONS CONDUITS INCLUDING RISER CONDUITS/SLEEVES, HORIZONTAL CONDUITS, DEVICE CONDUITS, AND SLEEVES.
23. ALL RISER CONDUIT SHALL BE STUBBED A MINIMUM OF 2" AFF. PROVIDE A 2" CURB IF SLAB BLOCK-OUT IS USED RATHER THAN SLEEVES. SERVICE PROVIDER AND UNDERGROUND CONDUIT SHALL BE STUBBED A MINIMUM OF 4" AFF.
24. ALL FIBER OPTIC CABLE SHALL BE ARMORED OR INSTALLED WITHIN APPROVED/UL-LISTED INNER-DUCT COMPLETE WITH FITTINGS, COUPLINGS, AND ADAPTERS (CARLON RISER-GARD, PLENUM-GARD, OR APPROVED EQUAL). FIBER OPTIC CABLE CAN UTILIZE METALLIC ARMORED SHEATH RATHER THAN USINGINNER-DUCT.
25. FINAL CABLE INSTALLATION, ALL UNDERGROUND COMMUNICATIONS CONDUIT SHALL BE SEALED TO PREVENT WATER, GAS AND RODENTS FROM ENTERING FACILITY.
26. ALL COMMUNICATIONS CABLE INSTALLED BELOW GRADE SHALL BE GEL FILLED PIC/PE-89 PER RUS/REA DESIGNATION.
27. ALL UNDERGROUND COMMUNICATIONS CONDUIT SHALL HAVE METALLIC LOCATOR TAPE.
28. ALL COMMUNICATIONS CABLE SHALL BE PLENUM RATED (CMP), RISER RATED (CMR) AND UNDERGROUND RATED (WATERBLOCK) ACCORDING TO USE AND ENVIRONMENTAL CONDITIONS.
29. ALL BACKBONE (RISER) COMMUNICATIONS CABLE SHALL BE INSTALLED BASED ON A PHYSICAL STAR TOPOLOGY. REFER TO ONE-LINES DIAGRAMS FOR SPECIFIC ROUTING REQUIREMENTS.
30. ANY COMMUNICATIONS CABLES (FIBER AND COPPER) INSTALLED BELOW GRADE, UNDERGROUND,OR OTHER LOCATIONS SUBJECT TO WET CONDITIONS SHALL UTILIZE WATERBLOCK CONSTRUCTION.
31. CONTRACTOR SHALL NOT PAINT CABLES AND/OR SPRAY CABLES WITH FIRE PROOFING MATERIAL AS IT CAN AFFECT CABLE PERFORMANCE AND WILL VOID THE CABLE WARRANTY.

AV SYSTEM SYMBOLS

	DETAIL REFERENCE	REFER TO REFERENCED DEVICE DESCRIPTION FOR ADDITIONAL REQUIREMENTS.
#	A.05	FLAT PANEL DISPLAY (WALL MOUNT) (# = INDICATES SIZE IN INCHES DIAGONAL)
#	A.06	FLAT PANEL DISPLAY (POLE MOUNT) (# = INDICATES SIZE IN INCHES DIAGONAL)
VW-X	A.10	VIDEO WALL DISPLAY. (VW-X = VIDEO WALL ID#) REFER TO AV ONE-LINES AND SCHEDULES FOR ADDITIONAL REQUIREMENTS.
#x#	A.07	VIDEO PROJECTION SCREEN. WALL MOUNT, ## = WxH SCREEN SIZE IN INCHES
FP	A.05 / R.02	FLAT PANEL DISPLAY WALL BOX. PROVIDE BOX AND COVER COORDINATE FINAL MONTING HEIGHTS WITH ARCHITECT/AV ENGINEER AND GC/EC PRIOR TO INSTALLATION.
AV1 X	A.01	INTERFACE PLATE WALL MOUNTED AT 18"AFF, U.N.O. X = DEFINES INTERFACE TYPE
AV2 X	A.02	INTERFACE PLATE WALL MOUNTED AT 18"AFF, U.N.O. X = DEFINES INTERFACE TYPE
AVU X	A.05	INTERFACE PLATE WALL MOUNTED UNDER FLAT PANEL DISPLAY AT 18" AFF UNLESS NOTED OTHERWISE.
AV		AV TABLE BOX. SEE AV ONE-LINE FOR DETAILS COORDINATE WITH FURNITURE VENDOR
CP1 X	A.01	CONTROL PANEL WALL MOUNTED AT 48"AFF, U.N.O. X = DISPLAY SIZE (IN DIAGONAL INCHES) P = iPAD AND IN-WALL MOUNTING BRACKET
CP2 X	A.02	CONTROL PANEL WALL MOUNTED AT 48"AFF, U.N.O. X = DISPLAY SIZE (IN DIAGONAL INCHES) P = iPAD AND IN-WALL MOUNTING BRACKET
SB X	N/A	SOUND BAR SPEAKER - WALL MOUNT X = SPEAKER TYPE (PER SCHEDULES)
FP	A.06	FLAT PANEL DISPLAY CEILING BOX.
S X	A.10	SPEAKER CEILING MOUNTED. X = SPEAKER TYPE (PER SCHEDULES)
C PTZ	N/A	WALL MOUNTED PTZ CAMERA.
C PTZ	N/A	CEILING MOUNTED PTZ CAMERA.
P	A.08	CEILING MOUNTED VIDEO PROJECTOR.
M	A.01	MICROPHONE CEILING MOUNTED FLUSH OR PENDANT MOUNTED.
AV	N/A	EQUIPMENT CABINET. (REF: RACK / CABINET SCHEDULES)
AV	N/A	AV SLIDE-OUT / PIVOT STYLE EQUIPMENT CABINET. (REF: RACK / CABINET SCHEDULES)

GENERAL NOTES:

1. REFER TO DETAILS AS INDICATED ABOVE FOR ADDITIONAL RACEWAY, CABLING AND/OR DEVICE INFORMATION.
2. REFER TO "COMMUNICATION SYSTEM SYMBOLS" LEGEND FOR STRUCTURED CABLING (DATA) REQUIREMENTS FOR IP-ENABLED DEVICES. AV DETAILS AND/OR SCHEDULES DEFINE RACEWAY REQUIREMENTS, INCLUDING BUT NOT LIMITED TO BACK-BOX TYPE, SIZE, MOUNTING CONDITION AND HEIGHT.

PATHWAY REQUIREMENTS:

1. J-HOOK PATHWAY: ROUTE AND TERMINATE CONDUIT WITHIN NEAREST ACCESSIBLE CEILING SPACE. PROVIDE DEDIATED J-HOOKS AT 48-INCHES ON CENTER FOR REMAINING CABLE RUN TO NEAREST CABLE TRAY (AS APPLICABLE) OR AV ROOM / TELECOM ROOM, UNLESS NOTED OTHERWISE. PROVIDE CONDUIT PATHWAY THROUGH WALLS AND ACCROSS NON-ACCESSIBLE OR EXPOSED CEILING AREAS TO ENSURE UNOBSTRUCTED CABLE PATHWAY FOR ENTIRE CABLE RUN.

BRINKLEY SARGENT WIGGINTON ARCHITECTS

Architect: Brinkley Sargent Wigginton Architects (972) 960-9970
Landscape: Kendall Landscape Architecture (214) 739-3226
Structural: L.A. Fuess Partners, Inc (214) 593-1118
MEP: M-E Engineers (214) 741-1589
Civil: KSA Engineers, Inc (903) 236-7700
Technology: M-E Engineers (303) 421-6656

LONGVIEW POLICE DEPARTMENT

XXXX SOUTH ST. LONGVIEW, TEXAS 75601

History

#	Date	Description

STATE OF TEXAS
ANDREW SHIVLEY
109010
LICENSED
PROFESSIONAL ENGINEER

ME Engineers, Inc.
F-10231
08/19/2020

AV LEGEND AND NOTES

20513
08/19/2020

AV001

BID ISSUE

8/17/2020 2:26:58 PM

C:\Users\Projects\2019\LPD_CENTRAL_T19_Steven.Moses@me-engineers.com.rvt

© 2020 Brinkley Sargent Wigginton Architects, Inc.

AV RACK SCHEDULE

RACK ID Level	RACK ID ID	Rack Location	Size	Manufacturer	Model	RACK FEATURES Vented Front Door	Solid Rear Door	Fan Top	Cable Chase	POWER REQUIREMENTS Normal Power Req'd	Standby Power	Receptacle Type	UPS on EM/SB circuits	Function
1	R.2	IT 1309	45RU	MIDDLE ATLANTIC	BGR-45SA32	X	X	X	X	2-20A/120V		5-20R (2) PDU		RACK FOR LOBBY AND OTHER LEVEL 1 AREAS/FUTURE AV
2	R.3	IT 2125	45RU	MIDDLE ATLANTIC	BGR-45SA32	X	X	X	X	2-20A/120V		5-20R (2) PDU		RACK FOR OTHER LEVEL 2 AREAS/FUTURE AV
2	R.5	LECTERN/FUNRNITURE	12RU	MIDDLE ATLANTIC	L7					1-20A/120V		5-20R (1) PDU		LECTERN RACK FOR TRAINING ROOM
2	R.6	LECTERN/FUNRNITURE	12RU	MIDDLE ATLANTIC	L5					1-20A/120V		5-20R (1) PDU		LECTERN RACK FOR BRIEFING ROOM
3	R.7	CONFERENCE 3008	16RU	MIDDLE ATLANTIC	SRSR-2-16					1-20A/120V		5-20R (1) PDU		SLIDE OUT RACK FOR CONFERENCE ROOM AV

SPEAKER SCHEDULE

Type	Tag	Description	Manufacturer	Part number
LOUDSPEAKERS	S, PA			
LOUDSPEAKER	R1	RECESS MOUNTED TWO-WAY 6.5" CEILING LOUDSPEAKER - GENERAL...	QSC	AC-C6T
LOUDSPEAKER	R2	RECESS MOUNTED TWO-WAY 6.5" CEILING LOUDSPEAKER - PERFORMANCE	QSC	AD-C6T
LOUDSPEAKER	W1	SURFACE MOUNT SPEAKER - GENERAL	QSC	AC-S6T
SOUND BARS	SB X			
SOUND BAR	SB1	SOUND BAR	CRESTRON	UC-SB1-CAM
SOUND BAR	SB2	SOUND BAR	JBL	BAR STUDIO

DISPLAY SCHEDULE

Location	Size Diagonal	Model	WALL BOX Y/N?
MANGER 1104	43"	SAMSUNG TU8000 OR SIMILAR	Y
LOBBY 1105	50"	SAMSUNG TU8000 OR SIMILAR	Y
LOBBY 1105	50"	SAMSUNG TU8000 OR SIMILAR	Y
ADMIN ASST 1106	43"	SAMSUNG TU8000 OR SIMILAR	Y
TRAINING COORDINATOR	43"	SAMSUNG TU8000 OR SIMILAR	Y
BREAK ROOM 112	43"	SAMSUNG TU8000 OR SIMILAR	N
SUPERVISOR 1305	43"	SAMSUNG TU8000 OR SIMILAR	Y
EVID VIEWING 1405	50"	SAMSUNG TU8000 OR SIMILAR	Y
SERGENT 1437	43"	SAMSUNG TU8000 OR SIMILAR	Y
FLEET OFFICE 1511	43"	SAMSUNG TU8000 OR SIMILAR	Y
TRAINING SGT 2019	50"	SAMSUNG TU8000 OR SIMILAR	Y
SERGENT 2018	50"	SAMSUNG TU8000 OR SIMILAR	Y
CONFERENCE 2017	50"	SAMSUNG TU8000 OR SIMILAR	Y
INTERVIEW 2016	50"	SAMSUNG TU8000 OR SIMILAR	Y
LIEUTENANTS 2105	43"	SAMSUNG TU8000 OR SIMILAR	Y
LIEUTENANTS 2106	43"	SAMSUNG TU8000 OR SIMILAR	Y
LIEUTENANTS 2107	43"	SAMSUNG TU8000 OR SIMILAR	Y
CONFERENCE 2108	50"	SAMSUNG TU8000 OR SIMILAR	Y
PLANNING RESEARCH 2116	50"	SAMSUNG TU8000 OR SIMILAR	Y
SERGENT 2112	50"	SAMSUNG TU8000 OR SIMILAR	Y
SERGENT 2141	50"	SAMSUNG TU8000 OR SIMILAR	Y
SERGENT 2142	50"	SAMSUNG TU8000 OR SIMILAR	Y
SPECIAL OPERATIONS LT. 2118	43"	SAMSUNG TU8000 OR SIMILAR	Y
REPORT WRITING 2117	50"	SAMSUNG TU8000 OR SIMILAR	Y
REPORT WRITING 2117	50"	SAMSUNG TU8000 OR SIMILAR	Y
BREAK ROOM 2138	43"	SAMSUNG TU8000 OR SIMILAR	N
SERGENT 2145	43"	SAMSUNG TU8000 OR SIMILAR	Y
QUIET ROOM 2203	43"	SAMSUNG TU8000 OR SIMILAR	N
LACTATION/QUIET RM 2204	43"	SAMSUNG TU8000 OR SIMILAR	N
EXERCISE 2215	43"	SAMSUNG TU8000 OR SIMILAR	N
EXERCISE 2215	43"	SAMSUNG TU8000 OR SIMILAR	N
EXERCISE 2215	43"	SAMSUNG TU8000 OR SIMILAR	N
EXERCISE 2215	43"	SAMSUNG TU8000 OR SIMILAR	N
POLICE CHIEF 3012	50"	SAMSUNG TU8000 OR SIMILAR	Y
ASSISTANT CHIEF 3013	50"	SAMSUNG TU8000 OR SIMILAR	Y
EXEC ASSIST 3009	43"	SAMSUNG TU8000 OR SIMILAR	Y
OFFICE MANAGER 3005	43"	SAMSUNG TU8000 OR SIMILAR	Y
CONFERENCE 3032	50	SAMSUNG TU8000 OR SIMILAR	Y
I.A. LIEUTENANT 3028	43"	SAMSUNG TU8000 OR SIMILAR	Y
I.A. LIEUTENANT 3029	43"	SAMSUNG TU8000 OR SIMILAR	Y
ASSISTANT CHIEF 3023	50"	SAMSUNG TU8000 OR SIMILAR	Y
CAPTAIN 3024	50"	SAMSUNG TU8000 OR SIMILAR	Y
CAPTAIN 3025	50"	SAMSUNG TU8000 OR SIMILAR	Y
SUPPORT SERVICES LT.	43"	SAMSUNG TU8000 OR SIMILAR	Y
CAPTAIN 3027	50"	SAMSUNG TU8000 OR SIMILAR	Y
INTERVIEW 3202	50"	SAMSUNG TU8000 OR SIMILAR	Y
SERGENT 3144	50"	SAMSUNG TU8000 OR SIMILAR	Y
SERGENT 3145	50"	SAMSUNG TU8000 OR SIMILAR	Y
SERGENT 3146	50"	SAMSUNG TU8000 OR SIMILAR	Y
COMMUNICATIONS CENTER 1102	49"	SAMSUNG QM49H	Y
COMMUNICATIONS CENTER 1102	49"	SAMSUNG QM49H	Y
COMMUNICATIONS CENTER 1102	49"	SAMSUNG QM49H	Y
COMMUNICATIONS CENTER 1102	49"	SAMSUNG QM49H	Y
CONFERENCE ROOM 1114	75"	SAMSUNG TU8000 OR SIMILAR	Y
TRAINING ROOM 2004	43"	SAMSUNG TU8000 OR SIMILAR	N
TRAINING ROOM 2004	43"	SAMSUNG TU8000 OR SIMILAR	N
TRAINING ROOM 2004	43"	SAMSUNG TU8000 OR SIMILAR	N
TRAINING ROOM 2004	43"	SAMSUNG TU8000 OR SIMILAR	N
BRIEFING ROOM 2113	43"	SAMSUNG TU8000 OR SIMILAR	Y
BRIEFING ROOM 2113	43"	SAMSUNG TU8000 OR SIMILAR	Y
BRIEFING ROOM 2113	43"	SAMSUNG TU8000 OR SIMILAR	Y
BRIEFING ROOM 2113	43"	SAMSUNG TU8000 OR SIMILAR	Y
BRIEFING ROOM 2113	43"	SAMSUNG TU8000 OR SIMILAR	Y
BRIEFING ROOM 2113	43"	SAMSUNG TU8000 OR SIMILAR	Y
BRIEFING ROOM 2113	85"	SAMSUNG TU8000 OR SIMILAR	Y
CONFERENCE ROOM 3008	85"-98"	SAMSUNG TU8000 OR SIMILAR	Y
CONFERENCE ROOM 3008	50"	SAMSUNG TU8000 OR SIMILAR	Y
CONFERENCE ROOM 3008	50"	SAMSUNG TU8000 OR SIMILAR	Y
CONFERENCE ROOM 3008	50"	SAMSUNG TU8000 OR SIMILAR	Y
CONFERENCE ROOM 3008	50"	SAMSUNG TU8000 OR SIMILAR	Y
EVIDENCE STRATEGY ROOM	55"	SAMSUNG UH55F-E	Y
EVIDENCE STRATEGY ROOM	55"	SAMSUNG UH55F-E	Y
EVIDENCE STRATEGY ROOM	55"	SAMSUNG UH55F-E	N
EVIDENCE STRATEGY ROOM	55"	SAMSUNG UH55F-E	N
SPECIAL INVESTIGATIONS 2144	46"	SAMSUNG UH46F5	Y
SPECIAL INVESTIGATIONS 2144	46"	SAMSUNG UH46F5	Y
SPECIAL INVESTIGATIONS 2144	46"	SAMSUNG UH46F5	N
SPECIAL INVESTIGATIONS 2144	46"	SAMSUNG UH46F5	N
PLANNING RESEARCH 2115	46"	SAMSUNG UH46F5	Y
PLANNING RESEARCH 2115	46"	SAMSUNG UH46F5	Y
PLANNING RESEARCH 2115	46"	SAMSUNG UH46F5	N
PLANNING RESEARCH 2115	46"	SAMSUNG UH46F5	N

BRINKLEY SARGENT WIGINTON ARCHITECTS

Architect: Brinkley Sargent Wigginton Architects (972) 960-9970
Landscape: Kendall Landscape Architecture (214) 739-3226
Structural: L.A. Fuess Partners, Inc (214) 593-1118
MEP: M-E Engineers (214) 741-1589
Civil: KSA Engineers, Inc (903) 236-7700
Technology: M-E Engineers (303) 421-6656

LONGVIEW POLICE DEPARTMENT

XXXX SOUTH ST. LONGVIEW, TEXAS 75601

History		
#	Date	Description

STATE OF TEXAS
ANDREW SHIVLEY
109010
LICENSED
PROFESSIONAL ENGINEER
ME Engineers, Inc.
F-10231
08/19/2020

AV SCHEDULES

20513
08/19/2020
AV003

BID ISSUE

C:\Revit Projects\2015\LRL_CENTRAL_F19_Steven.Mowell@me-engineers.com.rvt 8/17/2020 2:27:01 PM

© 2020 Brinkley Sargent Wigginton Architects, Inc.

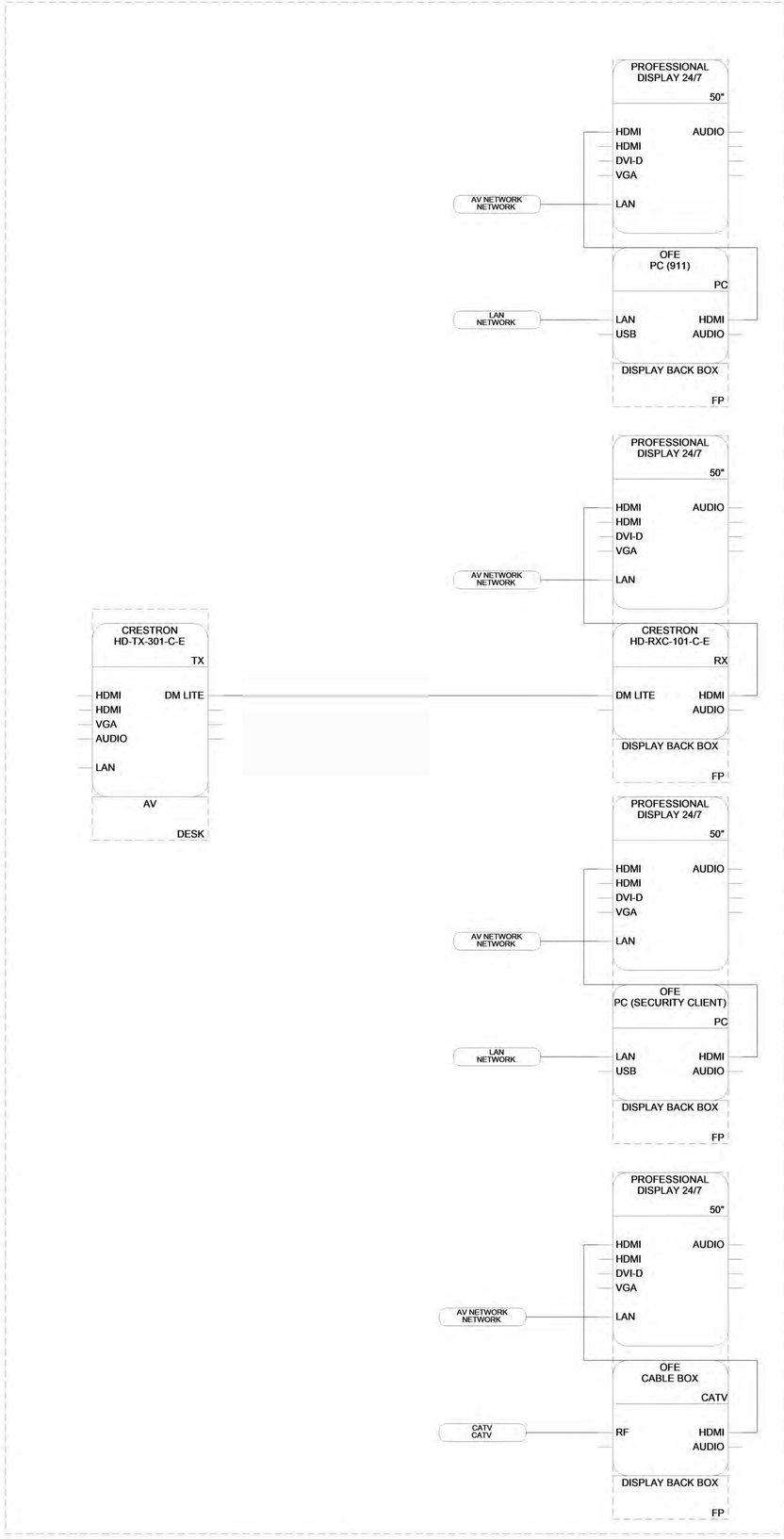

1 COMMUNICATIONS CENTER 1102 AV ONE-LINE

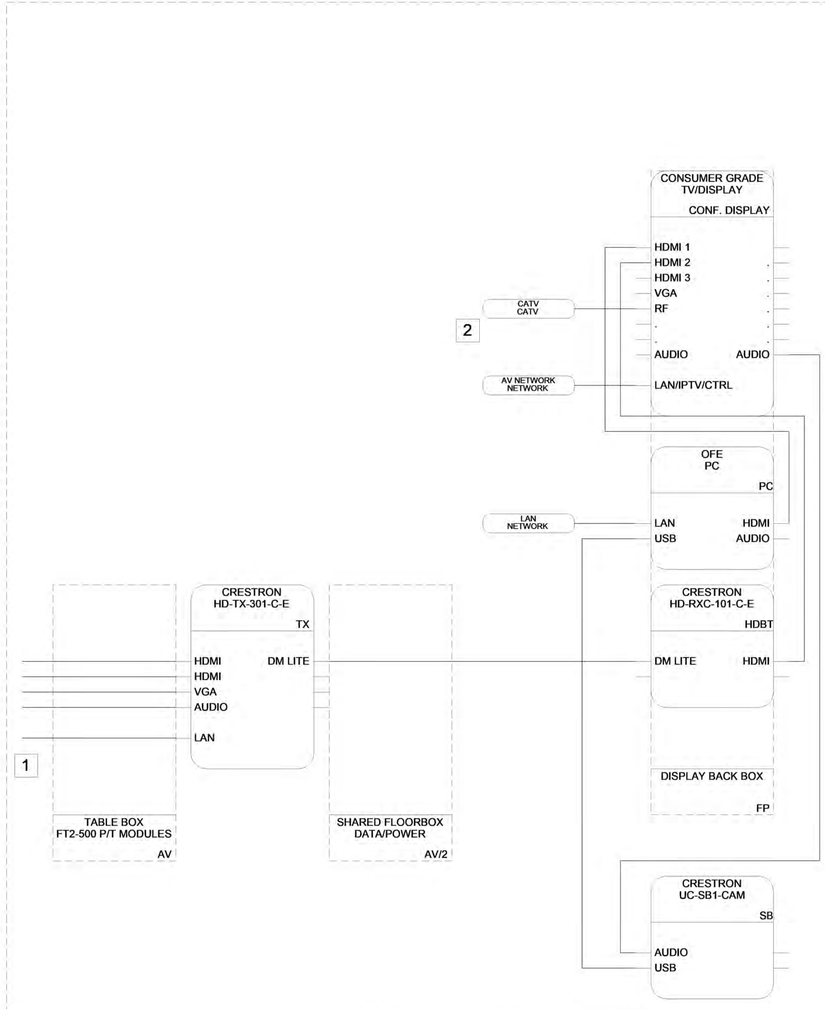

2 CONFERENCE ROOM 1114 AV ONE-LINE

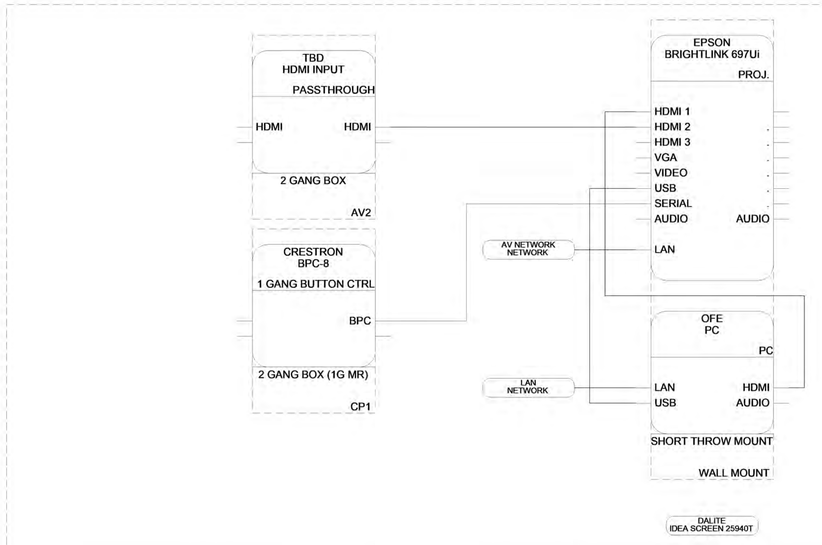

3 SWAT VEHICLE BAY 1516 AV ONE-LINE

ONE-LINE LEGEND

WIRETYPE: CABLE_TYPE

WIRETAG: CABLE_TYPE DEST

ON PAGE JUMPER: A1 A1

FLYOFFS: DEST SOURCE

FLYOFF USE: CABLE_TYPE DEST DEST

NETWORK TAG: CONNECT TO NETWORK_TYPE

WIRE TO EQUIPMENT NOT SHOWN

SIGNAL FLOW BASEBAND

SIGNAL FLOW NETWORK/IP

EQUIPMENT - FILLETED SOLID RECTANGLE

CONTAINER - DASHED RECTANGLE

GENERAL NOTES:

(SOME KEY NOTES MAY NOT APPLY TO THIS SHEET.)

1. REFER TO SYMBOL LEGEND FOR ADDITIONAL REQUIREMENTS, INCLUDING BUT NOT LIMITED TO, INSTALLATION OF RACEWAY, CABLING, AND DEVICES.
2. ALL AV EQUIPMENT SHALL BE PROVIDED BY THE CONTRACTOR, U.N.O. CONTRACTOR SHALL UTILIZE SPECIFICATION 27 41 00 IN CONJUNCTION WITH THESE DRAWINGS TO FULLY UNDERSTAND THE SCOPE OF WORK AND FUNCTIONALITY REQUIRED FOR THIS PROJECT.
3. AV ONE-LINE DIAGRAMS ARE SCHEMATIC IN NATURE WITH INTENT TO REPRESENT KEY AV EQUIPMENT AND SIGNAL FLOW. CONTRACTOR SHALL PROVIDE ALL NECESSARY COMPONENTS TO ENSURE THAT A "TURN-KEY" SOLUTION IS PROVIDED INCLUDING, BUT NOT BE LIMITED TO, BALUNS, POWER SUPPLIES, ACCESSORIES, ETC.
4. AV ONE-LINES MAY NOT REPRESENT EXACT QUANTITIES FOR ALL COMPONENTS, CONNECTION POINTS OR SYSTEM CABLES. REFER TO FLOOR PLANS, DETAILS, AND SPECIFICATIONS FOR ADDITIONAL INFORMATION.
5. CONTRACTOR SHALL PROVIDE ALL NECESSARY CONDUIT, CORE DRILLS AND/OR IN-SLAB TO IN-WALL CONDUIT TRANSITION POINTS TO ENSURE AV CABLING HAS UNOBSTRUCTED PATHWAY BETWEEN CONNECTION POINTS.
6. CONTRACTOR SHALL ENSURE THAT ALL AV RACEWAY INFRASTRUCTURE INCLUDING, BUT NOT LIMITED TO, CONDUIT, CORE DRILLS, FLOOR BOXES, PLENUM BOXES, BACK-BOXES, PULL BOXES, ETC. IS COORDINATED WITH ALL APPLICABLE CONTRACTORS, OWNER, ARCHITECT, AND ENGINEER (THROUGH THE SHOP DRAWING REVIEW PROCESS) PRIOR TO INSTALLATION.
7. CONTRACTOR SHALL PROVIDE ALL DATA OUTLET PATCH CORDS AND SPECIALIZED OR CUSTOM AV CABLES AS REQUIRED TO PROVIDE OWNER WITH A TURN-KEY AV SOLUTION.
8. CONTRACTOR SHALL COORDINATE PoE/LAN CONNECTIVITY FOR APPLICABLE AV DEVICES (SUCH AS CONTROL PANELS, ETC.) WITH NETWORK INTEGRATOR PRIOR TO INSTALLATION.
9. CONTRACTOR SHALL PROVIDE SEISMIC RESTRAINT SYSTEM FOR ALL CEILING LOUDSPEAKERS, PER ALL APPLICABLE BUILDING CODES.
10. STEREO AUDIO CONNECTIVITY IS NOT ALWAYS SHOWN ON AV ONE-LINES (TO MAINTAIN DRAWING CLARITY) BUT SHALL BE PROVIDED.
11. CONTRACTOR SHALL PRECISELY COORDINATE THE BROADCAST RADIO FREQUENCY SELECTION FOR ALL ELECTRONIC DEVICES (WITHIN THIS SCOPE OF WORK) WITH OWNER/OPERATOR AND ALL OTHER WIRELESS SYSTEMS OPERATING WITHIN THE BUILDING.
12. CONVERGED NETWORK DESIGNED AND PROVIDED BY OTHERS. CONTRACTOR TO COORDINATE PORT COUNTS, SPEED, AND CONFIGURATION PARAMETERS WITH NETWORK DESIGNER AND NETWORK CONTRACTOR.

KEY NOTES:

(SOME KEY NOTES MAY NOT APPLY TO THIS SHEET.)

1 PROVIDE ALL PASS-THRU CABLES (6')

2 CATV CONTROL VIA TV FACTORY REMOTE

3

4

5

6

BRINKLEY SARGENT WIGINTON ARCHITECTS

Architect: Brinkley Sargent Wigginton Architects (972) 960-9970
Landscape: Kendall Landscape Architecture (214) 739-3226
Structural: L.A. Fuess Partners, Inc (214) 593-1118
MEP: M-E Engineers (214) 741-1589
Civil: KSA Engineers, Inc (903) 236-7700
Technology: M-E Engineers (303) 421-6656

LONGVIEW POLICE DEPARTMENT

XXXX SOUTH ST. LONGVIEW, TEXAS 75601

History		
#	Date	Description

STATE OF TEXAS
ANDREW SHIVLEY
109010
LICENSED
PROFESSIONAL ENGINEER
ME Engineers, Inc.
F-10231
08/19/2020

AV ONE-LINES

BID ISSUE

20513
08/19/2020
AV004

8/17/2020 2:27:07 PM

C:\Revit Projects\2019\URL_CENTRAL_T1_Steven.Moses@me-engineers.com.rvt

© 2020 Brinkley Sargent Wigginton Architects, Inc.

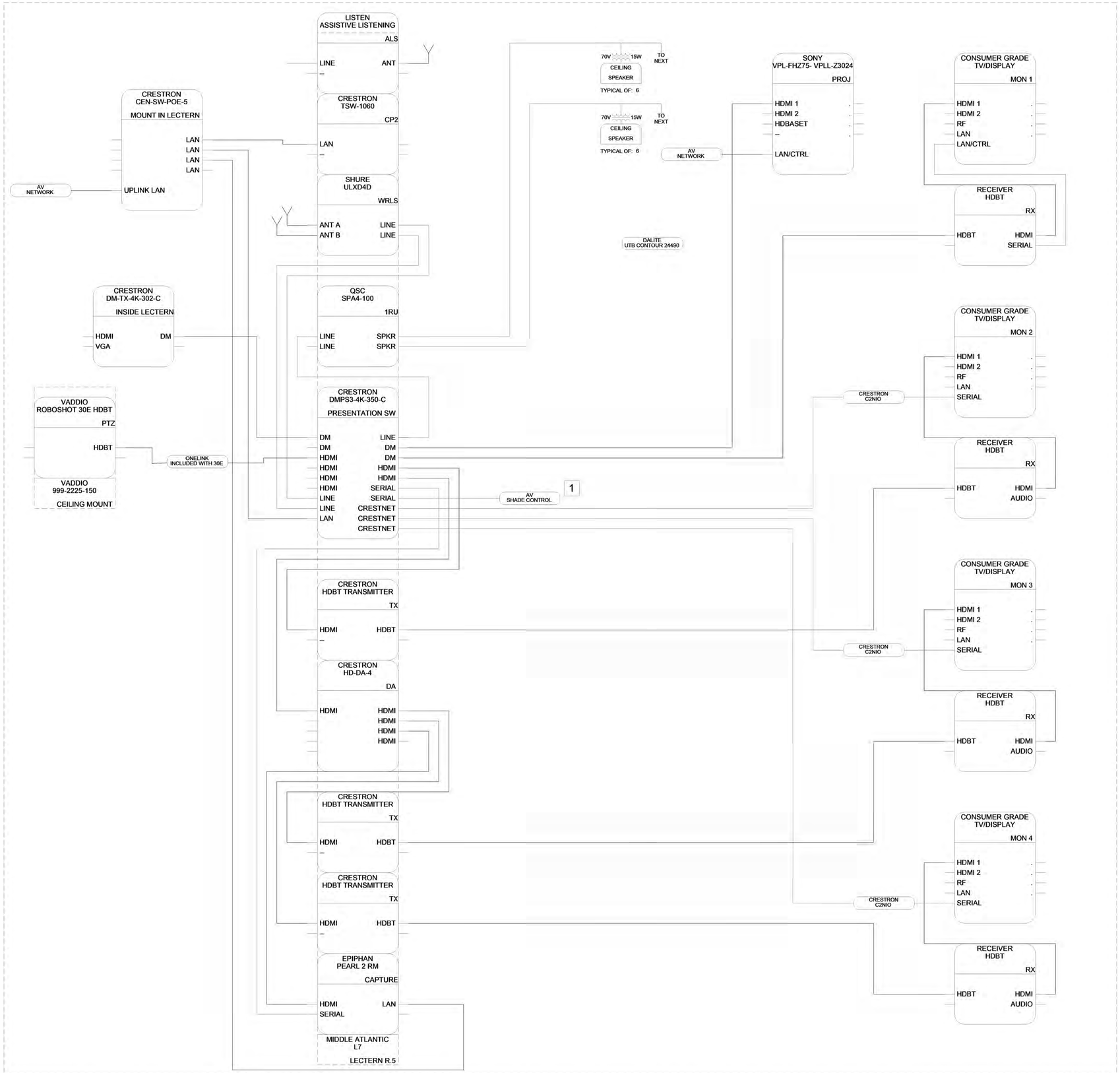

1 TRAINING ROOM 2004 AV ONE-LINE

ONE-LINE LEGEND

WIRETYPE: CABLE_TYPE

WIRETAG: CABLE_TYPE | DEST

ON PAGE JUMPER: A1 | A1

FLYOFFS: DEST | SOURCE

FLYOFF USE: CABLE_TYPE | DEST | DEST

NETWORK TAG: CONNECT TO NETWORK_TYPE

WIRE TO EQUIPMENT NOT SHOWN

SIGNAL FLOW BASEBAND

SIGNAL FLOW NETWORK/IP

EQUIPMENT - FILLETED SOLID RECTANGLE

CONTAINER - DASHED RECTANGLE

GENERAL NOTES:

(SOME KEY NOTES MAY NOT APPLY TO THIS SHEET.)

1. REFER TO SYMBOL LEGEND FOR ADDITIONAL REQUIREMENTS, INCLUDING BUT NOT LIMITED TO, INSTALLATION OF RACEWAY, CABLING, AND DEVICES.
2. ALL AV EQUIPMENT SHALL BE PROVIDED BY THE CONTRACTOR, U.N.O. CONTRACTOR SHALL UTILIZE SPECIFICATION 27 41 00 IN CONJUNCTION WITH THESE DRAWINGS TO FULLY UNDERSTAND THE SCOPE OF WORK AND FUNCTIONALITY REQUIRED FOR THIS PROJECT.
3. AV ONE-LINE DIAGRAMS ARE SCHEMATIC IN NATURE WITH INTENT TO REPRESENT KEY AV EQUIPMENT AND SIGNAL FLOW. CONTRACTOR SHALL PROVIDE ALL NECESSARY COMPONENTS TO ENSURE THAT A "TURN-KEY" SOLUTION IS PROVIDED INCLUDING, BUT NOT BE LIMITED TO, BALUNS, POWER SUPPLIES, ACCESSORIES, ETC.
4. AV ONE-LINES MAY NOT REPRESENT EXACT QUANTITIES FOR ALL COMPONENTS, CONNECTION POINTS OR SYSTEM CABLES. REFER TO FLOOR PLANS, DETAILS, AND SPECIFICATIONS FOR ADDITIONAL INFORMATION.
5. CONTRACTOR SHALL PROVIDE ALL NECESSARY CONDUIT, CORE DRILLS AND/OR IN-SLAB TO IN-WALL CONDUIT TRANSITION POINTS TO ENSURE AV CABLING HAS UNOBSTRUCTED PATHWAY BETWEEN CONNECTION POINTS.
6. CONTRACTOR SHALL ENSURE THAT ALL AV RACEWAY INFRASTRUCTURE INCLUDING, BUT NOT LIMITED TO, CONDUIT, CORE DRILLS, FLOOR BOXES, PLENUM BOXES, BACK-BOXES, PULL BOXES, ETC. IS COORDINATED WITH ALL APPLICABLE CONTRACTORS, OWNER, ARCHITECT, AND ENGINEER (THROUGH THE SHOP DRAWING REVIEW PROCESS) PRIOR TO INSTALLATION
7. CONTRACTOR SHALL PROVIDE ALL DATA OUTLET PATCH CORDS AND SPECIALIZED OR CUSTOM AV CABLES AS REQUIRED TO PROVIDE OWNER WITH A TURN-KEY AV SOLUTION.
8. CONTRACTOR SHALL COORDINATE PoE/LAN CONNECTIVITY FOR APPLICABLE AV DEVICES (SUCH AS CONTROL PANELS, ETC) WITH NETWORK INTEGRATOR PRIOR TO INSTALLATION.
9. CONTRACTOR SHALL PROVIDE SEISMIC RESTRAINT SYSTEM FOR ALL CEILING LOUDSPEAKERS, PER ALL APPLICABLE BUILDING CODES.
10. STEREO AUDIO CONNECTIVITY IS NOT ALWAYS SHOWN ON AV ONE-LINES (TO MAINTAIN DRAWING CLARITY) BUT SHALL BE PROVIDED.
11. CONTRACTOR SHALL PRECISELY COORDINATE THE BROADCAST RADIO FREQUENCY SELECTION FOR ALL ELECTRONIC DEVICES (WITHIN THIS SCOPE OF WORK) WITH OWNER/OPERATOR AND ALL OTHER WIRELESS SYSTEMS OPERATING WITHIN THE BUILDING.
12. CONVERGED NETWORK DESIGNED AND PROVIDED BY OTHERS. CONTRACTOR TO COORDINATE PORT COUNTS, SPEED, AND CONFIGURATION PARAMETERS WITH NETWORK DESIGNER AND NETWORK CONTRACTOR.

KEY NOTES:

(SOME KEY NOTES MAY NOT APPLY TO THIS SHEET.)

1. PROVIDE INTEGRATION TO LIGHTING AND SHADE CONTROL
2.
3.
4.
5.
6.

BRINKLEY SARGENT WIGINTON ARCHITECTS

Architect: Brinkley Sargent Wigginton Architects (972) 960-9970
Landscape: Kendall Landscape Architecture (214) 739-3226
Structural: L.A. Fuess Partners, Inc (214) 593-1118
MEP: M-E Engineers (214) 741-1589
Civil: KSA Engineers, Inc (903) 236-7700
Technology: M-E Engineers (303) 421-6656

LONGVIEW POLICE DEPARTMENT

XXXX SOUTH ST. LONGVIEW, TEXAS 75601

History		
#	Date	Description

STATE OF TEXAS
ANDREW SHIVLEY
109010
LICENSED PROFESSIONAL ENGINEER
ME Engineers, Inc.
F-10231
08/19/2020

AV ONE-LINES

BID ISSUE

20513
08/19/2020
AV005

6/17/2020 2:27:12 PM

C:\Revit Projects\2015\LPD_CENTRAL_115_Steven.Moyer@brw-engineers.com.rvt

© 2020 Brinkley Sargent Wigginton Architects, Inc.

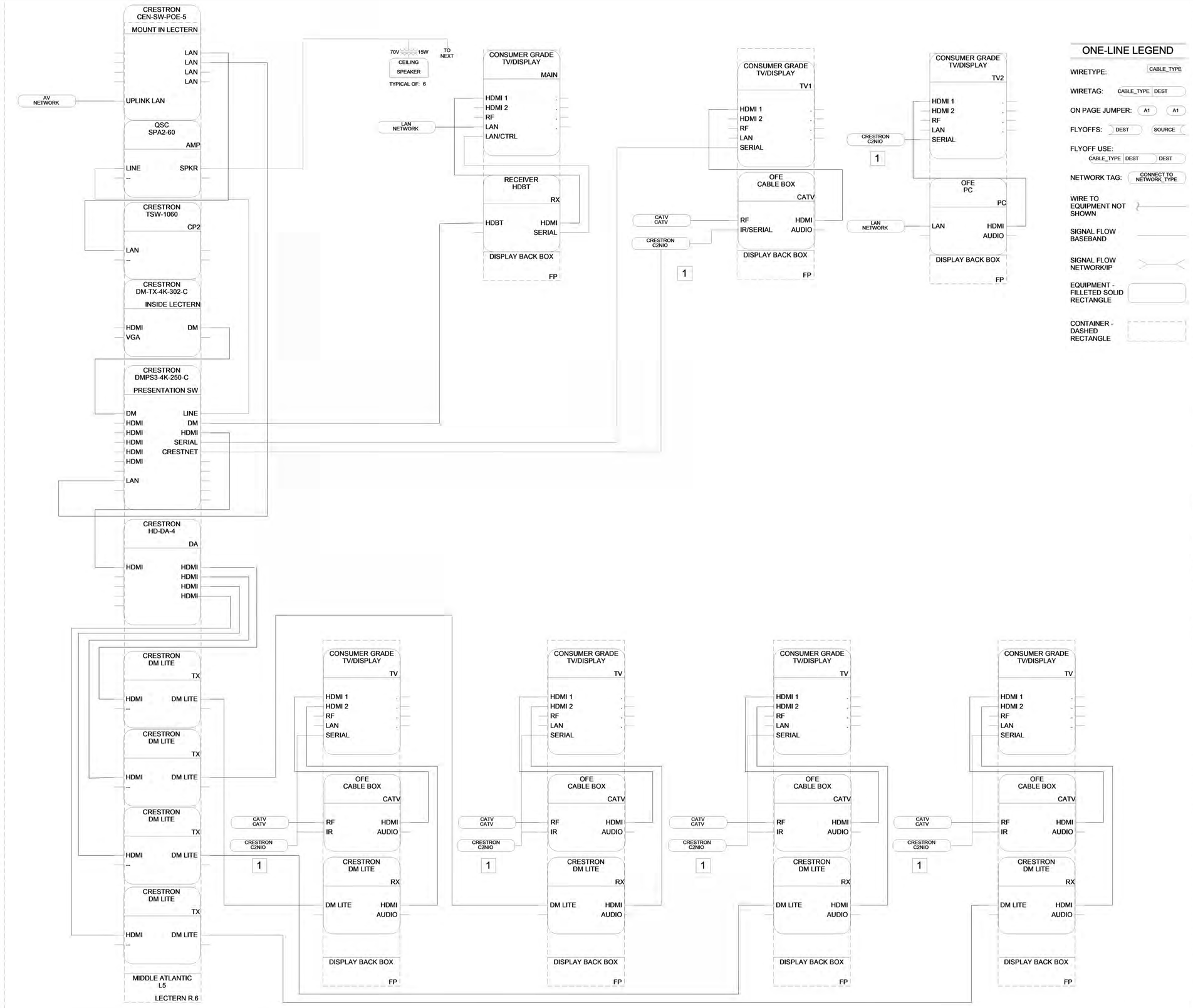

1 BRIEFING ROOM 2113 AV ONE-LINE

ONE-LINE LEGEND

WIRETYPE: CABLE_TYPE

WIRETAG: CABLE_TYPE DEST

ON PAGE JUMPER: A1 A1

FLYOFFS: DEST SOURCE

FLYOFF USE: CABLE_TYPE DEST DEST

NETWORK TAG: CONNECT TO NETWORK_TYPE

WIRE TO EQUIPMENT NOT SHOWN

SIGNAL FLOW BASEBAND

SIGNAL FLOW NETWORK/IP

EQUIPMENT - FILLETED SOLID RECTANGLE

CONTAINER - DASHED RECTANGLE

GENERAL NOTES:
(SOME KEY NOTES MAY NOT APPLY TO THIS SHEET.)

1. REFER TO SYMBOL LEGEND FOR ADDITIONAL REQUIREMENTS, INCLUDING BUT NOT LIMITED TO, INSTALLATION OF RACEWAY, CABLING, AND DEVICES.
2. ALL AV EQUIPMENT SHALL BE PROVIDED BY THE CONTRACTOR, U.N.O. CONTRACTOR SHALL UTILIZE SPECIFICATION 27 41 00 IN CONJUNCTION WITH THESE DRAWINGS TO FULLY UNDERSTAND THE SCOPE OF WORK AND FUNCTIONALITY REQUIRED FOR THIS PROJECT.
3. AV ONE-LINE DIAGRAMS ARE SCHEMATIC IN NATURE WITH INTENT TO REPRESENT KEY AV EQUIPMENT AND SIGNAL FLOW. CONTRACTOR SHALL PROVIDE ALL NECESSARY COMPONENTS TO ENSURE THAT A "TURN-KEY" SOLUTION IS PROVIDED INCLUDING, BUT NOT BE LIMITED TO, BALUNS, POWER SUPPLIES, ACCESSORIES, ETC.
4. AV ONE-LINES MAY NOT REPRESENT EXACT QUANTITIES FOR ALL COMPONENTS, CONNECTION POINTS OR SYSTEM CABLES. REFER TO FLOOR PLANS, DETAILS, AND SPECIFICATIONS FOR ADDITIONAL INFORMATION.
5. CONTRACTOR SHALL PROVIDE ALL NECESSARY CONDUIT, CORE DRILLS AND/OR IN-SLAB TO IN-WALL CONDUIT TRANSITION POINTS TO ENSURE AV CABLING HAS UNOBSTRUCTED PATHWAY BETWEEN CONNECTION POINTS.
6. CONTRACTOR SHALL ENSURE THAT ALL AV RACEWAY INFRASTRUCTURE INCLUDING, BUT NOT LIMITED TO, CONDUIT, CORE DRILLS, FLOOR BOXES, PLENUM BOXES, BACK-BOXES, PULL BOXES, ETC. IS COORDINATED WITH ALL APPLICABLE CONTRACTORS, OWNER, ARCHITECT, AND ENGINEER (THROUGH THE SHOP DRAWING REVIEW PROCESS) PRIOR TO INSTALLATION
7. CONTRACTOR SHALL PROVIDE ALL DATA OUTLET PATCH CORDS AND SPECIALIZED OR CUSTOM AV CABLES AS REQUIRED TO PROVIDE OWNER WITH A TURN-KEY AV SOLUTION.
8. CONTRACTOR SHALL COORDINATE PoE/LAN CONNECTIVITY FOR APPLICABLE AV DEVICES (SUCH AS CONTROL PANELS, ETC.) WITH NETWORK INTEGRATOR PRIOR TO INSTALLATION.
9. CONTRACTOR SHALL PROVIDE SEISMIC RESTRAINT SYSTEM FOR ALL CEILING LOUDSPEAKERS, PER ALL APPLICABLE BUILDING CODES.
10. STEREO AUDIO CONNECTIVITY IS NOT ALWAYS SHOWN ON AV ONE-LINES (TO MAINTAIN DRAWING CLARITY) BUT SHALL BE PROVIDED.
11. CONTRACTOR SHALL PRECISELY COORDINATE THE BROADCAST RADIO FREQUENCY SELECTION FOR ALL ELECTRONIC DEVICES (WITHIN THIS SCOPE OF WORK) WITH OWNER/OPERATOR AND ALL OTHER WIRELESS SYSTEMS OPERATING WITHIN THE BUILDING.
12. CONVERGED NETWORK DESIGNED AND PROVIDED BY OTHERS. CONTRACTOR TO COORDINATE PORT COUNTS, SPEED, AND CONFIGURATION PARAMETERS WITH NETWORK DESIGNER AND NETWORK CONTRACTOR.

KEY NOTES:
(SOME KEY NOTES MAY NOT APPLY TO THIS SHEET.)

1. DAISY CHAIN ALL COMM EXPANDERS CRESTNET
2.
3.
4.
5.
6.

BRINKLEY SARGENT WIGINTON ARCHITECTS

Architect: Brinkley Sargent Wigginton Architects (972) 960-9970
Landscape: Kendall Landscape Architecture (214) 739-3226
Structural: L.A. Fuess Partners, Inc (214) 593-1118
MEP: M-E Engineers (214) 741-1589
Civil: KSA Engineers, Inc (903) 236-7700
Technology: M-E Engineers (303) 421-6656

LONGVIEW POLICE DEPARTMENT

XXXX SOUTH ST. LONGVIEW, TEXAS 75601

History		
#	Date	Description

STATE OF TEXAS
ANDREW SHIVLEY
109010
LICENSED PROFESSIONAL ENGINEER
ME Engineers, Inc.
F-10231
08/19/2020

AV ONE-LINES

BID ISSUE

20513
08/19/2020
AV006

8/17/2020 2:27:18 PM

C:\Revit Projects\20513\LPD_CENTRAL_119_Steven.Moxwell@me-engineers.com.rvt

© 2020 Brinkley Sargent Wigintion Architects, Inc.

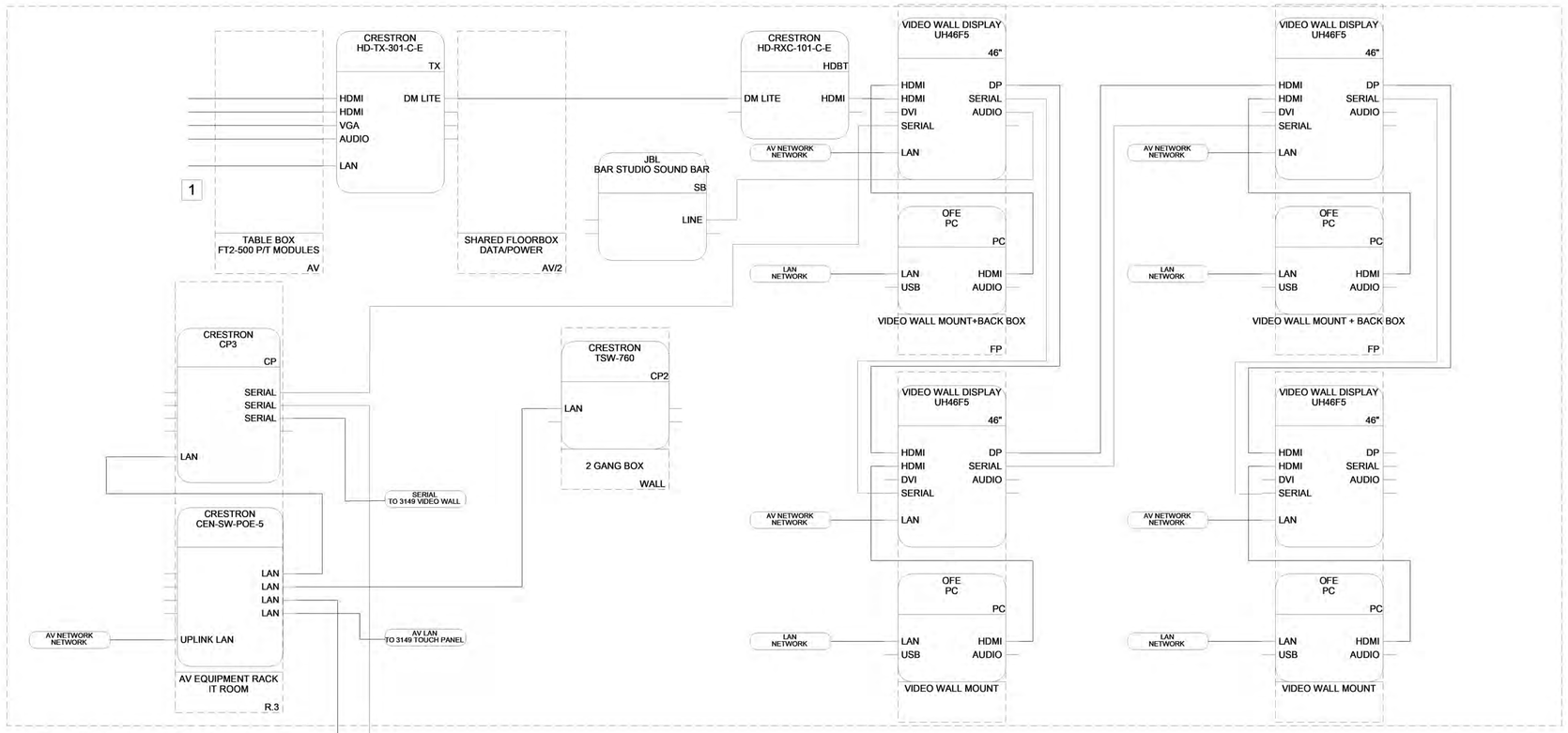

1 PLANNING RESEARCH ROOM 2115 AV ONE-LINE

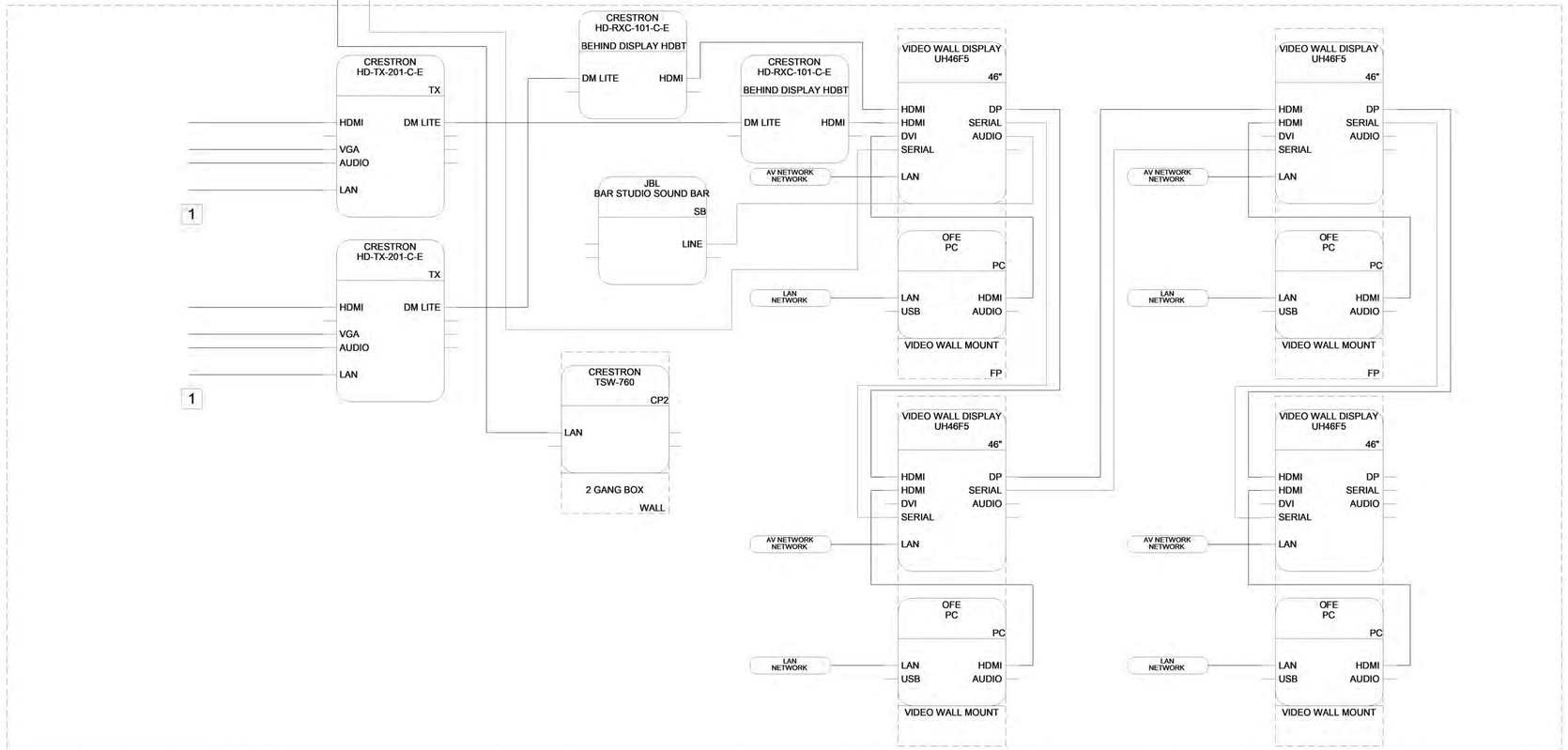

2 SPECIAL INVESTIGATIONS ROOM 2144 AV ONE-LINE

ONE-LINE LEGEND

WIRETYPE: CABLE_TYPE

WIRETAG: CABLE_TYPE DEST

ON PAGE JUMPER: A1 A1

FLYOFFS: DEST SOURCE

FLYOFF USE: CABLE_TYPE DEST DEST

NETWORK TAG: CONNECT TO NETWORK_TYPE

WIRE TO EQUIPMENT NOT SHOWN

SIGNAL FLOW BASEBAND

SIGNAL FLOW NETWORK/IP

EQUIPMENT - FILLETED SOLID RECTANGLE

CONTAINER - DASHED RECTANGLE

GENERAL NOTES:

(SOME KEY NOTES MAY NOT APPLY TO THIS SHEET.)

1. REFER TO SYMBOL LEGEND FOR ADDITIONAL REQUIREMENTS, INCLUDING BUT NOT LIMITED TO, INSTALLATION OF RACEWAY, CABLING, AND DEVICES.
2. ALL AV EQUIPMENT SHALL BE PROVIDED BY THE CONTRACTOR, U.N.O. CONTRACTOR SHALL UTILIZE SPECIFICATION 27 41 00 IN CONJUNCTION WITH THESE DRAWINGS TO FULLY UNDERSTAND THE SCOPE OF WORK AND FUNCTIONALITY REQUIRED FOR THIS PROJECT.
3. AV ONE-LINE DIAGRAMS ARE SCHEMATIC IN NATURE WITH INTENT TO REPRESENT KEY AV EQUIPMENT AND SIGNAL FLOW. CONTRACTOR SHALL PROVIDE ALL NECESSARY COMPONENTS TO ENSURE THAT A "TURN-KEY" SOLUTION IS PROVIDED INCLUDING, BUT NOT BE LIMITED TO, BALUNS, POWER SUPPLIES, ACCESSORIES, ETC.
4. AV ONE-LINES MAY NOT REPRESENT EXACT QUANTITIES FOR ALL COMPONENTS, CONNECTION POINTS OR SYSTEM CABLES. REFER TO FLOOR PLANS, DETAILS, AND SPECIFICATIONS FOR ADDITIONAL INFORMATION.
5. CONTRACTOR SHALL PROVIDE ALL NECESSARY CONDUIT, CORE DRILLS AND/OR IN-SLAB TO IN-WALL CONDUIT TRANSITION POINTS TO ENSURE AV CABLING HAS UNOBSTRUCTED PATHWAY BETWEEN CONNECTION POINTS.
6. CONTRACTOR SHALL ENSURE THAT ALL AV RACEWAY INFRASTRUCTURE INCLUDING, BUT NOT LIMITED TO, CONDUIT, CORE DRILLS, FLOOR BOXES, PLENUM BOXES, BACK-BOXES, PULL BOXES, ETC. IS COORDINATED WITH ALL APPLICABLE CONTRACTORS, OWNER, ARCHITECT, AND ENGINEER (THROUGH THE SHOP DRAWING REVIEW PROCESS) PRIOR TO INSTALLATION
7. CONTRACTOR SHALL PROVIDE ALL DATA OUTLET PATCH CORDS AND SPECIALIZED OR CUSTOM AV CABLES AS REQUIRED TO PROVIDE OWNER WITH A TURN-KEY AV SOLUTION.
8. CONTRACTOR SHALL COORDINATE PoE/LAN CONNECTIVITY FOR APPLICABLE AV DEVICES (SUCH AS CONTROL PANELS, ETC.) WITH NETWORK INTEGRATOR PRIOR TO INSTALLATION.
9. CONTRACTOR SHALL PROVIDE SEISMIC RESTRAINT SYSTEM FOR ALL CEILING LOUDSPEAKERS, PER ALL APPLICABLE BUILDING CODES.
10. STEREO AUDIO CONNECTIVITY IS NOT ALWAYS SHOWN ON AV ONE-LINES (TO MAINTAIN DRAWING CLARITY) BUT SHALL BE PROVIDED.
11. CONTRACTOR SHALL PRECISELY COORDINATE THE BROADCAST RADIO FREQUENCY SELECTION FOR ALL ELECTRONIC DEVICES (WITHIN THIS SCOPE OF WORK) WITH OWNER/OPERATOR AND ALL OTHER WIRELESS SYSTEMS OPERATING WITHIN THE BUILDING.
12. CONVERGED NETWORK DESIGNED AND PROVIDED BY OTHERS. CONTRACTOR TO COORDINATE PORT COUNTS, SPEED, AND CONFIGURATION PARAMETERS WITH NETWORK DESIGNER AND NETWORK CONTRACTOR.

KEY NOTES:

(SOME KEY NOTES MAY NOT APPLY TO THIS SHEET.)

1 PROVIDE ALL PASS-THRU CABLES (6')

2

3

4

5

6

BRINKLEY SARGENT WIGINTON ARCHITECTS

Architect: Brinkley Sargent Wigintion Architects (972) 960-9970
Landscape: Kendall Landscape Architecture (214) 739-3226
Structural: L.A. Fuess Partners, Inc (214) 593-1118
MEP: M-E Engineers (214) 741-1589
Civil: KSA Engineers, Inc (903) 236-7700
Technology: M-E Engineers (303) 421-6656

LONGVIEW POLICE DEPARTMENT

XXXX SOUTH ST. LONGVIEW, TEXAS 75601

History		
#	Date	Description

STATE OF TEXAS
ANDREW SHIVLEY
109010
LICENSED PROFESSIONAL ENGINEER
ME Engineers, Inc.
F-10231
08/19/2020

AV ONE-LINES

BID ISSUE

20513
08/19/2020
AV007

6/17/2020 3:27:23 PM

C:\Revit Projects\2019\LPD_CENTRAL_719_Steven.Moyer@me-engineers.com.rvt

© 2020 Brinkley Sargent Wigginton Architects, Inc.

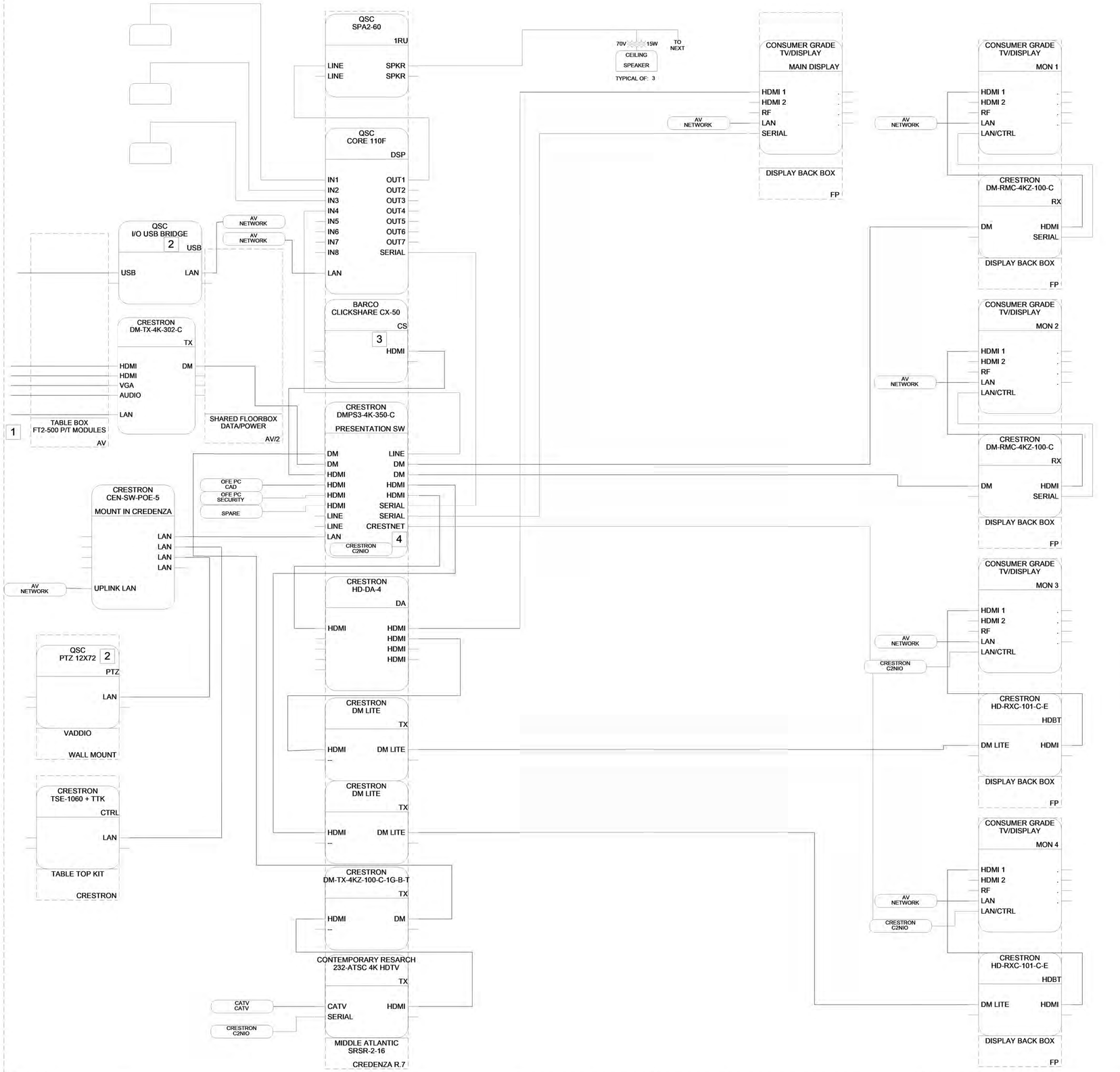

1 CONFERENCE ROOM 3008 AV ONE-LINE

ONE-LINE LEGEND

WIRETYPE: CABLE_TYPE

WIRETAG: CABLE_TYPE | DEST

ON PAGE JUMPER: A1 A1

FLYOFFS: DEST SOURCE

FLYOFF USE: CABLE_TYPE | DEST DEST

NETWORK TAG: CONNECT TO NETWORK_TYPE

WIRE TO EQUIPMENT NOT SHOWN

SIGNAL FLOW BASEBAND

SIGNAL FLOW NETWORK/IP

EQUIPMENT - FILLETED SOLID RECTANGLE

CONTAINER - DASHED RECTANGLE

GENERAL NOTES:

(SOME KEY NOTES MAY NOT APPLY TO THIS SHEET.)

1. REFER TO SYMBOL LEGEND FOR ADDITIONAL REQUIREMENTS, INCLUDING BUT NOT LIMITED TO, INSTALLATION OF RACEWAY, CABLING, AND DEVICES.
2. ALL AV EQUIPMENT SHALL BE PROVIDED BY THE CONTRACTOR, U.N.O. CONTRACTOR SHALL UTILIZE SPECIFICATION 27 41 00 IN CONJUNCTION WITH THESE DRAWINGS TO FULLY UNDERSTAND THE SCOPE OF WORK AND FUNCTIONALITY REQUIRED FOR THIS PROJECT.
3. AV ONE-LINE DIAGRAMS ARE SCHEMATIC IN NATURE WITH INTENT TO REPRESENT KEY AV EQUIPMENT AND SIGNAL FLOW. CONTRACTOR SHALL PROVIDE ALL NECESSARY COMPONENTS TO ENSURE THAT A "TURN-KEY" SOLUTION IS PROVIDED INCLUDING, BUT NOT BE LIMITED TO, BALUNS, POWER SUPPLIES, ACCESSORIES, ETC.
4. AV ONE-LINES MAY NOT REPRESENT EXACT QUANTITIES FOR ALL COMPONENTS, CONNECTION POINTS OR SYSTEM CABLES. REFER TO FLOOR PLANS, DETAILS, AND SPECIFICATIONS FOR ADDITIONAL INFORMATION.
5. CONTRACTOR SHALL PROVIDE ALL NECESSARY CONDUIT, CORE DRILLS AND/OR IN-SLAB TO IN-WALL CONDUIT TRANSITION POINTS TO ENSURE AV CABLING HAS UNOBSTRUCTED PATHWAY BETWEEN CONNECTION POINTS.
6. CONTRACTOR SHALL ENSURE THAT ALL AV RACEWAY INFRASTRUCTURE INCLUDING, BUT NOT LIMITED TO, CONDUIT, CORE DRILLS, FLOOR BOXES, PLENUM BOXES, BACK-BOXES, PULL BOXES, ETC. IS COORDINATED WITH ALL APPLICABLE CONTRACTORS, OWNER, ARCHITECT, AND ENGINEER (THROUGH THE SHOP DRAWING REVIEW PROCESS) PRIOR TO INSTALLATION.
7. CONTRACTOR SHALL PROVIDE ALL DATA OUTLET PATCH CORDS AND SPECIALIZED OR CUSTOM AV CABLES AS REQUIRED TO PROVIDE OWNER WITH A TURN-KEY AV SOLUTION.
8. CONTRACTOR SHALL COORDINATE PoE/LAN CONNECTIVITY FOR APPLICABLE AV DEVICES (SUCH AS CONTROL PANELS, ETC.) WITH NETWORK INTEGRATOR PRIOR TO INSTALLATION.
9. CONTRACTOR SHALL PROVIDE SEISMIC RESTRAINT SYSTEM FOR ALL CEILING LOUDSPEAKERS, PER ALL APPLICABLE BUILDING CODES.
10. STEREO AUDIO CONNECTIVITY IS NOT ALWAYS SHOWN ON AV ONE-LINES (TO MAINTAIN DRAWING CLARITY) BUT SHALL BE PROVIDED.
11. CONTRACTOR SHALL PRECISELY COORDINATE THE BROADCAST RADIO FREQUENCY SELECTION FOR ALL ELECTRONIC DEVICES (WITHIN THIS SCOPE OF WORK) WITH OWNER/OPERATOR AND ALL OTHER WIRELESS SYSTEMS OPERATING WITHIN THE BUILDING.
12. CONVERGED NETWORK DESIGNED AND PROVIDED BY OTHERS. CONTRACTOR TO COORDINATE PORT COUNTS, SPEED, AND CONFIGURATION PARAMETERS WITH NETWORK DESIGNER AND NETWORK CONTRACTOR.

KEY NOTES:

(SOME KEY NOTES MAY NOT APPLY TO THIS SHEET.)

1. PROVIDE ALL PASS-THRU CABLES (6')
2. DEDUCT ALTERNATE #1
3. BARCO CLICKSHARE OFFERS WIRELESS ANNOTATION. PROVIDE TRAINING FOR THIS FEATURE.
4. PROVIDE INTEGRATION TO LIGHTING AND SHADE CONTROL
5.
6.

BRINKLEY SARGENT WIGGINTON ARCHITECTS

Architect: Brinkley Sargent Wigginton Architects (972) 960-9970
Landscape: Kendall Landscape Architecture (214) 739-3226
Structural: L.A. Fuess Partners, Inc (214) 593-1118
MEP: M-E Engineers (214) 741-1589
Civil: KSA Engineers, Inc (903) 236-7700
Technology: M-E Engineers (303) 421-6656

LONGVIEW POLICE DEPARTMENT

XXXX SOUTH ST. LONGVIEW, TEXAS 75601

History		
#	Date	Description

STATE OF TEXAS
ANDREW SHIVLEY
109010
LICENSED
PROFESSIONAL ENGINEER
ME Engineers, Inc.
F-10231
08/19/2020

AV ONE-LINES

BID ISSUE

20513
08/19/2020
AV008

8/17/2020 2:27:29 PM

C:\Revit Projects\2019\LPD_CENTRAL_119_Steven.Maxwell@me-engineers.com.rvt

© 2020 Brinkley Sargent Wigginton Architects, Inc.

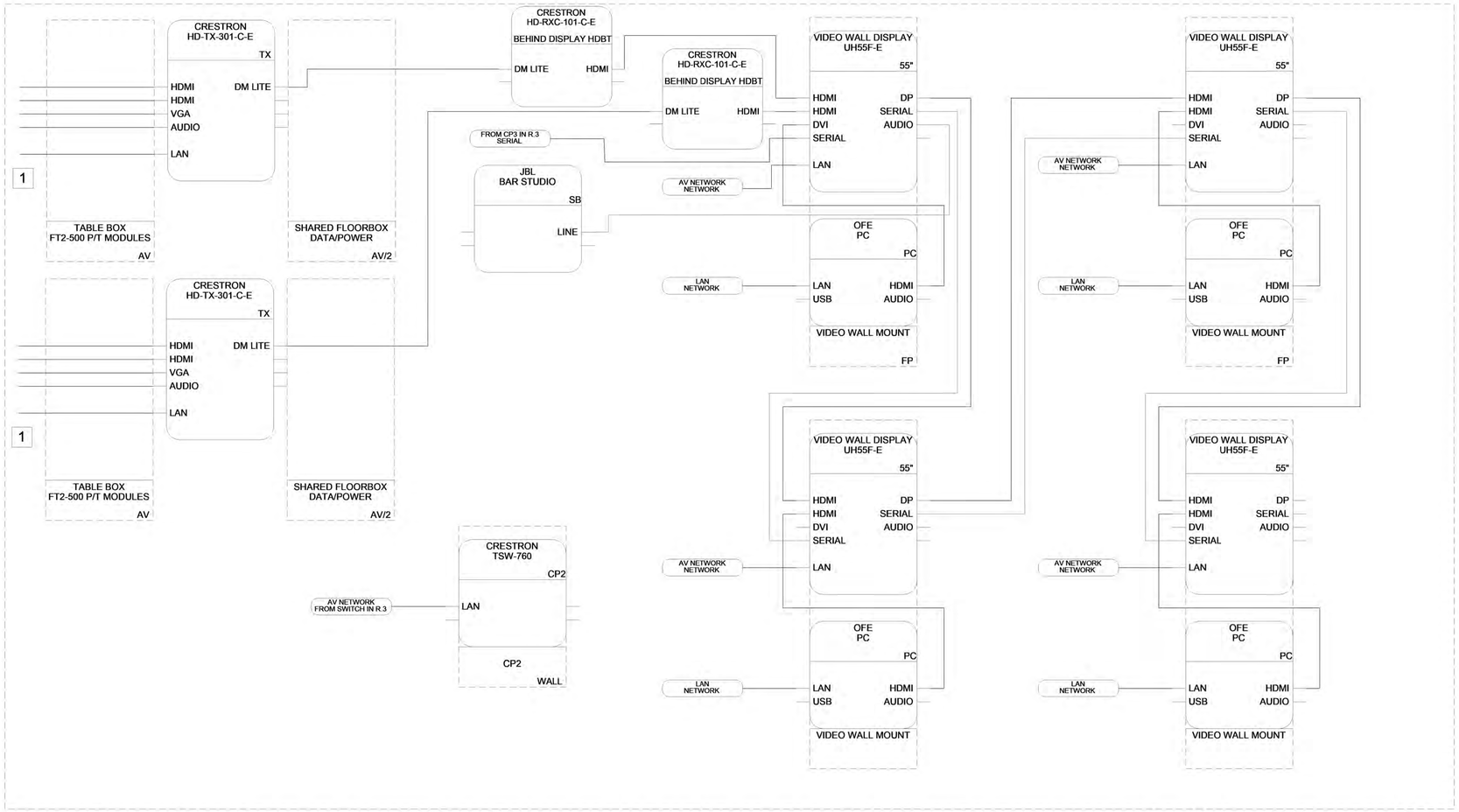

1 EVIDENCE/STRATEGY ROOM 3149 AV ONE-LINE

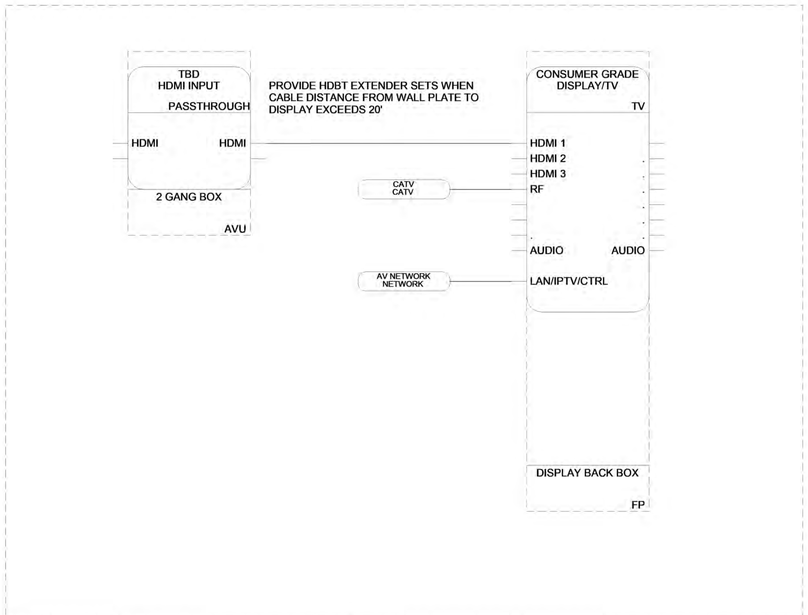

2 TYPICAL CONFERENCE ROOM

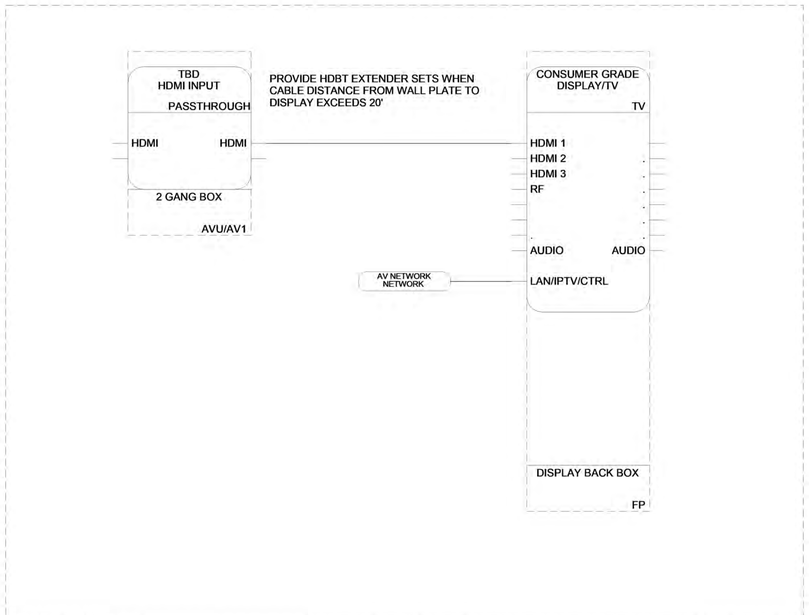

3 TYPICAL OFFICE

ONE-LINE LEGEND

WIRETYPE: CABLE_TYPE

WIRETAG: CABLE_TYPE | DEST

ON PAGE JUMPER: A1 A1

FLYOFFS: DEST SOURCE

FLYOFF USE: CABLE_TYPE | DEST | DEST

NETWORK TAG: CONNECT TO NETWORK_TYPE

WIRE TO EQUIPMENT NOT SHOWN

SIGNAL FLOW BASEBAND

SIGNAL FLOW NETWORK/IP

EQUIPMENT - FILLETED SOLID RECTANGLE

CONTAINER - DASHED RECTANGLE

GENERAL NOTES:
(SOME KEY NOTES MAY NOT APPLY TO THIS SHEET.)

1. REFER TO SYMBOL LEGEND FOR ADDITIONAL REQUIREMENTS, INCLUDING BUT NOT LIMITED TO, INSTALLATION OF RACEWAY, CABLING, AND DEVICES.
2. ALL AV EQUIPMENT SHALL BE PROVIDED BY THE CONTRACTOR, U.N.O. CONTRACTOR SHALL UTILIZE SPECIFICATION 27 41 00 IN CONJUNCTION WITH THESE DRAWINGS TO FULLY UNDERSTAND THE SCOPE OF WORK AND FUNCTIONALITY REQUIRED FOR THIS PROJECT.
3. AV ONE-LINE DIAGRAMS ARE SCHEMATIC IN NATURE WITH INTENT TO REPRESENT KEY AV EQUIPMENT AND SIGNAL FLOW. CONTRACTOR SHALL PROVIDE ALL NECESSARY COMPONENTS TO ENSURE THAT A "TURN-KEY" SOLUTION IS PROVIDED INCLUDING, BUT NOT BE LIMITED TO, BALUNS, POWER SUPPLIES, ACCESSORIES, ETC.
4. AV ONE-LINES MAY NOT REPRESENT EXACT QUANTITIES FOR ALL COMPONENTS, CONNECTION POINTS OR SYSTEM CABLES. REFER TO FLOOR PLANS, DETAILS, AND SPECIFICATIONS FOR ADDITIONAL INFORMATION.
5. CONTRACTOR SHALL PROVIDE ALL NECESSARY CONDUIT, CORE DRILLS AND/OR IN-SLAB TO IN-WALL CONDUIT TRANSITION POINTS TO ENSURE AV CABLING HAS UNOBSTRUCTED PATHWAY BETWEEN CONNECTION POINTS.
6. CONTRACTOR SHALL ENSURE THAT ALL AV RACEWAY INFRASTRUCTURE INCLUDING, BUT NOT LIMITED TO, CONDUIT, CORE DRILLS, FLOOR BOXES, PLENUM BOXES, BACK-BOXES, PULL BOXES, ETC. IS COORDINATED WITH ALL APPLICABLE CONTRACTORS, OWNER, ARCHITECT, AND ENGINEER (THROUGH THE SHOP DRAWING REVIEW PROCESS) PRIOR TO INSTALLATION
7. CONTRACTOR SHALL PROVIDE ALL DATA OUTLET PATCH CORDS AND SPECIALIZED OR CUSTOM AV CABLES AS REQUIRED TO PROVIDE OWNER WITH A TURN-KEY AV SOLUTION.
8. CONTRACTOR SHALL COORDINATE PoE/LAN CONNECTIVITY FOR APPLICABLE AV DEVICES (SUCH AS CONTROL PANELS, ETC.) WITH NETWORK INTEGRATOR PRIOR TO INSTALLATION.
9. CONTRACTOR SHALL PROVIDE SEISMIC RESTRAINT SYSTEM FOR ALL CEILING LOUDSPEAKERS, PER ALL APPLICABLE BUILDING CODES.
10. STEREO AUDIO CONNECTIVITY IS NOT ALWAYS SHOWN ON AV ONE-LINES (TO MAINTAIN DRAWING CLARITY) BUT SHALL BE PROVIDED.
11. CONTRACTOR SHALL PRECISELY COORDINATE THE BROADCAST RADIO FREQUENCY SELECTION FOR ALL ELECTRONIC DEVICES (WITHIN THIS SCOPE OF WORK) WITH OWNER/OPERATOR AND ALL OTHER WIRELESS SYSTEMS OPERATING WITHIN THE BUILDING.
12. CONVERGED NETWORK DESIGNED AND PROVIDED BY OTHERS. CONTRACTOR TO COORDINATE PORT COUNTS, SPEED, AND CONFIGURATION PARAMETERS WITH NETWORK DESIGNER AND NETWORK CONTRACTOR.

KEY NOTES:
(SOME KEY NOTES MAY NOT APPLY TO THIS SHEET.)

1
2
3
4
5
6

BRINKLEY SARGENT WIGINTON ARCHITECTS

Architect: Brinkley Sargent Wigginton Architects (972) 960-9970
Landscape: Kendall Landscape Architecture (214) 739-3226
Structural: L.A. Fuess Partners, Inc (214) 593-1118
MEP: M-E Engineers (214) 741-1589
Civil: KSA Engineers, Inc (903) 236-7700
Technology: M-E Engineers (303) 421-6656

LONGVIEW POLICE DEPARTMENT

XXXX SOUTH ST. LONGVIEW, TEXAS 75601

History

#	Date	Description

STATE OF TEXAS
ANDREW SHIVLEY
109010
LICENSED
PROFESSIONAL ENGINEER
ME Engineers, Inc.
F-10231
08/19/2020

AV ONE-LINES

BID ISSUE

20513
08/19/2020
AV009

8/17/2020 2:27:35 PM
C:\Revit Projects\20513\LPD_CENTRAL_119_Steven.Moxwell@me-engineers.com.rvt

© 2020 Brinkley Sargent Wigginton Architects, Inc.

GENERAL NOTES:

1. REFER TO SYMBOL LEGEND FOR ADDITIONAL REQUIREMENTS, INCLUDING BUT NOT LIMITED TO, INSTALLATION OF RACEWAY, CABLING, AND DEVICES.

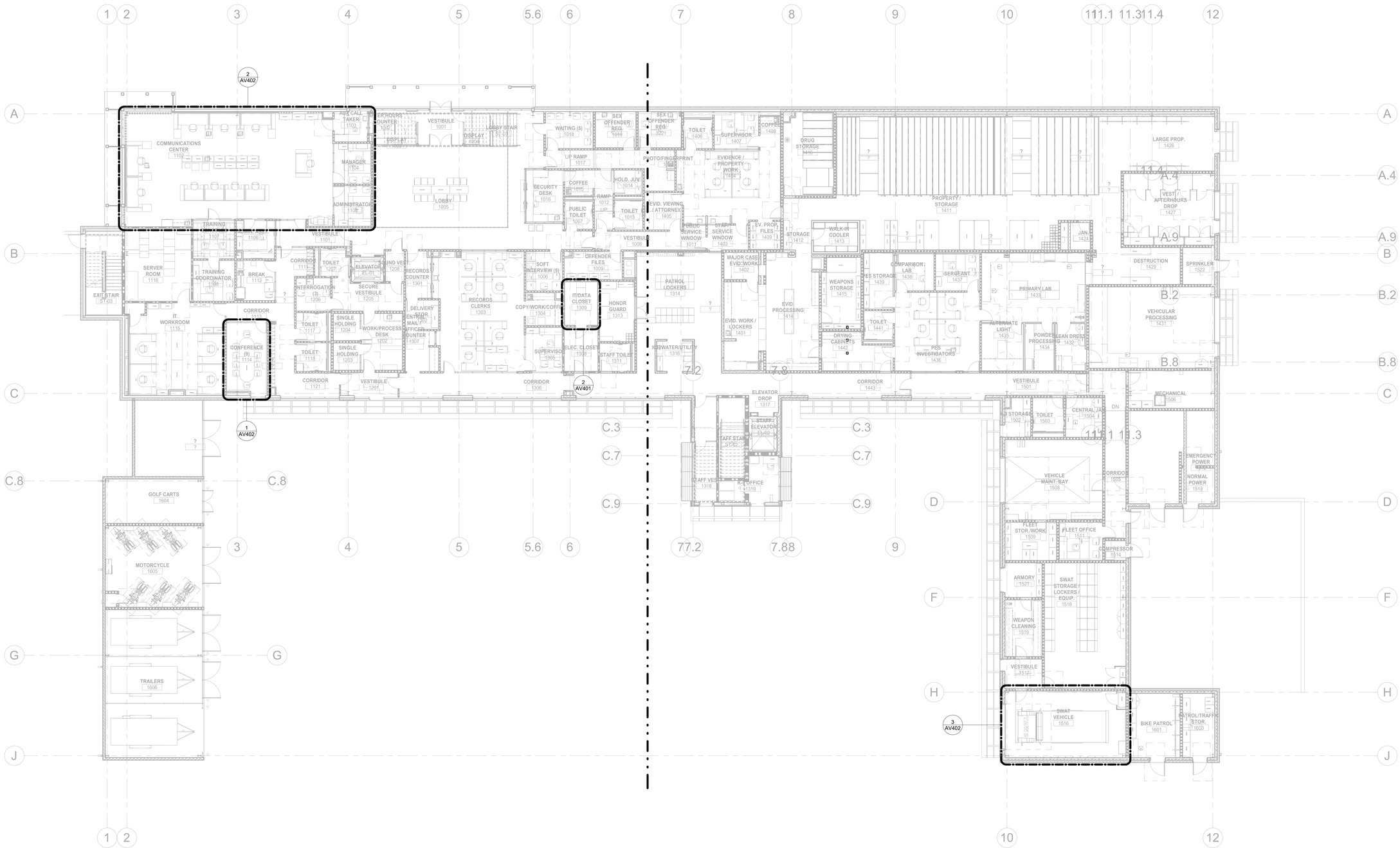

1 LEVEL 1 - OVERALL AUDIO VISUAL PLAN
3/32" = 1'-0"

BRINKLEY SARGENT WIGINTON ARCHITECTS

Architect: Brinkley Sargent Wigginton Architects (972) 960-9970
Landscape: Kendall Landscape Architecture (214) 739-3226
Structural: L.A. Fuess Partners, Inc (214) 593-1118
MEP: M-E Engineers (214) 741-1589
Civil: KSA Engineers, Inc (903) 236-7700
Technology: M-E Engineers (303) 421-6656

LONGVIEW POLICE DEPARTMENT

XXXX SOUTH ST. LONGVIEW, TEXAS 75601

History		
#	Date	Description

STATE OF TEXAS
ANDREW SHIVLEY
109010
LICENSED
PROFESSIONAL ENGINEER
ME Engineers, Inc.
F-10231
08/19/2020

LEVEL 1 - OVERALL AV PLAN

20513
08/19/2020
AV210

BID ISSUE

8/17/2020 2:27:42 PM

C:\Revit Projects\2019\LPD_CENTRAL_19_Steven.Nowak@me-engineers.com.rvt

© 2020 Brinkley Sargent Wigginton Architects, Inc.

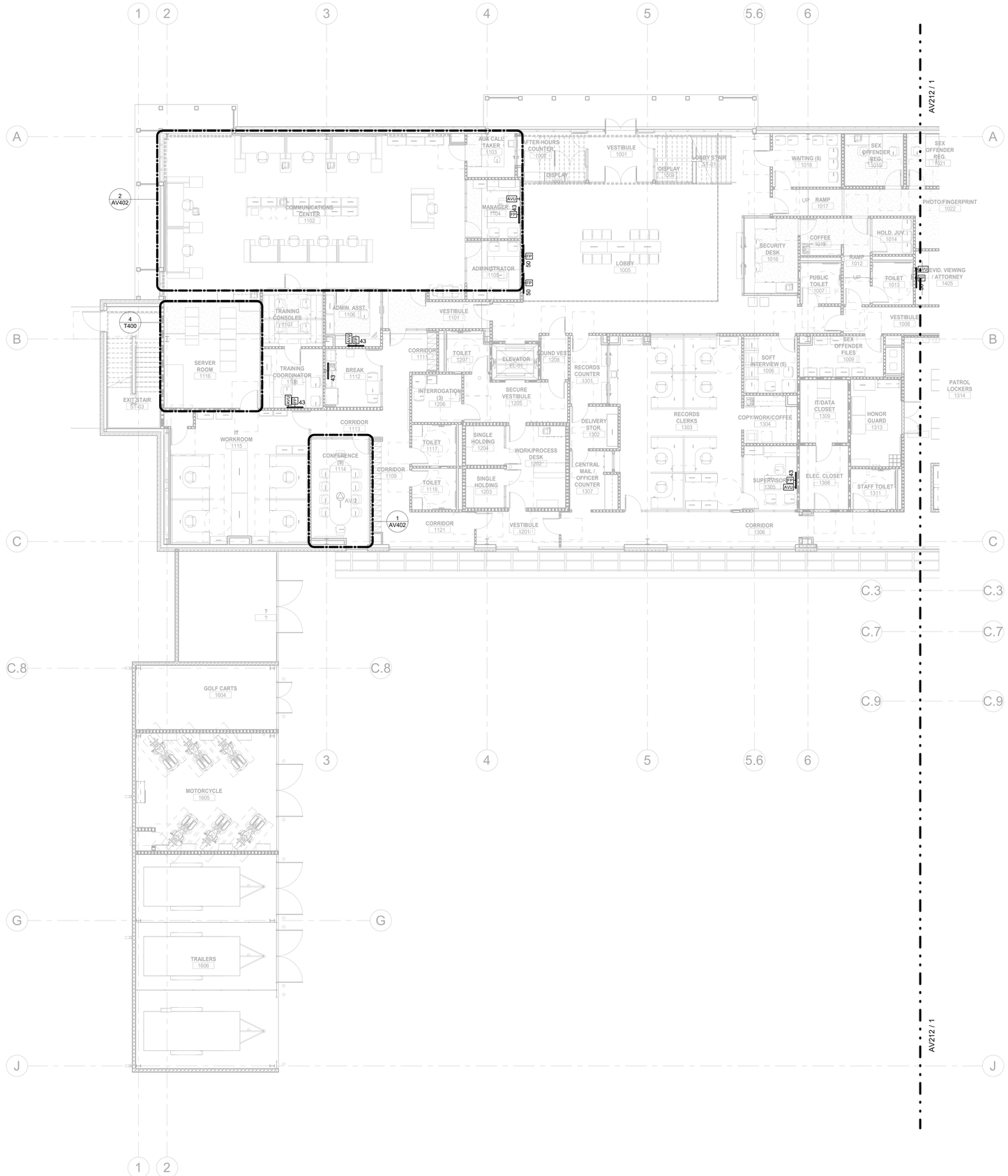

1 LEVEL 1 - AUDIO VISUAL PLAN - WEST
1/8" = 1'-0"

GENERAL NOTES:

1. REFER TO SYMBOL LEGEND FOR ADDITIONAL REQUIREMENTS, INCLUDING BUT NOT LIMITED TO, INSTALLATION OF RACEWAY, CABLING, AND DEVICES.

KEYNOTES

Architect: Brinkley Sargent Wigginton Architects (972) 960-9970
Landscape: Kendall Landscape Architecture (214) 739-3226
Structural: L.A. Fuess Partners, Inc (214) 593-1118
MEP: M-E Engineers (214) 741-1589
Civil: KSA Engineers, Inc (903) 236-7700
Technology: M-E Engineers (303) 421-6656

BRINKLEY SARGENT WIGINTON ARCHITECTS

LONGVIEW POLICE DEPARTMENT

XXXX SOUTH ST. LONGVIEW, TEXAS 75601

History		
#	Date	Description

STATE OF TEXAS
ANDREW SHIVLEY
109010
LICENSED
PROFESSIONAL ENGINEER

ME Engineers, Inc.
F-10231
08/19/2020

LEVEL 1 - AV PLAN - WEST

20513
08/19/2020

AV211

BID ISSUE

C:\Revit Projects\2015\LRL_CENTRAL_F15_Steven.Mowell@me-engineers.com.rvt 8/17/2020 2:27:46 PM

© 2020 Brinkley Sargent Wiginton Architects, Inc.

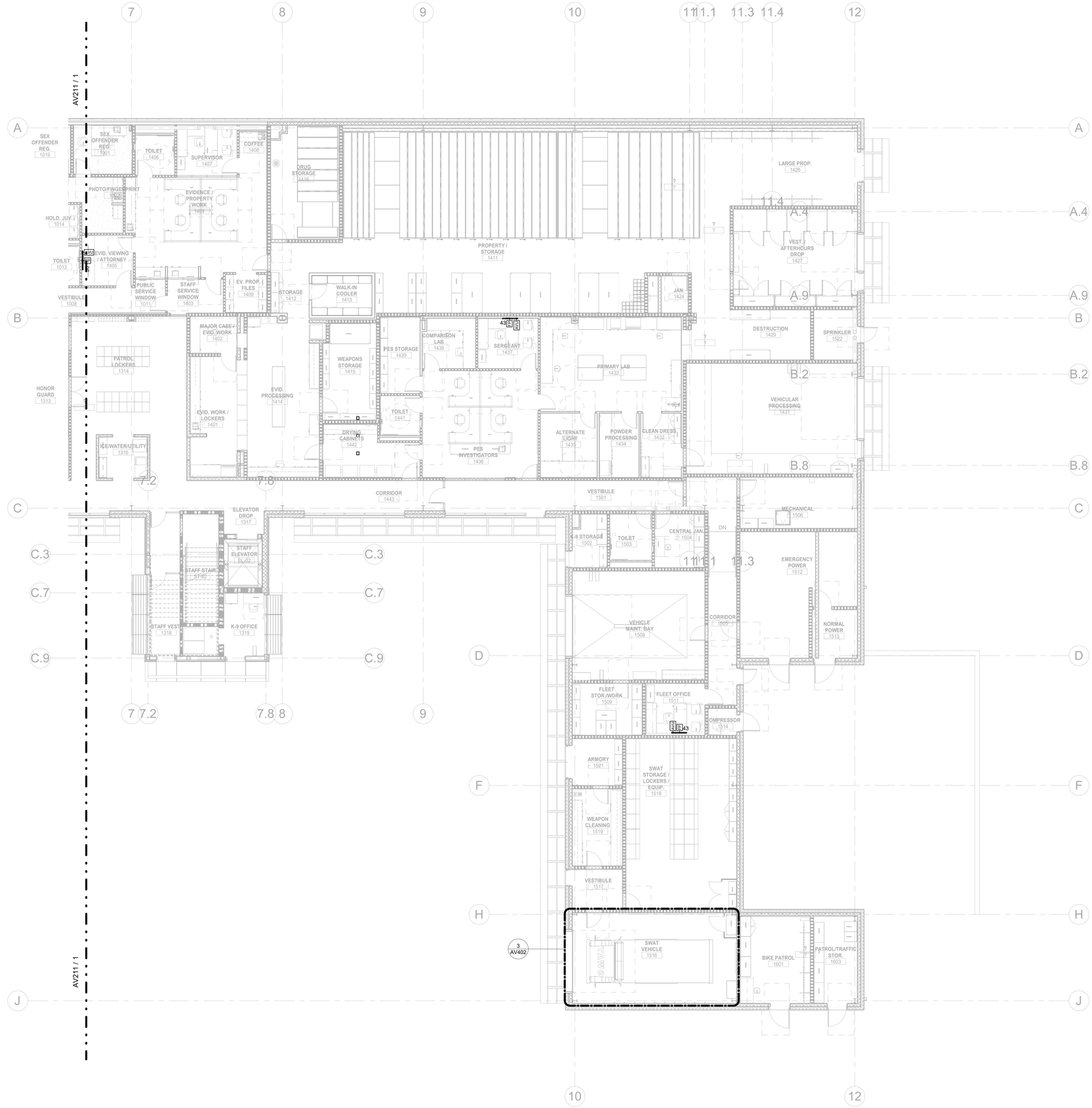

1 LEVEL 1 - AUDIO VISUAL PLAN - EAST
1/8" = 1'-0"

GENERAL NOTES:

1. REFER TO SYMBOL LEGEND FOR ADDITIONAL REQUIREMENTS, INCLUDING BUT NOT LIMITED TO, INSTALLATION OF RACEWAY, CABLING, AND DEVICES.

KEYNOTES

BRINKLEY SARGENT WIGINTON ARCHITECTS

Architect: Brinkley Sargent Wiginton Architects (972) 960-9970
Landscape: Kendall Landscape Architecture (214) 739-3226
Structural: L.A. Fuess Partners, Inc (214) 593-1118
MEP: M-E Engineers (214) 741-1589
Civil: KSA Engineers, Inc (903) 236-7700
Technology: M-E Engineers (303) 421-6656

LONGVIEW POLICE DEPARTMENT

XXXX SOUTH ST. LONGVIEW, TEXAS 75601

History		
#	Date	Description

STATE OF TEXAS
ANDREW SHIVLEY
109010
LICENSED
PROFESSIONAL ENGINEER
ME Engineers, Inc.
F-10231
08/19/2020

LEVEL 1 - AV PLAN - EAST

BID ISSUE

20513
08/19/2020
AV212

8/17/2020 2:27:50 PM

C:\Revit Projects\2018\LPD_CENTRAL_118_Steven.Maxwell@me-engineers.com.rvt

© 2020 Brinkley Sargent Wigginton Architects, Inc.

GENERAL NOTES:

1. REFER TO SYMBOL LEGEND FOR ADDITIONAL REQUIREMENTS, INCLUDING BUT NOT LIMITED TO, INSTALLATION OF RACEWAY, CABLING, AND DEVICES.

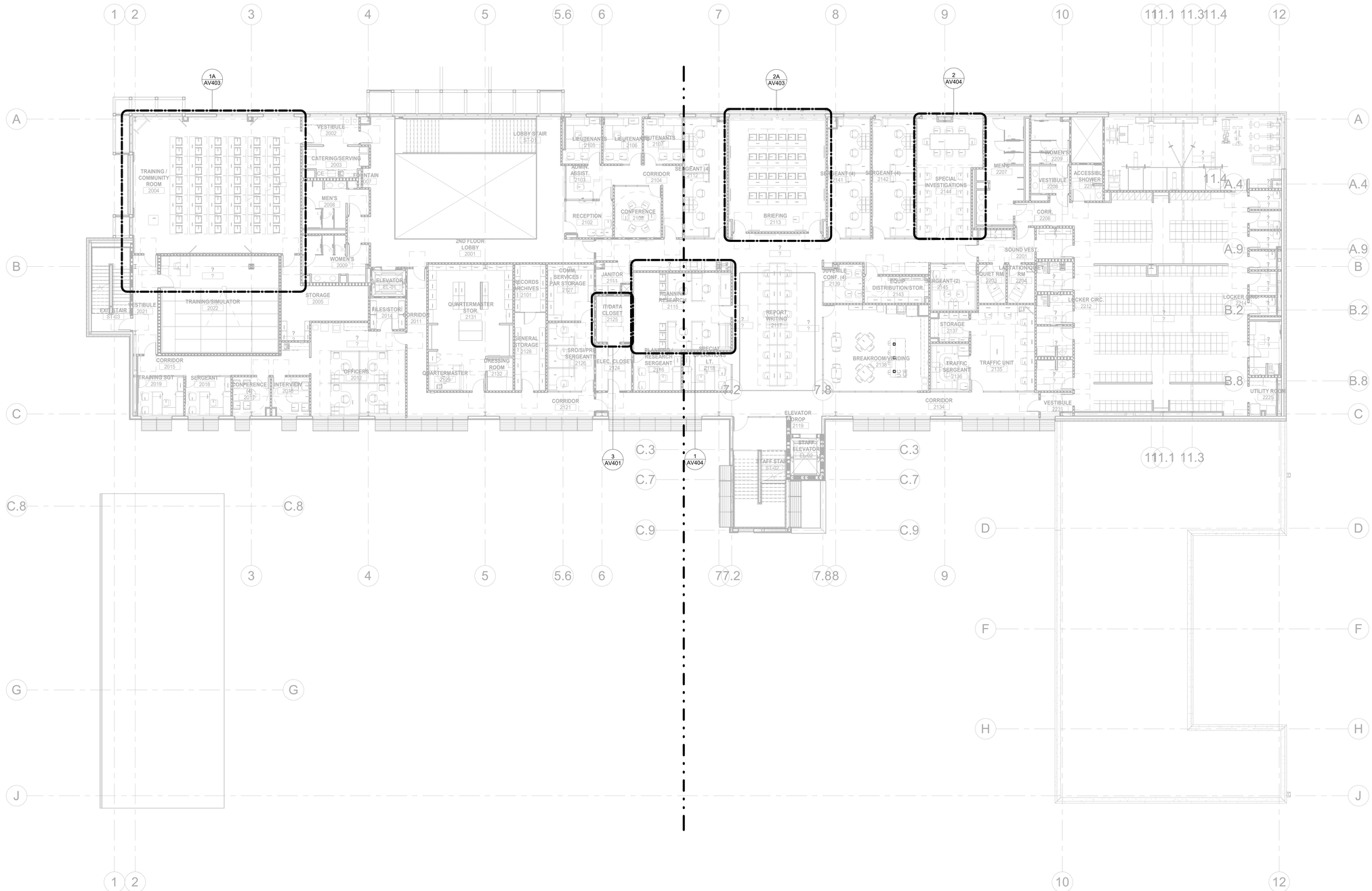

1 LEVEL 2 - OVERALL AUDIO VISUAL PLAN
3/32" = 1'-0"

Architect: Brinkley Sargent Wigginton Architects (972) 960-9970
Landscape: Kendall Landscape Architecture (214) 739-3226
Structural: L.A. Fuess Partners, Inc (214) 593-1118
MEP: M-E Engineers (214) 741-1589
Civil: KSA Engineers, Inc (903) 236-7700
Technology: M-E Engineers (303) 421-6656

BRINKLEY SARGENT WIGINTON ARCHITECTS

LONGVIEW POLICE DEPARTMENT

XXXX SOUTH ST. LONGVIEW, TEXAS 75601

History

#	Date	Description

TEXAS LICENSED PROFESSIONAL ENGINEER
ANDREW SHIVLEY
109010
ME Engineers, Inc.
F-10231
08/19/2020

LEVEL 2 - OVERALL AV PLAN

20513
08/19/2020
AV220

BID ISSUE

5/17/2020 2:27:56 PM

C:\Revit Projects\20513\LPD_CENTRAL_R19_Steven.Mowell@me-engineers.com.rvt

© 2020 Brinkley Sargent Wigginton Architects, Inc.

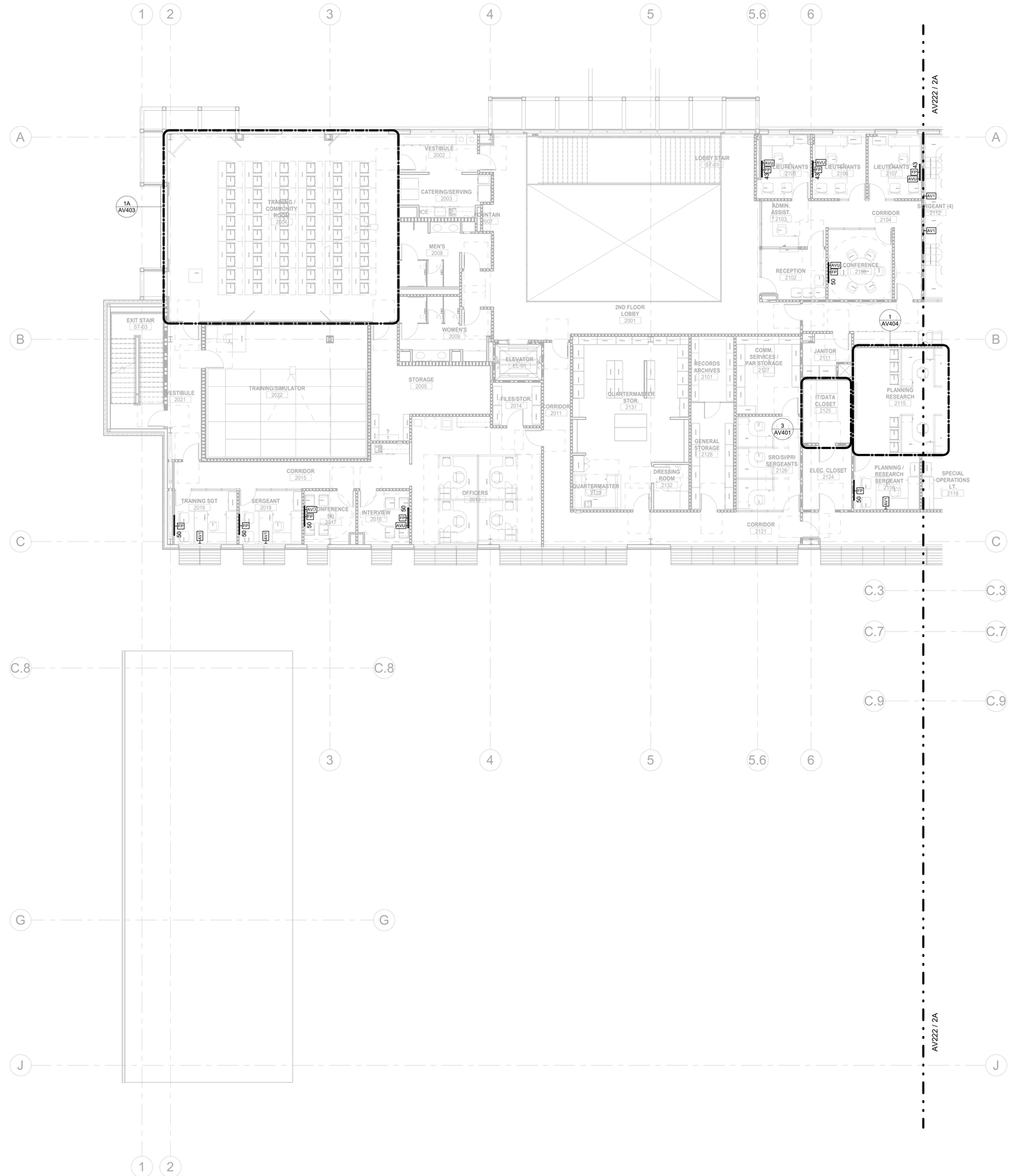

1 LEVEL 2 - AUDIO VISUAL PLAN - WEST
1/8" = 1'-0"

GENERAL NOTES:

1. REFER TO SYMBOL LEGEND FOR ADDITIONAL REQUIREMENTS, INCLUDING BUT NOT LIMITED TO, INSTALLATION OF RACEWAY, CABLING, AND DEVICES.

KEYNOTES

BRINKLEY SARGENT WIGINTON ARCHITECTS

Architect: Brinkley Sargent Wigginton Architects (972) 960-9970
Landscape: Kendall Landscape Architecture (214) 739-3226
Structural: L.A. Fuess Partners, Inc (214) 593-1118
MEP: M-E Engineers (214) 741-1589
Civil: KSA Engineers, Inc (903) 236-7700
Technology: M-E Engineers (303) 421-6656

LONGVIEW POLICE DEPARTMENT

XXXX SOUTH ST. LONGVIEW, TEXAS 75601

History		
#	Date	Description

ANDREW SHIVLEY
109010
LICENSED
PROFESSIONAL ENGINEER
STATE OF TEXAS
ME Engineers, Inc.
F-10231
08/19/2020

LEVEL 2 - AV PLAN - WEST

BID ISSUE

20513
08/19/2020
AV221

C:\Revit Projects\2015\URL_CENTRAL_FILE_Steven.Mowell@me-engineers.com.rvt 8/17/2020 2:27:59 PM

© 2020 Brinkley Sargent Wigginton Architects, Inc.

GENERAL NOTES:

1. REFER TO SYMBOL LEGEND FOR ADDITIONAL REQUIREMENTS, INCLUDING BUT NOT LIMITED TO, INSTALLATION OF RACEWAY, CABLING, AND DEVICES.

KEYNOTES

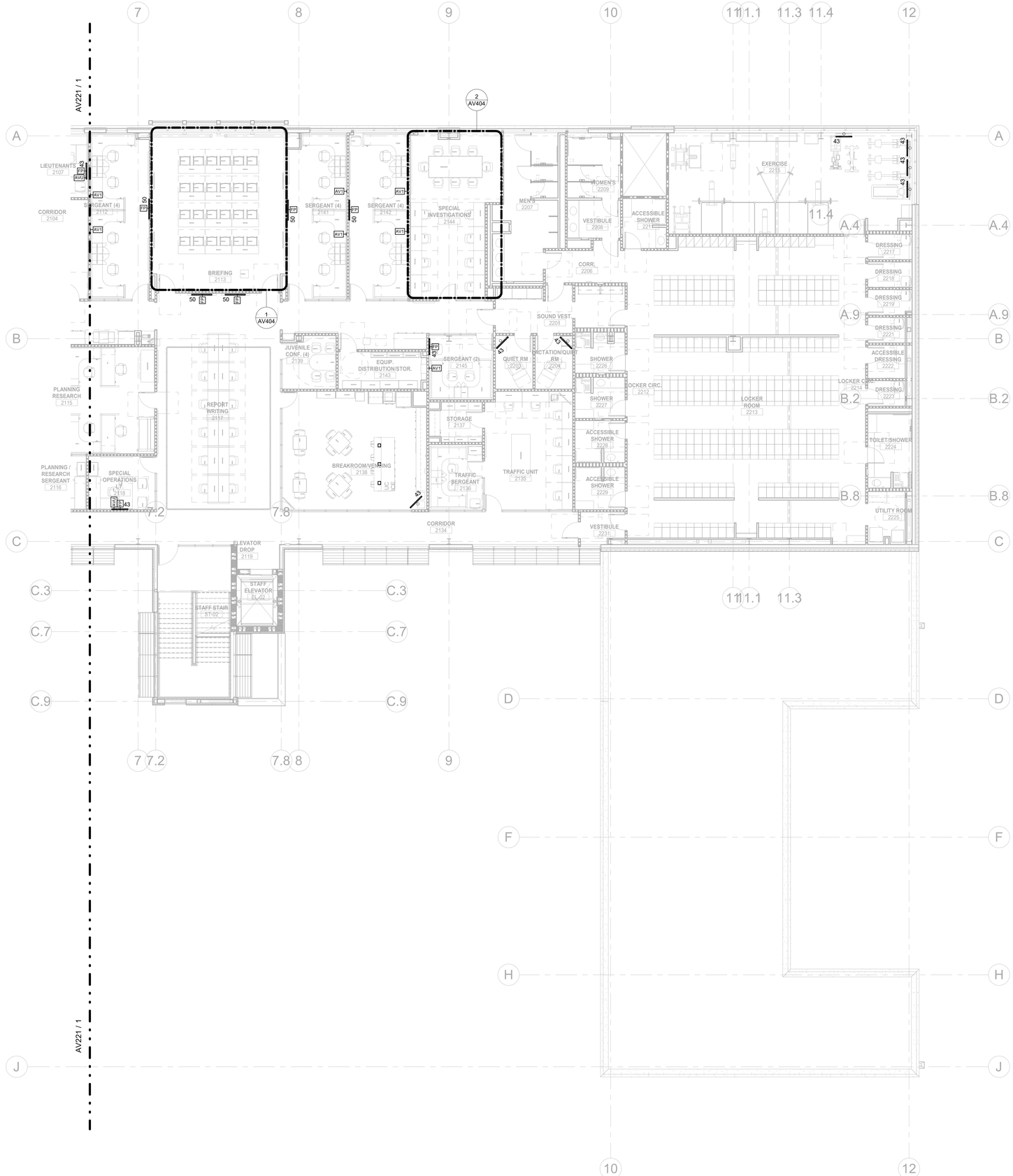

2A LEVEL 2 - AUDIO VISUAL PLAN - EAST
1/8" = 1'-0"

Architect: Brinkley Sargent Wigginton Architects (972) 960-9970
Landscape: Kendall Landscape Architecture (214) 739-3226
Structural: L.A. Fuess Partners, Inc (214) 593-1118
MEP: M-E Engineers (214) 741-1589
Civil: KSA Engineers, Inc (903) 236-7700
Technology: M-E Engineers (303) 421-6656

BRINKLEY SARGENT WIGINTON ARCHITECTS

LONGVIEW POLICE DEPARTMENT

XXXX SOUTH ST. LONGVIEW, TEXAS 75601

History		
#	Date	Description

STATE OF TEXAS
ANDREW SHIVLEY
109010
LICENSED
PROFESSIONAL ENGINEER
ME Engineers, Inc.
F-10231
08/19/2020

LEVEL 2 - AV PLAN - EAST

BID ISSUE

20513
08/19/2020
AV222

8/17/2020 2:28:03 PM

C:\Revit Projects\20513\LPD_CENTRAL_119_Steven.Moxwell@me-engineers.com.rvt

© 2020 Brinkley Sargent Wigginton Architects, Inc.

GENERAL NOTES:

1. REFER TO SYMBOL LEGEND FOR ADDITIONAL REQUIREMENTS, INCLUDING BUT NOT LIMITED TO, INSTALLATION OF RACEWAY, CABLING, AND DEVICES.

1 LEVEL 3 - OVERALL AUDIO VISUAL PLAN
3/32" = 1'-0"

BRINKLEY SARGENT WIGINTON ARCHITECTS

Architect: Brinkley Sargent Wigginton Architects (972) 960-9970
Landscape: Kendall Landscape Architecture (214) 739-3226
Structural: L.A. Fuess Partners, Inc (214) 593-1118
MEP: M-E Engineers (214) 741-1589
Civil: KSA Engineers, Inc (903) 236-7700
Technology: M-E Engineers (303) 421-6656

LONGVIEW POLICE DEPARTMENT

XXXX SOUTH ST. LONGVIEW, TEXAS 75601

History

#	Date	Description

STATE OF TEXAS
ANDREW SHIVLEY
109010
LICENSED
PROFESSIONAL ENGINEER
ME Engineers, Inc.
F-10231
08/19/2020

LEVEL 3 - OVERALL AV PLAN

20513
08/19/2020
AV230

BID ISSUE

8/17/2020 2:28:08 PM

C:\Revit Projects\2019\LPD_CENTRAL_19_Steven.Noreen@me-engineers.com.rvt

© 2020 Brinkley Sargent Wigginton Architects, Inc.

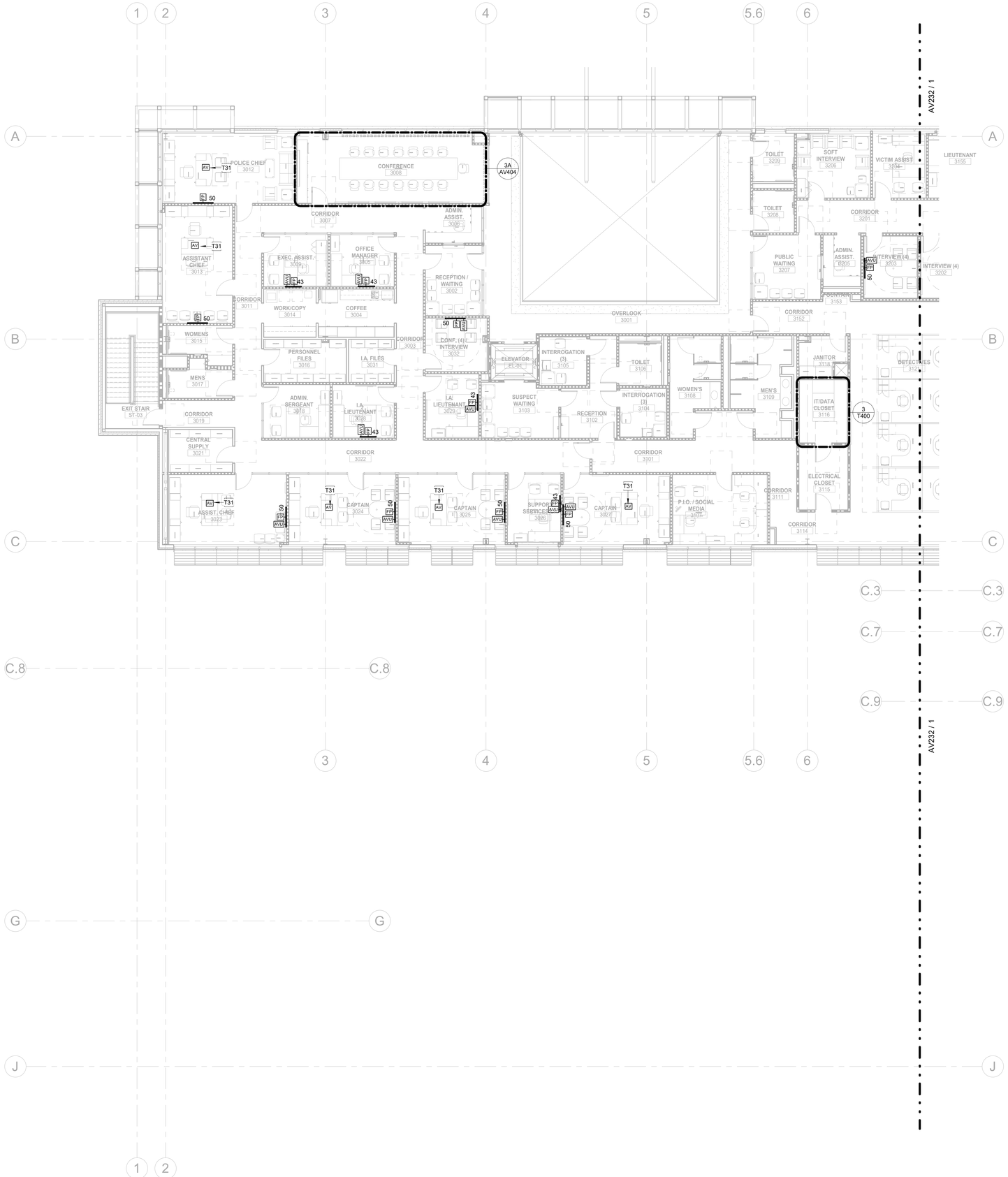

1 LEVEL 3 - AUDIO VISUAL PLAN - WEST
1/8" = 1'-0"

GENERAL NOTES:

1. REFER TO SYMBOL LEGEND FOR ADDITIONAL REQUIREMENTS, INCLUDING BUT NOT LIMITED TO, INSTALLATION OF RACEWAY, CABLING, AND DEVICES.

KEYNOTES	
T31	PROVIDE HDBT EXTENDER SET FOR HDMI TO DISPLAY. TRANSMITTER MOUNT AT TABLE. PROVIDE PASS THROUGH CABLES. COORDINATE WITH FURNITURE.

Architect: Brinkley Sargent Wigginton Architects (972) 960-9970
Landscape: Kendall Landscape Architecture (214) 739-3226
Structural: L.A. Fuess Partners, Inc (214) 593-1118
MEP: M-E Engineers (214) 741-1589
Civil: KSA Engineers, Inc (903) 236-7700
Technology: M-E Engineers (303) 421-6656

BRINKLEY SARGENT WIGINTON ARCHITECTS

LONGVIEW POLICE DEPARTMENT

XXXX SOUTH ST. LONGVIEW, TEXAS 75601

History		
#	Date	Description

STATE OF TEXAS
ANDREW SHIVLEY
109010
LICENSED
PROFESSIONAL ENGINEER
ME Engineers, Inc.
F-10231
08/19/2020

LEVEL 3 - AV PLAN - WEST

20513
08/19/2020
AV231

BID ISSUE

C:\Revit Projects\2015\LPD_CENTRAL_R15_Steven.Mowell@me-engineers.com.rvt 8/17/2020 2:28:12 PM

© 2020 Brinkley Sargent Wigginton Architects, Inc.

GENERAL NOTES:

1. REFER TO SYMBOL LEGEND FOR ADDITIONAL REQUIREMENTS, INCLUDING BUT NOT LIMITED TO, INSTALLATION OF RACEWAY, CABLING, AND DEVICES.

KEYNOTES

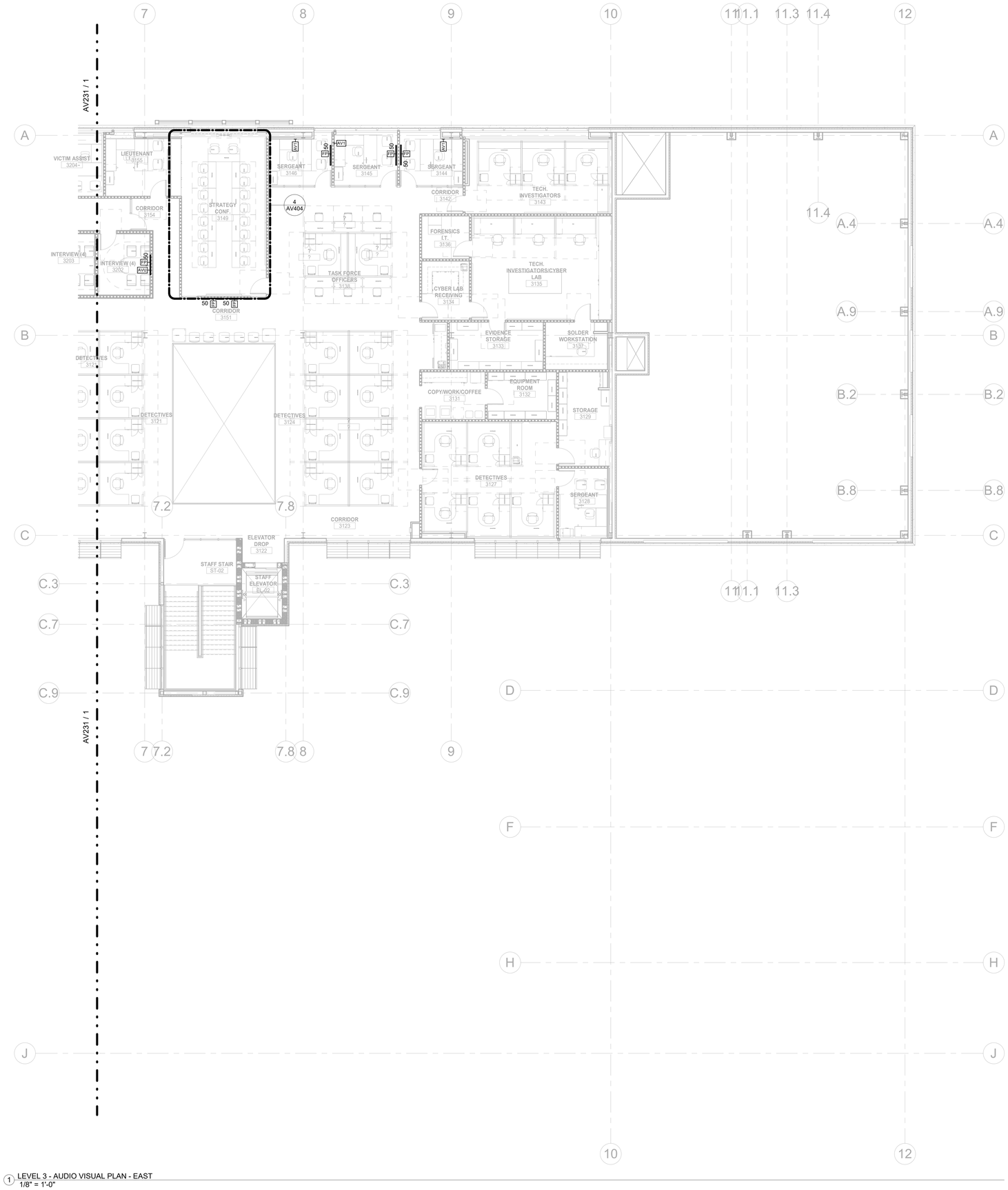

1 LEVEL 3 - AUDIO VISUAL PLAN - EAST
1/8" = 1'-0"

BRINKLEY SARGENT WIGINTON ARCHITECTS

Architect: Brinkley Sargent Wigginton Architects (972) 960-9970
Landscape: Kendall Landscape Architecture (214) 739-3226
Structural: L.A. Fuess Partners, Inc (214) 593-1118
MEP: M-E Engineers (214) 741-1589
Civil: KSA Engineers, Inc (903) 236-7700
Technology: M-E Engineers (303) 421-6656

LONGVIEW POLICE DEPARTMENT

XXXX SOUTH ST. LONGVIEW, TEXAS 75601

History		
#	Date	Description

STATE OF TEXAS
ANDREW SHIVLEY
109010
LICENSED
PROFESSIONAL ENGINEER
ME Engineers, Inc.
F-10231
08/19/2020

LEVEL 3 - AV PLAN - EAST

BID ISSUE

20513
08/19/2020
AV232

C:\Revit Projects\2019\URL_CENTRAL_T1_Steven.Maxwell@me-engineers.com.rvt
8/17/2020 2:28:15 PM

© 2020 Brinkley Sargent Wigginton Architects, Inc.

GENERAL NOTES:

1. REFER TO SYMBOL LEGEND FOR ADDITIONAL REQUIREMENTS, INCLUDING BUT NOT LIMITED TO, INSTALLATION OF RACEWAY, CABLING, AND DEVICES.

KEYNOTES

38	POWER DIST
37	BLANK VENT
36	
35	AV NETWORK SWITCH
34	
33	CP3 CONTROL SYSTEM
32	RESERVED FOR FUTURE AV
31	
30	
29	
28	
27	
26	
25	
24	
23	
22	
21	
20	
19	
18	
17	
16	
15	
14	
13	
12	
11	
10	
9	
8	
7	
6	
5	
4	
3	
2	
1	

R.3
AV
IT 2125

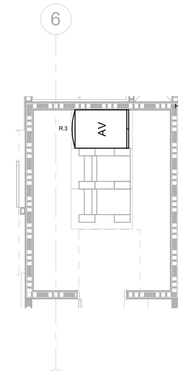

3 IT/DATA CLOSET 2125
1/4" = 1'-0"

38	POWER DIST
37	BLANK VENT
36	AV NETWORK SWITCH
35	RESERVED FOR FUTURE AV
34	
33	
32	
31	
30	
29	
28	
27	
26	
25	
24	
23	
22	
21	
20	
19	
18	
17	
16	
15	
14	
13	
12	
11	
10	
9	
8	
7	
6	
5	
4	
3	
2	
1	

R.2
AV
IT 1309

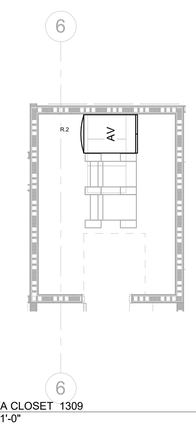

2 IT/DATA CLOSET 1309
1/4" = 1'-0"

BRINKLEY SARGENT WIGINTON ARCHITECTS

Architect: Brinkley Sargent Wigginton Architects (972) 960-9970
Landscape: Kendall Landscape Architecture (214) 739-3226
Structural: L.A. Fuess Partners, Inc (214) 593-1118
MEP: M-E Engineers (214) 741-1589
Civil: KSA Engineers, Inc (903) 236-7700
Technology: M-E Engineers (303) 421-6656

LONGVIEW POLICE DEPARTMENT

XXXX SOUTH ST. LONGVIEW, TEXAS 75601

History		
#	Date	Description

STATE OF TEXAS
ANDREW SHIVLEY
109010
LICENSED
PROFESSIONAL ENGINEER
ME Engineers, Inc.
F-10231
08/19/2020

AV ENLARGED PLAN

BID ISSUE

20513
08/19/2020
AV401

8/17/2020 2:28:18 PM

C:\Revit Projects\2019\LPD_CENTRAL_119_Steven.Maxwell@me-engineers.com.rvt

© 2020 Brinkley Sargent Wigginton Architects, Inc.

GENERAL NOTES:

1. REFER TO SYMBOL LEGEND FOR ADDITIONAL REQUIREMENTS, INCLUDING BUT NOT LIMITED TO, INSTALLATION OF RACEWAY, CABLING, AND DEVICES.

KEYNOTES	
T5	AV TRANSMITTER. MOUNT TO UNDERSIDE OF DESK. PROVIDE HDMI CABLE TO PC WORKSTATION. SEE AV ONE-LINES
T16	PROVIDE TABLE TOP AV BOX FOR AV AND DATA CABLES. PASS- THROUGH CABLES SEE AV ONE-LINE FOR DETAILS. COORDINATE INSTALLATION WITH FURNITURE VENDOR PRIOR TO ORDERING BOX.
T17	PROVIDE CUSTOM FABRIC OR VINYL COVER FOR PROJECTOR TO PROTECT FROM DUST AND DIRT IN THE VEHICLE BAY WHEN NOT IN USE. COORDINATE WITH OWNER IT DEPARTMENT AND AV ENGINEER ON PROPOSED SOLUTION/PRODUCT.
T19	CAD DISPLAY. SOURCE WORKSTATION HDMI EXTENDER TX AND RX.
T20	OFE CABLE BOX/RECEIVER AT THIS DISPLAY.
T21	SECURITY FEED FROM OFE PC AT DISPLAY.
T22	911 DISPLAY. OFE PC AT DISPLAY.

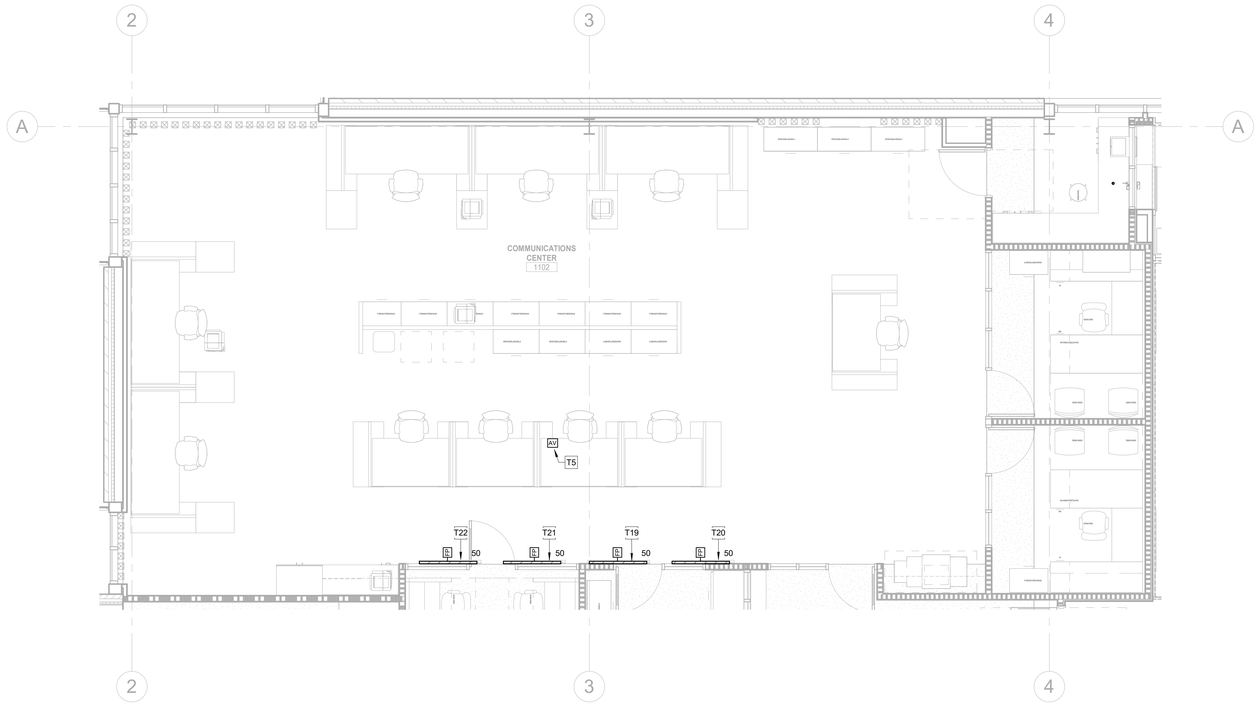

2 AV ENLARGED ROOMS - COMMUNICATIONS CENTER 1102
1/4" = 1'-0"

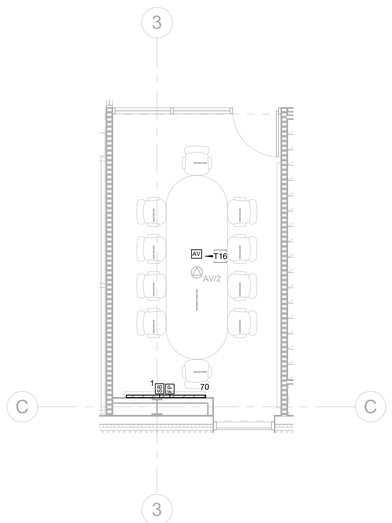

1 AV ENLARGED ROOM - CONFERENCE (9) 1114
1/4" = 1'-0"

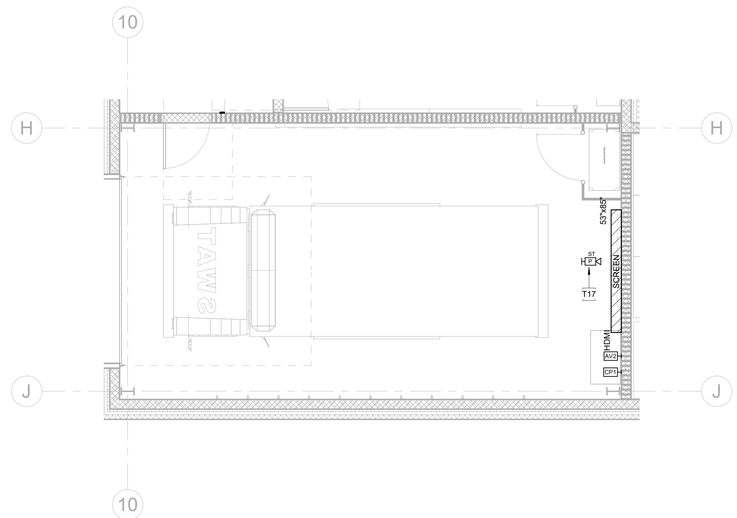

3 AV ENLARGED ROOM - SWAT VEHICLE 1516
1/4" = 1'-0"

Architect: Brinkley Sargent Wigginton Architects (972) 960-9970
Landscape: Kendall Landscape Architecture (214) 739-3226
Structural: L.A. Fuess Partners, Inc (214) 593-1118
MEP: M-E Engineers (214) 741-1589
Civil: KSA Engineers, Inc (903) 236-7700
Technology: M-E Engineers (303) 421-6656

BRINKLEY SARGENT WIGINTON ARCHITECTS

LONGVIEW POLICE DEPARTMENT

XXXX SOUTH ST. LONGVIEW, TEXAS 75601

History		
#	Date	Description

STATE OF TEXAS
ANDREW SHIVLEY
109010
LICENSED
PROFESSIONAL ENGINEER

ME Engineers, Inc.
F-10231
08/19/2020

AV ENLARGED PLAN

20513
08/19/2020

AV402

BID ISSUE

6/17/2020 2:28:31 PM
C:\Revit Projects\2015\UPL_CENTRAL_R15_Steven.Maxwell@me-engineers.com.rvt

© 2020 Brinkley Sargent Wigginton Architects, Inc.

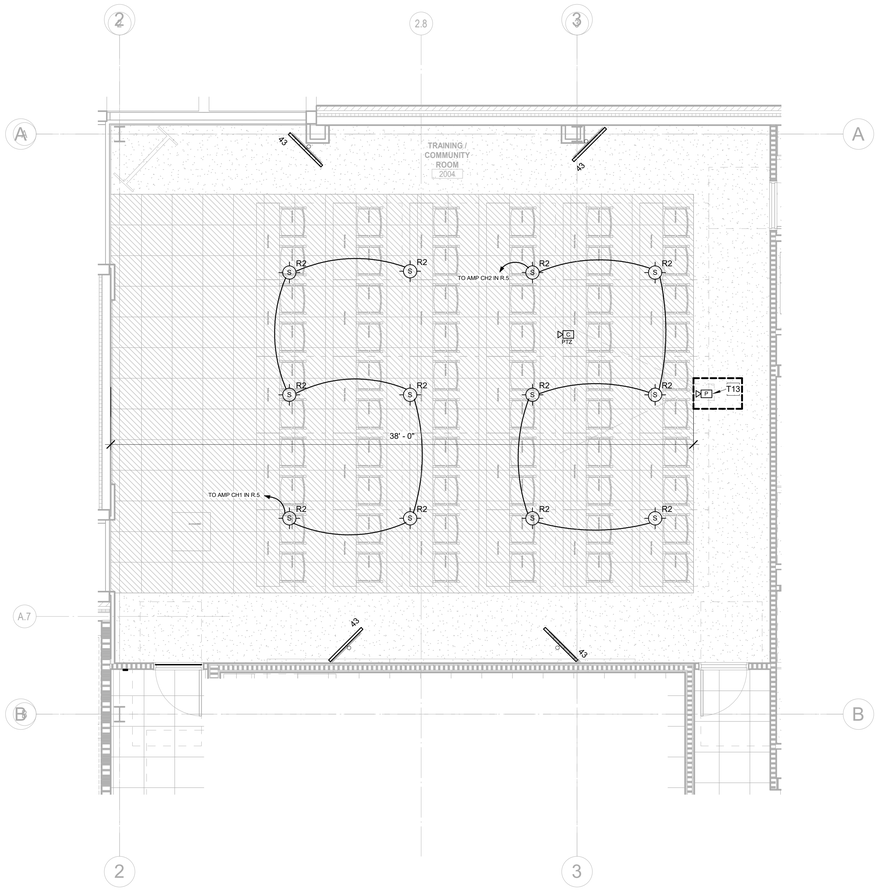

1B AV ENLARGED RCP - TRAINING/COMMUNITY ROOM 2004
1/4" = 1'-0"

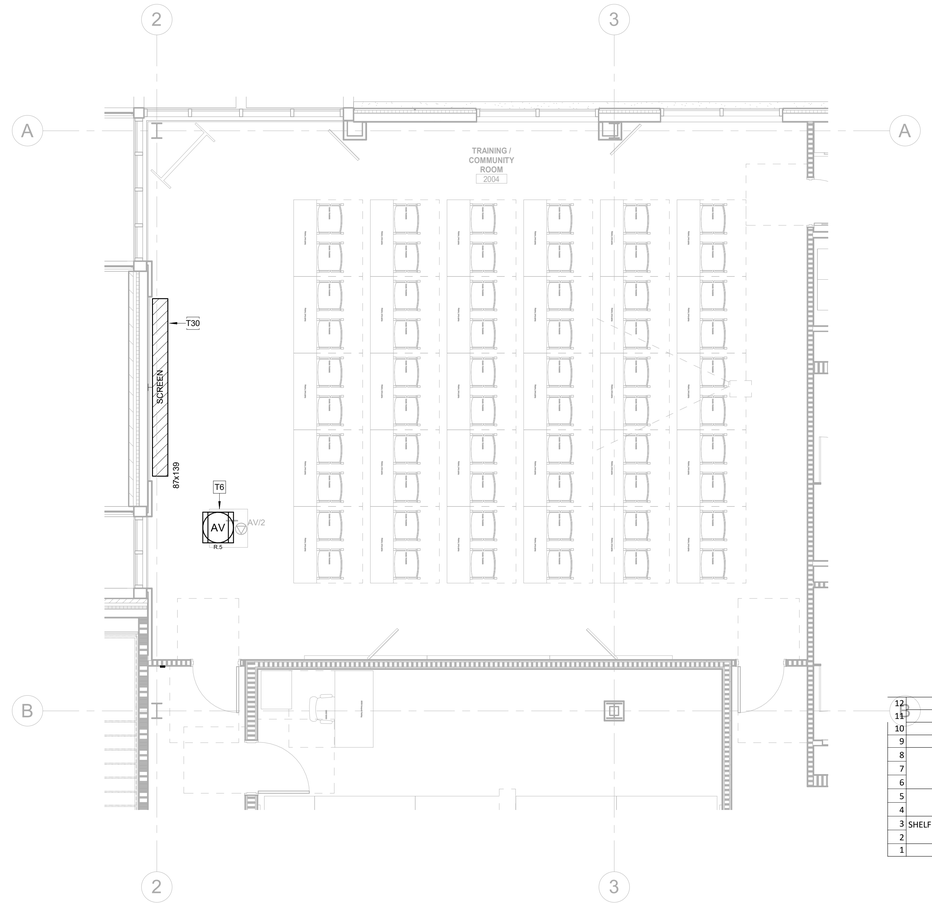

1A AV ENLARGED ROOM - TRAINING/COMMUNITY ROOM 2004
1/4" = 1'-0"

GENERAL NOTES:

1. REFER TO SYMBOL LEGEND FOR ADDITIONAL REQUIREMENTS, INCLUDING BUT NOT LIMITED TO, INSTALLATION OF RACEWAY, CABLING, AND DEVICES.

KEYNOTES	
T6	EQUIPMENT RACK IN LECTERN. AV CONTRACTOR TO PROVIDE LECTERN AND RACK WITH ACCESSORIES AS SPECIFIED. COORDINATE WITH OWNER, AV ENGINEER AND ARCHITECT.
T13	PROJECTOR MOUNTED IN OVERSIZED SOFFIT POCKET. POCKET DIMENSIONS ARE 24"W x 12"H x 26"D. COORDINATE WITH GENERAL CONTRACTOR AND AV ENGINEER ON FINAL DIMENSIONS AND PRODUCT ENVIRONMENTAL REQUIREMENTS. BACK OF POCKET WILL BE OPEN TO PLENUM ABOVE FOR EXHAUST VENTING.
T30	FIXED SURFACE MOUNT SCREEN. COORDINATE WITH ARCHITECTURE AND AV ENGINNER ON EXACT MOUNTING LOCATION AND MOUNTING HEIGHT. PROVIDE PROJECTION ALIGNMENT CALCULATIONS IN SUBMITTAL SHOP DRAWINGS BASED ON LENS AND THROW DISTANCE.

12	POWER DIST
11	ALS
10	WIRELESS MICROPHONE
9	VENT
8	SWITCHER
7	
6	
5	LECTURE CAPTURE
4	
3	SHELF FOR COMPONENTS (SWITCH, DA, TXS ECT)
2	
1	AMPLIFIER

R.5
AV LECTERN
TRAINING ROOM

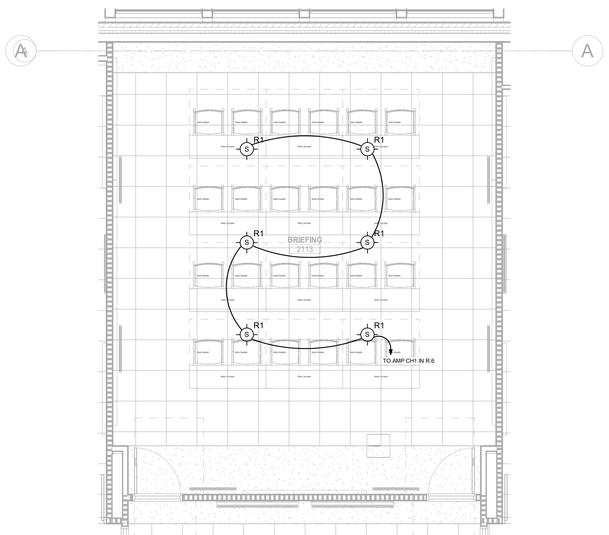

2B AV ENLARGED RCP - BRIEFING 2113
1/4" = 1'-0"

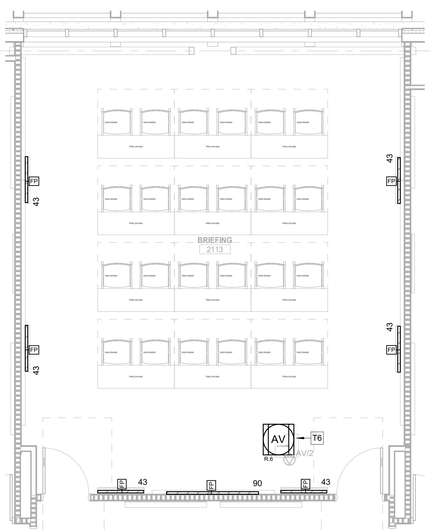

2A AV ENLARGED ROOM - BRIEFING 2113
1/4" = 1'-0"

12	POWER DIST
11	AMPLIFIER
10	VENT
9	SWITCHER
8	
7	
6	BLANK
5	SHELF FOR COMPONENTS (SWITCH, DA, TXS ECT)
4	
3	BLANK
2	
1	

R.6
AV LECTERN
BRIEFING ROOM

BRINKLEY SARGENT WIGINTON ARCHITECTS

Architect: Brinkley Sargent Wigginton Architects (972) 960-9970
Landscape: Kendall Landscape Architecture (214) 739-3226
Structural: L.A. Fuess Partners, Inc (214) 593-1118
MEP: M-E Engineers (214) 741-1589
Civil: KSA Engineers, Inc (903) 236-7700
Technology: M-E Engineers (303) 421-6656

LONGVIEW POLICE DEPARTMENT

XXXX SOUTH ST. LONGVIEW, TEXAS 75601

History		
#	Date	Description

TEXAS REGISTERED ANDREW SHIVLEY 109010 LICENSED PROFESSIONAL ENGINEER
ME Engineers, Inc.
F-10231
08/19/2020

AV ENLARGED PLAN

BID ISSUE

20513
08/19/2020
AV403

C:\Revit Projects\2015\URL_CENTRAL_FILE_Steven.Mowell@me-engineers.com.rvt 8/17/2020 2:28:28 PM

© 2020 Brinkley Sargent Wigginton Architects, Inc.

15	POWER DIST
14	BLANK
13	DIGITAL SIGNAL PROCESSOR
12	TUNER
11	BLANK
10	
9	SHELF FOR BARCO
8	SWITCHER
7	
6	
5	BLANK
4	
3	SHELF FOR COMPONENTS (SWITCH, DA, TXS ECT)
2	
1	AMPLIFIER

R.7
SLIDE OUT RACK - CREDENZA/MILLWORK
CONFERENCE ROOM 3008

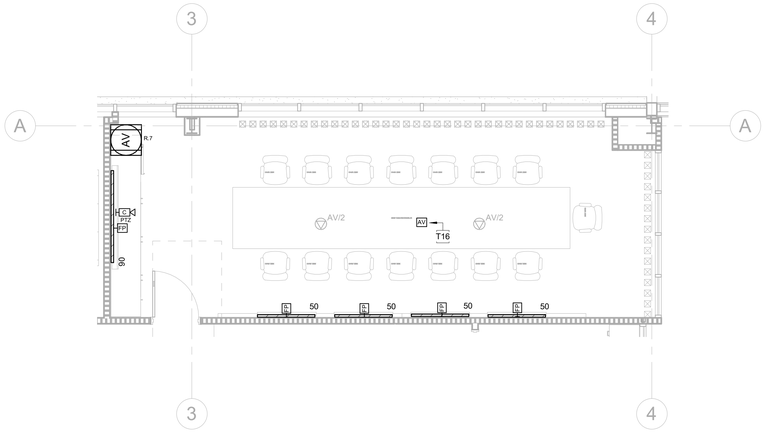

3A AV ENLARGED ROOM - CONFERENCE (14) 3008
1/4" = 1'-0"

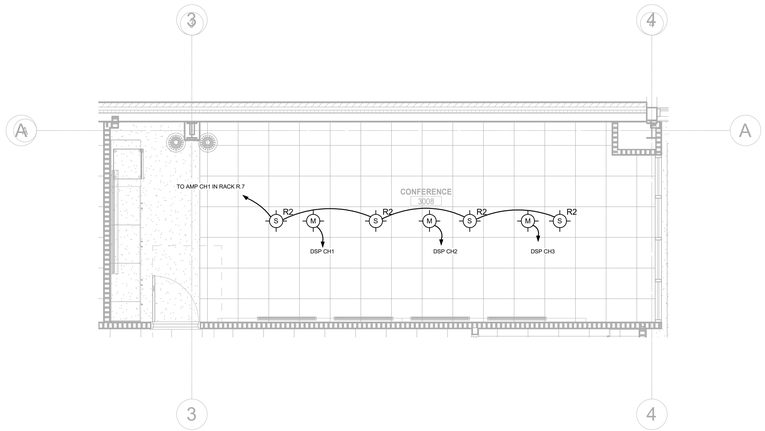

3B AV ENLARGED RCP - CONFERENCE (14) 3008
1/4" = 1'-0"

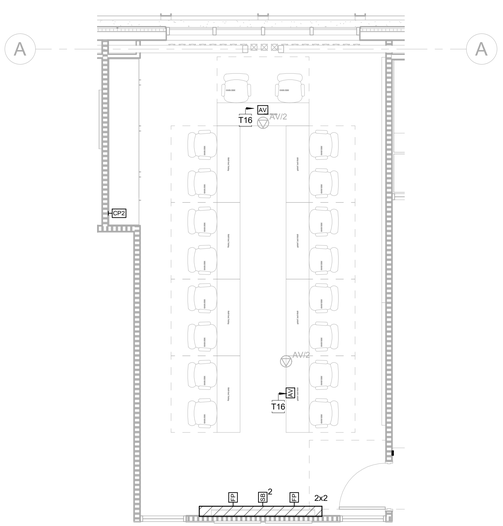

4 AV ENLARGED ROOM - EVIDENCE/STRATEGY CONF. 3149
1/4" = 1'-0"

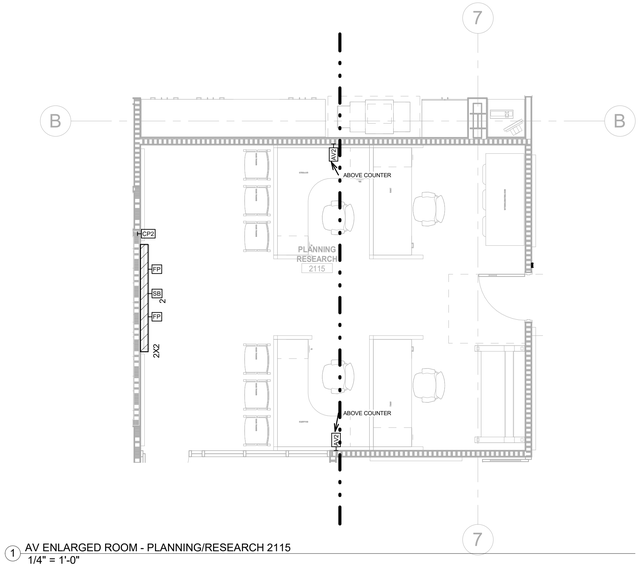

1 AV ENLARGED ROOM - PLANNING/RESEARCH 2115
1/4" = 1'-0"

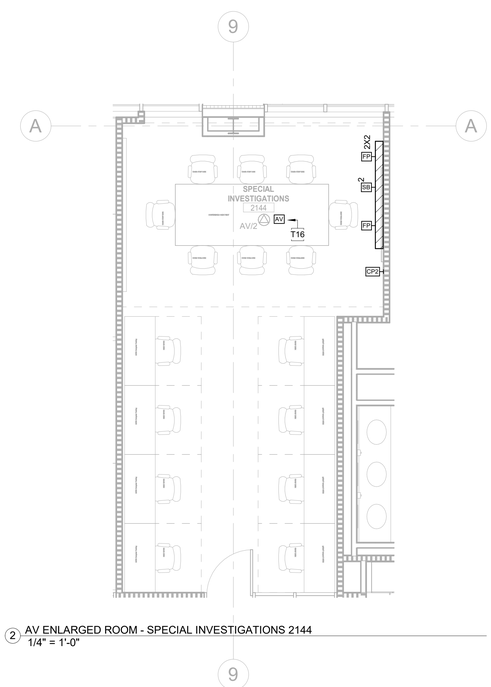

2 AV ENLARGED ROOM - SPECIAL INVESTIGATIONS 2144
1/4" = 1'-0"

GENERAL NOTES:

1. REFER TO SYMBOL LEGEND FOR ADDITIONAL REQUIREMENTS, INCLUDING BUT NOT LIMITED TO, INSTALLATION OF RACEWAY, CABLING, AND DEVICES.

KEYNOTES	
T16	PROVIDE TABLE TOP AV BOX FOR AV AND DATA CABLES. PASS- THROUGH CABLES SEE AV ONE-LINE FOR DETAILS. COORDINATE INSTALLATION WITH FURNITURE VENDOR PRIOR TO ORDERING BOX.

BRINKLEY SARGENT WIGINTON ARCHITECTS

Architect: Brinkley Sargent Wigginton Architects (972) 960-9970
Landscape: Kendall Landscape Architecture (214) 739-3226
Structural: L.A. Fuess Partners, Inc (214) 593-1118
MEP: M-E Engineers (214) 741-1589
Civil: KSA Engineers, Inc (903) 236-7700
Technology: M-E Engineers (303) 421-6656

LONGVIEW POLICE DEPARTMENT

XXXX SOUTH ST. LONGVIEW, TEXAS 75601

History		
#	Date	Description

STATE OF TEXAS
ANDREW SHIVLEY
109010
LICENSED
PROFESSIONAL ENGINEER

ME Engineers, Inc.
F-10231
08/19/2020

AV ENLARGED PLAN

20513
08/19/2020
AV404

BID ISSUE

C:\Revit Projects\2015\URL_CENTRAL_FILE_Steven.Mowell@me-engineers.com.rvt 8/17/2020 2:28:33 PM

© 2020 Brinkley Sargent Wiginton Architects, Inc.

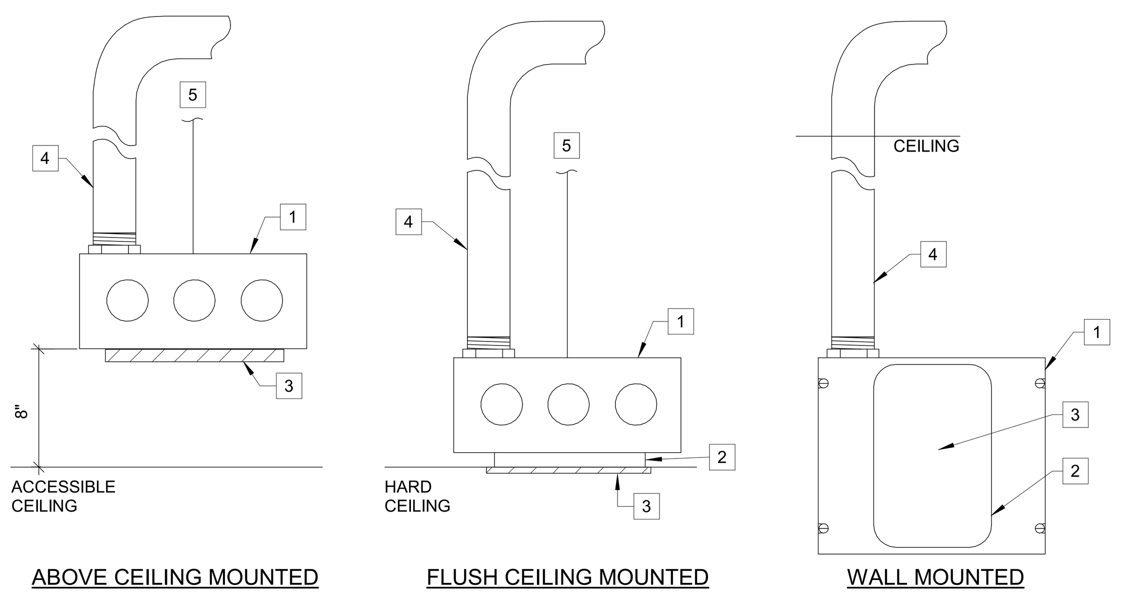

GENERAL NOTES:

1. REFER TO SYSTEM SYMBOL LEGEND - PATHWAY REQUIREMENT NOTES TO CONFIRM IF CONDUIT STUBS TO CEILING AND USE OF J-HOOKS IS ALLOWED OR IF CONTINUOUS CONDUIT IS REQUIRED FOR ALL LOCATIONS. PARTICULAR ATTENTION SHALL BE GIVEN TO CONDUIT ROUTING NOTES AS EACH SYSTEM (AV, COMM, SECURITY, ETC.) HAS SPECIFIC CONDUIT ROUTING REQUIREMENTS.
2. INTENT OF THIS DETAIL IS TO DEPICT AV RACEWAY AND CABLING REQUIREMENTS.
3. DATA TERMINATION MAY RESIDE WITHIN BACK BOX. REFER TO COMM DRAWINGS AND DETAIL C.03 FOR ADDITIONAL INFORMATION.

KEYNOTES: #

1. BACK-BOX: PROVIDE 4-11/16" X 4-11/16 "X 3-1/4" (HUBBEL 260) FLUSH MOUNTED BOX.
2. MUD-RING: PROVIDE 1-GANG MUD RING FOR MOUNTING OF DEVICE / FACEPLATE. MUD RING SHALL BE SEPARATE COMPONENT FROM BACK-BOX.
3. FACE PLATE: REQUIREMENTS VARY, REFER TO SPECIFIC DEVICE DETAILS AND AV ONE-LINES FOR ADDITIONAL REQUIREMENTS.
4. CONDUIT: PROVIDE (1) 1-1/4 INCH CONDUIT.
5. SUPPORT: PROVIDE THREADED ROD ATTACHED TO STRUCTURE ABOVE.

A.01 AV DEVICE RACEWAY DETAILS - 1-GANG

SYMBOLS: AV1 CP1

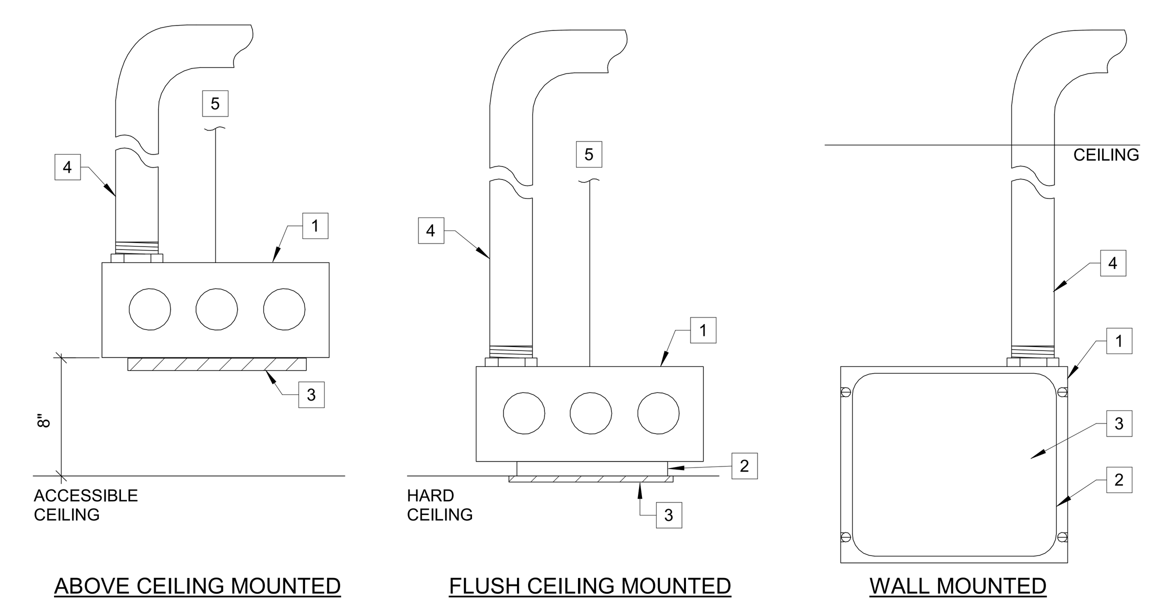

GENERAL NOTES:

1. REFER TO SYSTEM SYMBOL LEGEND - PATHWAY REQUIREMENT NOTES TO CONFIRM IF CONDUIT STUBS TO CEILING AND USE OF J-HOOKS IS ALLOWED OR IF CONTINUOUS CONDUIT IS REQUIRED FOR ALL LOCATIONS. PARTICULAR ATTENTION SHALL BE GIVEN TO CONDUIT ROUTING NOTES AS EACH SYSTEM (AV, COMM, SECURITY, ETC.) HAS SPECIFIC CONDUIT ROUTING REQUIREMENTS.
2. INTENT OF THIS DETAIL IS TO DEPICT AV RACEWAY AND CABLING REQUIREMENTS.
3. DATA TERMINATION MAY RESIDE WITHIN BACK BOX. REFER TO COMM DRAWINGS AND DETAIL C.03 FOR ADDITIONAL INFORMATION.

KEYNOTES: #

1. BACK-BOX: PROVIDE 4-11/16" X 4-11/16 "X 3-1/4" (HUBBEL 260) FLUSH MOUNTED BOX.
2. MUD-RING: PROVIDE 2-GANG MUD RING FOR MOUNTING OF DEVICE / FACEPLATE. MUD RING SHALL BE SEPARATE COMPONENT FROM BACK-BOX.
3. FACE PLATE: REQUIREMENTS VARY, REFER TO SPECIFIC DEVICE DETAILS AND AV ONE-LINES FOR ADDITIONAL REQUIREMENTS.
4. CONDUIT: PROVIDE (1) 1-1/4 INCH CONDUIT.
5. SUPPORT: PROVIDE THREADED ROD ATTACHED TO STRUCTURE ABOVE.

A.02 AV DEVICE RACEWAY DETAILS - 2-GANG

SYMBOLS: AV2 CP2 AVU

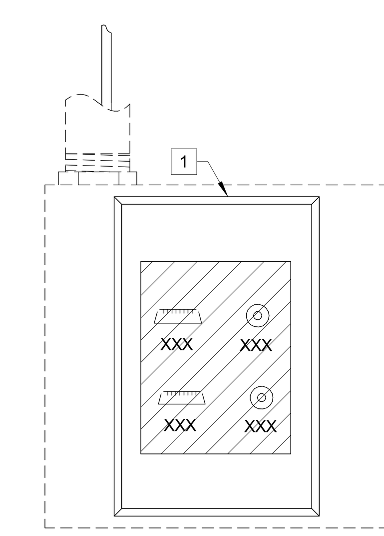

GENERAL NOTES:

1. AV INTERFACE, DATA OUTLET AND ASSOCIATE POWER RECEPTACLE SHOWN ON DRAWING TO BE LOCATED ON SAME WALL WITHIN ~3 FOOT OF EACH OTHER SHALL BE INSTALLED IN TANDUM. RELOCATE DATA AND POWER RECEPTACLE TO BE WITHIN 16-INCHES OF AND AT SAME HEIGHT AS AV INTERFACE. COORDINATE WITH ENGINEER FOR FURTHER DIRECTION.

KEYNOTES: #

1. AV INTERFACE: INTEFACE SHOWN IS GENERAL IN NATURE. REFER TO AV ONE-LINES FOR INTERFACE REQUIREMENTS. ALL PLATE SHALL BE ANODIZED ALUMINUM WITH ENGRAVED LABELS, UNLESS NOTED OTHERWISE. PROVIDE INTERFACE PLATE DRAWINGS WITHIN SUBMITTALS FOR ACCEPTANCE PRIOR TO PROCUREMENT.

A.09 AUDIO/VISUAL INTERFACE DEVICE

SYMBOLS: AV1 AV2

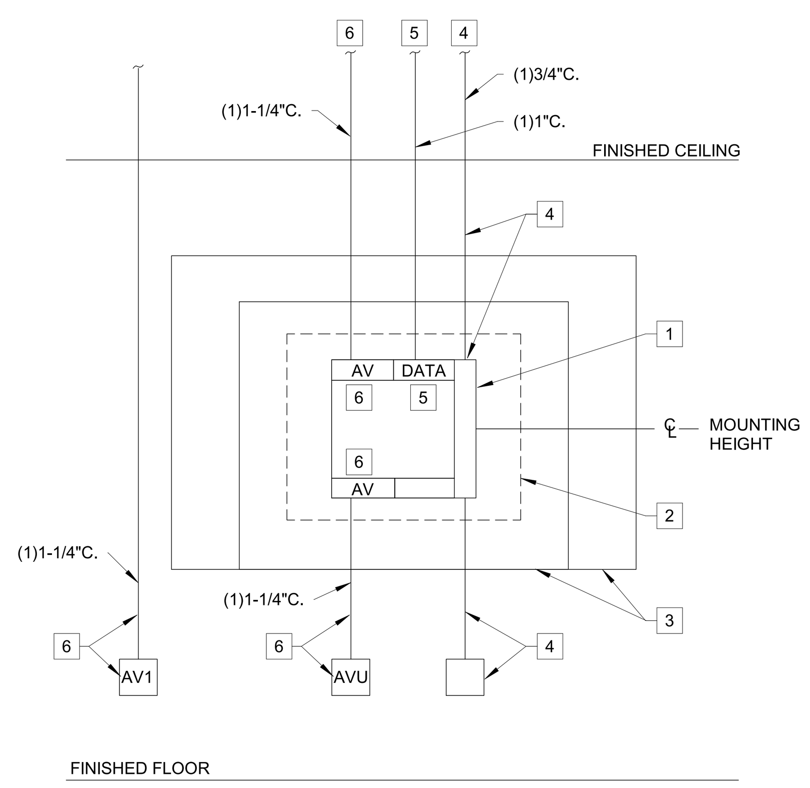

FLAT PANEL WALL BOX

BASIS OF DESIGN: CHIEF PAC526

GENERAL NOTES:

1. REFER TO SYSTEM SYMBOL LEGEND - PATHWAY REQUIREMENT NOTES TO CONFIRM IF CONDUIT STUBS TO CEILING AND USE OF J-HOOKS IS ALLOWED OR IF CONTINUOUS CONDUIT IS REQUIRED FOR ALL LOCATIONS. PARTICULAR ATTENTION SHALL BE GIVEN TO CONDUIT ROUTING NOTES AS EACH SYSTEM (AV, COMM, SECURITY, ETC.) HAS SPECIFIC CONDUIT ROUTING REQUIREMENTS.
2. REFER TO ARCHITECTURAL WALL ELEVATION / DETAIL (AS APPLICABLE). CONTRACTOR SHALL COORDINATE FINAL SOLUTION WITH ARCHITECT / ENGINEER DURING SUBMITTAL PROCESS.
3. BASIS OF DESIGN (BOD) PRODUCT INFORMATION IS BASED ON A COORDINATED SOLUTION FOR ALL SYSTEMS. ANY PRODUCT SUBSTITUTIONS SHALL BE APPROVED BY LOW VOLTAGE ENGINEER PRIOR TO INSTALLTION TO ENSURE DESIGN INTENT IS MET.
4. POWER, AV AND/OR DATA OUTLETS IN DEDICATED BACK-BOXES SHOWN AT 18" AFF MAY NOT APPLY TO ALL LOCATIONS. REFER TO RESPECTIVE FLOOR PLANS TO CONFIRM.

KEYNOTES #

1. WALL BOX: PROVIDE FLAT PANEL WALL BOX, ASSOCIATED DEVICE BOXES, DIVIDERS AND CONDUIT AS REQUIRED. LOCATE WALL BOX WITHIN WALL STUDS AND FLAT PANEL DISPLAY STRUCTURAL SUPPORTS.
2. STRUCTURAL SUPPORT: PROVIDE APPROPRIATE STRUCTURAL SUPPORT WITHIN WALL FOR WALL MOUNTED HARDWARE, CAPABLE OF SUPPORTING FIVE TIMES THE DISPLAY WEIGHT. REFER TO SPECIFICATIONS FOR ADDITIONAL INFORMATION.
3. VIDEO DISPLAY: SIZES VARY BY LOCATION. REFER TO LEGEND, FLOOR PLANS AND EQUIPMENT SCHEDULES.
4. POWER: REFER TO POWER DRAWINGS.
5. DATA / COAX: REFER TO TECHNOLOGY DRAWINGS FOR STRUCTURED CABLING REQUIREMENTS.
6. AV CONNECTIONS: REFER TO AV ONE-LINES FOR AV CABLING AND TERMINATION REQUIREMENTS.

A.05 VIDEO DISPLAY WITH ROUGH-IN DETAILS

SYMBOLS: FP AVU

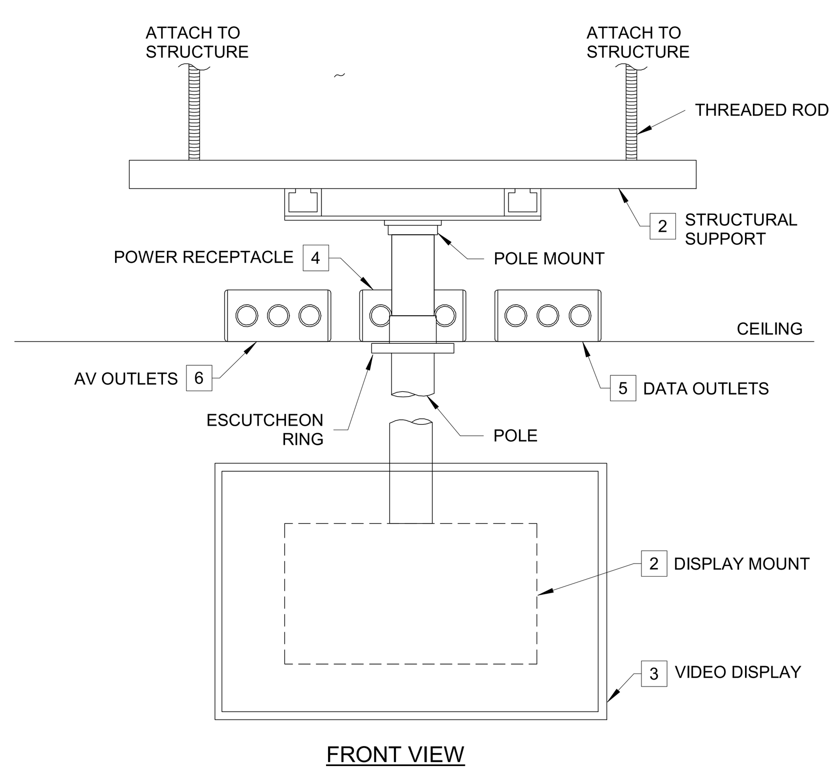

FRONT VIEW

GENERAL NOTES

1. REFER TO SYSTEM SYMBOL LEGEND - PATHWAY REQUIREMENT NOTES TO CONFIRM IF CONDUIT STUBS TO CEILING AND USE OF J-HOOKS IS ALLOWED OR IF CONTINUOUS CONDUIT IS REQUIRED FOR ALL LOCATIONS. PARTICULAR ATTENTION SHALL BE GIVEN TO CONDUIT ROUTING NOTES AS EACH SYSTEM (AV, COMM, SECURITY, ETC.) HAS SPECIFIC CONDUIT ROUTING REQUIREMENTS.
2. POWER, AV AND/OR DATA OUTLETS SHOWN FOR REFERENCE TO INDICATED DESIRED LOCATIONS. REFER TO RESPECTIVE FLOOR PLANS FOR ADDITIONAL INFORMATION.
3. COORDINATE WITH OTHER TRADES PRIOR TO INSTALLING DISPLAY STRUCTURAL SUPPORT AND DISPLAY TO AVOID OBSTRUCTIONS.

KEYNOTES #

1. PLENUM BOX: PROVIDE PLENUM BOX, ASSOCIATED DEVICE BOXES, AND CONDUIT AS REQUIRED. LOCATE PLENUM BOX ABOVE CEILING OR TIGHT TO EXPOSED STRUCTURE.
2. STRUCTURAL SUPPORT: PROVIDE APPROPRIATE STRUCTURAL SUPPORT ABOVE CEILING AND PENDANT MOUNT HARDWARE, EACH CAPABLE OF SUPPORTING FIVE TIMES THE DISPLAY WEIGHT. REFER TO SPECIFICATIONS FOR ADDITIONAL INFORMATION.
3. VIDEO DISPLAY (WITH MOUNT): SIZES VARY BY LOCATION. REFER TO LEGEND, FLOOR PLANS AND EQUIPMENT SCHEDULES.
4. POWER: REFER TO POWER DRAWINGS.
5. DATA / COAX: REFER TO TECHNOLOGY DRAWINGS FOR STRUCTURED CABLING REQUIREMENTS.
6. AV CONNECTIONS: REFER TO AV ONE-LINES FOR AV CABLING AND TERMINATION REQUIREMENTS (AS APPLICABLE).

A.06 CEILING MOUNTED VIDEO DISPLAY DETAILS

SYMBOLS: FP

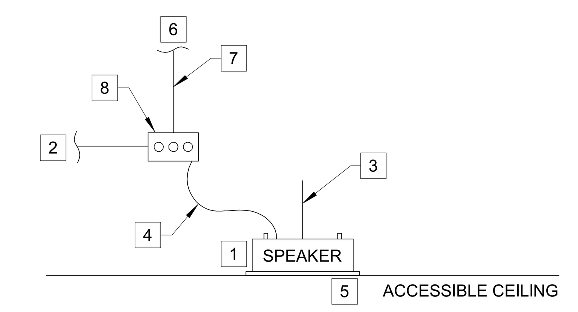

A.10/C - CEILING (ACCESSIBLE)

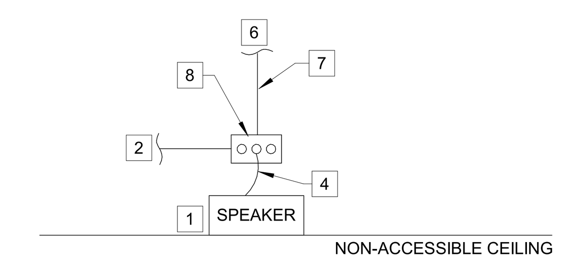

A.10/CN - CEILING (NON-ACCESSIBLE)

GENERAL NOTES:

1. REFER TO SYSTEM SYMBOL LEGEND - PATHWAY REQUIREMENT NOTES TO CONFIRM IF CONDUIT STUBS TO CEILING AND USE OF J-HOOKS IS ALLOWED OR IF CONTINUOUS CONDUIT IS REQUIRED FOR ALL LOCATIONS. PARTICULAR ATTENTION SHALL BE GIVEN TO CONDUIT ROUTING NOTES AS EACH SYSTEM (AV, COMM, SECURITY, ETC.) HAS SPECIFIC CONDUIT ROUTING REQUIREMENTS.
2. CONTRACTOR SHALL PROVIDE DEDICATED J-HOOKS AT 48" ON CENTER FOR ALL SPEAKER CABLING NOT RUN IN CONDUIT OR CABLE TRAY. ADDITIONALLY, CONTRACTOR SHALL PROVIDE CONDUITS THROUGH WALLS AND ACROSS INACCESSIBLE CEILING SPACES TO ENSURE UNOBSTRUCTED PATHWAY BACK TO MC-ROOM OR CABLE TRAY.

KEYNOTES #

1. BRIDGE: PROVIDE SUPPORT BRIDGE FOR ALL SPEAKER LOCATIONS MOUNTED WITHIN ACCESSIBLE CEILING TILES. PROVIDE BACK-BOX ONLY AND ALL OTHER REQUIRED MOUNTING COMPONENTS FOR SPEAKERS MOUNTED WITHIN HARD CEILINGS.
2. SPEAKER CONDUIT: PROVIDE CONDUIT FROM J-BOXES AT EACH SPEAKER TO NEAREST ACCESSIBLE CEILING
3. SAFETY CABLE: PROVIDE STAINLESS STEEL CABLE FROM THE SPEAKER ASSEMBLY TO CEILING DECK OR STRUCTURAL
4. LOUDSPEAKER CABLE: REFER TO AV ONE-LINES AND / OR SCHEDULES FOR CIRCUITING INFORMATION.
5. DROP CEILING: WHERE APPLICABLE, SPEAKER CUTOUTS SHALL BE CENTERED IN CEILING TILES.
6. CEILING DECK / STRUCTURAL STEEL: CONFIRM WITH STRUCTURAL ENGINEER PRIOR TO DRILLING / INSTALLING ATTATCHMENT POINTS
7. SUPPORT: PROVIDE THREADED ROD ATTACHED TO STRUCTURE ABOVE.
8. RACEWAY: REFER TO DETAIL A.01 FOR RACEWAY REQUIREMENTS INCLUDING BACK-BOX AND CONDUIT.

A.10 AV SYSTEM SPEAKER DETAILS

SYMBOLS: S X

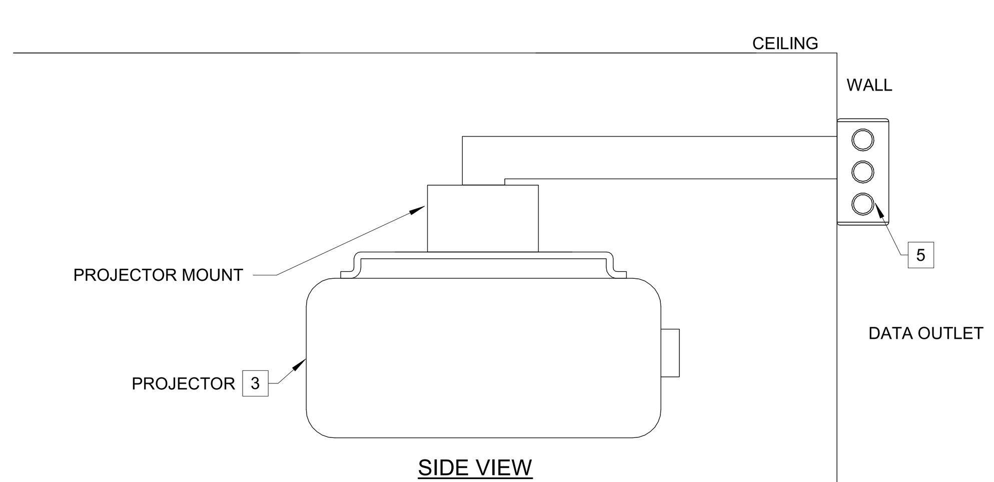

SIDE VIEW

A.05 / ST - SHORT THROW WALL MOUNT

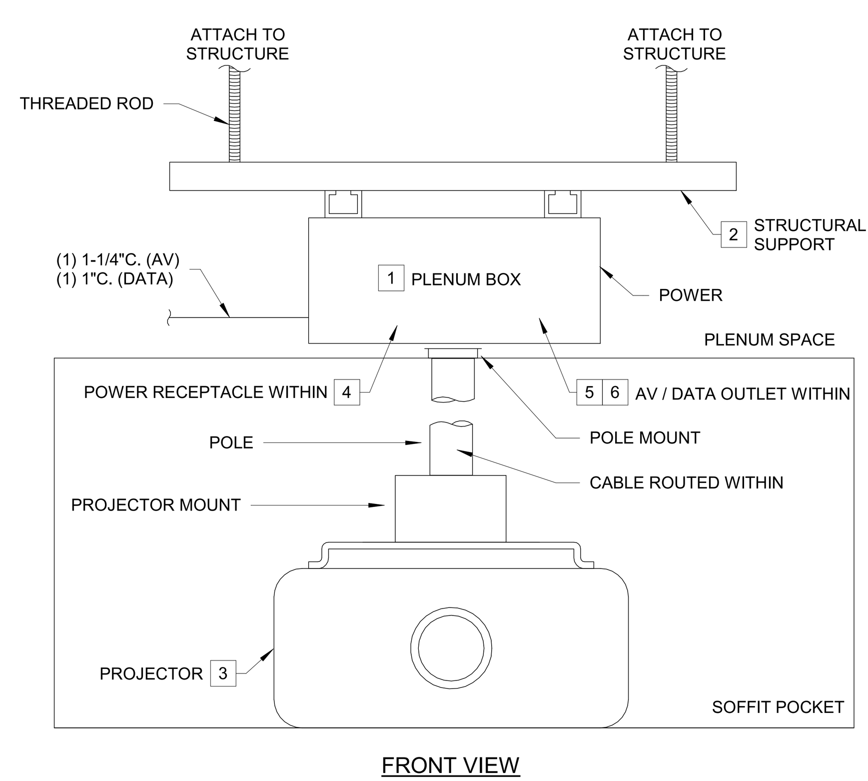

FRONT VIEW

A.05 / N - PROJECTOR WITHIN NON-ACCESSIBLE CEILING

GENERAL NOTES

1. REFER TO DEVICE SYMBOL NOTES ON TECHNOLOGY LEGEND TO CONFIRM IF CONDUIT STUBS TO CEILING AND USE OF J-HOOKS IS ALLOWED OR IF CONTINUOUS CONDUIT IS REQUIRED FOR ALL LOCATIONS.
2. POWER, AV AND/OR DATA OUTLETS SHOWN FOR REFERENCE TO INDICATED DESIRED LOCATIONS. REFER TO RESPECTIVE FLOOR PLANS FOR ADDITIONAL INFORMATION.
3. COORDINATE WITH OTHER TRADES PRIOR TO INSTALLING DISPLAY STRUCTURAL SUPPORT AND PROJECTOR TO AVOID OBSTRUCTIONS.
4. DIGITAL KEYSTONE CORRECTION SHALL NOT BE USED. PROJECTOR SHALL BE LOCATED AND ADJUSTED FIRST BY MOUNT THEN BY OPTICAL ADJUSTMENT SO THE IMAGE FILLS PROJECTION SCREEN/AREA AND IS FREE OF ANY KEYSTONING OR OTHER DISTORTION.

KEYNOTES #

1. PLENUM BOX: PROVIDE PLENUM BOX, ASSOCIATED DEVICE BOXES, AND CONDUIT AS REQUIRED. LOCATE PLENUM BOX ABOVE CEILING OR TIGHT TO EXPOSED STRUCTURE.
2. STRUCTURAL SUPPORT: PROVIDE APPROPRIATE STRUCTURAL SUPPORT ABOVE CEILING AND PENDANT MOUNT HARDWARE, EACH CAPABLE OF SUPPORTING FIVE TIMES THE PROJECTOR WEIGHT. REFER TO SPECIFICATIONS FOR ADDITIONAL INFORMATION.
3. PROJECTOR: SIZE AND TYPE MAY VARY BY LOCATION. MOUNT IN SUCH A WAY AS TO CONCEAL EQUIPMENT AND CONNECTIONS AS MUCH AS POSSIBLE.
4. POWER: REFER TO POWER DRAWINGS.
5. DATA / COAX: REFER TO TECHNOLOGY DRAWINGS FOR STRUCTURED CABLING REQUIREMENTS.
6. AV CONNECTIONS: REFER TO AV ONE-LINES FOR AV CABLING AND TERMINATION REQUIREMENTS.

A.08 VIDEO PROJECTOR DETAILS

SYMBOLS: P

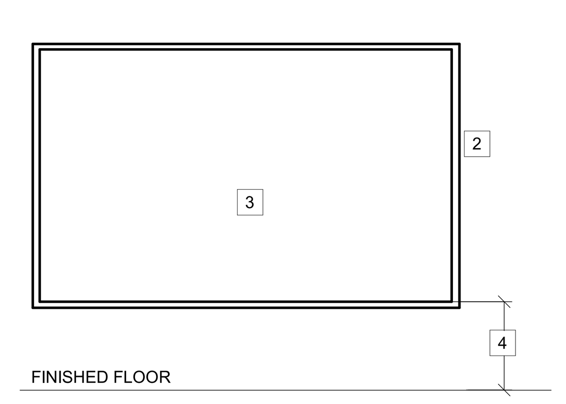

GENERAL NOTES:

1. REFER TO LEGEND, FLOOR PLANS AND SPECIFICATIONS FOR ADDITIONAL INFORMATION ON SPECIFIC SIZES AND MOUNTING CONDITIONS.
2. NOTIFY ENGINEER IN THE EVENT THE ASPECT RATIO OF PROJECTOR AND SCREEN DO NOT MATCH.

KEYNOTES: #

1. SCREEN HOUSING: N/A
2. STRUCTURAL SUPPORT: PROVIDE WALL MOUNTING HARDWARE PER MANUFACTURER RECOMMENDATIONS (AS APPLICABLE).
3. SCREEN SURFACE: PROVIDE FIXED 16:10 ASPECT RATIO AND MATTE WHITE FINISH, U.N.O.
4. SCREEN POSITION: PROVIDE 48" FROM BOTTOM OF IMAGE SURFACE TO FINISHED FLOOR AT TYPICAL LOCATIONS. COORDINATE WITH AV CONSULTANT IF 48" MINIMUM HEIGHT IS NOT ATTAINABLE.

A.07 PROJECTOR SCREEN DETAIL

SYMBOLS:

1 A.02 - AV DEVICE RACEWAY DETAILS - 2-GANG
NO SCALE

BRINKLEY SARGENT WIGINTON ARCHITECTS

Architect: Brinkley Sargent Wiginton Architects (972) 960-9970
Landscape: Kendall Landscape Architecture (214) 739-3226
Structural: L.A. Fuess Partners, Inc (214) 593-1118
MEP: M-E Engineers (214) 741-1589
Civil: KSA Engineers, Inc (903) 236-7700
Technology: M-E Engineers (303) 421-6656

LONGVIEW POLICE DEPARTMENT

XXXX SOUTH ST. LONGVIEW, TEXAS 75601

History

#	Date	Description

STATE OF TEXAS
ANDREW SHIVLEY
109010
LICENSED
PROFESSIONAL ENGINEER
ME Engineers, Inc.
F-10231
08/19/2020

AV DETAILS

20513
08/19/2020
AV502

BID ISSUE

8/17/2020 2:28:35 PM
C:\Revit Projects\2019\LPD_CENTRAL_T19_Steven.Maxwell@me-engineers.com.rvt

© 2020 Brinkley Sargent Wigginton Architects, Inc.

GENERAL FIRE PROTECTION PRICING NOTES

1. CONTRACTOR IS TO BE ENGINEER OF RECORD, DESIGN TO CONFORM TO NFPA AND LOCAL JURISDICTION. REFER TO SPECIFICATIONS.

FIRE PROTECTION GENERAL NOTES

1. THE FACILITY IS TO BE FULLY SPRINKLED. CONFIRM ALL OCCUPANCY CLASSIFICATIONS AND PROVIDE CODE COMPLIANT SYSTEM.
2. ALL SPRINKLER HEADS ARE TO BE QUICK RESPONSE TYPE.
3. COORDINATE ALL PIPE ROUTING AND INSTALLATION TECHNIQUES WITH THE ARCHITECT AND OBTAIN HIS APPROVAL PRIOR TO FABRICATION OR INSTALLATION. OF PARTICULAR CONCERN IS THE APPEARANCE AND SECURITY OF EXPOSED PIPING IN PUBLIC AREAS. SEEK DIRECTION FROM THE ARCHITECT TO DETERMINE WHERE MOCK-UPS WILL BE REQUIRED AND IMPLEMENT WHERE DIRECTED.
4. THE ENTIRE BUILDING SHALL BE SERVED BY A WET PIPE TYPE AND DRY SYSTEMS IN AREAS WHERE ABOVE FREEZING CANNOT BE MAINTAINED. COORDINATE ELECTRICAL, FIRE PROTECTION AND MECHANICAL SPACE REQUIREMENTS CAREFULLY BEFORE PROCEEDING WITH INSTALLATION. ALL HAZARDS TO BE PER NFPA.
5. PROVIDE FLEXIBLE JOINTS IN MAIN PIPING WHERE PIPING CROSSES EXPANSION JOINTS.
6. SUBMIT SHOP DRAWINGS FOR APPROVAL PRIOR TO FABRICATION AND INSTALLATION IN ACCORDANCE WITH SPECIFICATIONS.
7. REFER TO THE SPECIFICATIONS FOR ADDITIONAL REQUIREMENTS. NOTE THAT THIS CONTRACTOR IS TO COMPLY WITH THE GENERAL REQUIREMENTS OF DIVISION 22 & 23 AND NOT JUST DIVISION 21.
8. PROVIDE WIRE GUARDS ON SPRINKLERS IN MECHANICAL ROOMS, STORAGE AREAS, AND OTHER AREAS SUBJECT TO DAMAGE.
9. PRIOR TO BID OBTAIN A COPY OF THE MOST RECENT ARCHITECTURAL DRAWINGS AND COORDINATE SPRINKLER COVERAGE WITH THE REFLECTED CEILING PLANS, ADDITIONAL HEADS MAY BE REQUIRED DUE TO OBSTRUCTIONS AND EXPOSED STRUCTURE.
10. PROVIDE ADDITIONAL HOSE CABINETS AT LOCATIONS AS REQUIRED TO ENSURE THAT NO SPACE IN THE BUILDING IS MORE THAT 130 FT. FROM A HOSE CONNECTION PER NFPA. COORDINATE LOCATIONS WITH THE ARCHITECT & FINAL APPROVAL TO BE BY AHJ. 200' TRAVEL DISTANCE MAY BE USED IF APPROVED BY THE AHJ
11. THE AUTOMATIC FIRE SPRINKLER SYSTEM SHALL CONFORM TO THE REQUIREMENTS OF THE LATEST EDITION OF THE NATIONAL FIRE PROTECTION ASSOCIATION STANDARD 13.
12. INSTALLATION OF THE FIRE PROTECTION SPRINKLER SYSTEM SHALL NOT BE STARTED UNTIL COMPLETE PLANS AND CALCULATIONS (INCLUDING WATER SUPPLY INFORMATION) HAVE BEEN APPROVED BY THE AHJ.
13. PROVIDE A WET SPRINKLER SYSTEM IN ALL ELECTRICAL AND TELECOM ROOMS WITH A HIGH TEMPERATURE HEAD (WIRE FILAMENT) ENCLOSED IN A WIRE CAGE.
14. SPRINKLER ALL MECHANICAL CHASES PER NFPA 13.8.15
15. REFER TO MOST CURRENT LIFE SAFETY REPORT FOR ADDITIONAL FIRE PROTECTION REQUIREMENTS.
16. DESIGN TO CONFORM TO NFPA 101 LIFE SAFETY CODE.

FIRE SPRINKLERS

1. THE BUILDING SHALL BE SPRINKLERED THROUGHOUT.
2. SPRINKLERS IN FOR ALL AREAS SUBJECT TO FREEZING TO BE ON DRY PIPE SYSTEM.
3. REFER TO NFPA 13 FOR OCCUPANCY AND DENSITY REQUIREMENTS
4. DESIGN DENSITIES PER NFPA 13.11.2.3 USING HYDRAULIC CALCULATION METHOD.
5. ELEVATORS: (TO BE CONFIRMED BY THE AHJ)

   SPRINKLERS IN ELEVATOR SHAFTS TO BE IN COMPLIANCE WITH THE REQUIREMENTS OF ANSI A-17-1

   PROVIDE 286° F WITH HEAD GUARDS

   SPRINKLERS REQUIRED IN THE PITS OF ALL ELEVATORS
6. PROVIDE SPRINKLER COVERAGE BELOW BOTTOM LANDING AT ALL STAIRS.

INSTALLATION REQUIREMENTS

1. COORDINATE ALL PIPE ROUTING WITH DUCTWORK, STRUCTURE, PLUMBING ETC.
2. COORDINATE ALL SPRINKLER HEAD INSTALLATION AND TYPE WITH ARCHITECT AND ARCHITECTURAL CEILING CONDITIONS.

DESIGN CRITERIA

1. NFPA AND FIRE DEPARTMENT REQUIREMENTS, INCLUDING BUT NOT LIMITED TO THE FOLLOWING :
2. 250 GPM @ 100 PSI AT THE ROOF MANIFOLD
3. FIRE SYSTEM SIZED FOR 500 GPM FOR THE FIRST STANDPIPE AND 25O GPM FOR EACH ADDITIONAL STANDPIPE NOT TO EXCEED 1000 GPM. S
4. CONTRACTOR SHALL PROVIDE ADDITIONAL HOSE VALVE AS REQUIRED BY THE AHJ AND NFPA FOR TRAVEL DISTANCE. CURRENT DOCUMENTS IDENTIFY SOME ADDITIONAL HOSE VALVE LOCATIONS BUT NOT ALL THAT WILL BE REQUIRED
5. CONTRACTOR SHALL DETERMINE AREA THAT CANNOT BE MAINTAINED ABOVE FREEZING AND PROVIDE DRY SYSTEMS.
6. ALL EXTERIOR APARTMENT BALCONIES SHALL BE PROVIDED WITH A DRY PENDANT SPRINKLER HEAD SERVED FROM THE WET SPRINKLER SYSTEM.
7. DRY PIPE SPRINKLER SYSTEMS SHALL BE PROVIDED WITH SCHEDULE 40 GALVANIZED PIPING AND A NITROGEN FILL SYSTEM.
8. TRASH CHUTES LOCATED IN BUILDING ONE SHALL BE SUPPLIED FROM A DEDICATED SPRINKLER FLOW SWITCH.
9. PROVIDE SPRINKLER HEADS ON EACH TRASH COMPACTOR HOPPER SYSTEM AS REQUIRED PER NFPA 82-7.2.1.
10. PROVIDE CLOSELY SPACED SPRINKLER HEADS IN AREA 3001

STANDPIPES

1. THE STANDPIPES WILL BE CLASS 1, 2-1/2" OUTLETS AND MATCH LOCAL FIRE DEPARTMENT (NATIONAL STANDARD) THREADS. (TO BE CONFIRMED WITH THE AHJ).
2. REFER TO PLANS FOR PROPOSED HOSE CONNECTION LOCATIONS. EXACT LOCATIONS TO BE COORDINATED WITH LOCAL FIRE DEPARTMENT AND ARCHITECT.
3. FIRE HOSE VALVE CONNECTIONS SHALL BE LOCATED AT THE INTERMEDIATE LANDING OF ALL STAIRS.
4. PROVIDE KNOX LOCKING CAPS ON ALL STANDPIPES.

FIRE PROTECTION LEGEND

(NOT ALL SYMBOLS LISTED BELOW ARE BEING USED IN THIS SET OF DRAWINGS)

SYMBOL	ABBR	DESCRIPTION	SYMBOL	ABBR	DESCRIPTION	SYMBOL	ABBR	DESCRIPTION
		ELBOW UP		BFV	BUTTERFLY VALVE		FCA	FLOOR CONTROL VALVE ASSEMBLY
		ELBOW DOWN		BV	BALL VALVE			FIRE HOSE CONNECTOR
		TEE UP		OS&Y	OUTSIDE STEM & YOKE GATE VALVE			FIRE HOSE CONN. W/CABINET
		TEE DOWN		ER	ECCENTRIC REDUCER			
	GV	GATE VALVE		EJ	EXPANSION W/ ANCHOR			
	CV	CHECK VALVE		U	UNION			
	PRV	PRESSURE REDUCING VALVE	FS	FS	FLOW SWITCH			
	SV	SOLENOID VALVE	TS	TS	TAMPER SWITCH			
	GLV	GLOBE VALVE (STRAIGHT PATTERN)		PG.	PRESSURE GAUGE W/GAUGE COCK			

Architect: Brinkley Sargent Wigginton Architects (972) 960-9970
Landscape: Kendall Landscape Architecture (214) 739-3226
Structural: L.A. Fuess Partners, Inc (214) 593-1118
MEP: M-E Engineers (214) 741-1589
Civil: KSA Engineers, Inc (903) 236-7700
Technology: M-E Engineers (303) 421-6656

BRINKLEY SARGENT WIGINTON ARCHITECTS

LONGVIEW POLICE DEPARTMENT

518 W. SOUTH ST. LONGVIEW, TEXAS 75601

History

#	Date	Description

STATE OF TEXAS
LAUREN F. BERRY
117369
LICENSED PROFESSIONAL ENGINEER

ME Engineers, Inc.
F-10231
08/19/2020

FIRE PROTECTION LEGEND AND NOTES

20513
08/19/2020
FP001

BID ISSUE

6/17/2020 9:55:46 AM
C:\Revit Projects\2015\LPD_CENTRAL_R19_ron.rvt

© 2020 Brinkley Sargent Wigginton Architects, Inc.

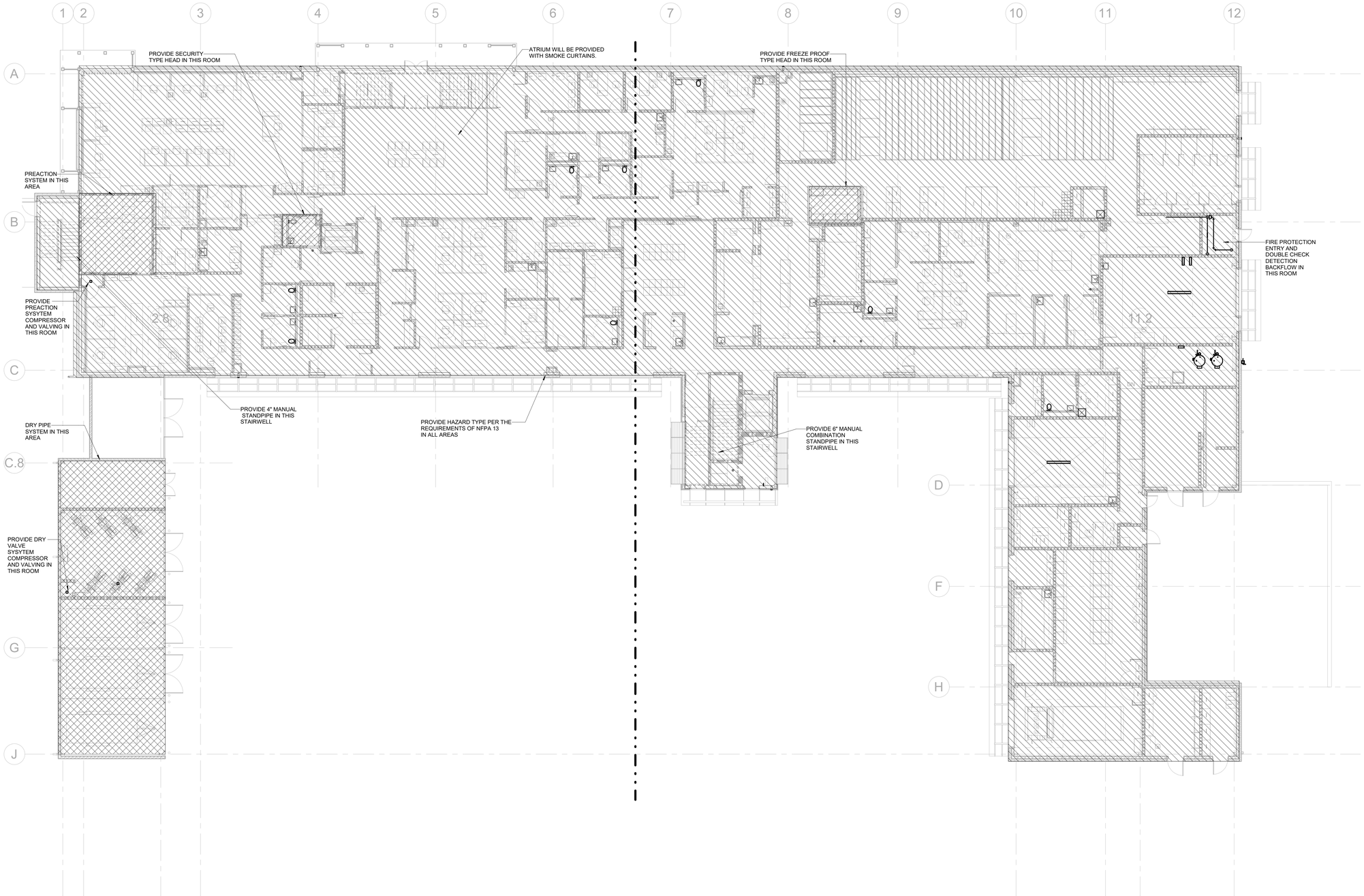

1 LEVEL 1 - FIRE PROTECTION OVERALL PLAN
3/32" = 1'-0"

8/17/2020 9:05:55 AM

C:\Revit Projects\2019\LPD_CENTRAL_R19_sm.rvt

Architect: Brinkley Sargent Wigginton Architects (972) 960-9970
Landscape: Kendall Landscape Architecture (214) 739-3226
Structural: L.A. Fuess Partners, Inc (214) 593-1118
MEP: M-E Engineers (214) 741-1589
Civil: KSA Engineers, Inc (903) 236-7700
Technology: M-E Engineers (303) 421-6656

BRINKLEY SARGENT WIGINTON ARCHITECTS

LONGVIEW POLICE DEPARTMENT

518 W. SOUTH ST. LONGVIEW, TEXAS 75601

History

#	Date	Description

STATE OF TEXAS
LAUREN F. BERRY
117369
LICENSED
PROFESSIONAL ENGINEER
ME Engineers, Inc.
F-10231
08/19/2020

LEVEL 1 - FIRE PROTECTION OVERALL PLAN

20513
08/19/2020
FP210

BID ISSUE

© 2020 Brinkley Sargent Wigginton Architects, Inc.

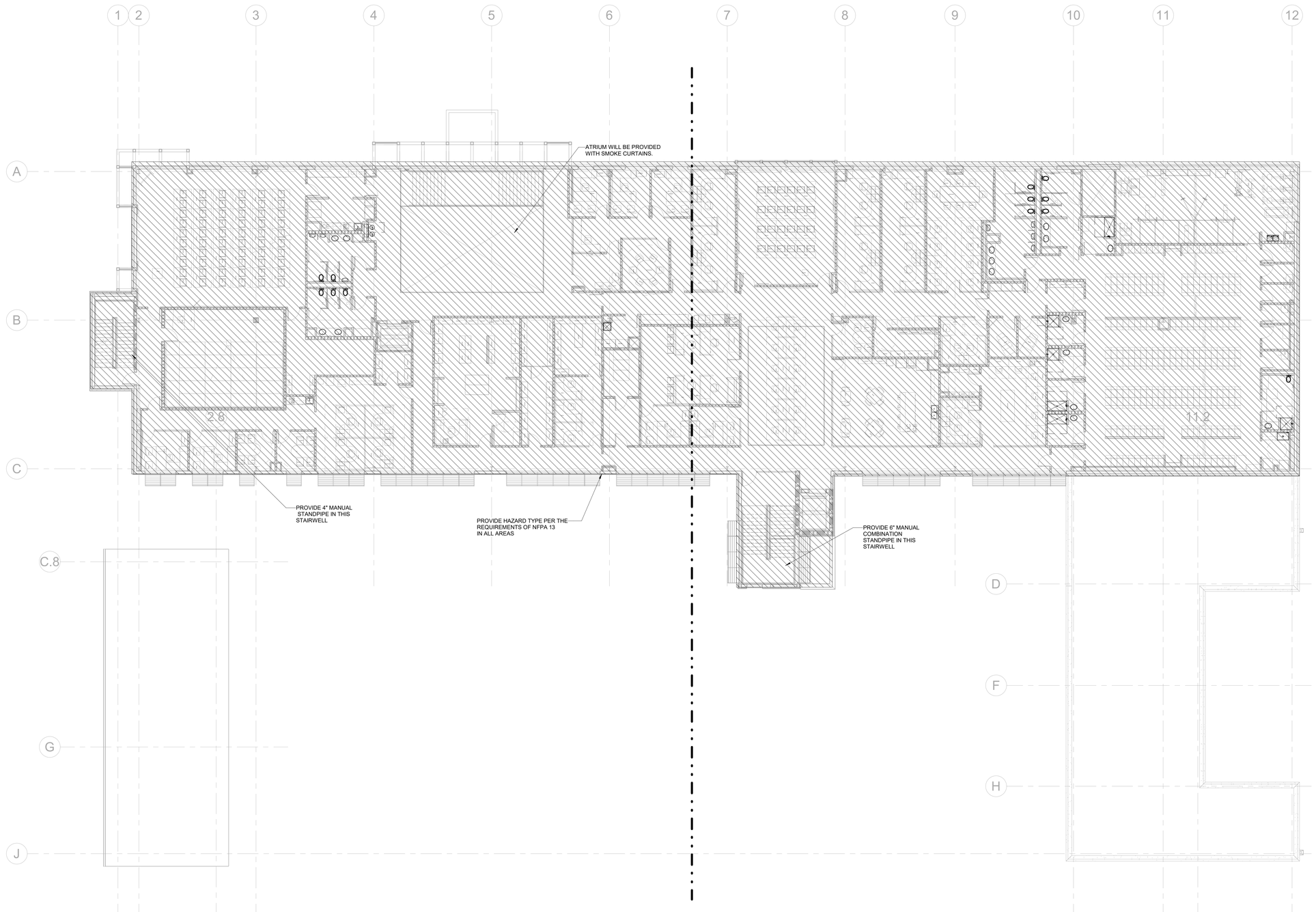

1 LEVEL 2 - FIRE PROTECTION OVERALL PLAN
3/32" = 1'-0"

Architect: Brinkley Sargent Wigginton Architects (972) 960-9970
Landscape: Kendall Landscape Architecture (214) 739-3226
Structural: L.A. Fuess Partners, Inc (214) 593-1118
MEP: M-E Engineers (214) 741-1589
Civil: KSA Engineers, Inc (903) 236-7700
Technology: M-E Engineers (303) 421-6656

BRINKLEY SARGENT WIGINTON ARCHITECTS

LONGVIEW POLICE DEPARTMENT

518 W. SOUTH ST. LONGVIEW, TEXAS 75601

History

#	Date	Description

STATE OF TEXAS
LAUREN F. BERRY
117369
LICENSED PROFESSIONAL ENGINEER
ME Engineers, Inc.
F-10231
08/19/2020

LEVEL 2 - FIRE PROTECTION OVERALL PLAN

20513
08/19/2020
FP220

BID ISSUE

8/17/2020 9:05:53 AM

C:\Revit Projects\2019\LPD_CENTRAL_FTB_rcn-aerdf.rvt

© 2020 Brinkley Sargent Wigginton Architects, Inc.

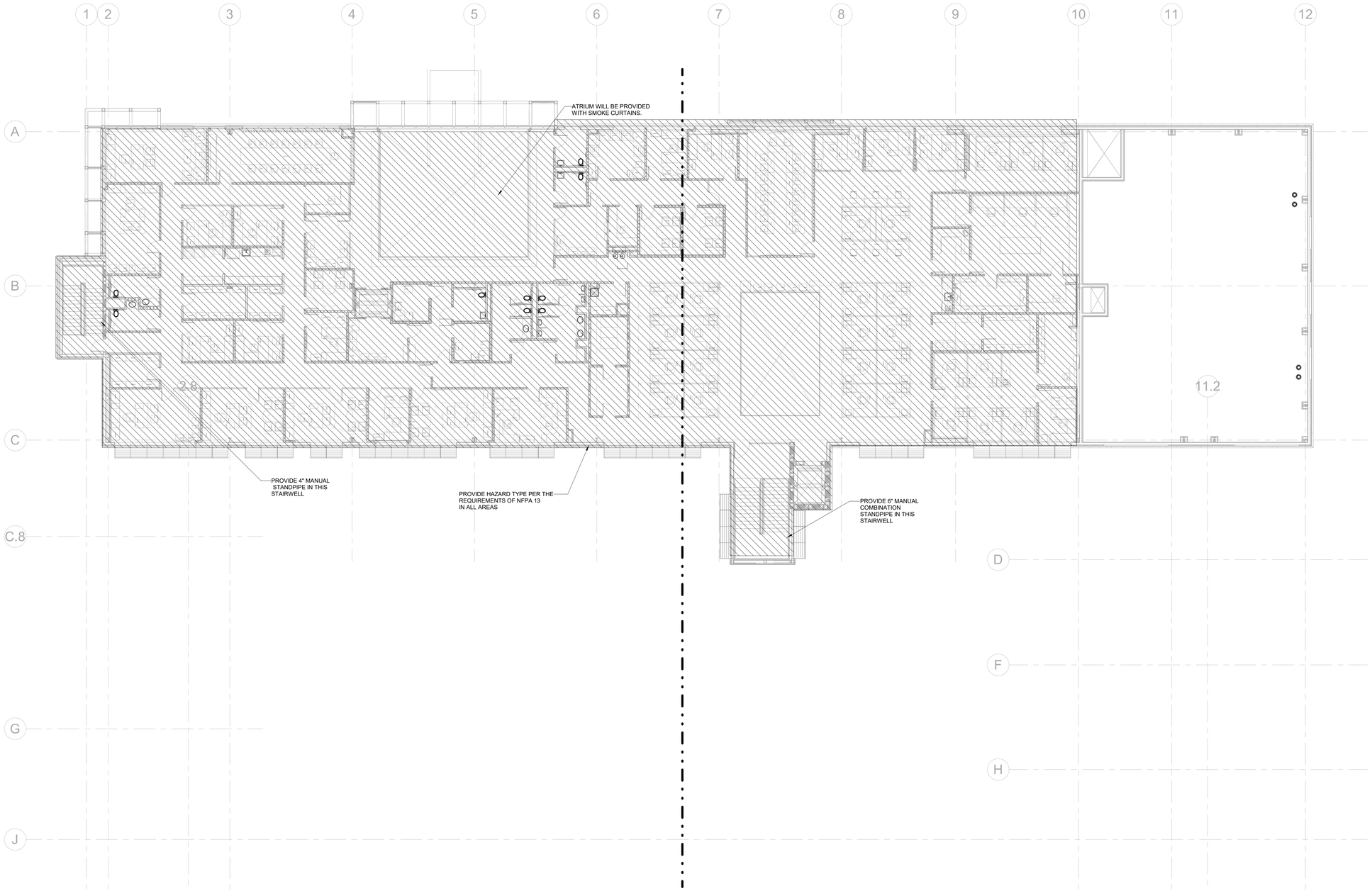

1 LEVEL 3 - FIRE PROTECTION OVERALL PLAN
3/32" = 1'-0"

Architect: Brinkley Sargent Wigginton Architects (972) 960-9970
Landscape: Kendall Landscape Architecture (214) 739-3226
Structural: L.A. Fuess Partners, Inc (214) 593-1118
MEP: M-E Engineers (214) 741-1589
Civil: KSA Engineers, Inc (903) 236-7700
Technology: M-E Engineers (303) 421-6656

BRINKLEY SARGENT WIGINTON ARCHITECTS

LONGVIEW POLICE DEPARTMENT

518 W. SOUTH ST. LONGVIEW, TEXAS 75601

History		
#	Date	Description

STATE OF TEXAS
LAUREN F. BERRY
117369
LICENSED PROFESSIONAL ENGINEER

ME Engineers, Inc.
F-10231
08/19/2020

LEVEL 3 - FIRE PROTECTION OVERALL PLAN

20513
08/19/2020
FP230

BID ISSUE

6/17/2020 9:05:54 AM

C:\Revit Projects\2015\LPD_CENTRAL_FY19_revit-central

© 2020 Brinkley Sargent Wigginton Architects, Inc.

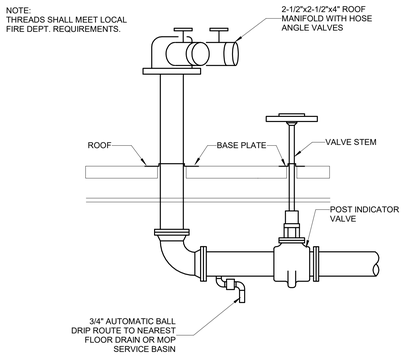

7 FP-ROOF MANIFOLD PIPING DETAIL
NO SCALE

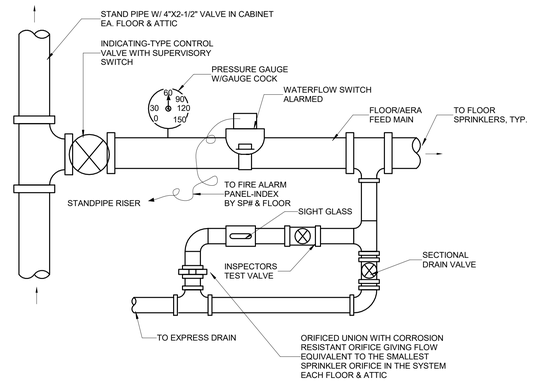

4 FP-FLOOR CONTROL VALVE DETAIL
NO SCALE

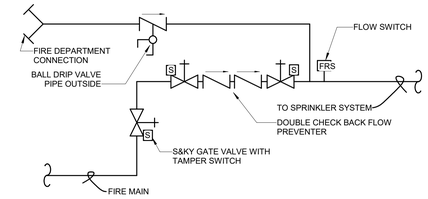

1 FP-FIRE ENTRY PIPING DETAIL
NO SCALE

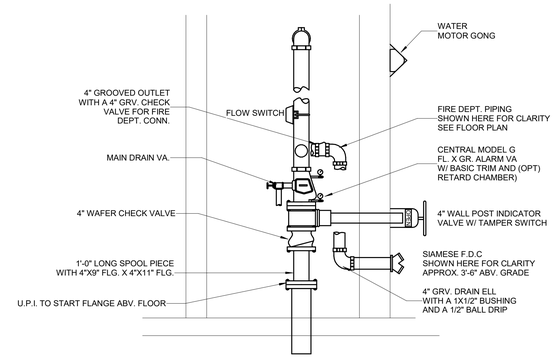

2 FP-FIRE PROTECTION ENTRY RISER
NO SCALE

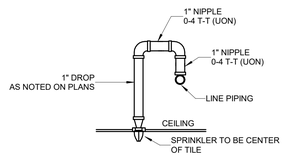

8 FP-ARMOVER DETAIL
NO SCALE

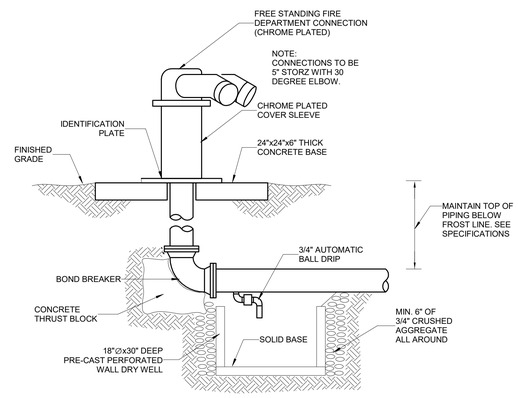

5 FP-FREE STANDING F.D.C. DETAIL
NO SCALE REFERENCE C-112 FOR LOCATION

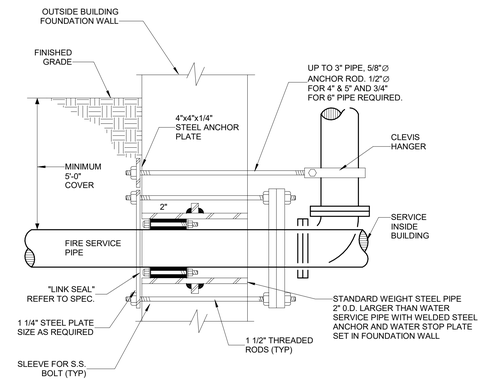

3 FP-FIRE SERVICE SLEEVE DETAIL
NO SCALE

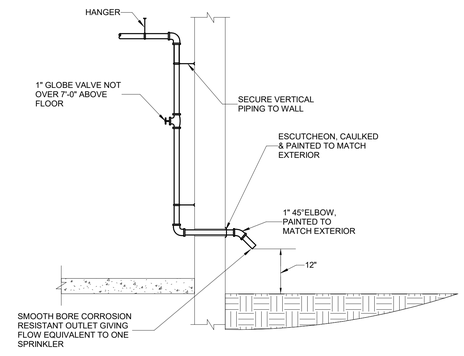

6 FP-INSPECTOR TEST CONNECTION
NO SCALE

BRINKLEY SARGENT WIGINTON ARCHITECTS

Architect: Brinkley Sargent Wigginton Architects (972) 960-9970
Landscape: Kendall Landscape Architecture (214) 739-3226
Structural: L.A. Fuess Partners, Inc (214) 593-1118
MEP: M-E Engineers (214) 741-1589
Civil: KSA Engineers, Inc (903) 236-7700
Technology: M-E Engineers (303) 421-6656

LONGVIEW POLICE DEPARTMENT

518 W. SOUTH ST. LONGVIEW, TEXAS 75601

History		
#	Date	Description

STATE OF TEXAS
LAUREN F. BERRY
117369
LICENSED PROFESSIONAL ENGINEER
ME Engineers, Inc.
F-10231
08/19/2020

FIRE PROTECTION DETAILS

20513
08/19/2020
FP501

BID ISSUE

8/17/2020 9:05:57 AM

C:\Revit Projects\2019\LPD_CENTRAL_PYB_central.rvt

© 2019 Brinkley Sargent Wigginton Architects, Inc.

A TREE PROTECTION AND REMOVAL PLAN

1" = 30'-0" 0 15' 30' 60'

B PREPARATION GENERAL NOTES

1. PLAN PREPARED BY:

MICHAEL S. KENDALL
KENDALL + LANDSCAPE ARCHITECTURE
6976 SANTA BARBARA
DALLAS, TEXAS 75214
PHONE: (214) 739-3226
E-MAIL: MIKE@KENDALL7.COM
TEXAS LANDSCAPE ARCHITECT LICENSE NO. 1127

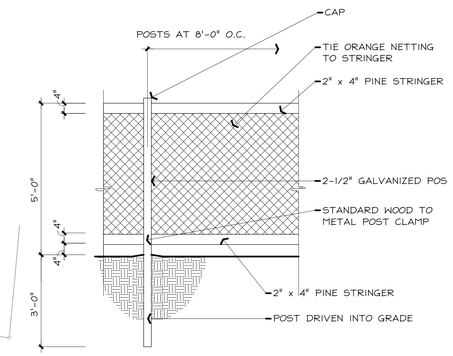

C TREE PROTECTION FENCE - ELEVATION

1/2" = 1'-0" 0 2'

D LEGEND

EXISTING TREE TO REMAIN

EXISTING TREE TO BE REMOVED

TREE PROTECTION FENCING

LONGVIEW POLICE DEPARTMENT

XXXX SOUTH ST. LONGVIEW, TEXAS 75601

Architect: Brinkley Sargent Wigginton Architects (972) 960-9970
Landscape: Kendall Landscape Architecture (214) 739-3226
Structural: L.A. Fuess Partners, Inc (214) 593-1118
MEP: M-E Engineers (214) 741-1589
Civil: KSA Engineers, Inc (903) 236-7700
Technology: M-E Engineers (303) 421-6656

BRINKLEY SARGENT WIGINTON ARCHITECTS

History

#	Date	Description

REGISTERED LANDSCAPE ARCHITECT
MICHAEL STEPHEN KENDALL
1127
STATE OF TEXAS
08.19.2020

TREE PROTECTION AND REMOVAL PLAN

21719
08/19/20

L1.01

ISSUE FOR CONSTRUCTION

© 2019 Brinkley Sargent Wigginton Architects, Inc.

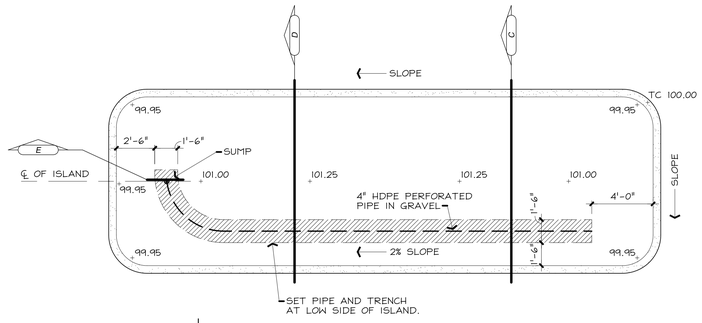

F PARKING LOT ISLAND DRAINAGE PLAN

1/4" = 1'-0" 0 4'

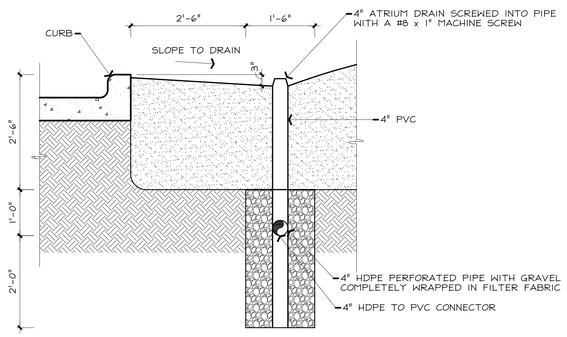

E PARKING LOT ATRIUM DRAIN & CLEANOUT SECTION

3/4" = 1'-0" 0 6"

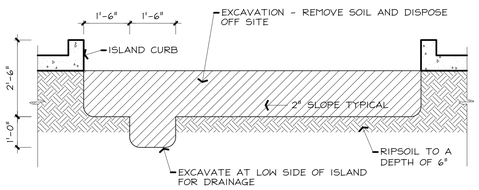

D PARKING LOT ISLAND EXCAVATION SECTION

1/2" = 1'-0" 0 1'

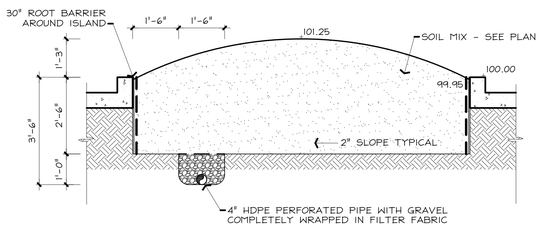

C PARKING LOT ISLAND BACKFILL SECTION

1/2" = 1'-0" 0 1'

B SITE PLAN LEGEND

- ISLAND SOIL MIX
- HDPE AND DRAIN
- SIDEWALK PAVING
- BRICK PAVERS

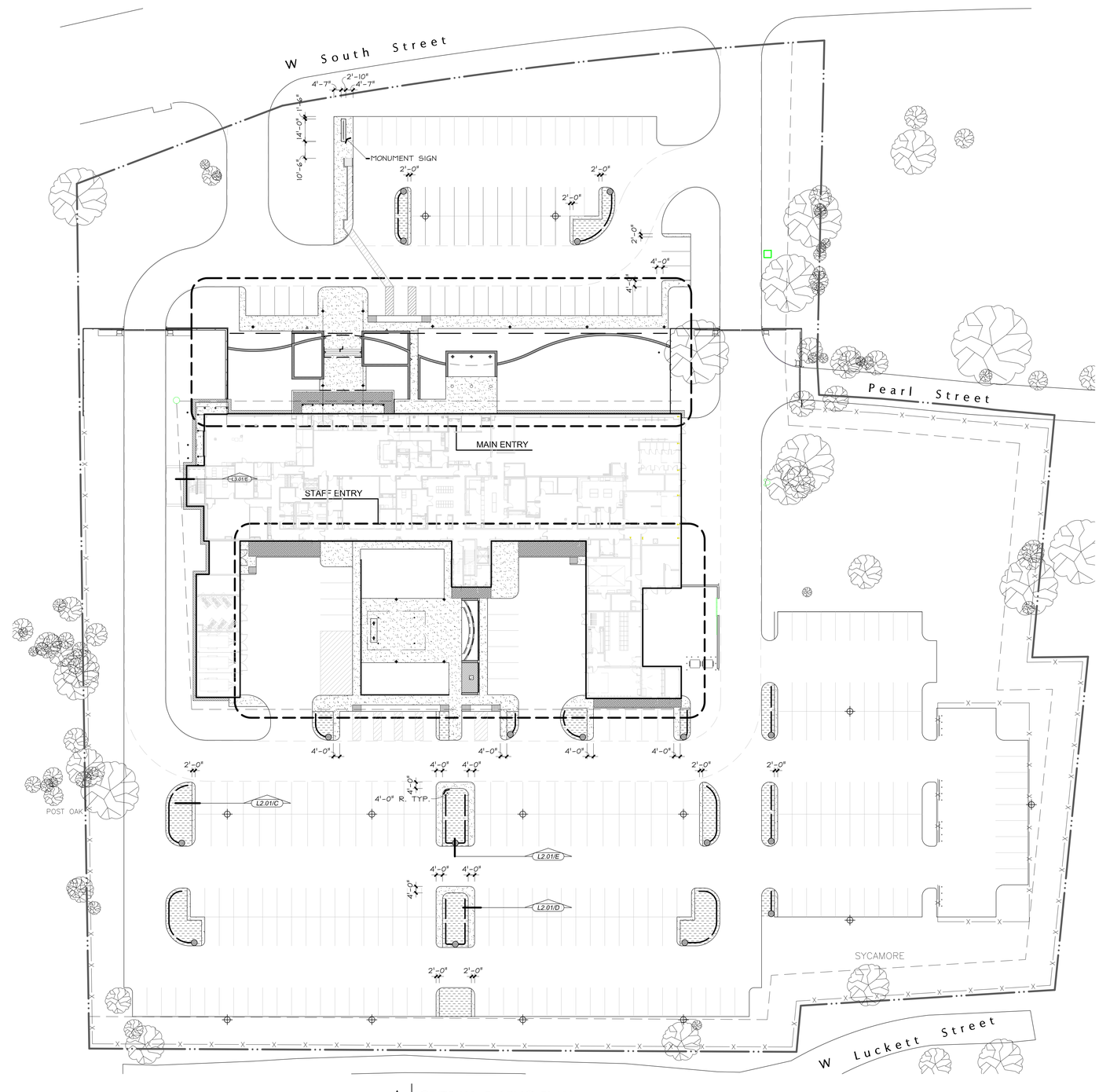

A OVERALL PAVING PLAN

1" = 30'-0" 0 15' 30' 60'

BRINKLEY SARGENT WIGINTON ARCHITECTS

Architect: Brinkley Sargent Wigginton Architects (972) 960-9970
Landscape: Kendall Landscape Architecture (214) 739-3226
Structural: L.A. Fuess Partners, Inc (214) 593-1118
MEP: M-E Engineers (214) 741-1589
Civil: KSA Engineers, Inc (903) 236-7700
Technology: M-E Engineers (303) 421-6656

LONGVIEW POLICE DEPARTMENT

XXXX SOUTH ST. LONGVIEW, TEXAS 75601

History

#	Date	Description

REGISTERED LANDSCAPE ARCHITECT STEPHEN FUGATE 1127 STATE OF TEXAS

08.19.2020

OVERALL SITE PLAN

ISSUE FOR CONSTRUCTION

21719
08/19/20

L2.01

© 2019 Brinkley Sargent Wigginton Architects, Inc.

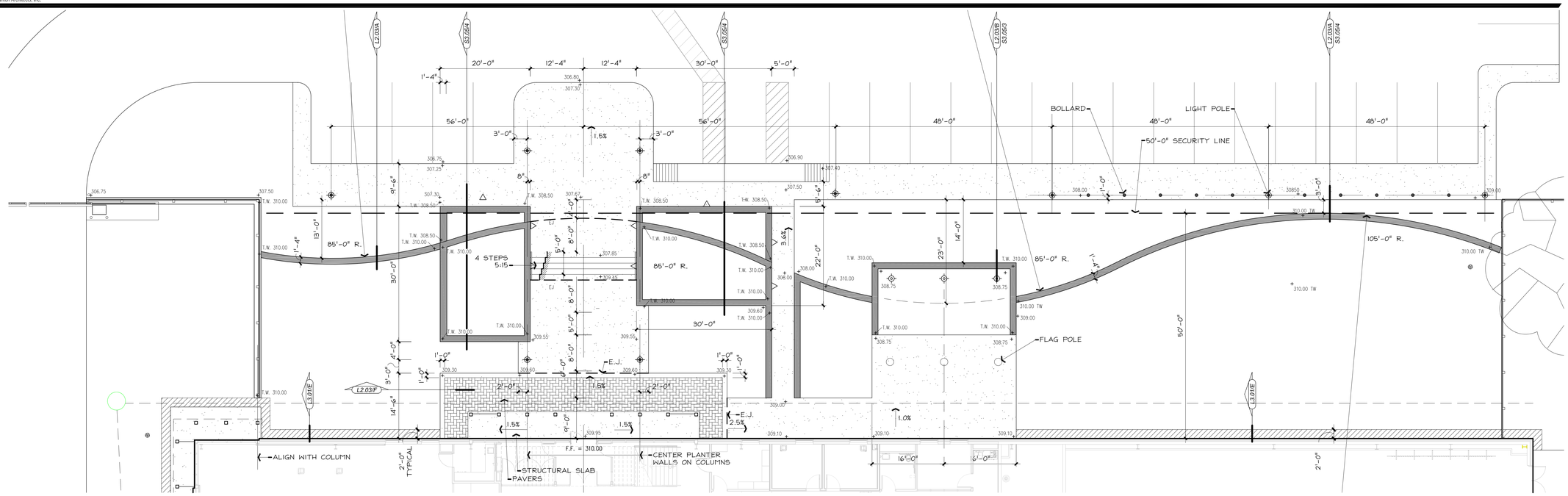

A ENLARGED MAIN ENTRY PAVING PLAN

1" = 10'-0"

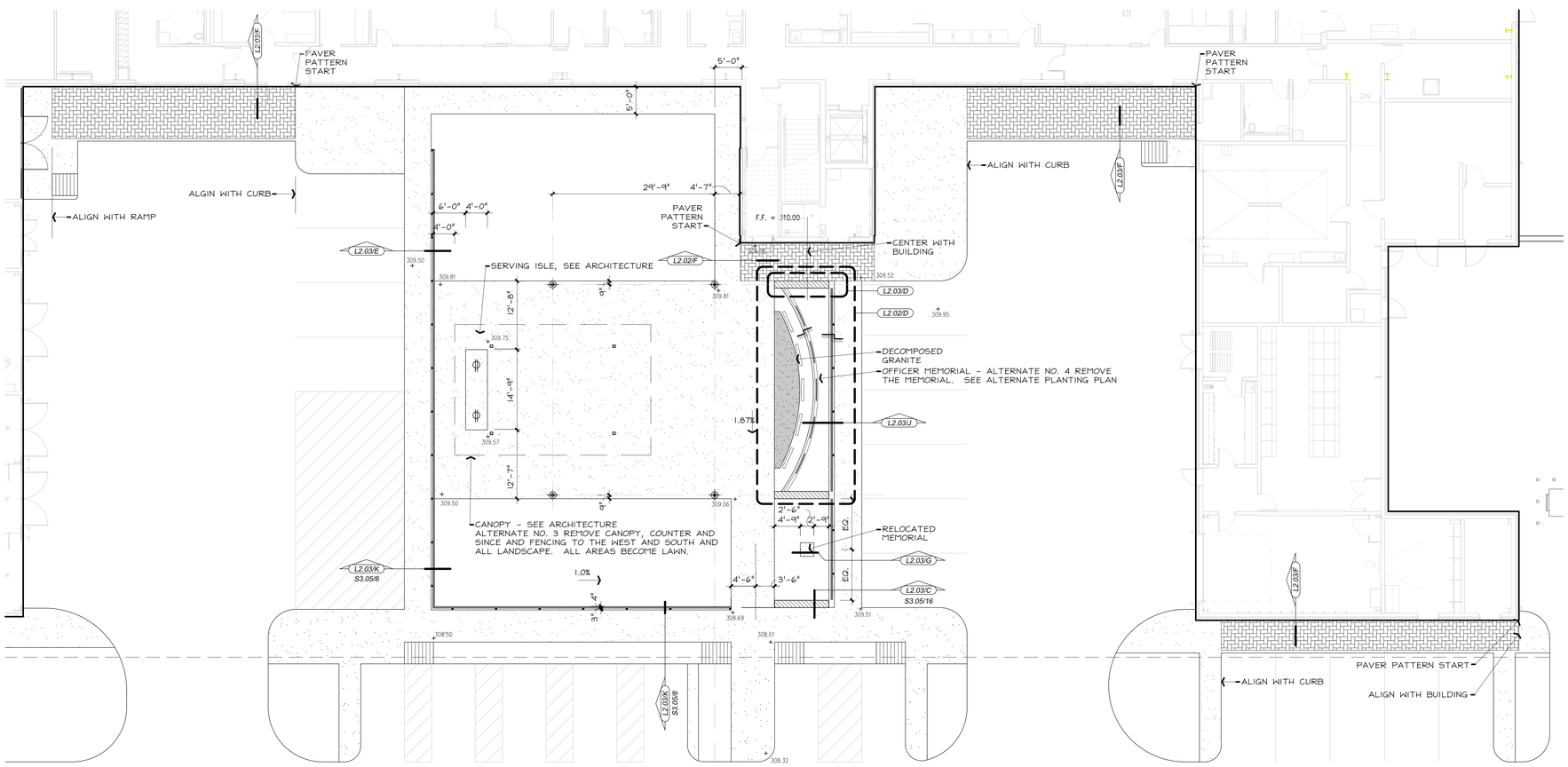

B ENLARGED STAFF ENTRY PAVING PLAN

1" = 10'-0"

C LEGEND

- PLANTER WALL
- BLUE WALL
- CONCRETE PAVING
- PAVERS
- DECORATIVE LIGHT POLE
- BOLLARD

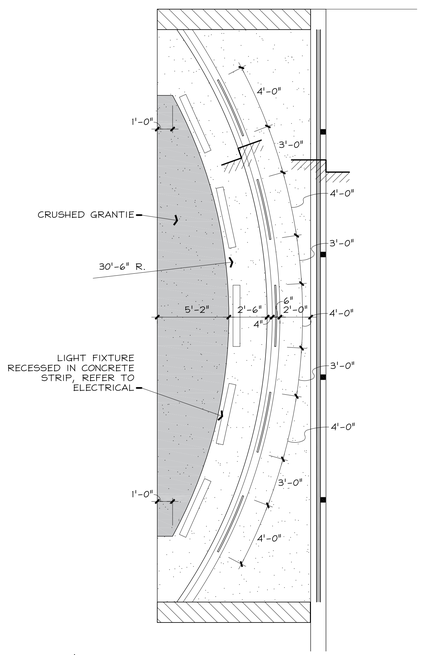

D ENLARGED OFFICER MEMORIAL PLAN

1/4" = 1'-0"

Architect: Brinkley Sargent Wigginton Architects (972) 960-9970
Landscape: Kendall Landscape Architecture (214) 739-3226
Structural: L.A. Fuess Partners, Inc (214) 593-1118
MEP: M-E Engineers (214) 741-1589
Civil: KSA Engineers, Inc (903) 236-7700
Technology: M-E Engineers (303) 421-6656

BRINKLEY SARGENT WIGINTON ARCHITECTS

LONGVIEW POLICE DEPARTMENT

XXXX SOUTH ST. LONGVIEW, TEXAS 75601

History

#	Date	Description

REGISTERED LANDSCAPE ARCHITECT STEPHEN J. KENDALL 1121 STATE OF TEXAS

08.19.2020

ENLARGED SITE PLANS AND DETAILS

21719
08/19/20
L2.02

ISSUE FOR CONSTRUCTION

© 2019 Brinkley Sargent Wigginton Architects, Inc.

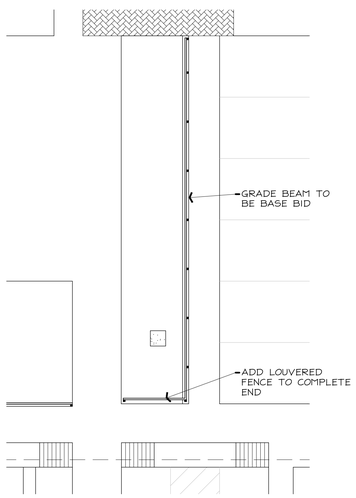

K | ALTERNATE NO. 4 LAYOUT PLAN
1" = 10'-0"

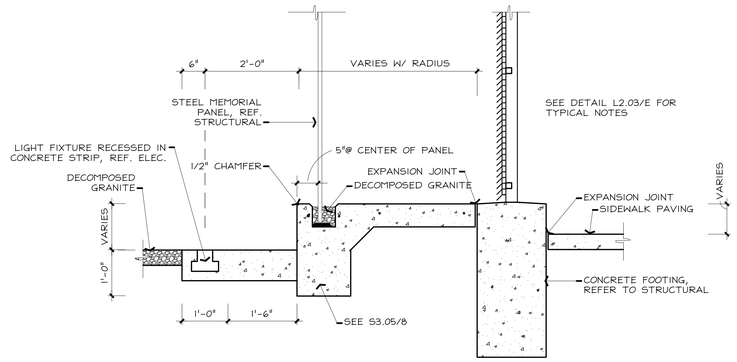

J | MEMORIAL PAVING SECTION
3/4" = 1'-0"

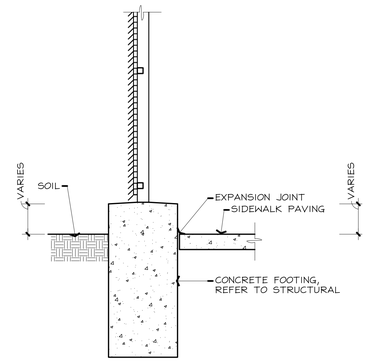

K | MEMORIAL FENCE SCREEN RAISED FOOTER
3/4" = 1'-0"

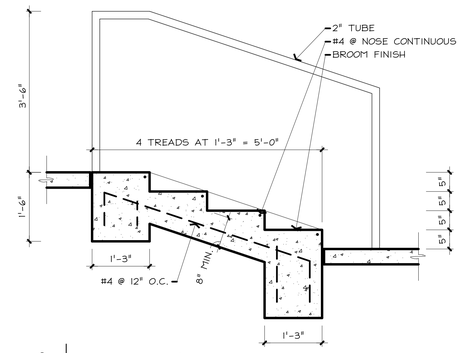

I | STAIR SECTION 5:15
3/4" = 1'-0"

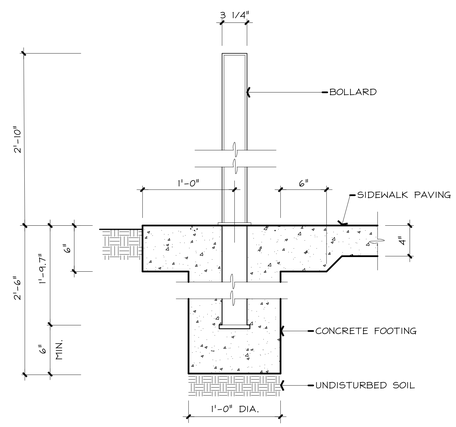

H | HESS TORO BOLLARD SECTION
1 1/2" = 1'-0"

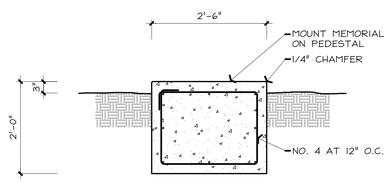

G | MEMORIAL PEDESTAL
3/4" = 1'-0"

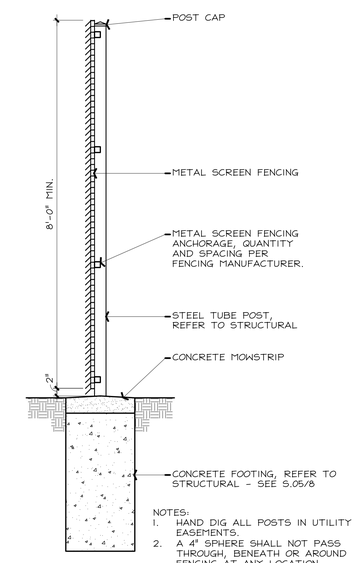

NOTES:
1. HAND DIG ALL POSTS IN UTILITY EASEMENTS.
2. A 4" SPHERE SHALL NOT PASS THROUGH, BENEATH OR AROUND FENCING AT ANY LOCATION.

E | METAL SCREEN FENCE
3/4" = 1'-0"

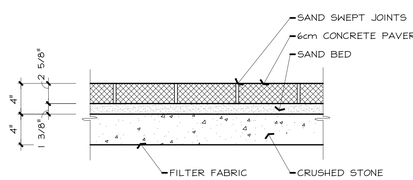

F | CONCRETE PAVER ON SAND SECTION - 6cm
1 1/2" = 1'-0"

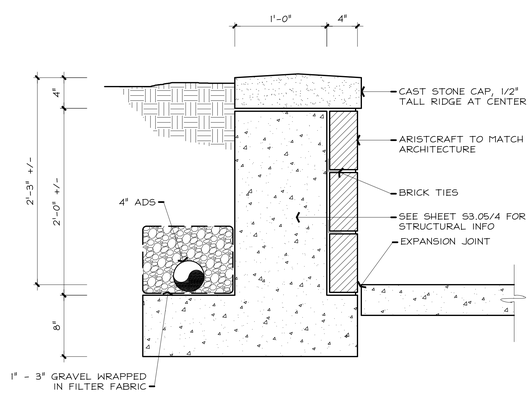

A | PLANTER WALL - SECTION
1 1/2" = 1'-0"

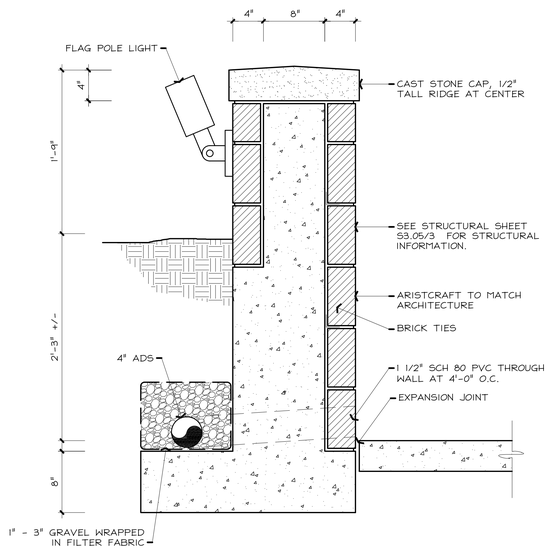

B | FLAG POLE LIGHT WALL - SECTION
1 1/2" = 1'-0"

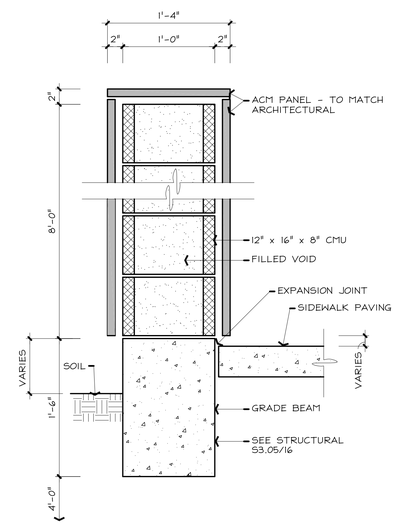

C | BLUE WALL - SECTION
1 1/2" = 1'-0"

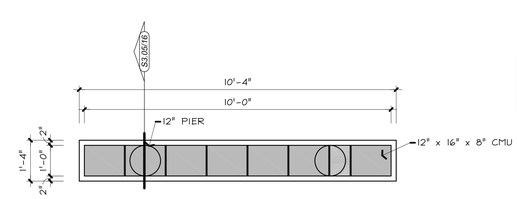

D | BLUE WALL - PLAN
1/2" = 1'-0"

LONGVIEW POLICE DEPARTMENT

XXXX SOUTH ST. LONGVIEW, TEXAS 75601

BRINKLEY SARGENT WIGINTON ARCHITECTS

Architect: Brinkley Sargent Wigginton Architects (972) 960-9970
Landscape: Kendall Landscape Architecture (214) 739-3226
Structural: L.A. Fuess Partners, Inc (214) 593-1118
MEP: M-E Engineers (214) 741-1589
Civil: KSA Engineers, Inc (903) 236-7700
Technology: M-E Engineers (303) 421-6656

History

#	Date	Description

REGISTERED LANDSCAPE ARCHITECT STEPHEN J. SCHMITZ 1127 STATE OF TEXAS
08.19.2020

DETAILS

ISSUE FOR CONSTRUCTION

21719
08/19/20

L2.03

© 2019 Brinkley Sargent Wigginton Architects, Inc.

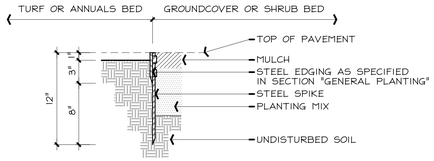

B STEEL EDGING - SECTION

1 1/2" = 1'-0"

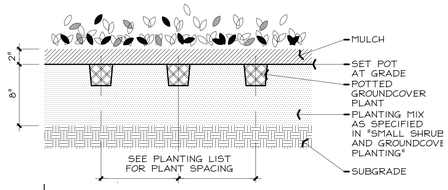

C GROUNDCOVER PLANTING - SECTION

1 1/2" = 1'-0"

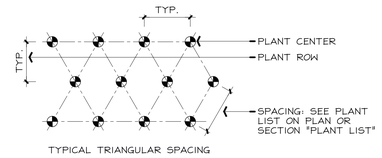

D PLANT SPACING - PLAN

1/2" = 1'-0"

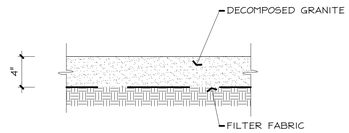

E DECOMPOSED GRANITE PAVING SECTION

1 1/2" = 1'-0"

J LANDSCAPE LEGEND

- SOLID SOD BERMUDA
- SEEDED BERMUDA ALTERNATE NO. 2 - CHANGE TO SOLID SOD

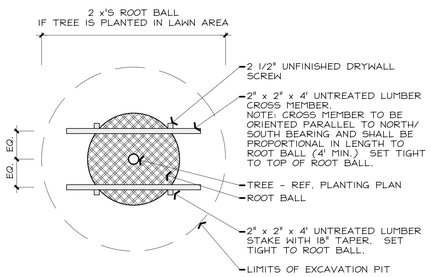

F TYPICAL TREE STAKING - PLAN

1/2" = 1'-0"

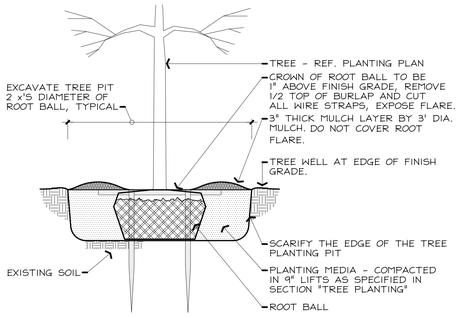

G TREE PLANTING IN LAWN - SECTION

1/2" = 1'-0"

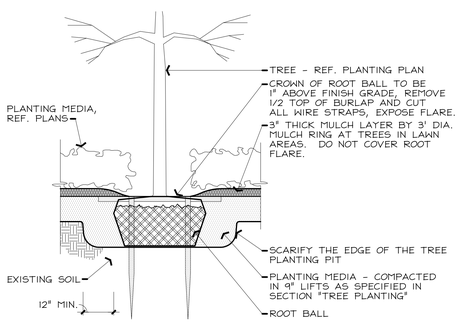

H TREE PLANTING IN PLANTER - SECTION

1/2" = 1'-0"

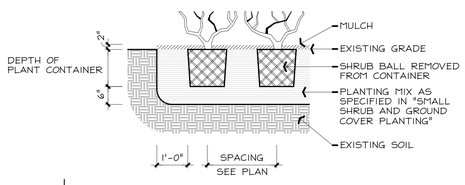

I SHRUB PLANTING - SECTION

1/2" = 1'-0"

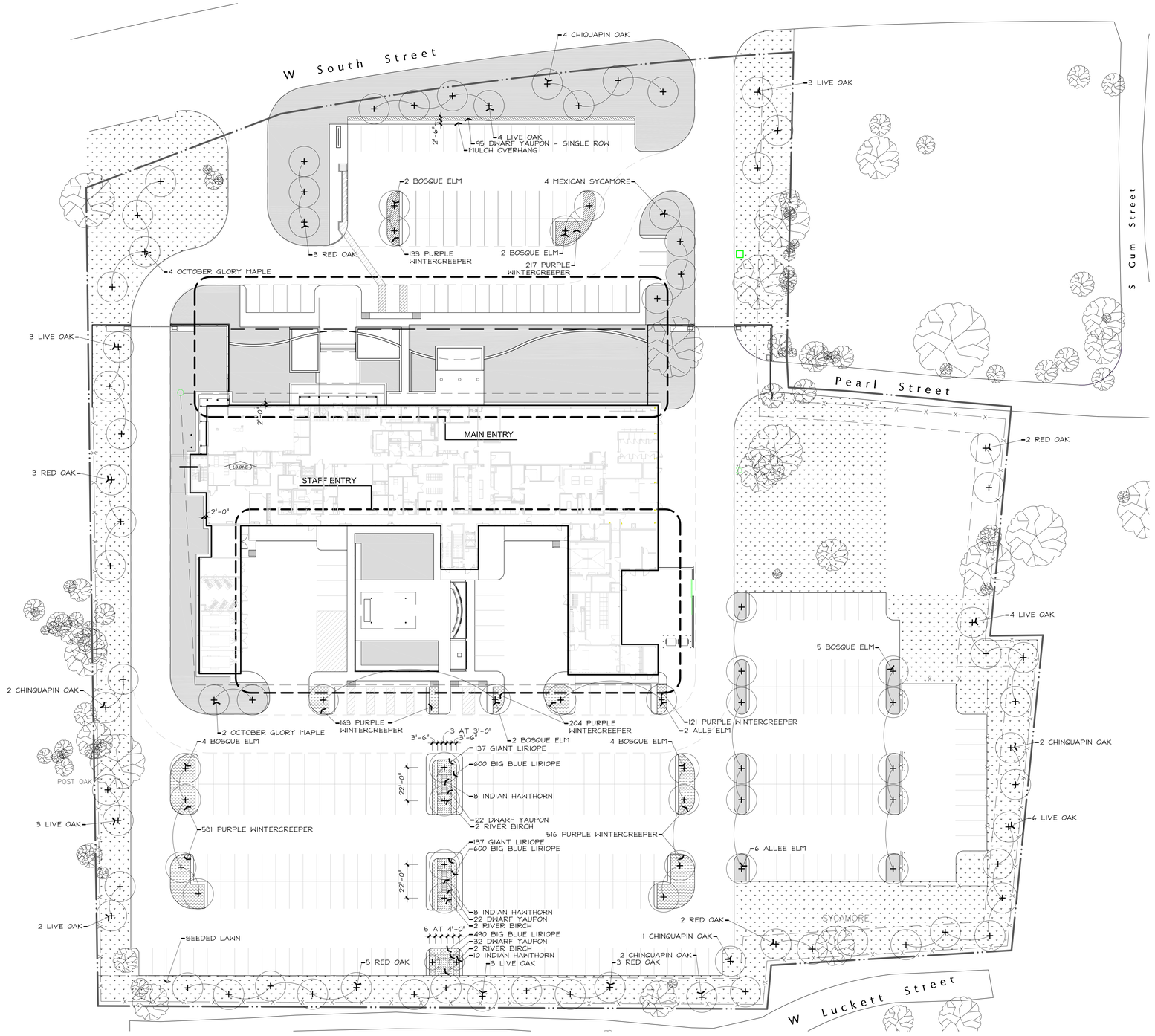

A OVERALL LANDSCAPE PLAN

1" = 30'-0"

0 15' 30' 60'

BRINKLEY SARGENT WIGINTON ARCHITECTS

Architect: Brinkley Sargent Wigginton Architects (972) 960-9970
Landscape: Kendall Landscape Architecture (214) 739-3226
Structural: L.A. Fuess Partners, Inc (214) 593-1118
MEP: M-E Engineers (214) 741-1589
Civil: KSA Engineers, Inc (903) 236-7700
Technology: M-E Engineers (303) 421-6656

LONGVIEW POLICE DEPARTMENT

XXXX SOUTH ST. LONGVIEW, TEXAS 75601

History

#	Date	Description

REGISTERED LANDSCAPE ARCHITECT STEPHEN M. KENDALL 1121 STATE OF TEXAS

08.19.2020

OVERALL LANDSCAPE PLAN AND DETAILS

ISSUE FOR CONSTRUCTION

21719
08/19/20

L3.01

© 2019 Brinkley Sargent Wigginton Architects, Inc.

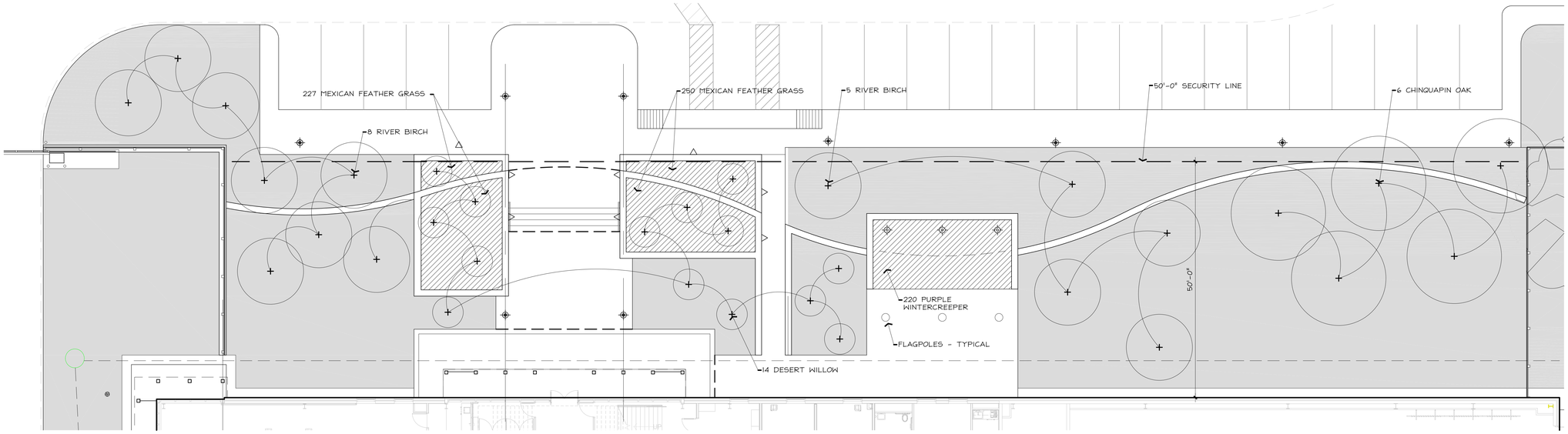

A ENLARGED MAIN ENTRY LANDSCAPE PLAN

1" = 10'-0" 0 5' 10' 20'

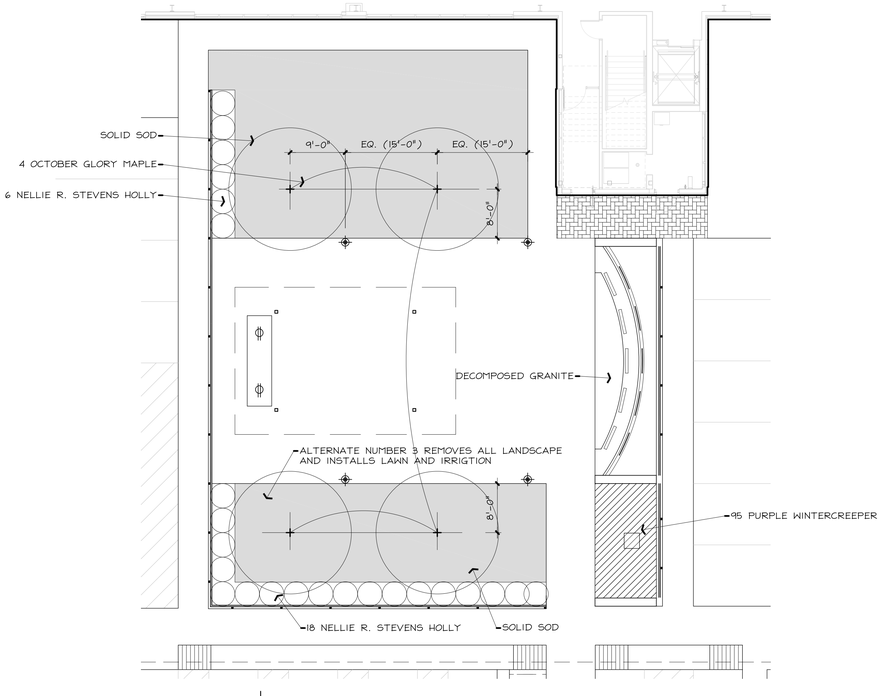

B ENLARGED STAFF ENTRY LANDSCAPE PLAN

1" = 10'-0" 0 5' 10' 20'

C PLANT LISTING

ALL SIZES SHOWN ARE MINIMUM. SMALLER CONTAINERS MEETING THE SPECIFIED HEIGHT AND SPREAD WILL NOT BE ACCEPTED.

BOTANIC NAME	COMMON NAME	SIZE	DESCRIPTION	QUANTITY
LARGE TREES				
ACER RUBRUM 'OCTOBER GLORY'	OCTOBER GLORY MAPLE	65 GALLON CONTAINER, 3"-3 1/2" CALIPER, 8' - 9' HEIGHT, 4'-5' SPREAD	SINGLE STRAIGHT LEADER	10
QUERCUS MUEHLENBERGII	CHINQUAPIN OAK	100 GALLON CONTAINER, 4"-4 1/2" CALIPER, 8' - 9' HEIGHT, 4'-5' SPREAD	SINGLE STRAIGHT LEADER	17
QUERCUS SHUMARDII	SHUMARD RED OAK	100 GALLON CONTAINER, 4"-4 1/2" CALIPER, 9' - 10' HEIGHT, 5'-6' SPREAD	SINGLE STRAIGHT LEADER.	18
QUERCUS VIRGINIANA	SOUTHERN LIVE OAK	100 GALLON CONTAINER, 4"-4 1/2" CALIPER, 9' - 10' HEIGHT, 5'-6' SPREAD	SINGLE STRAIGHT LEADER.	28
BETULA NIGRA	RIVER BIRCH	65 GALLON CONTAINER, 4"-4 1/2" CALIPER, 9' - 10' HEIGHT, 5'-6' SPREAD	MULTI-TRUNK	19
ULMUS PARVIFOLIA 'EMER II'	ALLE ELM	100 GALLON CONTAINER, 4"-4 1/2" CALIPER, 9' - 10' HEIGHT, 5'-6' SPREAD	SINGLE STRAIGHT LEADER.	8
ULMUS PARVIFOLIA 'BOSQUE'	BOSQUE ELM	100 GALLON CONTAINER, 4"-4 1/2" CALIPER, 9' - 10' HEIGHT, 5'-6' SPREAD	SINGLE STRAIGHT LEADER.	19
PLATANUS MEXICANA	MEXICAN SYCAMORE	100 GALLON CONTAINER, 4"-4 1/2" CALIPER, 9' - 10' HEIGHT, 5'-6' SPREAD	SINGLE STRAIGHT LEADER.	4
ORNAMENTAL TREES				
CHILOPSIS LINEARIS	DESERT WILLOW	100 GALLON CONTAINER, 5"-5 1/2" CALIPER, 9' - 10' HEIGHT, 7'-8' SPREAD	MULTI-TRUNK - 3 CANES MAXIMUM	14
SHRUBS				
ILEX VOMITORIA 'NANA'	DWARF YAUPON HOLLY	3 GALLON	24" ON CENTER	171
RAPHIOLEPIS INDICA 'BALLERINA'	BALLERINA INDIAN HAWTHORN	3 GALLON	30" ON CENTER	26
ILEX X NELLIE R. STEVENS	NELLIE R. STEVENS HOLLY	30 GALLON	42" ON CENTER	24
GROUNDCOVER				
EUONYMUS FORTUNEI 'COLORATUS'	PURPLE WINTERCREEPER	1 GALLON	18" ON CENTER	2,250
LIRIOPE MUSCARI 'BIG BLUE'	BIG BLUE LIRIOPE	4" POT	8" ON CENTER	1,690
LIRIOPE MUSCARI 'GIANT'	GIANT LIRIOPE	1 GALLON	15" ON CENTER	274
PERENNIALS				
NASELLA TENUISSIMA	MEXICAN FEATHER GRASS	1 GALLON	18" ON CENTER	477
LAWN				
CYNDON SPP.	BERMUDA GRASS - SOLID SOD AND SEEDING - SEE LEGEND			

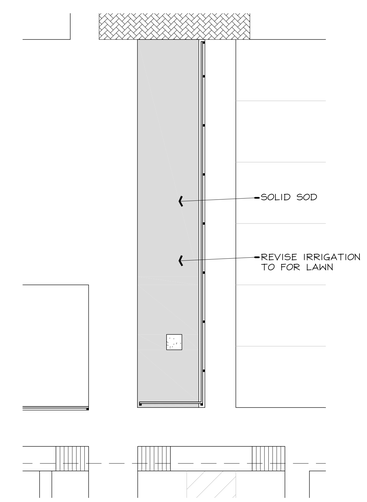

D ALTERNATE NO. 4 PLANTING PLAN

1" = 10'-0" 0 5' 10' 20'

BRINKLEY SARGENT WIGINTON ARCHITECTS

Architect: Brinkley Sargent Wigginton Architects (972) 960-9970
Landscape: Kendall Landscape Architecture (214) 739-3226
Structural: L.A. Fuess Partners, Inc (214) 593-1118
MEP: M-E Engineers (214) 741-1589
Civil: KSA Engineers, Inc (903) 236-7700
Technology: M-E Engineers (303) 421-6656

LONGVIEW POLICE DEPARTMENT

XXXX SOUTH ST. LONGVIEW, TEXAS 75601

History

#	Date	Description

ENLARGED LANDSCAPE PLANS AND PLANT LIST

ISSUE FOR CONSTRUCTION

21719
08/19/20

L3.02

© 2020 Brinkley Sargent Wigginton Architects, Inc.

B | IRRIGATION LEGEND

- HUNTER PROS-06-NSI-PRS30 SERIES POP UP SPRAY HEADS WITH HUNTER MSBN-50H STREAM BUBBLER NOZZLES. (TWO PER TREE)
  SEE INSTALLATION NOTE #13 REGARDING TREE BUBBLER LATERAL PIPE
- HUNTER PROS-04-PRS30 SERIES POP UP SPRAY HEAD WITH SS / ES SERIES STRIP NOZZLE UNLESS NOTED OTHERWISE.
- HUNTER PROS-04-PRS30 SERIES POP UP SPRAY HEAD WITH PRO SPRAY SERIES NOZZLE AS NOTED BELOW
- NETAFIM TECHLINE TLHCVXR5-12 SERIES DRIP TUBE IN SHRUB BED INSTALLED AT 2" DEPTH
  SEE INSTALLATION NOTE #16 REGARDING DRIP TUBE LAYOUT IN SHRUB BEDS.
- HUNTER PGP ULTRA, ADJUSTABLE ARC 12" POP UP ROTARY HEAD, PART CIRCLE, #1.55R BLACK NOZZLE UNLESS NOTED OTHERWISE
- HUNTER PGP ULTRA, ADJUSTABLE ARC 4" POP UP ROTARY HEAD, PART CIRCLE, #3.0 BLUE NOZZLE UNLESS NOTED OTHERWISE
- HUNTER PGP ULTRA, ADJUSTABLE ARC 4" POP UP ROTARY HEAD, PART CIRCLE, #4.0 BLUE NOZZLE UNLESS NOTED OTHERWISE
- HUNTER PGP ULTRA, ADJUSTABLE ARC 4" POP UP ROTARY HEAD, FULL CIRCLE, #8.0 BLUE NOZZLE UNLESS NOTED OTHERWISE
- HUNTER ICV SERIES ELECTRIC REMOTE CONTROL VALVE
- HUNTER ICV SERIES ELECTRIC REMOTE CONTROL, "TREE BUBBLER ZONE" VALVE
  SEE INSTALLATION NOTE #13 REGARDING TREE BUBBLER LATERAL PIPE
- NETAFIM LVCZ SERIES DRIP VALVE ASSEMBLY WITH PSI REGULATOR AND 140 MESH FILTER
  USE MODEL LVCZS80100075-LF FOR DRIP ZONES WITH .25 TO 4.4 GPM FLOW RATE
  USE MODEL LVCZ100075-HFHP FOR DRIP ZONES WITH 4.5 TO 17.6 GPM FLOW RATE
  USE MODEL LVCZ-150HP FOR DRIP ZONES WITH 11 TO 35 GPM FLOW RATE
- HUNTER HQ-33-LRC-R QUICK COUPLING VALVE WITH LOCKING PURPLE COVER AND 3/4" PVC BALL VALVE
- LASCO "V101N" SERIES SCH. 80 PVC TRUE UNION BALL VALVE, MAINLINE SIZE
- WILKINS 375-B SERIES REDUCED PRESSURE TYPE BACKFLOW PREVENTOR INSTALLED PER CITY CODE
- IRRIGATION WATER METER AND TAP, SIZE AS NOTED ON THE PLAN
- HUNTER I2C-800-M SERIES AUTOMATIC CONTROLLER WITH (1) ICM-2200 EXPANSION MODULE AND
  'WSS-SEN' WIRELESS ET SENSOR. LOCATE SENSOR AS FIELD DIRECTED BY THE LANDSCAPE ARCHITECT
- HUNTER ICV-151 ELECTRIC REMOTE CONTROL VALVE WITH HUNTER AS-ADJ 'ACCU SYNC' PRESSURE REGULATOR
- SCH 40 PVC MAINLINE PIPE
- CLASS 200 (EXCEPT 1/2 INCH #315) PVC LATERAL PIPE
- ONE 4" CLASS 200 SLEEVE PIPE
- TWO 4" CLASS 200 SLEEVE PIPES

L.I.C. SHALL SELECT PRO-SPRAY SPRAY NOZZLES FOR "HEAD-TO-HEAD" COVERAGE, ADJUSTED FOR NO OVERSPRAY ONTO WALLS AND WALKS. NO OVERSPRAY INTO STREETS IS PERMITTED.

C | COORDINATION WITH EXISTING TREES

NO MACHINE TRENCHING SHALL BE PERMITTED WITHIN THE ROOT ZONE OF EXISTING TREES. HAND-DIG ONLY, WITHIN THE ROOT ZONES OF EXISTING TREES. NO ROOTS OVER 1" DIAMETER SHALL BE CUT. STAKE ALL PROPOSED TRENCH ROUTES NEAR EXISTING TREES FOR APPROVAL BY THE LANDSCAPE ARCHITECT BEFORE DIGGING BEGINS.

James Pole
IRRIGATION CONSULTANTS
IRRIGATION DESIGN, CONSULTING, AND LANDSCAPE WATER MANAGEMENT
TEXAS L.I.C. #658
100 N. LOCUST ST., SUITE 3
DENTON, TEXAS 76201
PHONE: 940.243.2364
FAX: 940.382.2475
james@jamespoleirrigation.com

EPA WaterSense PARTNER

IRRIGATION IN TEXAS IS REGULATED BY THE TEXAS COMMISSION ON ENVIRONMENTAL QUALITY (TCEQ) (MC-178) P.O. BOX 13087 T.C.E.Q.'S WEB SITE IS: WWW.TCEQ.STATE.TX.US

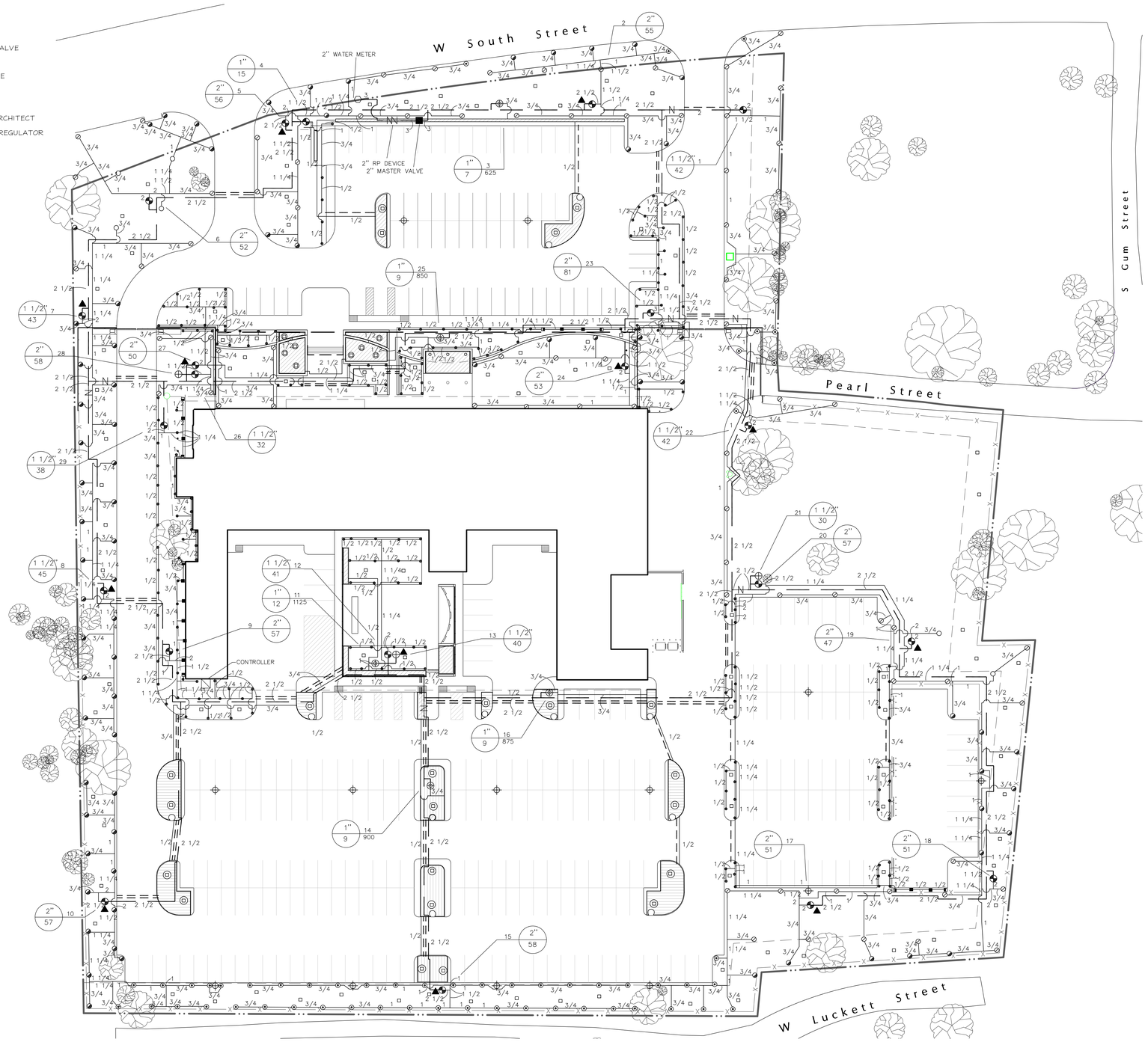

A | OVERALL IRRIGATION PLAN

1" = 30'-0" 0 15' 30' 60'

Architect: Brinkley Sargent Wigginton Architects (972) 960-9970
Landscape: Kendall Landscape Architecture (214) 739-3226
Structural: L.A. Fuess Partners, Inc (214) 593-1118
MEP: M-E Engineers (214) 741-1589
Civil: KSA Engineers, Inc (903) 236-7700
Technology: M-E Engineers (303) 421-6656

BRINKLEY SARGENT WIGINTON ARCHITECTS

LONGVIEW POLICE DEPARTMENT

XXXX SOUTH ST. LONGVIEW, TEXAS 75601

History

#	Date	Description

STATE OF TEXAS
JAMES POLE
658
LICENSED IRRIGATOR
08.19.2020

OVERALL IRRIGATION PLAN

ISSUE FOR CONSTRUCTION

21719
08/19/20

L4.01

© 2020 Brinkley Sargent Wigginton Architects, Inc.

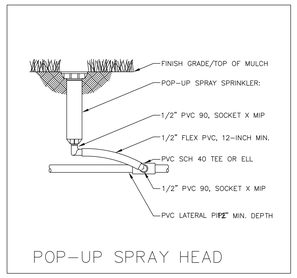

POP-UP SPRAY HEAD

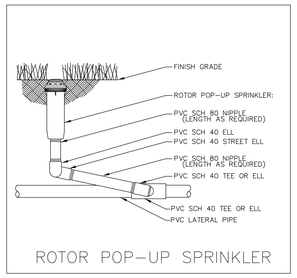

ROTOR POP-UP SPRINKLER

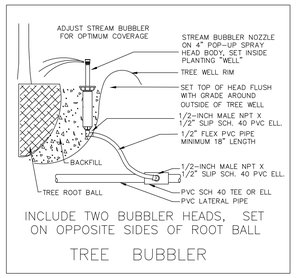

INCLUDE TWO BUBBLER HEADS, SET ON OPPOSITE SIDES OF ROOT BALL

TREE BUBBLER

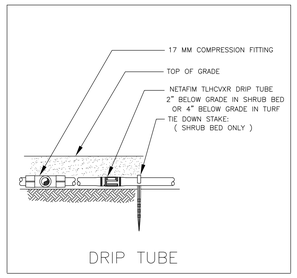

DRIP TUBE

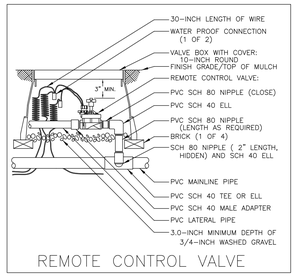

REMOTE CONTROL VALVE

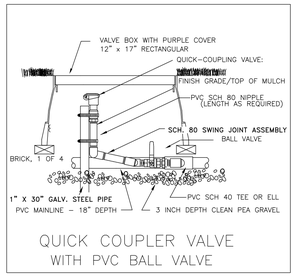

QUICK COUPLER VALVE
WITH PVC BALL VALVE

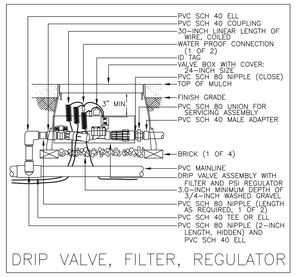

DRIP VALVE, FILTER, REGULATOR

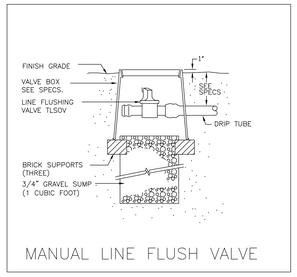

MANUAL LINE FLUSH VALVE

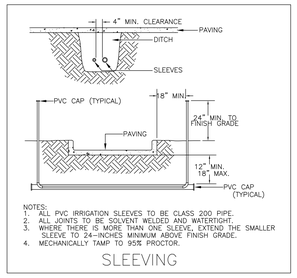

NOTES:
1. ALL PVC IRRIGATION SLEEVES TO BE CLASS 200 PIPE.
2. ALL JOINTS TO BE SOLVENT WELDED AND WATERTIGHT.
3. WHERE THERE IS MORE THAN ONE SLEEVE, EXTEND THE SMALLER SLEEVE TO 24-INCHES MINIMUM ABOVE FINISH GRADE.
4. MECHANICALLY TAMP TO 95% PROCTOR.

SLEEVING

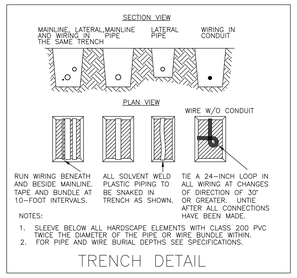

NOTES:
1. SLEEVE BELOW ALL HARDSCAPE ELEMENTS WITH CLASS 200 PVC TWICE THE DIAMETER OF THE PIPE OR WIRE BUNDLE WITHIN.
2. FOR PIPE AND WIRE BURIAL DEPTHS SEE SPECIFICATIONS.

TRENCH DETAIL

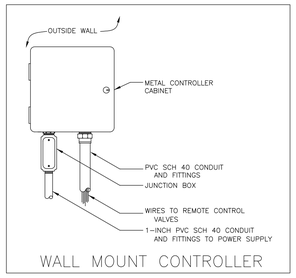

WALL MOUNT CONTROLLER

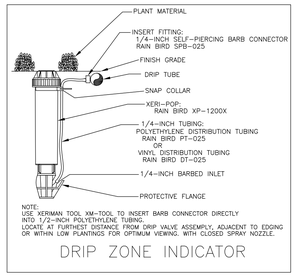

NOTE:
USE XERIMAN TOOL XM-TOOL TO INSERT BARB CONNECTOR DIRECTLY INTO 1/2-INCH POLYETHYLENE TUBING.
LOCATE AT FURTHEST DISTANCE FROM DRIP VALVE ASSEMPLY, ADJACENT TO EDGING OR WITHIN LOW PLANTINGS FOR OPTIMUM VIEWING. WITH CLOSED SPRAY NOZZLE.

DRIP ZONE INDICATOR

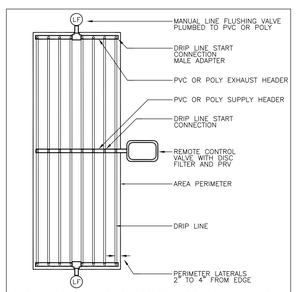

SUPPLY AND EXHAUST HEADERS SHALL BE CLASS 200 PVC PIPE, OF THE SAME DIAMETER AS THE ZONE VALVE SIZE.

USE DRIP TUBE FOR SUPPLY AND EXHAUST HEADERS ON GRIDS WITH FLOW SMALLER THAN 5 GPM ONLY.

DRIP CENTER FEED LAYOUT

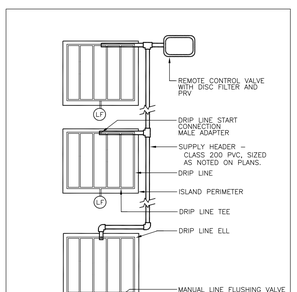

USE DRIP TUBE FOR SUPPLY AND EXHAUST HEADERS ON GRIDS WITH FLOW SMALLER THAN 5 GPM ONLY.

DRIP ISLAND LAYOUT

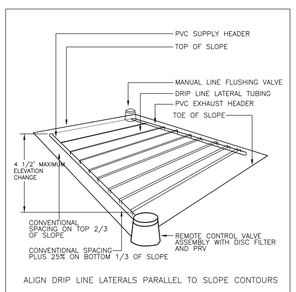

ALIGN DRIP LINE LATERALS PARALLEL TO SLOPE CONTOURS

SUPPLY AND EXHAUST HEADERS SHALL BE CLASS 200 PVC PIPE, OF THE SAME DIAMETER AS THE ZONE VALVE SIZE.

USE DRIP TUBE FOR SUPPLY AND EXHAUST HEADERS ON GRIDS WITH FLOW SMALLER THAN 5 GPM ONLY.

DRIP SLOPE FEED LAYOUT

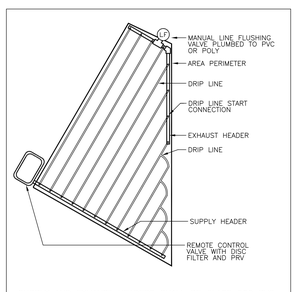

SUPPLY AND EXHAUST HEADERS SHALL BE CLASS 200 PVC PIPE, OF THE SAME DIAMETER AS THE ZONE VALVE SIZE.

USE DRIP TUBE FOR SUPPLY AND EXHAUST HEADERS ON GRIDS WITH FLOW SMALLER THAN 5 GPM ONLY.

IRREGULAR AREA DRIP LAYOUT

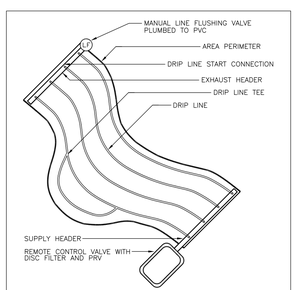

SUPPLY AND EXHAUST HEADERS SHALL BE CLASS 200 PVC PIPE, OF THE SAME DIAMETER AS THE ZONE VALVE SIZE.

USE DRIP TUBE FOR SUPPLY AND EXHAUST HEADERS ON GRIDS WITH FLOW SMALLER THAN 5 GPM ONLY.

CURVED AREA DRIP LAYOUT

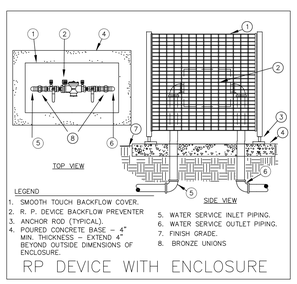

RP DEVICE WITH ENCLOSURE

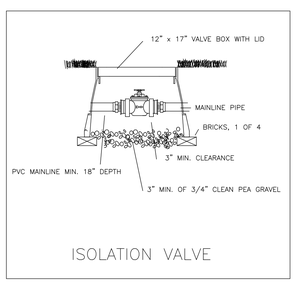

ISOLATION VALVE

MINIMUM STATIC PRESSURE : 100 PSI
DESIGN PRESSURE : 75 PSI

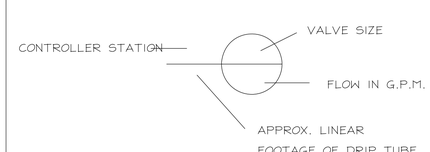

INSTALLATION NOTES

1. SEE SECTION 32 80 01 - IRRIGATION SYSTEM FOR DESCRIPTION AND PRODUCT INFORMATION.
2. SEE PAVING DRAWING FOR SLEEVING AND METER LOCATION.
3. IRRIGATION COVERAGE SHALL BE 100% IN THE AREAS TO BE IRRIGATED. THE IRRIGATION CONTRACTOR SHALL MAKE MINOR ADJUSTMENTS TO ENSURE PROPER COVERAGE AT NO ADDITIONAL COST TO THE OWNER.
4. NO IRRIGATION HEAD OR VALVE SHALL BE WITHIN THREE (3') FEET OF A WATER UTILITY.
5. ALL MAINLINE THREE (3') FEET FROM BACK OF THE CURB OR PAVING (EXCEPT FOR MAJOR INTERSECTIONS) UNLESS NOTED.
6. OVER SPRAY WITHIN THE RIGHT-OF-WAY IS PROHIBITED.
7. ALL PIPING SHALL BE FLUSHED OF ALL DEBRIS PRIOR TO INSTALLING HEADS AND NOZZLES.
8. NO WIRE SPLICES WILL BE ALLOWED BETWEEN THE CONTROLLER AND THE SOLENOID VALVES. THE VALVE "COMMON" WIRE SHALL BE SPLICED ONLY AT THE SOLENOID VALVE AND WITHIN THE VALVE BOXES.
9. CONTRACTOR TO ARRANGE VALVE BOXES IN A STRAIGHT LINE AND EVENLY SPACED AND AT NO TIME CLOSER THAN 3" FROM ANY HARDSCAPE. SEE DETAILS.
10. THE IRRIGATION CONTRACTOR SHALL COMPLY WITH ALL LOCAL AND STATE MANDATED IRRIGATION ORDINANCES AND CODES, AND WILL SECURE ALL REQUIRED PERMITS. L.I.C. SHALL PAY ANY ASSOCIATED FEES UNLESS OTHERWISE NOTED. ALL LOCAL CODES SHALL PREVAIL OVER ANY DISCREPANCIES HEREIN AND SHALL BE ADDRESSED BEFORE ANY CONSTRUCTION BEGINS.
11. CONFIRM MINIMUM STATIC WATER PRESSURE OF 100 PSI AT THE HIGHEST ELEVATION OF THE SYSTEM LIMITS, AND MAXIMUM STATIC WATER PRESSURE OF 120 PSI AT THE LOWEST ELEVATION OF THE SYSTEM LIMITS AT LEAST 7 DAYS BEFORE BEGINNING WORK. IF STATIC WATER PRESSURE IS OUTSIDE THE RANGE STATED ABOVE, DO NOT PROCEED UNTIL DIRECTED BY THE LANDSCAPE ARCHITECT
12. ELECTRIC POWER SHALL BE PROVIDED WITHIN FIVE FEET OF THE CONTROLLER LOCATION BY GENERAL CONTRACTOR. L.I.C. TO PROVIDE FINAL HARD-WIRE TO THE CONTROLLER.
13. 24 VOLT VALVE WIRE SHALL BE A MINIMUM OF #14 GUAGE, U.F. APPROVED FOR DIRECT BURIAL, SINGLE CONDUCTOR "IRRIGATION WIRE." WIRE SPLICES SHALL INCLUDE DBY CONNECTORS AS MANUFACTURED BY 3M COMPANY, ALL FIELD SPLICES SHALL BE LOCATED IN A ROUND VALVE BOX OF SUFFICIENT SIZE TO ALLOW INSPECTION.
14. CONTRACTOR IS TO CONTACT APPROPRIATE AUTHORITIES AND LOCATE ALL UTILITIES PRIOR TO CONSTRUCTION.
15. LATERAL PIPE TO TREE BUBBLERS IS OMITTED FOR GRAPHIC CLARITY ONLY. CONNECT TREE BUBBLERS TO VALVES AS SHOWN WITH CLASS 200 PVC PIPE SIZED TO ALLOW A MAXIMUM FLOW VELOCITY OF 5 FEET PER SECOND.
16. THE PROPOSED LOCATIONS OF ALL ABOVE-GROUND EQUIPMENT INCLUDING BACKFLOW PREVENTORS, CONTROLLERS, AND WEATHER SENSORS SHALL BE STAKED BY THE CONTRACTOR FOR APPROVAL BY THE LANDSCAPE ARCHITECT OR OWNER'S REPRESENTATIVE BEFORE THESE ITEMS ARE INSTALLED.
17. ALL HEADS SHALL BE INSTALLED A MINIMUM OF 4" FROM PAVEMENT EDGES. (6" OR GREATER WHERE REQUIRED BY LOCAL CODE) FINAL HEAD ADJUSTMENTS BY THE CONTRACTOR SHALL INCLUDE THE ADDITION OF CHECK VALVES WHERE NEEDED TO PREVENT EXCESSIVE LOW HEAD DRAINAGE. THE CONTRACTOR SHALL BUDGET FOR, AND INSTALL CHECK VALVES FOR UP TO 10% OF THE TOTAL NUMBER OF HEADS WHEN NEEDED, WITH NO ADDITIONAL COST TO THE OWNER.
16. WHERE SHOWN ON THE PLANS, MASS SHRUB / GROUNDCOVER BEDS SHALL INCLUDE NETAFIM TECHLINE TLHCVXR SERIES DRIP TUBE WITH PRE-INSTALLED .55 GPH DRIP EMITTERS AT 12" INTERVALS (TLHCVXR5-12), INSTALLED IN CENTER-FED GRIDS WITH ROWS SPACED 18" APART. INDIVIDUAL DRIP TUBE RUNS SHALL NOT EXCEED 150 L.F. PVC LATERAL "TRUNK" LINES SHALL BE INSTALLED 10" DEEP. DRIP TUBE SHALL BE SET 2" BELOW FINISHED SOIL GRADE (NOT INCLUDING MULCH LAYER), SECURELY STAKED EVERY 18". NETAFIM #TL050MFV-1 FLUSH VALVES SHALL BE INSTALLED AT THE FARTHEST POINTS FROM THE ZONE VALVE. USE 17 MM BARBED FITTINGS FOR DRIP LINE CONNECTIONS, SET THE MAXIMUM OPERATING PRESSURE AT 30 PSI. TECHLINE HCVXR SHALL BE INSTALLED PERPENDICULAR TO SLOPE FACE. INSTALL TLCV IN-LINE CHECK VALVES FOR EVERY 8 FEET OF DRIP LINE ELEVATION CHANGE WITHIN THE ZONE. USE NETAFIM STAPLES (#TLS6) TO SECURE TUBING EVERY 18" EACH DRIP ZONE SHALL INCLUDE ONE MAINTENANCE "FLAG" WHICH SHALL CONSIST OF A 12" POP-UP SPRAY HEAD AND COMPLETELY CLOSED SPRAY NOZZLE. THE POP-UP HEAD SHALL BE CONNECTED TO THE DRIP ZONE PIPE, SET FLUSH WITH GRADE, AND LOCATED AT THE FARTHERST DISTANCE FROM THE DRIP VALVE ASSEMBLY. INSTALL THE "FLAG" HEAD ADJACENT TO EDGING OR IN LOW PLANTINGS FOR EASE OF VIEWING.
19. USE RIGID SCH. 80 PVC SWING JOINT ASSEMBLIES TO CONNECT ALL ROTARY HEADS AND QUICK COUPLERS.

COORDINATION WITH EXISTING TREES

NO MACHINE TRENCHING SHALL BE PERMITTED WITHIN THE ROOT ZONE OF EXISTING TREES. HAND-DIG ONLY WITHIN THE ROOT ZONES OF EXISTING TREES. NO ROOTS OVER 1" DIAMETER SHALL BE CUT. STAKE ALL PROPOSED TRENCH ROUTES NEAR EXISTING TREES FOR APPROVAL BY THE LANDSCAPE ARCHITECT BEFORE DIGGING BEGINS.

James Pole
IRRIGATION CONSULTANTS
IRRIGATION DESIGN, CONSULTING, AND LANDSCAPE WATER MANAGEMENT
TEXAS L.I.C. #658
100 N. LOCUST ST., SUITE 3
DENTON, TEXAS 76201
PHONE: 940.243.2364
FAX: 940.382.2475
james@jamespoleirrigation.com

EPA WaterSense PARTNER

IRRIGATION IN TEXAS IS REGULATED BY THE TEXAS COMMISSION ON ENVIRONMENTAL QUALITY (TCEQ) (MC-178) P.O. BOX 13087 T.C.E.Q.'S WEB SITE IS: WWW.TCEQ.STATE.TX.US

BRINKLEY SARGENT WIGINTON ARCHITECTS
Architect: Brinkley Sargent Wigginton Architects (972) 960-9970
Landscape: Kendall Landscape Architecture (214) 739-3226
Structural: L.A. Fuess Partners, Inc (214) 593-1118
MEP: M-E Engineers (214) 741-1589
Civil: KSA Engineers, Inc (903) 236-7700
Technology: M-E Engineers (303) 421-6656

LONGVIEW POLICE DEPARTMENT

XXXX SOUTH ST. LONGVIEW, TEXAS 75601

History

#	Date	Description

STATE OF TEXAS JAMES POLE 658 LICENSED IRRIGATOR
08.19.2020

IRRIGATION DETAILS

ISSUE FOR CONSTRUCTION

21719
08/19/20

L4.02